FORM NO. 3312-607

TORO®

MODEL NO. 16785-5000001 & UP

PARTS CATALOG

21" S.P. SIDE DISCHARGE

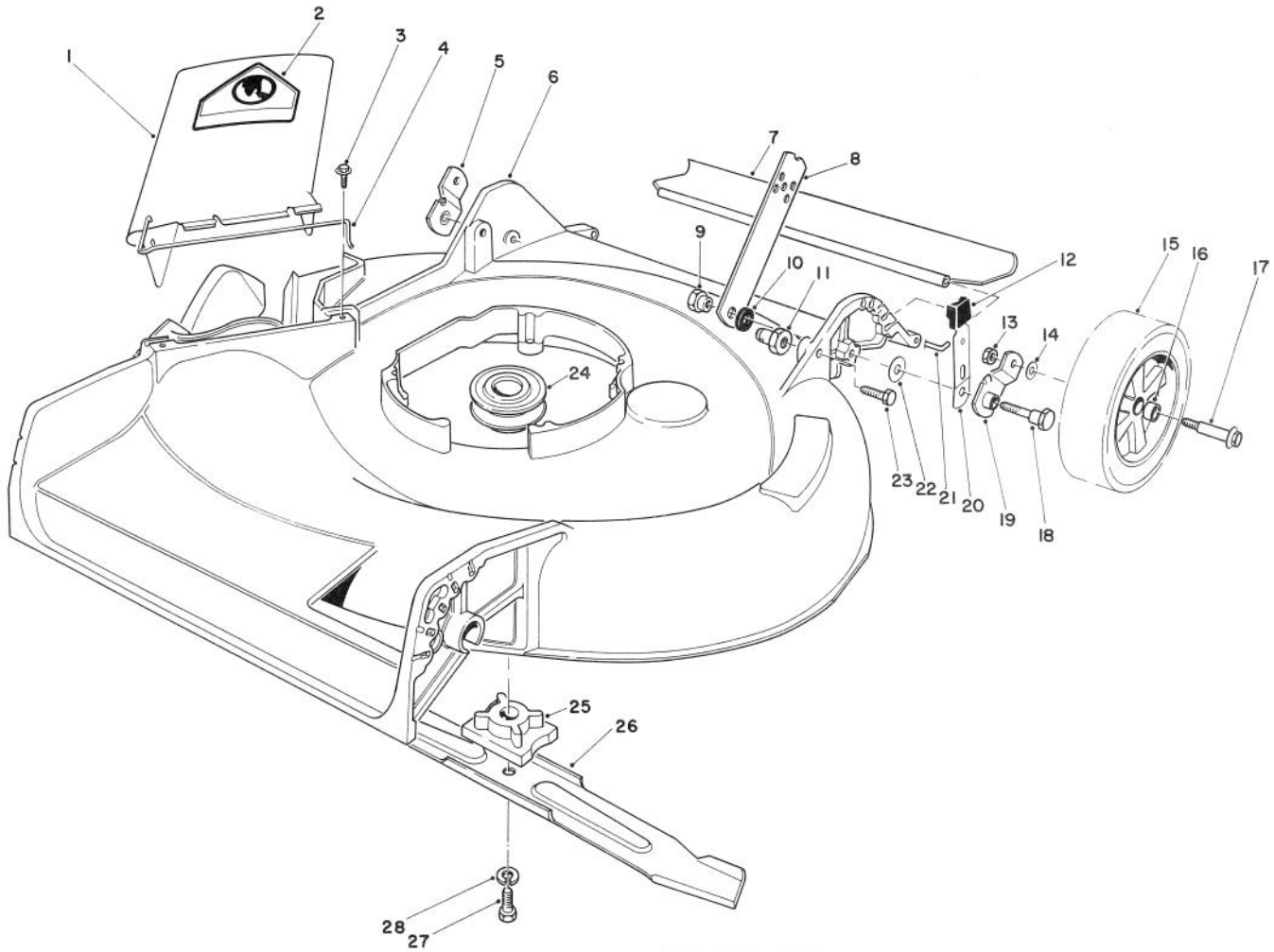

HOUSING ASSEMBLY

Ref. No.	Part No.	Description	No. Used
1	27-7817	Deflector Assembly (Incl. Ref. #2 & 4)	1
2	39-5770	Decal — Danger	1
3	46-6811	Screw w/Washer	2
4	20-2640	Spring Hinge	1
5	20-2130	Pivot Arm Assembly "B"	1
6	11-4639	Housing — 21"	1
7	22-4950	Shield — Rear	1
8	27-7080	Latch — Handle	2
9	27-6520	Nut — Shoulder	2
10	3-3287	Spacer — Handle Latch	2
11	12-2080	Nut — Shoulder	2
12	25-7740	Knob — Spring Arm	2
13	3296-6	Locknut	2
14	40-1940	Washer — Wheel Bolt	2

Ref. No.	Part No.	Description	No. Used
15	27-6200	Wheel & Tire Assembly (Incl. Ref. #16)	2
16	27-6250	Bushing	4
17	27-6231	Wheel Bolt	2
18	28-8880	Screw — Pivot	2
19	20-2140	Pivot Arm Assembly "A"	1
20	25-8000	Spring Arm Assembly	2
21	33-3201	Rod — Rear Shield	1
22	5-4460	Washer — Pivot	2
23	322-6	Capscrew — Hex. Hd.	2
24	46-7910	Pulley — Driver	1
25	49-7900	Retainer Blade	1
26	20-2720	Blade — 21"	1
27	26-0671	Blade Screw	1
28	3253-22	Lockwasher	1
*	12-0989	Loose Parts	1

*Not Illustrated

PRICE $1.00

© The Toro Company — 1985

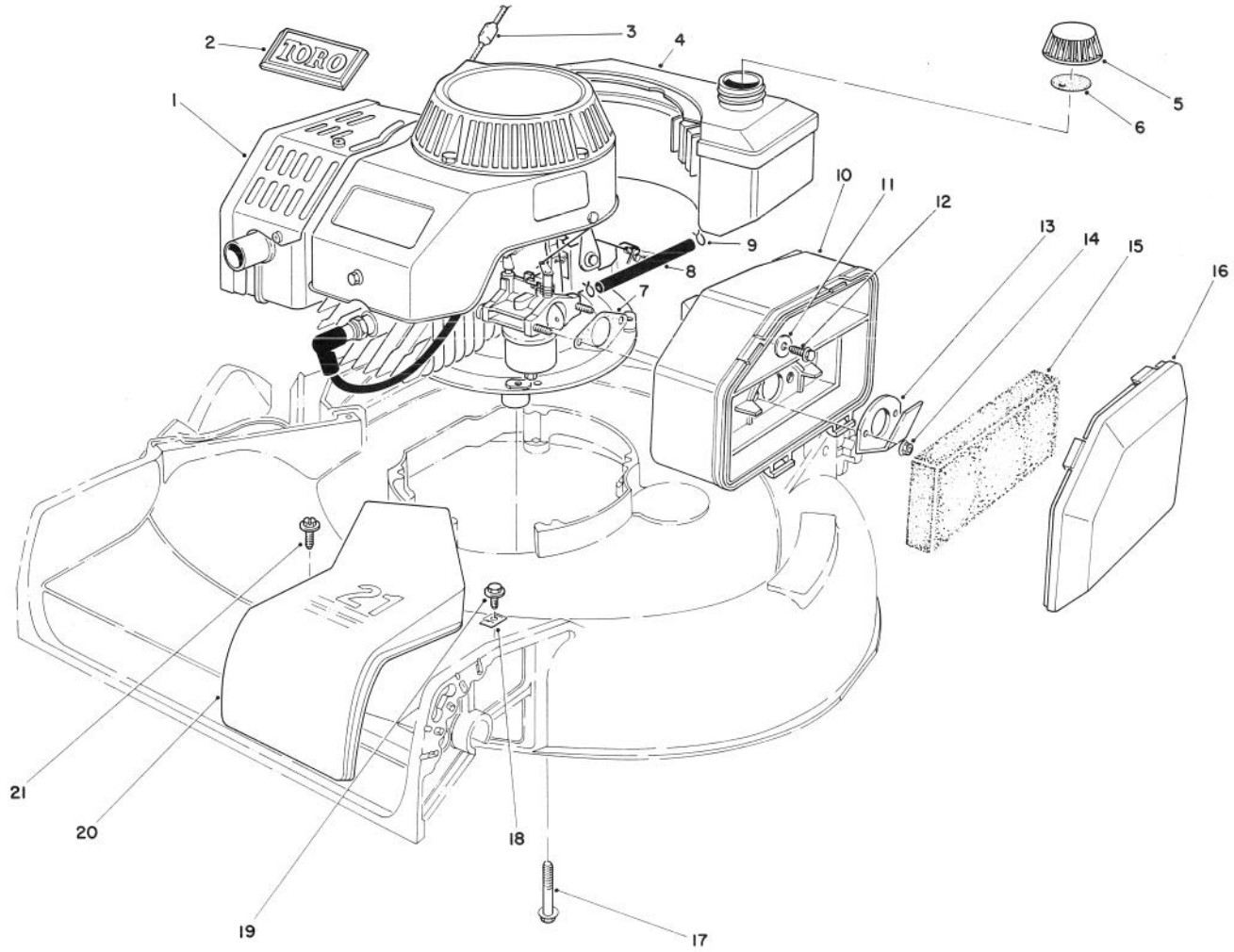

ENGINE ASSEMBLY

Ref. No.	Part No.	Description	No. Used
1	59257	Engine (Complete)	1
2	46-8290	Plate — Toro Logo	1
3	47-2480	Stop — Rope	1
4	81-0160	Fuel Tank Assembly	1
5	42-0681	Gas Cap Assembly (Incl. Ref. #6)	1
6	20-4620	Gasket	1
7	81-0090	Gasket — Air Cleaner	1
8	81-2310	Fuel Line	1
9	2412-80	Clamp — Fuel Line	2
10	81-0110	Air Cleaner	1

Ref. No.	Part No.	Description	No. Used
11	3256-16	Washer — Flat	1
12	51-2690	Screw — Washer Hd.	1
13	81-0140	Deflector	1
14	49-7810	Locknut	2
15	81-0100	Floam Element — Air Cleaner	1
16	81-0120	Cover — Air Cleaner	1
17	3234-20	Capscrew — Hex. Hd.	4
18	46-5610	Clamp — Cable	1
19	32144-11	Screw — Thread Forming	1
20	46-4780	Cover — Belt	1
21	12-5450	Screw — Thread Forming	2

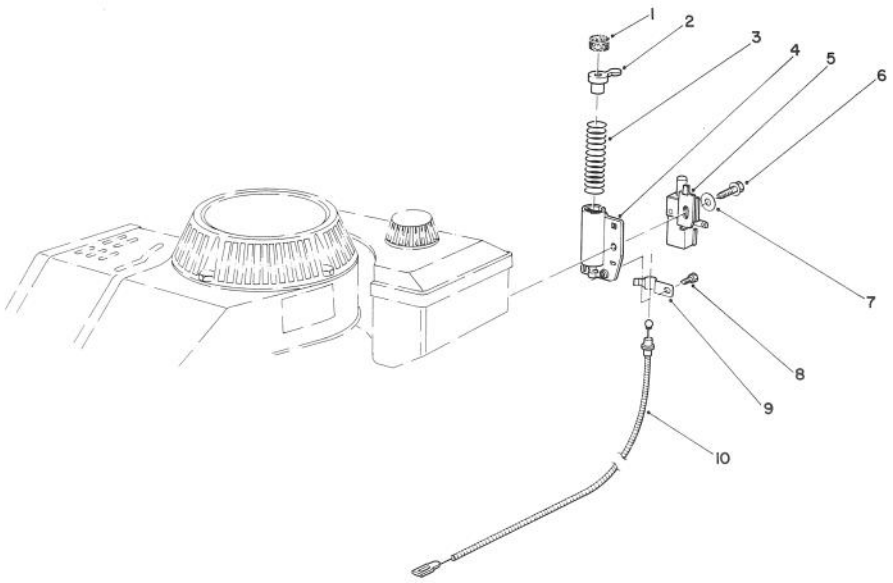

BRAKE ASSEMBLY

Ref. No.	Part No.	Description	No. Used
1		Pad — Friction	1
2	47-7350	Plunger & Pad Assembly (Incl. Ref. #1)	1
3	46-9130	Spring — Compression	1
4	46-5840	Tube	1
5	47-6520	Switch — Push Button	1

Ref. No.	Part No.	Description	No. Used
6	46-0790	Screw — Self Tapping	1
7	3256-22	Washer — Plain	1
8	12-5450	Screw — Thread Forming Hex Washer Hd.	1
9	46-6530	Cable Clamp	1
10	43-4533	Cable — Brake	1

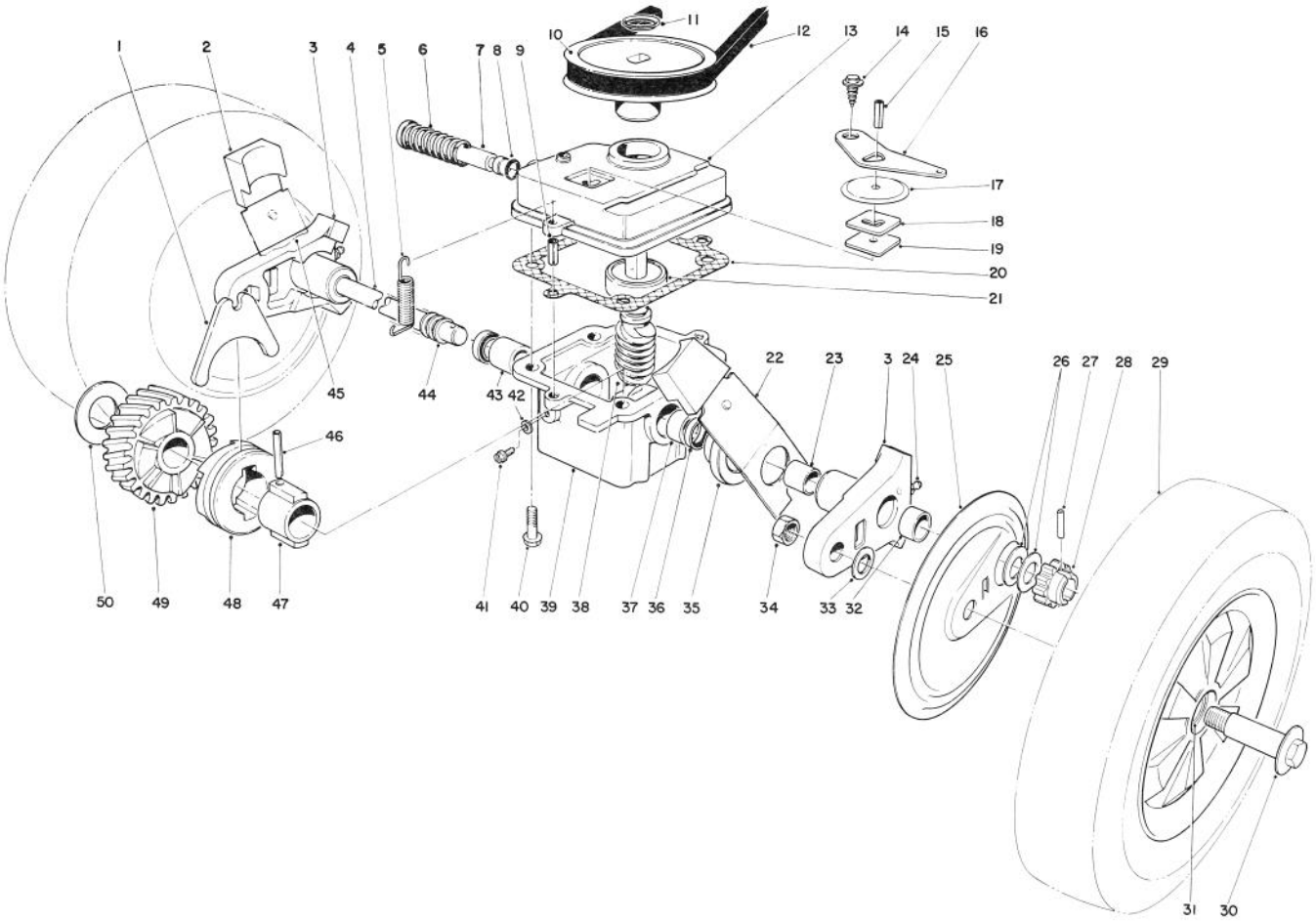

GEAR CASE ASSEMBLY

Ref. No.	Part No.	Description	No. Used
1	5-3247	Shifter Fork	1
2	25-7740	Knob Arm	2
3	38-2220	Pivot Arm (Incl. Ref. #23, 24 & 32)	2
4	37-9440	Drive Shaft	1
5	17-4490	Spring — Belt Tension	1
6	3-0731	Spring	1
7	46-8240	Shifter Rod	1
8	237-137	"O" Ring	1
9	32121-1	Roll Pin	2
10	18-9760	Pulley	1
11	3290-346	Push On Retainer	1
12	5-4505	V-Belt	1
13	39-1101	Gear Case Cover	1
14	32140-64	Screw — Self Tapping	1
15	32121-114	Roll Pin	1
16	5-3252	Shifter Arm	1
17	52-7380	Transmission Dust Cover	1
18	3-0681	Latch Plate	1
19	52-7370	Filter — Dust	1
20	36-1000	Gasket — Gear Case	1
21	47-7250	Ball Bearing	1

Ref. No.	Part No.	Description	No. Used
22	25-7930	Spring Arm Assembly L.H.	1
23	256-206	Bushing	2
24	302-56	Grease Fitting	2
25	52-7500	Wheel Cover	2
26	46-6510	Thrust Washer	4
27	32121-98	Pin — Coil	2
28	46-5930	Pinion Gear	2
29	11-1419	Wheel, Tire & Gear Assembly (Incl. Ref. #31)	2
30	27-6231	Wheel Bolt	2
31	27-6250	Bushing — Wheel	4
32	256-1	Bushing	2
33	40-1940	Washer — Wheel Bolt	2
34	3296-6	Nut	2
35	42-3520	End Cap	2
36	47-6730	Oil Seal	2
37	47-2890	Bushing	1
38	8-5679	Worm Shaft & Gear (Incl. Ref. #49)	1
39	8-0479	Gear Case (Incl. Ref. #36-37 & 43)	1
40	11-9760	Screw	4

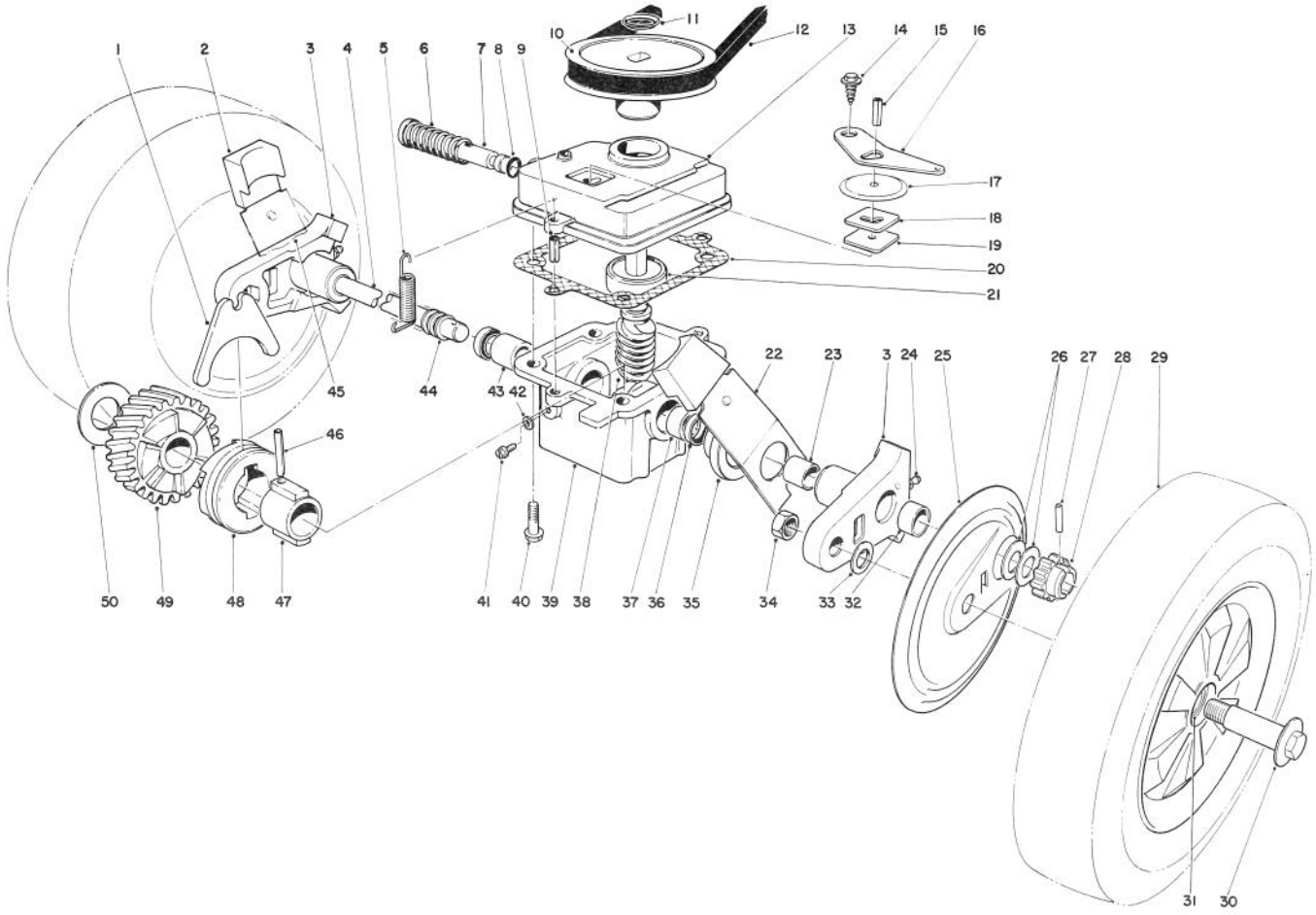

GEAR CASE ASSEMBLY (Continued)

Ref. No.	Part No.	Description	No. Used
41	28-1550	Screw — Nylon	1
42	46-9640	Gasket	1
43	47-2900	Bushing	1
44	24-7920	Cover Drive Shaft	1
45	25-7920	Spring Arm Assembly R.H.	1
46	32121-88	Coil Pin	1
47	3-0721	Sleeve	1

Ref. No.	Part No.	Description	No. Used
48	19-5660	Clutch Jam	1
49		Helical Gear	1
50	3-0724	Thrust Washer	1
*	52-7360	Gear Case Assembly (Complete)	1
*	27-0490	Bearing & Shaft Tool	1
*†	39-9640	Metric Bearing Tool	1

*Not Illustrated

† Use with 27-0490 Bearing & Shaft Tool.

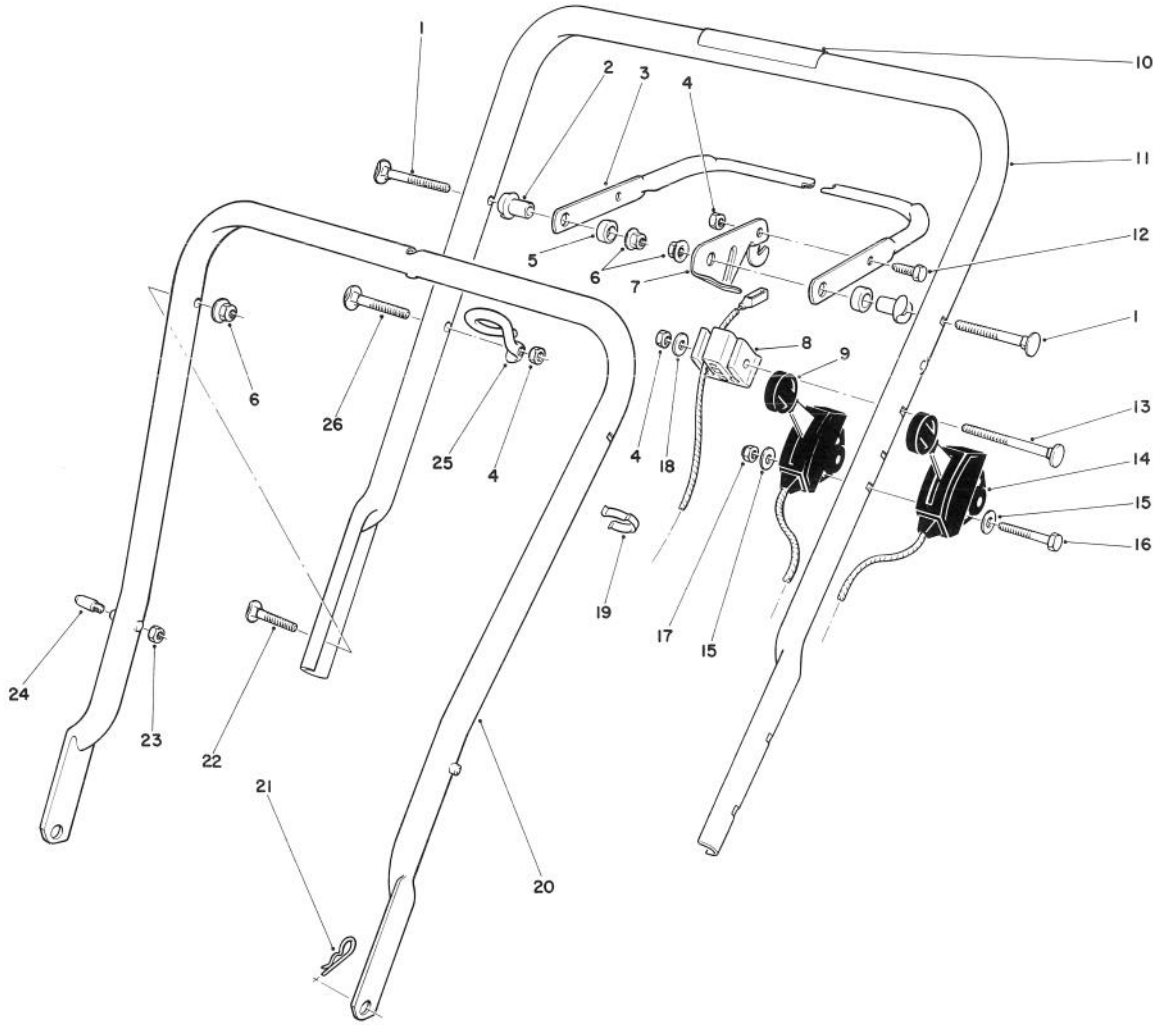

HANDLE ASSEMBLY

Ref. No.	Part No.	Description	No. Used
1	17-9421	Screw — Handle	2
2	49-1630	Support — Spacer	2
3	49-4220	Bar — Control	1
4	3296-42	Nut — Lock	3
5	256-276	Spacer — Nylon	2
6	3296-58	Nut — Flange Lock	4
7	46-7950	Lever — Control	1
8	46-6980	Support — Cable	1
9	49-4194	Control — Throttle (Bend Type #1) (Sheath Lg. 35-1/4") (Wire Log. 2-3/8")	1
10	52-7510	Decal — Warning	1
11	49-4231	Handle — Upper	1
12	321-3	Capscrew	1
13	46-6434	Screw — Handle	1

Ref. No.	Part No.	Description	No. Used
14	46-6030	Control — Traction (Bend Type #3) (Sheath Lg. 46") (Wire Log. 2-1/2")	1
15	3256-14	Washer — Flat	4
16	3290-435	Capscrew	2
17	3296-2	Nut — Lock	2
18	3256-22	Washer — Flat	1
19	218-465	Clip — Cable (Double)	1
20	49-1690	Lower Handle Assembly	1
21	3290-255	Pin — Cotter Hair	2
22	17-9424	Screw — Handle	2
23†	3296-47	Nut — Lock	2
24†	49-2750	Pin — Handle	2
25	46-8080	Guide — Rope	1
26	46-6433	Screw — Handle	1

† Service Replacement Part

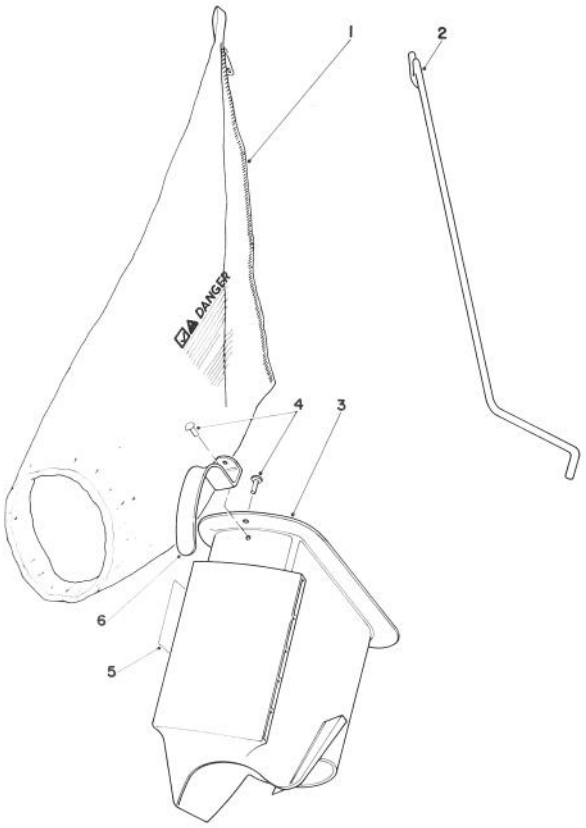

BAGGING KIT NO. 47-6510 (OPTIONAL)

Ref. No.	Part No.	Description	No. Used
1	6-0929	Grass Bag	1
2	47-5830	Bag Rod	1
3	6-1089	Grass Chute (Incl. Ref. #4&6)	1

Ref. No.	Part No.	Description	No. Used
4	3295-26	Rivet	2
5	36-5230	Decal — Bag Chute	1
6	20-4650	Handle Chute	1

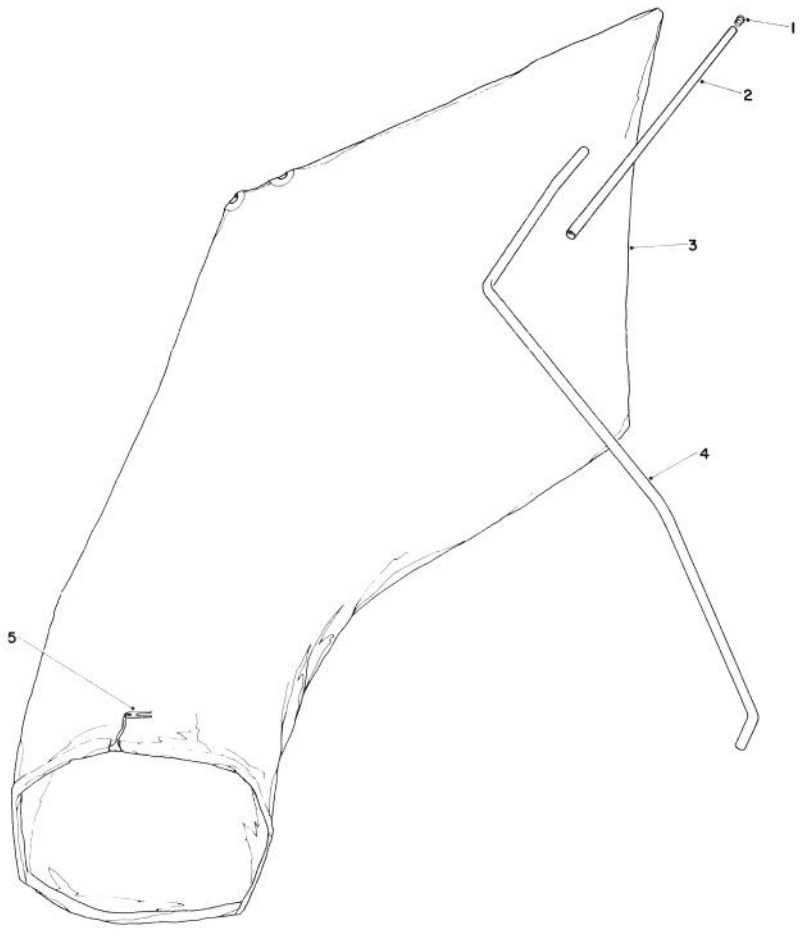

GIANT BAGGING KIT NO. 29-9750 (OPTIONAL)

Ref. No.	Part No.	Description	No. Used
1	2410-29	Cap	1
2	29-7000	Tube 25"	1
3	8-4719	Bag (Incl. Ref. #5)	1

Ref. No.	Part No.	Description	No. Used
4	22-4820	Hanger Rod	1
5	3-2781	Bag Cord Fasteners	1

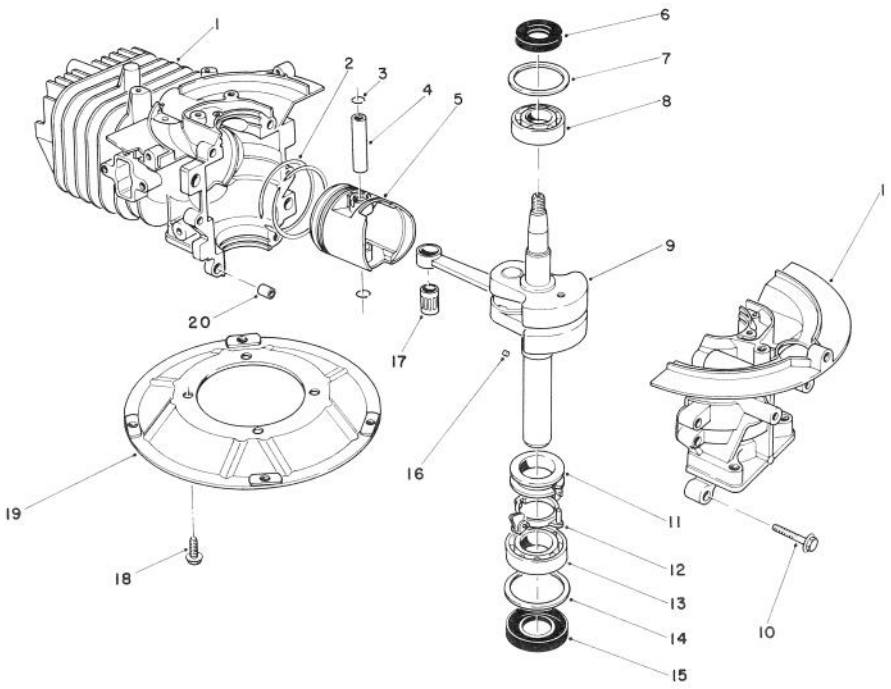

CRANKSHAFT ASSEMBLY

Ref. No.	Part No.	Description	No. Used
1	81-2060	Crankcase/Cylinder Assy.	1
2	81-0590	Ring Set	1
3	81-0620	Circlip	2
4	81-0600	Pin — Wrist	1
5	81-0580	Piston (58 mm)	1
6	81-0720	Oil Seal — Upper	1
7	81-0710	Thrust Washer — Upper	1
8	81-0690	Bearing — Upper (20 mm)	1
9	81-1550	Crankshaft/Connecting Rod Assembly	1
10	81-0540	Bolt (30 mm Lg.)	6

Ref. No.	Part No.	Description	No. Used
11	81-0770	Spacer — Governor	1
12	81-0750	Bracket — Governor Arm	1
13	81-0700	Bearing — Lower (25 mm)	1
14	81-0730	Thrust Washer — Lower	1
15	81-0740	Oil Seal — Lower	1
16	81-0760	Pin — Crankshaft	1
17	81-0610	Bearing — Wrist Pin	1
18	81-0570	Bolt (20 mm Lg.)	4
19	81-0560	Plate — Mounting	1
20	81-0520	Pin — Crankcase	2
*	11-6289	Short Block Assembly	1

*Not Illustrated

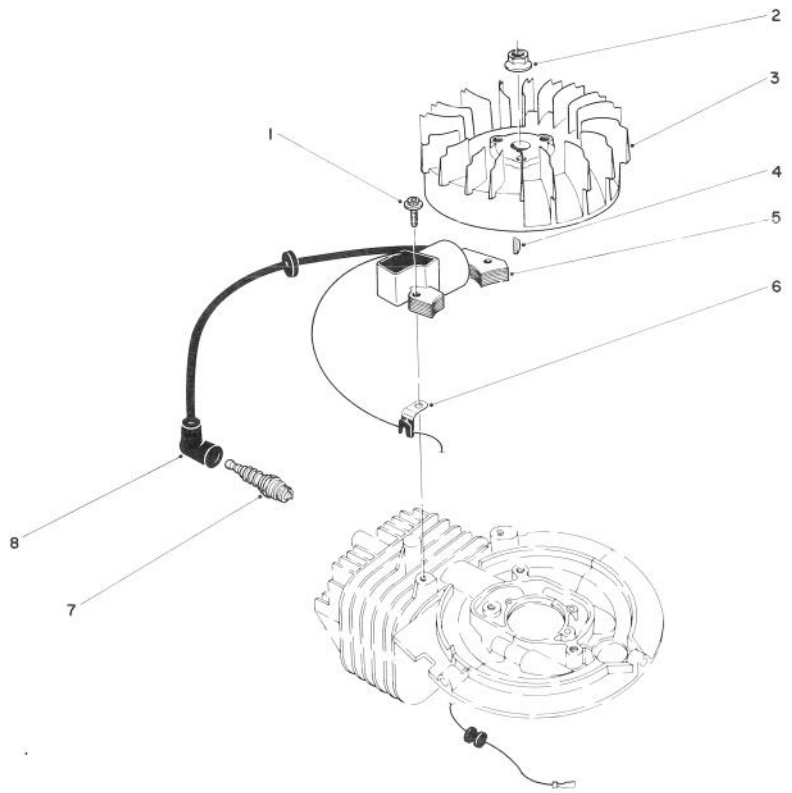

FLYWHEEL & MAGNETO ASSEMBLY

Ref. No.	Part No.	Description	No. Used
1	81-2050	Capscrew — Allenhead	2
2	81-1330	Nut	1
3	81-1980	Flywheel — Magneto	1
4	81-1320	Key — Flywheel	1
5	81-1990	Coil/Ignition Assembly	

Ref. No.	Part No.	Description	No. Used
6	81-1480	Clamp	1
7	81-0181	Spark Plug	1
8	81-1500	Cover — Spark Plug	1
*	41-7650	Puller — Flywheel	1

*Not Illustrated

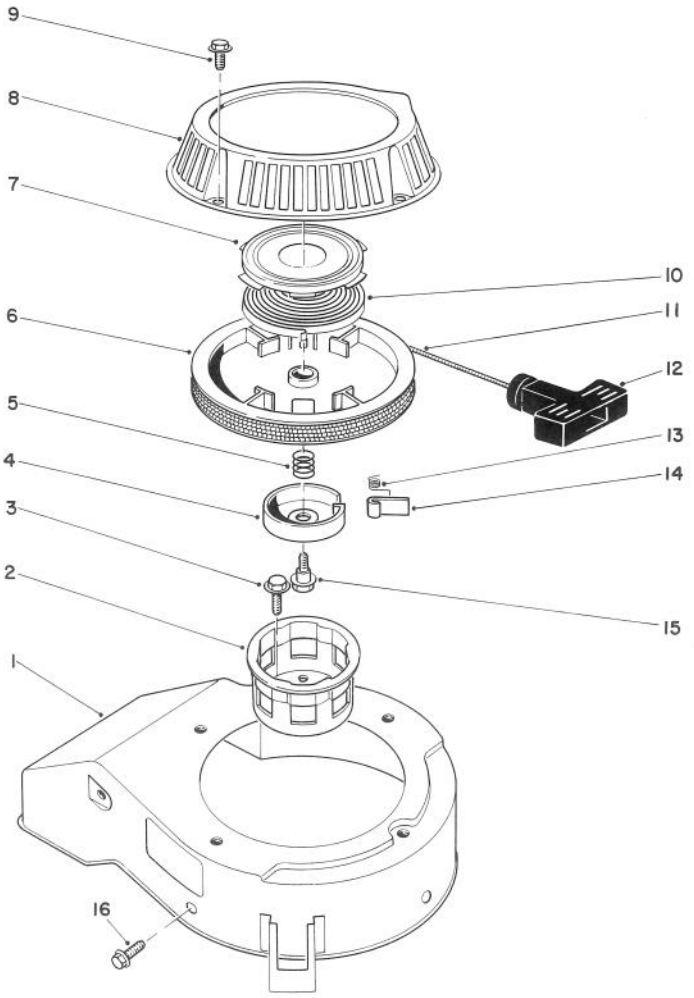

RECOIL ASSEMBLY

Ref. No.	Part No.	Description	No. Used
1	81-2070	Cover — Cooling Fan	1
2	81-1290	Cup — Starter Pulley	1
3	81-1300	Bolt (16 mm Lg.)	3
4	81-1250	Retainer — Dog	1
5	81-1240	Spring — Compression	1
6	81-1210	Reel — Rope Pulley	1
7	81-1640	Retainer — Recoil Spring	1
8	81-2090	Case — Recoil	1
9	81-1280	Bolt (10 mm Lg.)	4
10	81-1200	Spring — Recoil	1
11	81-1270	Rope	1

Ref. No.	Part No.	Description	No. Used
12	81-1630	Handle — Recoil	1
13	81-1220	Spring — Dog	1
14	81-1230	Dog	1
15	81-1260	Bolt — Shoulder	1
16	81-1170	Bolt — Self Tapping (15 mm Lg.)	3
*	47-2480	Stop — Rope	1
*	81-2040	Starter Assembly (Incl. Ref. #4-8, 10-15)	1
*	81-2300	Spring & Retainer (Incl. Ref. #7 & 10)	1

*Not Illustrated

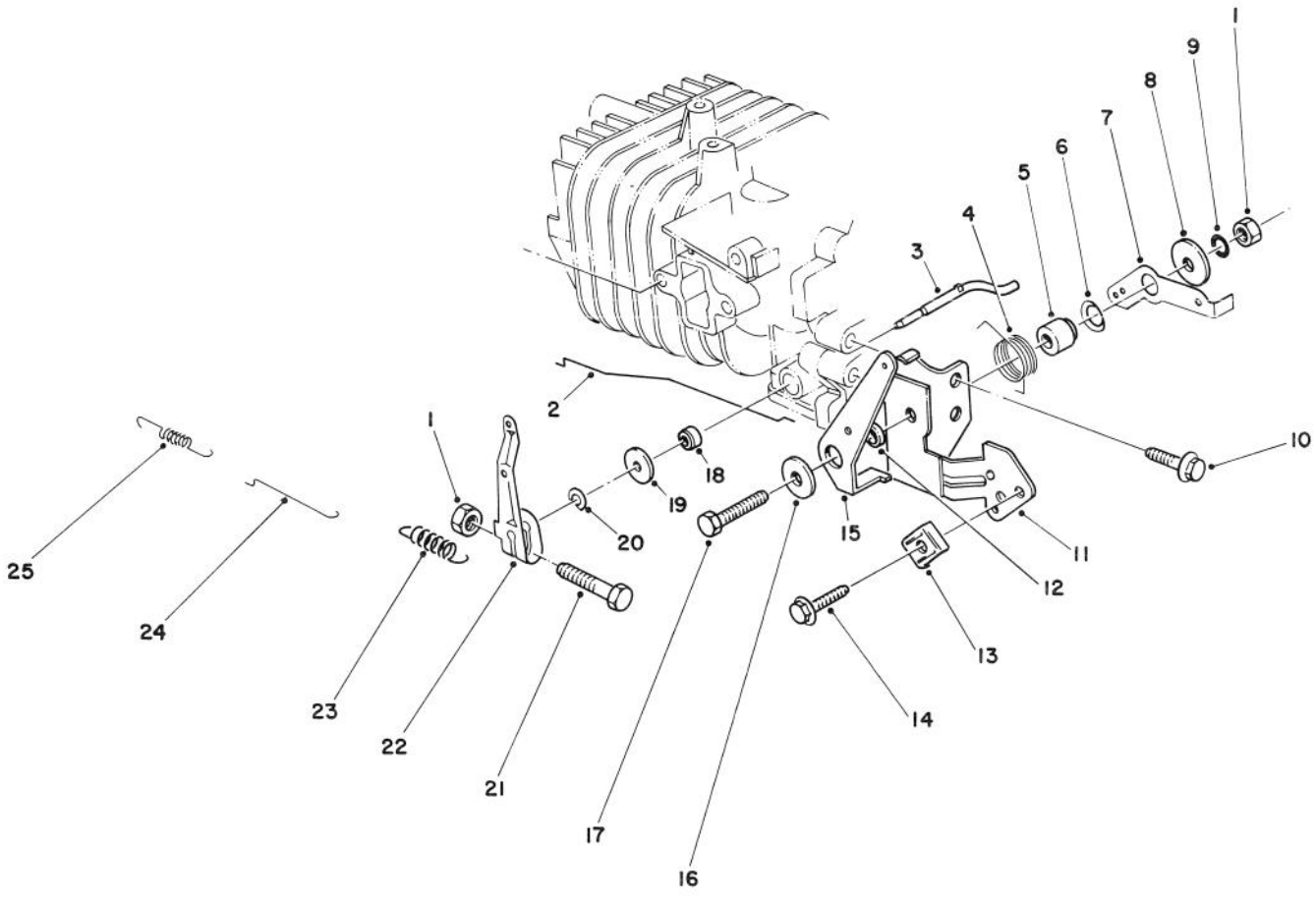

GOVERNOR ASSEMBLY

Ref. No.	Part No.	Description	No. Used
1	81-0900	Nut	2
2	81-1720	Rod — Choke	1
3	81-0840	Shaft — Governor	1
4	81-2460	Spring — Choke Control Lever	1
5	81-1770	Spacer — Governor Spring Lever	1
6	81-1820	Washer — Governor Spring Lever	1
7	81-1670	Lever — Governor Spring	1
8	81-1750	Washer — Choke Control Lever	1
9	81-1450	Washer — Lock	1
10	81-1170	Bolt — Self Tapping (15 mm Lg.)	1
11	81-2420	Bracket — Throttle Control	1
12	81-2470	Spacer — Choke Control Lever	1

Ref. No.	Part No.	Description	No. Used
13	81-2430	Clamp — Cable	1
14	50-0130	Bolt — Cable Clamp	1
15	81-1710	Lever — Choke Control	1
16	50-0760	Washer — Choke Control Lever	1
17	81-1730	Bolt — Throttle Control Bracket	1
18	81-0850	Oil Seal — Governor Shaft	1
19	81-0860	Washer	1
20	81-0870	E-Ring	1
21	81-0890	Bolt — Throttle Lever	1
22	81-0880	Lever — Throttle Control	1
23	81-1970	Spring — Governor	1
24	81-0910	Rod — Carburetor	1
25	81-0920	Spring — Carburetor Rod	1

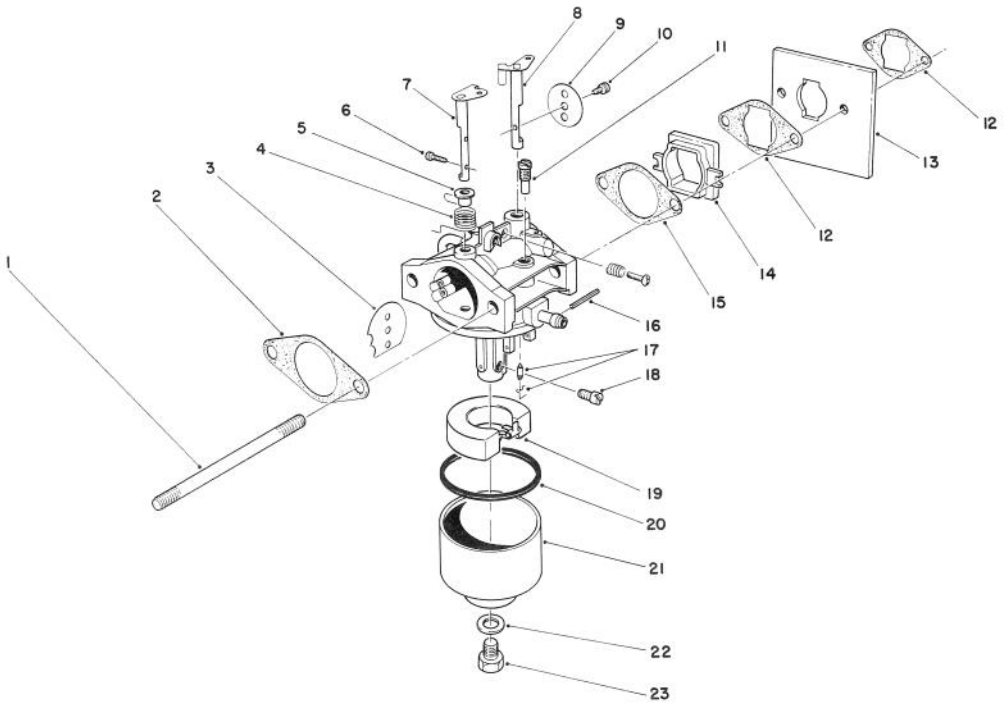

CARBURETOR ASSEMBLY

Ref. No.	Part No.	Description	No. Used
1	81-2240	Stud Bolt — Carburetor	2
2	81-0090	Gasket	1
3	81-0240	Valve — Choke	1
4	81-0230	Spring — Choke	1
5	81-0220	Bushing — Choke Valve	1
6	81-2160	Screw	2
7	81-1950	Shaft — Choke	1
8	81-0250	Shaft — Throttle	1
9	81-0260	Valve — Throttle	1
10	81-0270	Screw — Throttle Valve	1
11	81-1030	Jet — Pilot (40)	1
12	81-2320	Gasket — Shield	2
13	81-2330	Shield — Carburetor	1
14	81-2190	Insulator — Carburetor	1
15	81-0780	Gasket	1

Ref. No.	Part No.	Description	No. Used
16	81-0980	Pin	1
17	81-1600	Needle Valve/Spring Wire	1
18	81-1940	Jet — Main (76.3)	1
*	81-2340	Jet Main (72.5) High Altitude, Above 6,000 Ft. (Optional)	1
19	81-0970	Float	1
20	81-1010	Gasket — Float Bowl	1
21	81-1610	Bowl — Float	1
22	81-1020	Gasket — Bowl Screw	1
23	81-1000	Screw — Bowl	1
*	81-1960	Carburetor Kit (Incl. Ref. #2, 15, 17, 20 & 22)	1
*	81-1930	Carburetor Assembly — Complete	1

*Not Illustrated

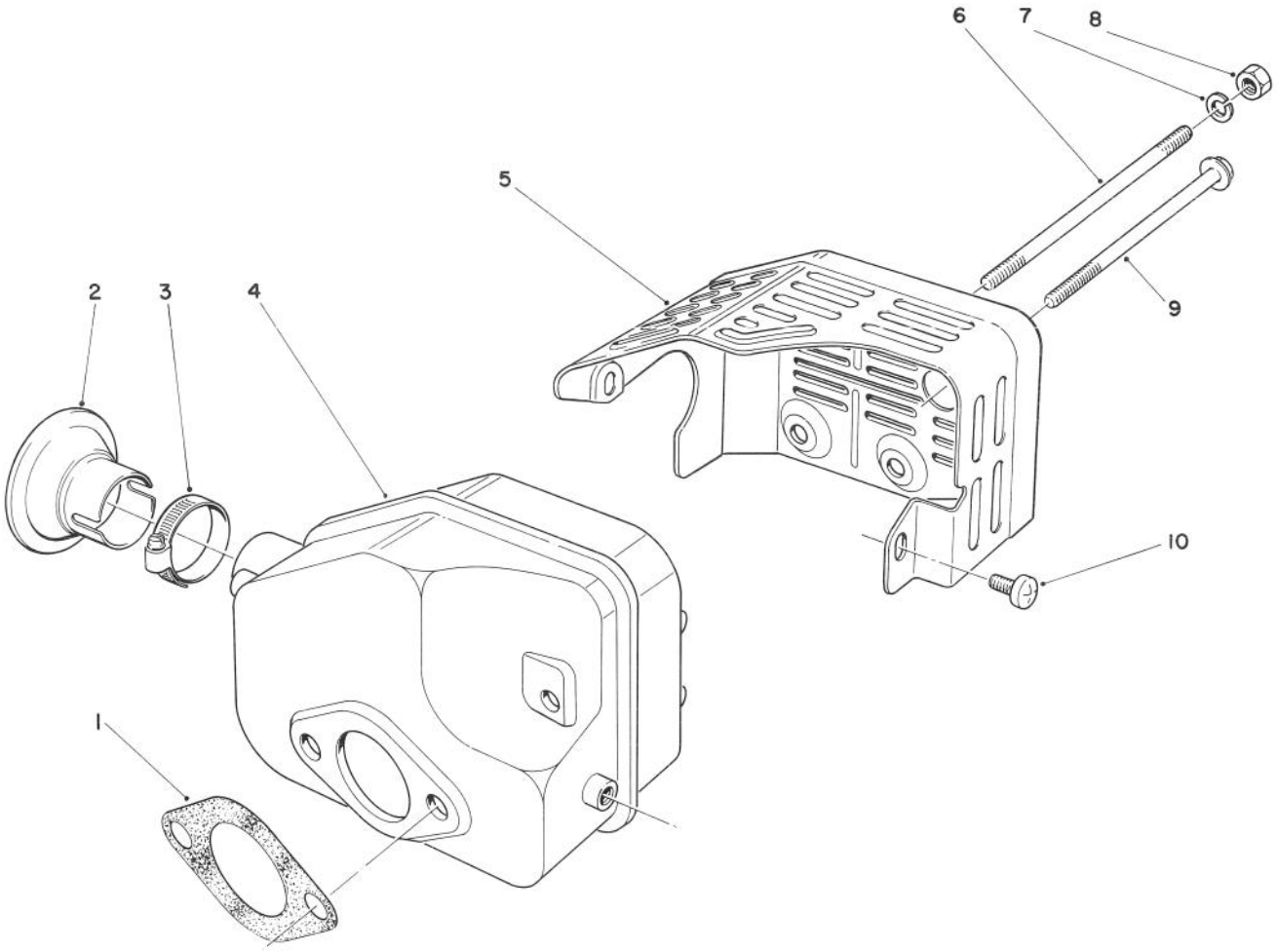

MUFFLER ASSEMBLY

Ref. No.	Part No.	Description	No. Used
1	81-1080	Gasket — Muffler	1
2*	81-0200	Spark Arrester	1
3†		Clamp	1
4	81-1090	Muffler	1
5	81-2450	Cover — Muffler	1

Ref. No.	Part No.	Description	No. Used
6	81-1100	Bolt	2
7	81-1120	Washer — Lock	2
8	81-1110	Nut	2
9	81-1150	Bolt — Self Tapping	1
10	81-1140	Screw — Phillips Hd.	2

*Optional Equipment
†Obtain Locally

PRODUCT CHANGES

In an effort to make improvements available to TORO owners as quickly as possible, minor changes are incorporated into Toro's products from time to time that do not become immediately shown in the Parts Catalog. If such a change apparently has been made in your unit, which is not reflected in your manual, see your TORO Distributor or his Authorized TORO Service Dealer for information and part numbers.

IDENTIFICATION AND ORDERING

MODEL AND SERIAL NUMBERS

The Mower has two identification numbers: a model number and a serial number. The two numbers are stamped on a decal which is located on the mower housing between the rear wheels. In any correspondence concerning the mower, supply model and serial numbers to assure that correct information and replacement parts are obtained.

To order replacement parts from an Authorized TORO Service Dealer, supply the following information:

1. Model and serial number of the mower.
2. Part number, description, and quantity of part(s) desired.

Note: Do not order by reference number if a parts catalog is being used; use the PART NUMBER.

The Toro Promise

A Two Year Limited Warranty
On All Gasoline Powered Consumer Products

The Toro Company promises to repair your TORO Product if defective in materials or workmanship. The following time periods from the date of purchase apply:

Residential Product ..... 2 Years
Residential Products Used Commercially... 45 Days

The costs of parts and labor are included, but the customer pays the transportation costs. Just return any residential product to an Authorized TORO Service Dealer or TORO Distributor.

Should you feel your TORO Product is defective and wish to rely on The Toro Promise, the following procedure is recommended:

1. Contact any Authorized TORO Service Dealer, TORO Master Service Dealer, or TORO Distributor (the Yellow Pages of your telephone directory is a good reference source).
2. He will either instruct you to return the product to him or recommend another Authorized TORO Service outlet which might be more convenient.
3. Bring the product along with your original sales slip, or other evidence of purchase date, to the service dealer.
4. The servicing dealer will inspect the unit, advise you whether the product is defective and, if so, make all repairs necessary to correct the defect without extra charge to you.

If for any reason you are dissatisfied with the dealer's analysis of the defect or the service performed, you may contact us.

Write:

TORO Consumer Service Department
8111 Lyndale Avenue South
Minneapolis, Minnesota 55420

The above remedy of product defects through repair by an Authorized TORO Service Dealer is the purchaser's sole remedy for any defect.

THERE IS NO OTHER EXPRESS WARRANTY. ALL IMPLIED WARRANTIES OF MERCHANTABILITY AND FITNESS FOR USE ARE LIMITED TO THE DURATION OF THE EXPRESS WARRANTY.

Some states do not allow limitations on how long an implied warranty lasts, so the above limitation may not apply to you.

This warranty applies only to parts or components which are defective and does not cover repairs necessary due to normal wear, misuse, accidents, or lack of proper maintenance. Regular, routine maintenance of the unit to keep it in proper operating condition is the responsibility of the owner.

All warranty repairs reimbursable under The Toro Promise must be performed by an Authorized TORO Service Dealer using Toro approved replacement parts.

Repairs or attemped repairs by anyone other than an Authorized TORO Service Account are not reimbursable under The Toro Promise. In addition, these unauthorized repair attempts may result in additional malfunctions, the correction of which is not covered by warranty.

THE TORO COMPANY IS NOT LIABLE FOR INDIRECT, INCIDENTAL OR CONSEQUENTIAL DAMAGES IN CONNECTION WITH THE USE OF THE PRODUCT INCLUDING ANY COST OR EXPENSE OF PROVIDING SUBSTITUTE EQUIPMENT OR SERVICE DURING PERIODS OF MALFUNCTION OR NON-USE.

Some states do not allow the exclusion or limitation of incidental or consequential damages, so the above limitation or exclusion may not apply to you.

This warranty gives you specific legal rights, and you may also have other rights which vary from state to state.

COUNTRIES OTHER THAN THE UNITED STATES OR CANADA

Customers who have purchased TORO products exported from the United States or Canada should contact their TORO Distributor (Dealer) to obtain guarantee policies for your country, province or state. If for any reason you are dissatisfied with your Distributor's service or have difficulty obtaining guarantee information, contact the TORO importer. If all other remedies fail, you may contact us at The Toro Company.

Compliance with Radio Interference Regulations Certified.
Certifie Conforme au Reglement sur le Brouillage Radioelectrique.

MAINTENANCE RECORD

Date	Hours Used	Sharpen Blade	Air Cleaner Service	Lubrication	Winter Storage	Spring Service	Spark Plug Gap