FORM NO. 3312-608

TORO®

MODEL NO. 16585-5000001 & UP

PARTS CATALOG

21" H.P. SIDE DISCHARGE

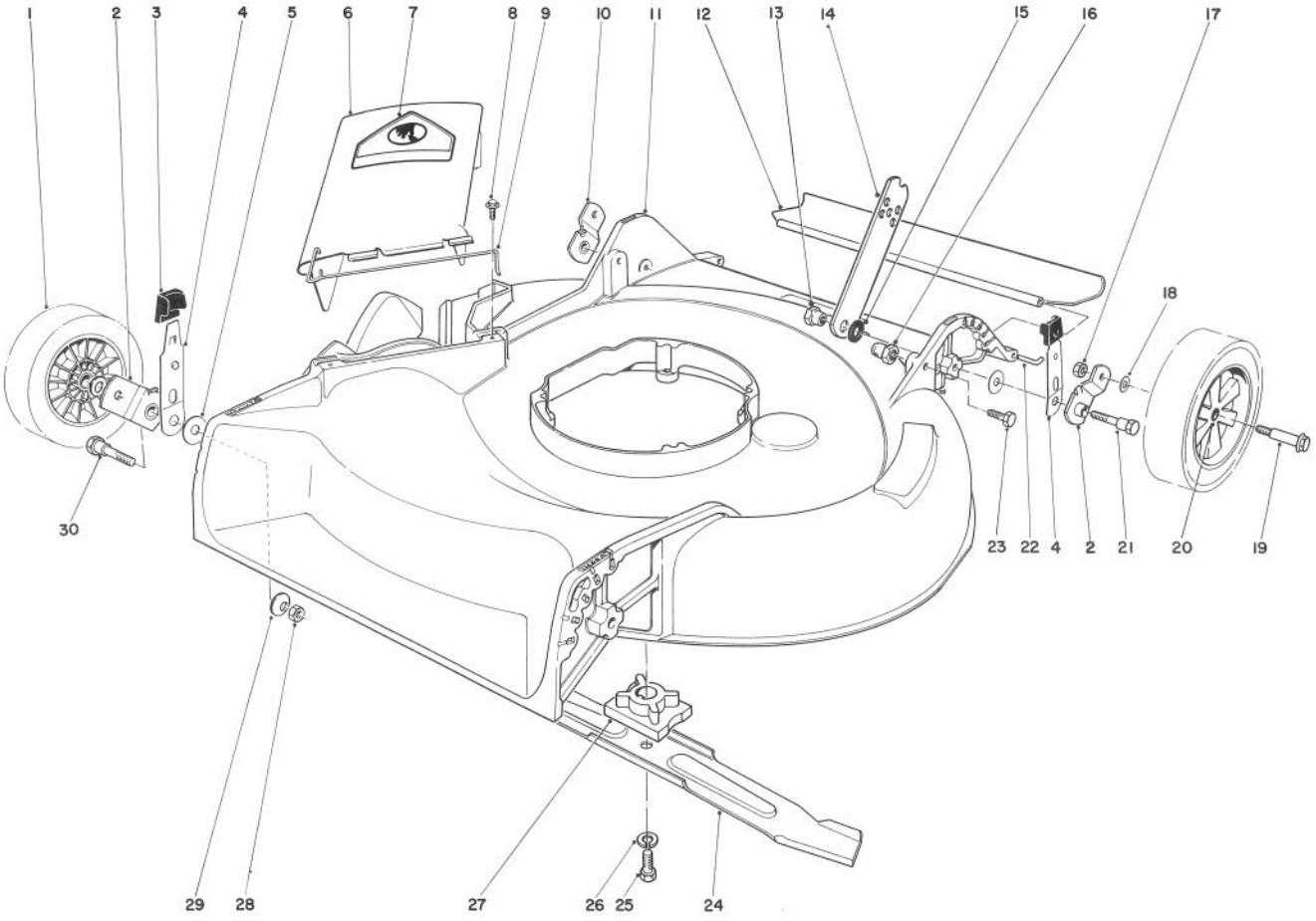

HOUSING ASSEMBLY

Ref. No.	Part No.	Description	No. Used
1	27-6200	Wheel & Tire Assembly (Incl. Ref. #20)	4
2	20-2140	Pivot Arm "A"	2
3	25-7740	Knob — Spring Arm	4
4	25-8000	Spring Arm	4
5	5-4460	Washer — Pivot	4
6	27-7817	Deflector Assembly (Incl. Ref. #7 & 9)	1
7	39-5770	Decal — Danger	1
8	46-6811	Screw & Washer Assembly	2
9	20-2640	Hinge — Spring	1
10	20-2130	Pivot Arm "B"	2
11	11-4589	Housing	1
12	22-4950	Shield — Rear	1
13	27-6520	Nut — Shoulder	2
14	27-7080	Latch — Handle	2
15	3-3287	Spacer — Handle Latch	2
16	12-2080	Nut — Shoulder	2
17	3296-6	Nut — Lock	4
18	40-1940	Washer — Wheel Bolt	4
19	27-6231	Bolt — Wheel	4
20	27-6250	Bushing — Wheel	8
21	28-8880	Screw — Pivot	2
22	33-3201	Rod — Rear Shield	1
23	322-6	Screw — Cap Hex. Hd.	2
24	20-2720	Blade	1
25	26-0671	Screw — Blade	1
26	3253-22	Washer — Lock	1
27	49-7900	Retainer — Blade	1
28	3296-29	Nut — Lock	2
29	3290-456	Washer — Belleville	2
30	25-3440	Screw — Pivot	2
*	12-0959	Loose Parts	1

*Not Illustrated

© The Toro Company — 1985

PRICE $1.00

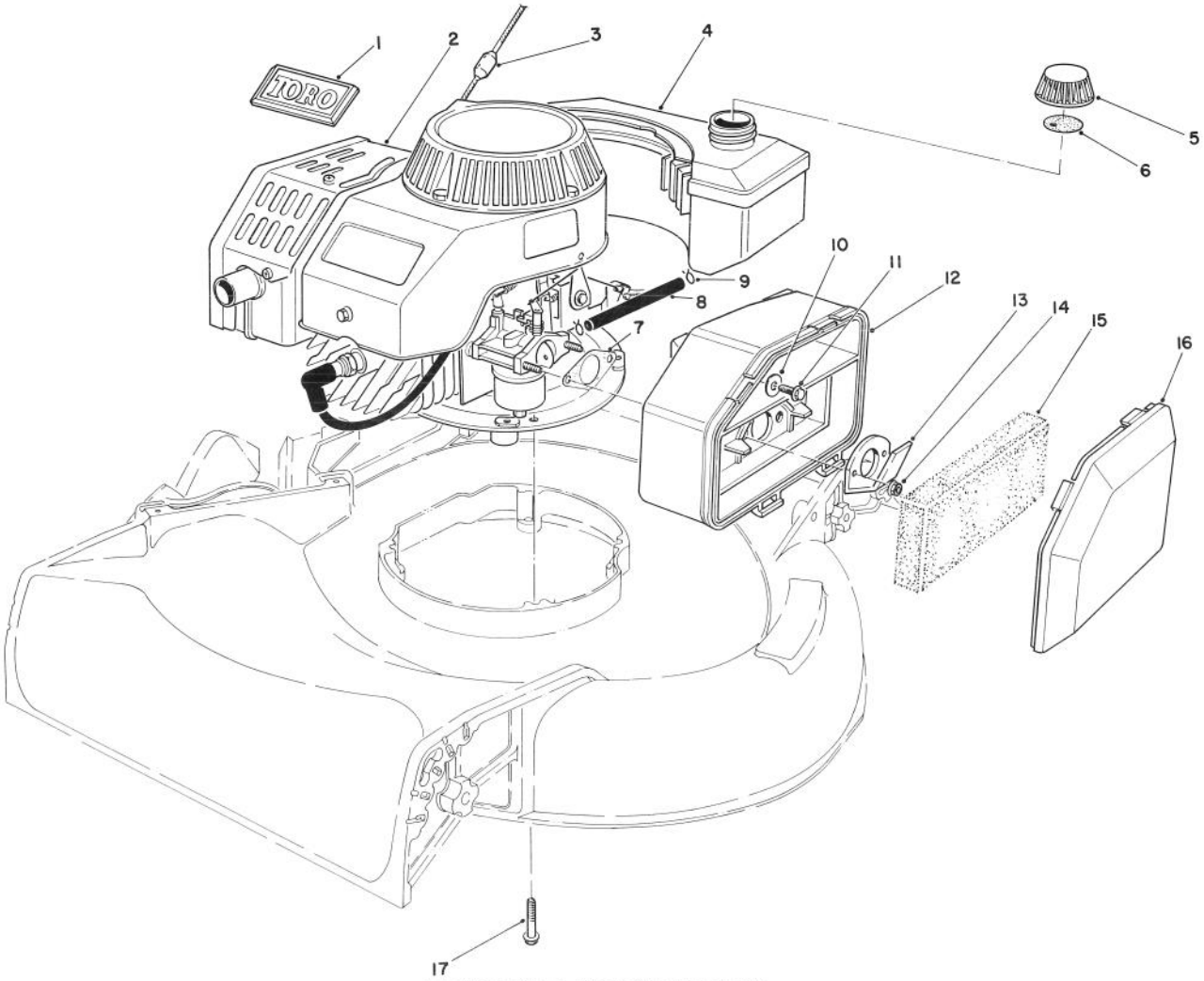

ENGINE ASSEMBLY

Ref. No.	Part No.	Description	No. Used
1	46-8290	Plate — Toro Logo	1
2	59257	Engine (Complete)	1
3	47-2480	Stop — Rope	1
4	81-0160	Fuel Tank Assembly	1
5	42-0681	Gas Cap Assy. (Incl. Ref. #6)	1
6	20-4620	Gasket — Gas Cap	1
7	81-0090	Gasket — Air Cleaner	1
8	81-2310	Fuel Line	1
9	2412-80	Clamp — Fuel Line	2

Ref. No.	Part No.	Description	No. Used
10	3256-16	Washer — Plain Flat	1
11	51-2690	Screw — Cap Hex Washer Hd.	1
12	81-0110	Air Cleaner	1
13	81-0140	Deflector	1
14	49-7810	Nut — Lock	2
15	81-0100	Foam Element — Air Cleaner	1
16	81-0120	Cover — Air Cleaner	1
17	3234-20	Screw — Cap Hex Flange Hd.	4

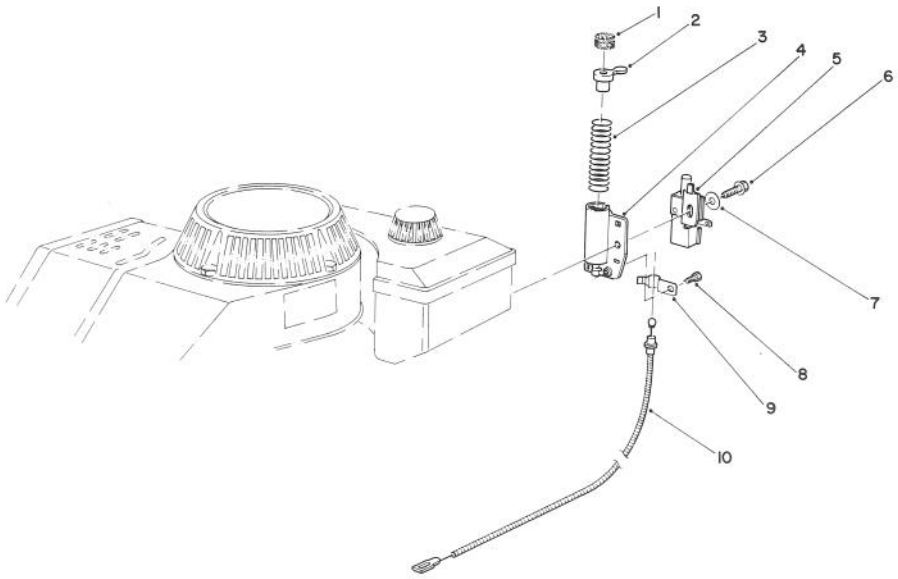

BRAKE ASSEMBLY

Ref. No.	Part No.	Description	No. Used
1		Pad — Friction	1
2	47-7350	Plunger & Pad Assembly (Incl. Ref. #1)	1
3	46-9130	Spring — Compression	1
4	46-5840	Tube	1
5	47-6520	Switch — Push Button	1

Ref. No.	Part No.	Description	No. Used
6	46-0790	Screw — Self Tapping	1
7	3256-22	Washer — Plain	1
8	12-5450	Screw — Thread Forming Hex Washer Hd.	1
9	46-6530	Cable Clamp	1
10	43-4533	Cable — Brake	1

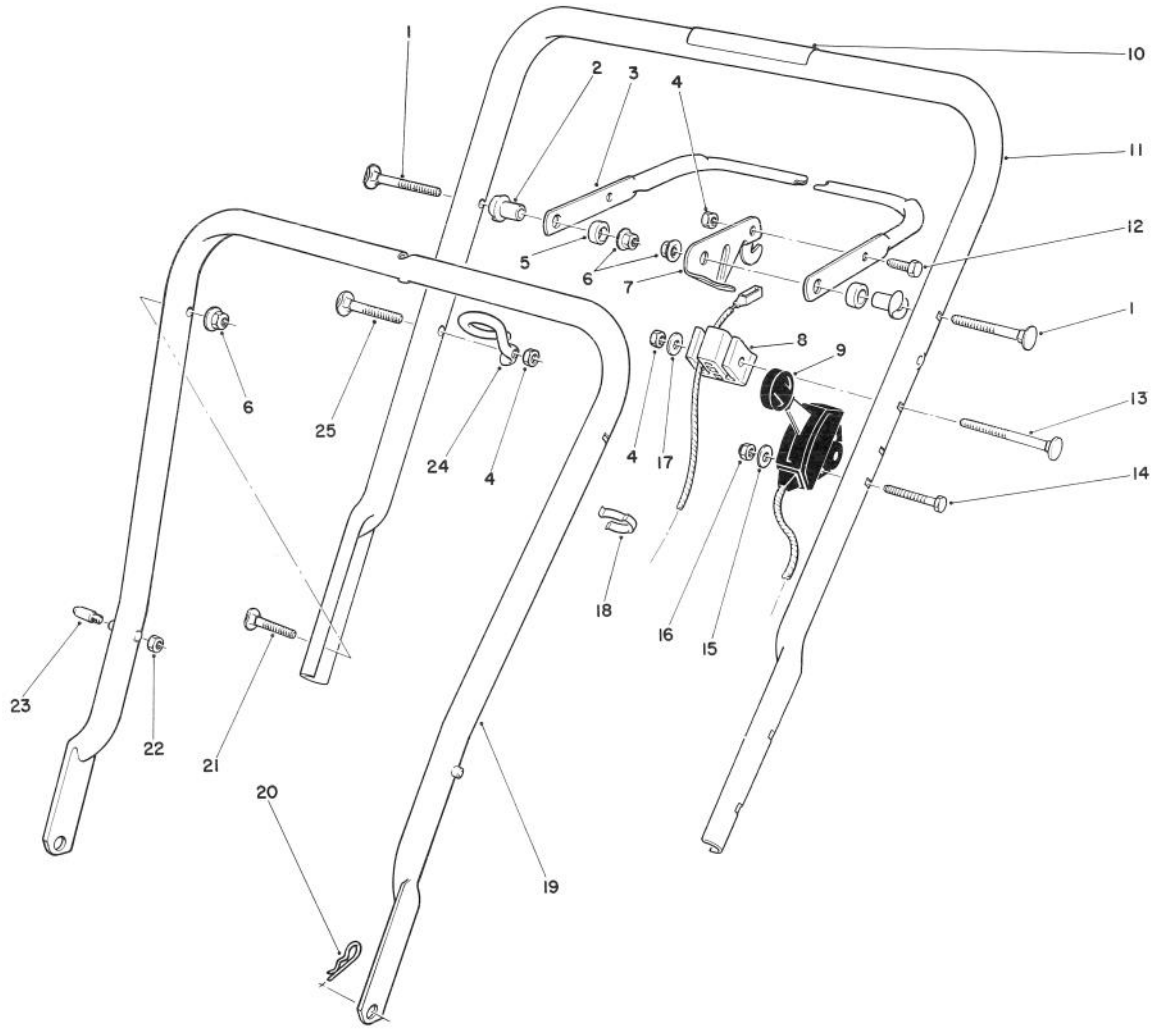

HANDLE ASSEMBLY

Ref. No.	Part No.	Description	No. Used
1	17-9421	Screw — Handle	2
2	49-1630	Support — Spacer	2
3	49-4220	Bar — Control	1
4	3296-42	Nut — Lock	3
5	256-276	Spacer — Nylon	2
6	3296-58	Nut — Flange Lock	4
7	46-7950	Lever — Control	1
8	46-6980	Support — Cable	1
9	49-4194	Control — Throttle (Bend Type #1) (Sheath Lg. 35-1/4") (Wire Lg. 2-3/8")	1
10	52-7510	Decal — Warning	1
11	49-4231	Handle — Upper	1

Ref. No.	Part No.	Description	No. Used
12	321-3	Capscrew	1
13	46-6434	Screw — Handle	1
14	3290-424	Screw — Hex Machine	2
15	3256-14	Washer — Flat	2
16	3296-2	Nut — Lock	2
17	3256-22	Washer — Flat	1
18	218-465	Clip — Cable (Double)	1
19	49-1690	Lower Handle Assembly	1
20	3290-255	Pin — Cotter Hair	2
21	17-9424	Screw — Handle	2
22†	3296-47	Nut — Lock	2
23†	49-2750	Pin — Handle	2
24	46-8080	Guide — Rope	1
25	46-6433	Screw — Handle	1

† Service Replacement Part.

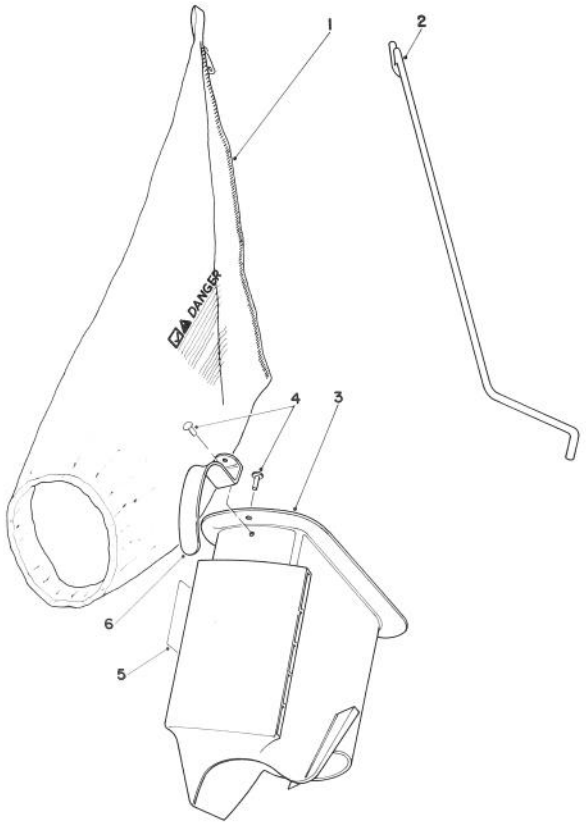

BAGGING KIT NO. 47-6510 (OPTIONAL)

Ref. No.	Part No.	Description	No. Used
1	6-0929	Grass Bag	1
2	47-5830	Bag Rod	1
3	6-1089	Grass Chute (Incl. Ref. #4&6)	1

Ref. No.	Part No.	Description	No. Used
4	3295-26	Rivet	2
5	36-5230	Decal — Bag Chute	1
6	20-4650	Handle Chute	1

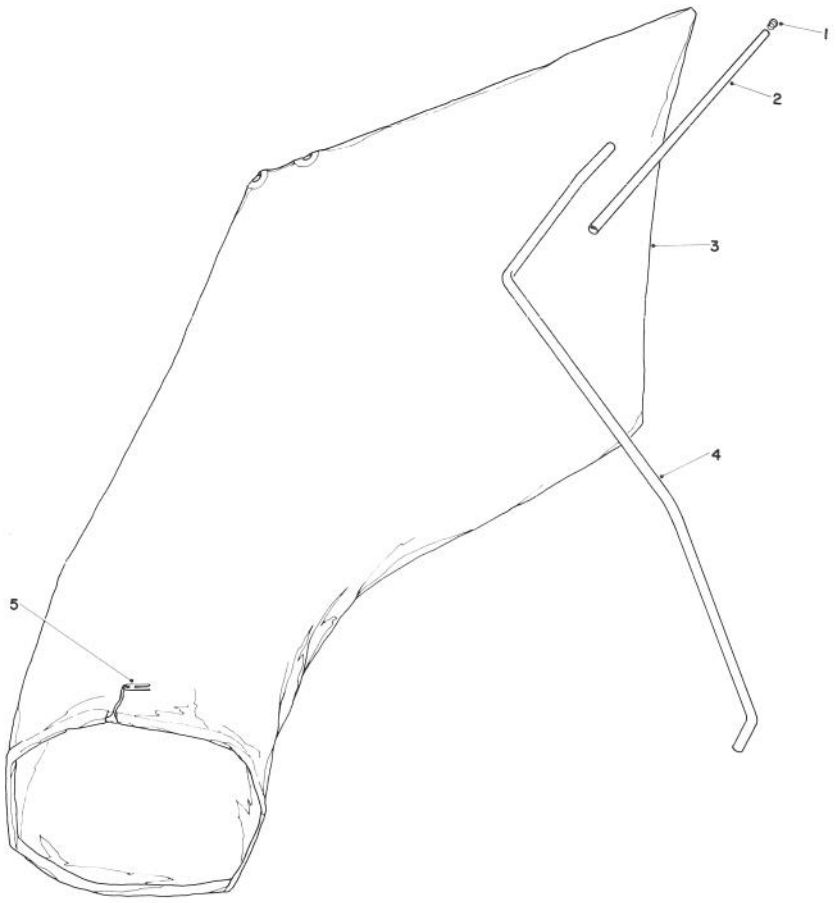

GIANT BAGGING KIT NO. 29-9750 (OPTIONAL)

Ref. No.	Part No.	Description	No. Used
1	2410-29	Cap	1
2	29-7000	Tube 25"	1
3	8-4719	Bag (Incl. Ref. #5)	1

Ref. No.	Part No.	Description	No. Used
4	22-4820	Hanger Rod	1
5	3-2781	Bag Cord Fasteners	1

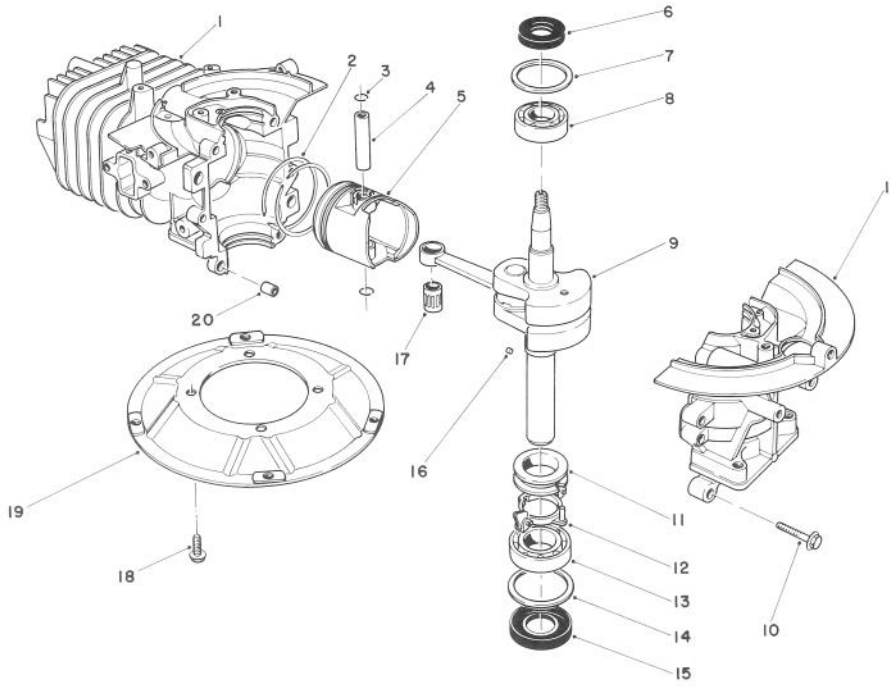

CRANKSHAFT ASSEMBLY

Ref. No.	Part No.	Description	No. Used
1	81-2060	Crankcase/Cylinder Assy.	1
2	81-0590	Ring Set	1
3	81-0620	Circlip	2
4	81-0600	Pin — Wrist	1
5	81-0580	Piston (58 mm)	1
6	81-0720	Oil Seal — Upper	1
7	81-0710	Thrust Washer — Upper	1
8	81-0690	Bearing — Upper (20 mm)	1
9	81-1550	Crankshaft/Connecting Rod Assembly	1
10	81-0540	Bolt (30 mm Lg.)	6

Ref. No.	Part No.	Description	No. Used
11	81-0770	Spacer — Governor	1
12	81-0750	Bracket — Governor Arm	1
13	81-0700	Bearing — Lower (25 mm)	1
14	81-0730	Thrust Washer — Lower	1
15	81-0740	Oil Seal — Lower	1
16	81-0760	Pin — Crankshaft	1
17	81-0610	Bearing — Wrist Pin	1
18	81-0570	Bolt (20 mm Lg.)	4
19	81-0560	Plate — Mounting	1
20	81-0520	Pin — Crankcase	2
*	11-6289	Short Block Assembly	1

*Not Illustrated

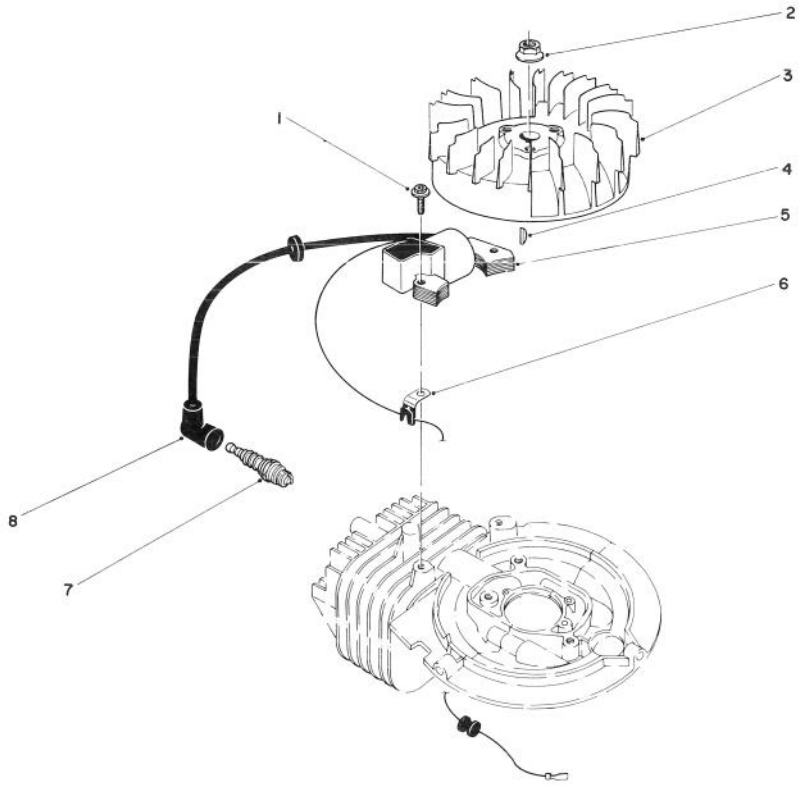

FLYWHEEL & MAGNETO ASSEMBLY

Ref. No.	Part No.	Description	No. Used
1	81-2050	Capscrew — Allenhead	2
2	81-1330	Nut	1
3	81-1980	Flywheel — Magneto	1
4	81-1320	Key — Flywheel	1
5	81-1990	Coil/Ignition Assembly	

Ref. No.	Part No.	Description	No. Used
6	81-1480	Clamp	1
7	81-0181	Spark Plug	1
8	81-1500	Cover — Spark Plug	1
*	41-7650	Puller — Flywheel	1

*Not Illustrated

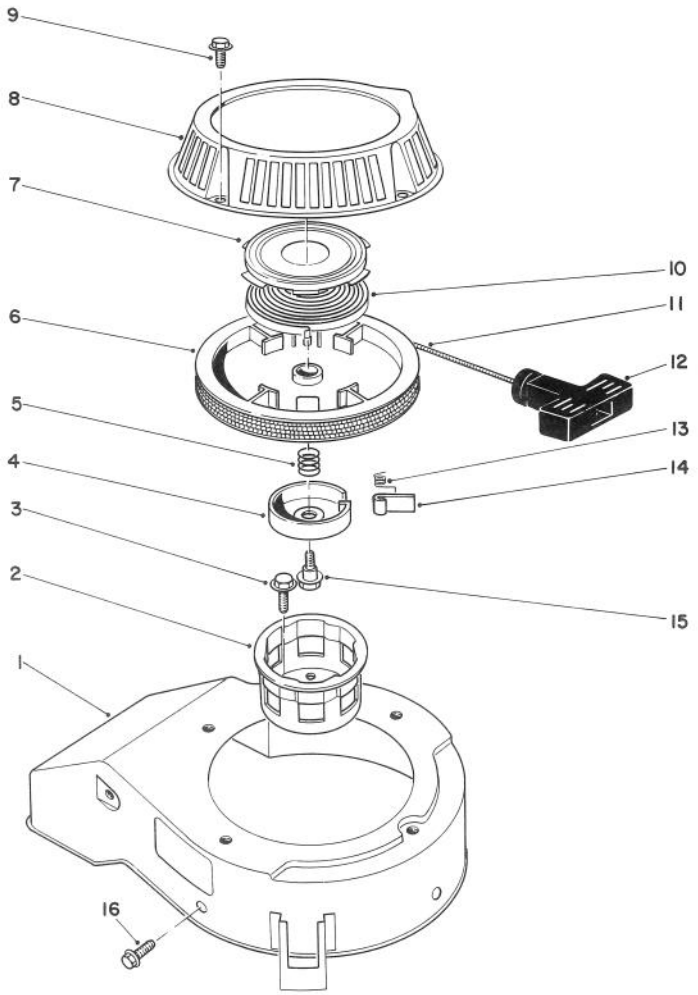

RECOIL ASSEMBLY

Ref. No.	Part No.	Description	No. Used
1	81-2070	Cover — Cooling Fan	1
2	81-1290	Cup — Starter Pulley	1
3	81-1300	Bolt (16 mm Lg.)	3
4	81-1250	Retainer — Dog	1
5	81-1240	Spring — Compression	1
6	81-1210	Reel — Rope Pulley	1
7	81-1640	Retainer — Recoil Spring	1
8	81-2090	Case — Recoil	1
9	81-1280	Bolt (10 mm Lg.)	4
10	81-1200	Spring — Recoil	1
11	81-1270	Rope	1

Ref. No.	Part No.	Description	No. Used
12	81-1630	Handle — Recoil	1
13	81-1220	Spring — Dog	1
14	81-1230	Dog	1
15	81-1260	Bolt — Shoulder	1
16	81-1170	Bolt — Self Tapping (15 mm Lg.)	3
*	47-2480	Stop — Rope	1
*	81-2300	Spring & Retainer (Incl. Ref. #7 & 10)	1
*	81-2040	Starter Assembly (Incl. Ref. #4-8, 10-15)	1

*Not Illustrated

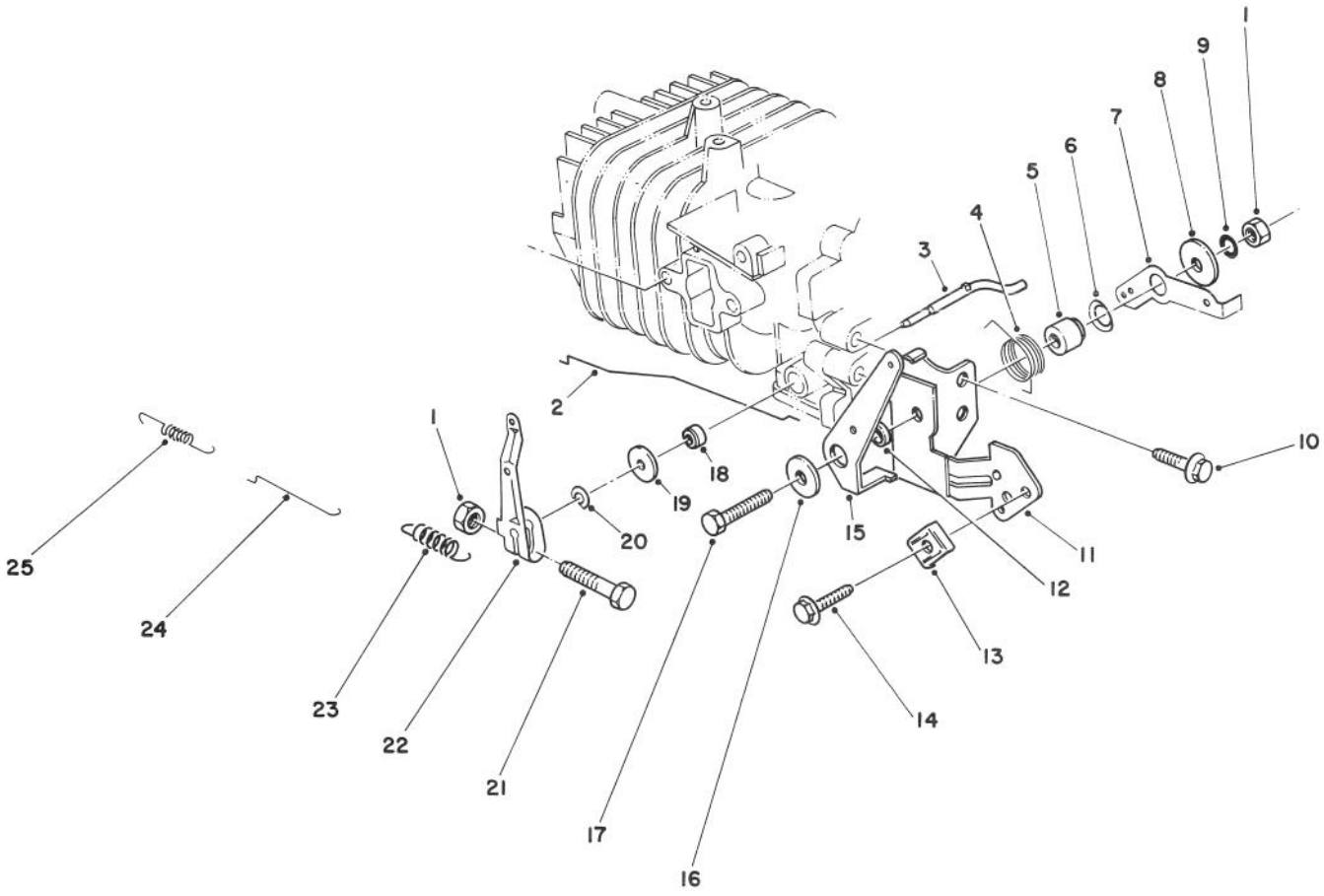

GOVERNOR ASSEMBLY

Ref. No.	Part No.	Description	No. Used
1	81-0900	Nut	2
2	81-1720	Rod — Choke	1
3	81-0840	Shaft — Governor	1
4	81-2460	Spring — Choke Control Lever	1
5	81-1770	Spacer — Governor Spring Lever	1
6	81-1820	Washer — Governor Spring Lever	1
7	81-1670	Lever — Governor Spring	1
8	81-1750	Washer — Choke Control Lever	1
9	81-1450	Washer — Lock	1
10	81-1170	Bolt — Self Tap (15 mm Lg.)	1
11	81-2420	Bracket — Throttle Control	1
12	81-2470	Spacer — Choke Control Lever	1

Ref. No.	Part No.	Description	No. Used
13	81-2430	Clamp — Cable	1
14	50-0130	Bolt — Cable Clamp	1
15	81-1710	Lever — Choke Control	1
16	50-0760	Washer — Choke Control Lever	1
17	81-1730	Bolt — Throttle Control Bracket	1
18	81-0850	Oil Seal — Governor Shaft	1
19	81-0860	Washer	1
20	81-0870	E-Ring	1
21	81-0890	Bolt — Throttle Lever	1
22	81-0880	Lever — Throttle Control	1
23	81-1970	Spring — Governor	1
24	81-0910	Rod — Carburetor	1
25	81-0920	Spring — Carburetor Rod	1

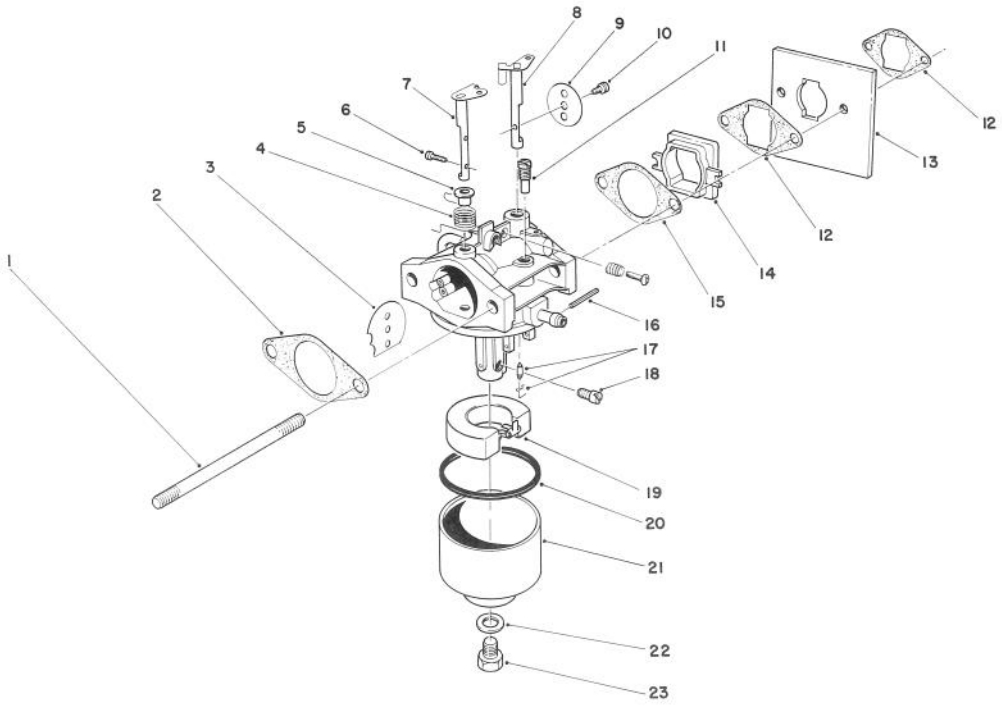

CARBURETOR ASSEMBLY

Ref. No.	Part No.	Description	No. Used
1	81-2240	Stud Bolt — Carburetor	2
2	81-0090	Gasket	1
3	81-0240	Valve — Choke	1
4	81-0230	Spring — Choke	1
5	81-0220	Bushing — Choke Valve	1
6	81-2160	Screw	2
7	81-1950	Shaft — Choke	1
8	81-0250	Shaft — Throttle	1
9	81-0260	Valve — Throttle	1
10	81-0270	Screw — Throttle Valve	1
11	81-1030	Jet — Pilot (40)	1
12	81-2320	Gasket — Shield	2
13	81-2330	Shield — Carburetor	1
14	81-2190	Insulator — Carburetor	1
15	81-0780	Gasket	1

Ref. No.	Part No.	Description	No. Used
16	81-0980	Pin	1
17	81-1600	Needle Valve/Spring Wire	1
18	81-1940	Jet — Main (76.3)	1
*	81-2340	Jet Main (72.5) High Altitude, Above 6,000 Ft. (Optional)	1
19	81-0970	Float	1
20	81-1010	Gasket — Float Bowl	1
21	81-1610	Bowl — Float	1
22	81-1020	Gasket — Bowl Screw	1
23	81-1000	Screw — Bowl	1
*	81-1960	Carburetor Kit (Incl. Ref. #2, 15, 17, 20 & 22)	1
*	81-1930	Carburetor Assembly — Complete	1

*Not Illustrated

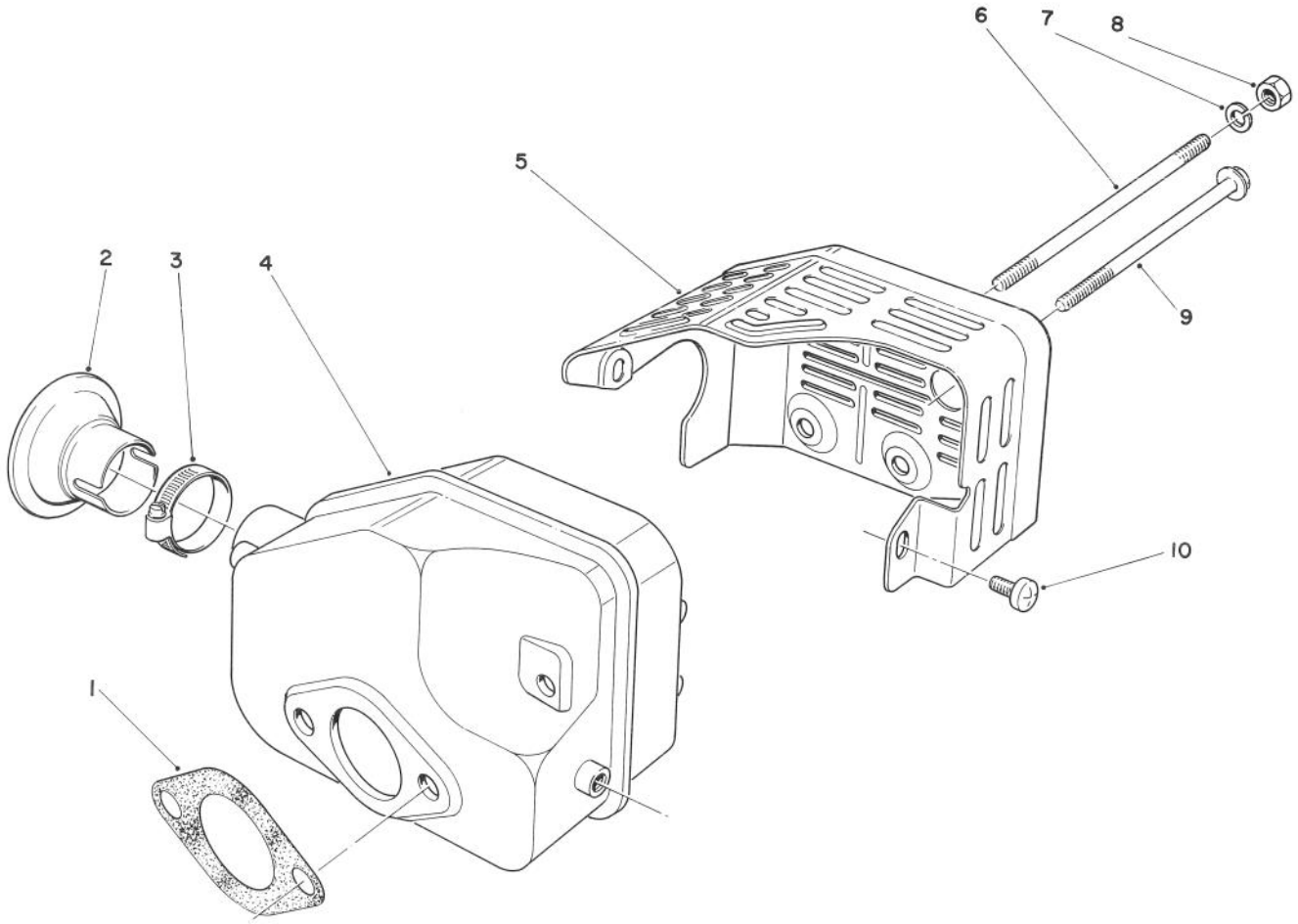

MUFFLER ASSEMBLY

Ref. No.	Part No.	Description	No. Used
1	81-1080	Gasket — Muffler	1
2*	81-0200	Spark Arrester	1
3†		Clamp	1
4	81-1090	Muffler	1
5	81-1130	Cover — Muffler	1

Ref. No.	Part No.	Description	No. Used
6	81-1100	Bolt	2
7	81-1120	Washer — Lock	2
8	81-1110	Nut	2
9	81-1150	Bolt — Self Tapping	1
10	81-1140	Screw — Phillips Hd.	2

*Optional Equipment
†Obtain Locally