Form No. 3351–445

Reelmaster® 5500–D

2 and 4 Wheel Drive Traction Units

Model No. 03550—240000001 and Up

Model No. 03551—240000001 and Up

Operator’s Manual

CE

English (EN, GB)

Warning

CALIFORNIA

Proposition 65 Warning

Diesel engine exhaust and some of its constituents are known to the State of California to cause cancer, birth defects, and other reproductive harm.

Important The engine in this product is not equipped with a spark arrester muffler. It is a violation of California Public Resource Code Section 4442 to use or operate this engine on any forest-covered, brush-covered, or grass-covered land as defined in CPRC 4126. Other states or federal areas may have similar laws.

Contents

	Page
Introduction	3
Safety	3
Safe Operating Practices	3
Toro Riding Mower Safety	5
Sound Pressure Level	6
Vibration Level	6
Safety and Instruction Decals	7
General Specifications	12
Measurements	13
Optional Equipment	13
Setup	14
Connecting the Battery	15
Mounting the Hood Latch	16
Replacing the Floor Panel Fastener	16
Checking the Tire Pressure	16
Installing the Cutting Units	16
Alternate the Adjustments	18
Adjusting the Cutting Unit Stabilizer	19
Rear Ballast	19
Before Operating	20
Checking the Engine Oil	20
Checking the Cooling System	20
Filling the Fuel Tank	21
Checking the Transmission Fluid	21
Checking the Hydraulic Fluid	21
Checking the Rear Axle Lubricant	22
Checking the Reel to Bedknife Contact	22
Check the Torque of the Wheel Nuts	22
Operation	23
Controls	23
Starting and Stopping	25
Bleeding the Fuel System	25
Setting the Reel Speed	25
Adjusting the Rear Lift Arm Counterbalance	26
Towing the Traction Unit	27
Diagnostic Light	27
Diagnostic ACE Display	28
Checking the Interlock Switches	28
Hydraulic Valve Solenoid Functions	29
Operating Characteristics	30
Maintenance	31
Recommended Maintenance Schedule	31
Lubricating the Mower	32
Service Interval Chart	34
Daily Maintenance Checklist	35
Servicing the Air Cleaner	35
Servicing the Engine Oil and Filter	36
Servicing the Fuel System	37
Replacing the Fuel Pre Filter	37
Bleeding Air from the Injectors	38
Servicing the Engine Cooling System	38
Servicing the Engine Belts	39
Adjusting the Throttle	40
Changing the Hydraulic Fluid	40
Replacing the Hydraulic Filter	40
Checking Hydraulic Lines And Hoses	41
Using the Hydraulic System Test Ports	41
Adjusting Traction Drive For Neutral	41
Adjusting the Cutting Unit Drop Rate	42
Checking and Adjusting Traction Linkage	43
Hydraulic Schematic	44
Adjusting the Service Brakes	45
Changing the Transmission Fluid	45
Replacing the Transmission Filter	45
Changing Rear Axle Lubricant	46
Checking and Adjusting the Rear Wheel Toe–In	46
Servicing the Battery	46
Servicing the Fuses	47
Adjusting the Parking Brake Switch	47
Installing Optional Lighting	47
Wiring Diagram	48
Backlapping	49
Maintaining the Cutting Unit	50
Storage	51
Traction Unit	51
Engine	51
The Toro General Commercial Products Warranty	52

© 2004 by The Toro Company
8111 Lyndale Avenue South
Bloomington, MN 55420-1196

All Rights Reserved
Printed in the USA

Introduction

Read this manual carefully to learn how to operate and maintain your product properly. The information in this manual can help you and others avoid injury and product damage. Although Toro designs and produces safe products, you are responsible for operating the product properly and safely.

Whenever you need service, genuine Toro parts, or additional information, contact an Authorized Service Dealer or Toro Customer Service and have the model and serial numbers of your product ready. Figure 1 illustrates the location of the model and serial numbers on the product.

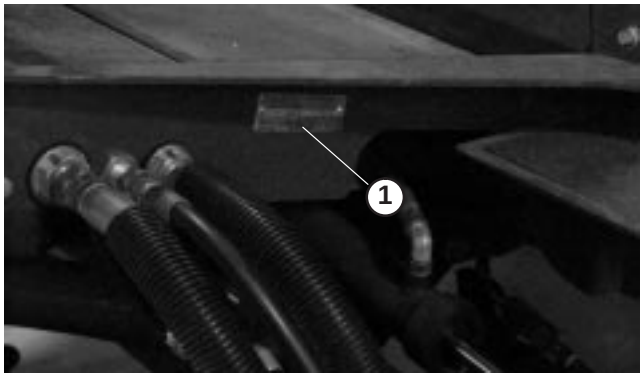

Figure 1

1. Location of the model and serial numbers

Write the product model and serial numbers in the space below:

Model No. _____

Serial No. _____

This manual identifies potential hazards and has special safety messages that help you and others avoid personal injury and even death. ***Danger***, ***Warning***, and ***Caution*** are signal words used to identify the level of hazard. However, regardless of the hazard, be extremely careful.

Danger signals an extreme hazard that *will* cause serious injury or death if you do not follow the recommended precautions.

Warning signals a hazard that *may* cause serious injury or death if you do not follow the recommended precautions.

Caution signals a hazard that may cause minor or moderate injury if you do not follow the recommended precautions.

This manual uses two other words to highlight information. **Important** calls attention to special mechanical information and **Note:** emphasizes general information worthy of special attention.

Safety

This machine meets or exceeds CEN standard EN 836:1997, ISO standard 5395:1990, and ANSI B71.4-1999 specifications in effect at the time of production when 40 lb. (18 kg) of ballast is added to the rear wheel.

Improper use or maintenance by the operator or owner can result in injury. To reduce the potential for injury, comply with these safety instructions and always pay attention to the safety alert ⚠ symbol, which means CAUTION, WARNING, or DANGER—"personal safety instruction." Failure to comply with the instruction may result in personal injury or death.

Safe Operating Practices

The following instructions are from the CEN standard EN 836:1997, ISO standard 5395:1990, and ANSI B71.4-1999.

Training

- Read the operator's manual and other training material carefully. Be familiar with the controls, safety signs, and the proper use of the equipment.
- Never allow children or people unfamiliar with these instructions to use or service the mower. Local regulations may restrict the age of the operator.
- Never mow while people, especially children, or pets are nearby.
- Keep in mind that the operator or user is responsible for accidents or hazards occurring to other people or their property.
- Do not carry passengers.
- All drivers and mechanics should seek and obtain professional and practical instruction. The owner is responsible for training the users. Such instruction should emphasize:
  - the need for care and concentration when working with ride-on machines;
  - control of a ride-on machine sliding on a slope will not be regained by the application of the brake. The main reasons for loss of control are:
    - insufficient wheel grip;

- being driven too fast;
- inadequate braking;
- the type of machine is unsuitable for its task;
- lack of awareness of the effect of ground conditions, especially slopes;
- incorrect hitching and load distribution.

- The owner/user can prevent and is responsible for accidents or injuries occurring to himself or herself, other people, or property.

Preparation

- While mowing, always wear substantial footwear, long trousers, hard hat, safety glasses, and ear protection. Long hair, loose clothing, or jewelry may get tangled in moving parts. Do not operate the equipment when barefoot or wearing open sandals.
- Thoroughly inspect the area where the equipment is to be used and remove all objects which may be thrown by the machine.
- **Warning**—Fuel is highly flammable. Take the following precautions:
  - Store fuel in containers specifically designed for this purpose.
  - Refuel outdoors only and do not smoke while refuelling.
  - Add fuel before starting the engine. Never remove the cap of the fuel tank or add fuel while the engine is running or when the engine is hot.
  - If fuel is spilled, do not attempt to start the engine but move the machine away from the area of spillage and avoid creating any source of ignition until fuel vapors have dissipated.
  - Replace all fuel tanks and container caps securely.
- Replace faulty silencers/mufflers.
- Evaluate the terrain to determine what accessories and attachments are needed to properly and safely perform the job. Only use accessories and attachments approved by the manufacturer.
- Check that operator's presence controls, safety switches and shields are attached and functioning properly. Do not operate unless they are functioning properly.

Operation

- Do not operate the engine in a confined space where dangerous carbon monoxide fumes can collect.
- Mow only in daylight or in good artificial light.
- Before attempting to start the engine, disengage all blade attachment clutches, shift into neutral, and engage the parking brake.
- Remember there is no such thing as a safe slope. Travel on grass slopes requires particular care. To guard against overturning:
  - do not stop or start suddenly when going up or downhill;
  - engage clutch slowly, always keep machine in gear, especially when travelling downhill;
  - machine speeds should be kept low on slopes and during tight turns;
  - stay alert for humps and hollows and other hidden hazards;
  - never mow across the face of the slope, unless the mower is designed for this purpose.
- Stay alert for holes in the terrain and other hidden hazards.
- Use care when pulling loads or using heavy equipment.
  - Use only approved drawbar hitch points.
  - Limit loads to those you can safely control.
  - Do not turn sharply. Use care when reversing.
  - Use counterweight(s) or wheel weights when suggested in the operator's manual.
- Watch out for traffic when crossing or near roadways.
- Stop the blades rotating before crossing surfaces other than grass.
- When using any attachments, never direct discharge of material toward bystanders nor allow anyone near the machine while in operation.
- Never operate the machine with damaged guards, shields, or without safety protective devices in place. Be sure all interlocks are attached, adjusted properly, and functioning properly.
- Do not change the engine governor settings or overspeed the engine. Operating the engine at excessive speed may increase the hazard of personal injury.
- Before leaving the operator's position:
  - stop on level ground;
  - disengage the power take-off and lower the attachments;
  - change into neutral and set the parking brake;
  - stop the engine and remove the key.
- Disengage drive to attachments when transporting or not in use.

- Stop the engine and disengage drive to attachment
  - before refuelling;
  - before removing the grass catcher/catchers;
  - before making height adjustment unless adjustment can be made from the operator's position.
  - before clearing blockages;
  - before checking, cleaning or working on the mower;
  - after striking a foreign object or if an abnormal vibration occurs. Inspect the mower for damage and make repairs before restarting and operating the equipment.
- Reduce the throttle setting during engine run-out and, if the engine is provided with a shut-off valve, turn the fuel off at the conclusion of mowing.
- Keep hands and feet away from the cutting units.
- Look behind and down before backing up to be sure of a clear path.
- Slow down and use caution when making turns and crossing roads and sidewalks. Stop cylinders/reels if not mowing.
- Do not operate the mower under the influence of alcohol or drugs
- Use care when loading or unloading the machine into a trailer or truck
- Use care when approaching blind corners, shrubs, trees, or other objects that may obscure vision.

Maintenance and Storage

- Keep all nuts, bolts and screws tight to be sure the equipment is in safe working condition.
- Never store the equipment with fuel in the tank inside a building where fumes may reach an open flame or spark.
- Allow the engine to cool before storing in any enclosure.
- To reduce the fire hazard, keep the engine, silencer/muffler, battery compartment and fuel storage area free of grass, leaves, or excessive grease.
- Check the grass catcher frequently for wear or deterioration.
- Keep all parts in good working condition and all hardware and hydraulic fittings tightened. Replace all worn or damaged parts and decals.
- If the fuel tank has to be drained, do this outdoors.
- Be careful during adjustment of the machine to prevent entrapment of the fingers between moving blades and fixed parts of the machine.
- On multi-cylinder/multi-reel machines, take care as rotating one cylinder/reel can cause other cylinders/reels to rotate.
- Disengage drives, lower the cutting units, set parking brake, stop engine and remove key and disconnect spark plug wire. Wait for all movement to stop before adjusting, cleaning or repairing.
- Clean grass and debris from cutting units, drives, silencers/mufflers, and engine to help prevent fires. Clean up oil or fuel spillage.
- Use jack stands to support components when required.
- Carefully release pressure from components with stored energy.
- Disconnect battery and remove spark plug wire before making any repairs. Disconnect the negative terminal first and the positive last. Reconnect positive first and negative last.
- Use care when checking the cylinders/reels. Wear gloves and use caution when servicing them.
- Keep hands and feet away from moving parts. If possible, do not make adjustments with the engine running.
- Charge batteries in an open well ventilated area, away from spark and flames. Unplug charger before connecting or disconnecting from battery. Wear protective clothing and use insulated tools.

Toro Riding Mower Safety

The following list contains safety information specific to Toro products or other safety information that you must know that is not included in the CEN, ISO, or ANSI standard.

This product is capable of amputating hands and feet and throwing objects. Always follow all safety instructions to avoid serious injury or death.

Use of this product for purposes other than its intended use could prove dangerous to user and bystanders.

Warning

Engine exhaust contains carbon monoxide, which is an odorless, deadly poison that can kill you.

Do not run engine indoors or in an enclosed area.

- Know how to stop the engine quickly.

- Do not operate the machine while wearing tennis shoes or sneakers.
- Wearing safety shoes and long pants is advisable and required by some local ordinances and insurance regulations.
- Handle fuel carefully. Wipe up any spills.
- Check the safety interlock switches daily for proper operation. If a switch should fail, replace the switch before operating the machine. After every two years, replace all four interlock switches in the safety system, whether they are working properly or not.
- Before starting the engine, sit on the seat.
- Using the machine demands attention. To prevent loss of control:
  - Do not drive close to sand traps, ditches, creeks, or other hazards.
  - Reduce speed when making sharp turns. Avoid sudden stops and starts.
  - When near or crossing roads, always yield the right-of-way.
  - Apply the service brakes when going downhill to keep forward speed slow and to maintain control of the machine.
- The grass baskets must be in place during operation of the cylinders/reels or thatchers for maximum safety. Shut the engine off before emptying the baskets.
- Raise the cutting units when driving from one work area to another.
- Do not touch the engine, silencer/muffler, or exhaust pipe while the engine is running or soon after it has stopped because these areas could be hot enough to cause burns.
- Stay clear of the rotating screen at the side of the engine to prevent direct contact with your body or clothing.
- If the engine stalls or loses headway and cannot make it to the top of a slope, do not turn the machine around. Always back slowly, straight down the slope.
- When a person or pet appears unexpectedly in or near the mowing area, **stop mowing.** Careless operation, combined with terrain angles, ricochets, or improperly positioned guards can lead to thrown object injuries. Do not resume mowing until the area is cleared.

Maintenance and Storage

- Make sure all hydraulic line connectors are tight and all hydraulic hoses and lines are in good condition before applying pressure to the system.
- Keep your body and hands away from pin hole leaks or nozzles that eject hydraulic fluid under high pressure. Use paper or cardboard, not your hands, to search for leaks. Hydraulic fluid escaping under pressure can have sufficient force to penetrate the skin and cause serious injury. Seek immediate medical attention if fluid is injected into skin.
- Before disconnecting or performing any work on the hydraulic system, all pressure in the system must be relieved by stopping the engine and lowering the cutting units and attachments to the ground.
- Check all fuel lines for tightness and wear on a regular basis. Tighten or repair them as needed.
- If the engine must be running to perform a maintenance adjustment, keep hands, feet, clothing, and any parts of the body away from the cutting units, attachments, and any moving parts, especially the screen at the side of the engine. Keep everyone away.
- To ensure safety and accuracy, have an Authorized Toro Distributor check the maximum engine speed with a tachometer. Maximum governed engine speed should be 2900 RPM.
- If major repairs are ever needed or if assistance is desired, contact an Authorized Toro Distributor.
- Use only Toro-approved attachments and replacement parts. The warranty may be voided if used with unapproved attachments.

Sound Pressure Level

This unit has an equivalent continuous A–weighted sound pressure level at the operator ear of 82 dBA, based on measurements of identical machines per Directive 98/37/EC and amendments.

Vibration Level

This unit does not exceed a vibration level of 2.5 m/s^2 at the hands based on measurements of identical machines per ISO 5349 procedures.

This unit does not exceed a vibration level of 0.5 m/s^2 at the posterior based on measurements of identical machines per ISO 2631 procedures.

Safety and Instruction Decals

Safety decals and instructions are easily visible to the operator and are located near any area of potential danger. Replace any decal that is damaged or lost.



93-6680

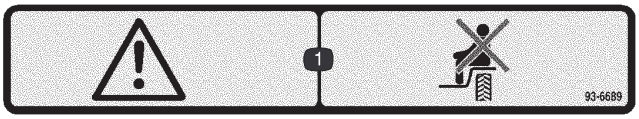

93-6689

1. Warning—do not carry passengers.

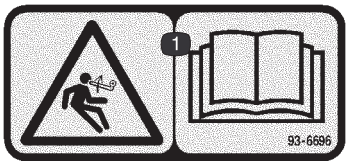

93-6696

1. Stored energy hazard—read the *Operator's Manual.*



93-6686

1. Hydraulic oil
2. Read the *Operator's Manual.*



93-6687

1. Do not step here.



93-6697
(Model 03551 only)

1. Read the *Operator's Manual.*
2. Add SAE 80w–90 (API GL-5) oil every 50 hours.

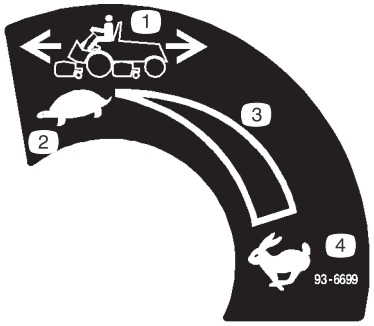

93-6699

1. Machine speed
2. Slow
3. Continuous variable setting
4. Fast

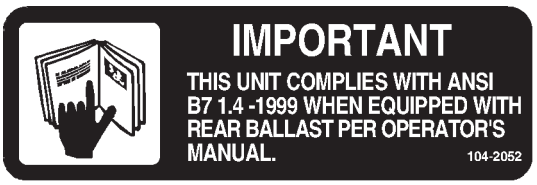

104-2052

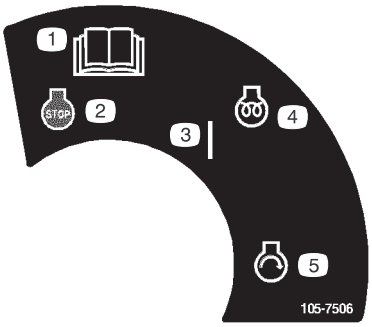

105-7506

1. Read the *Operator's Manual*
2. Engine—stop
3. On
4. Engine—preheat
5. Engine—start



104-9298

1. Read the *Operator's Manual.*

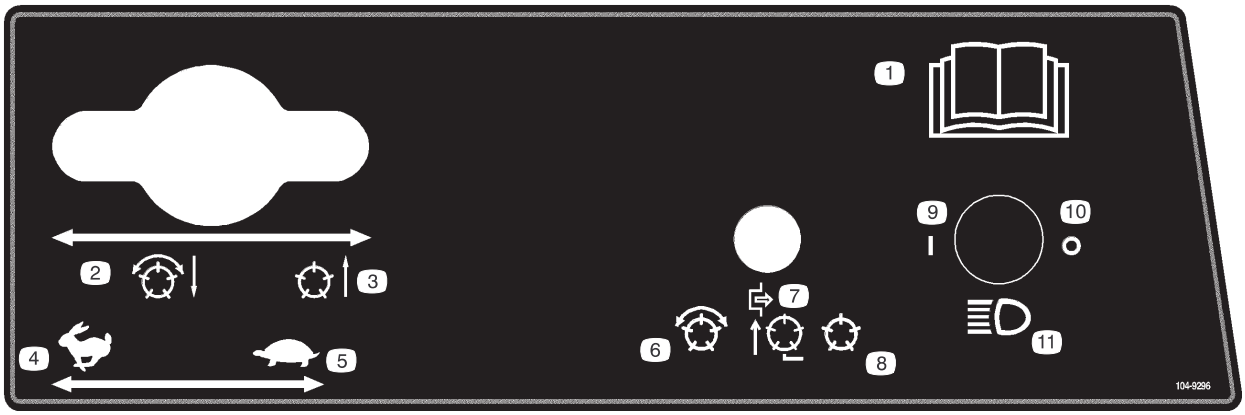

104-9296

1. Read the *Operator's Manual.*
2. Lower and engage the reels.
3. Raise and disengage the reels.
4. Fast
5. Slow
6. Enable the reels
7. Disable and raise the reels
8. Disable the reels
9. On
10. Off
11. Headlights

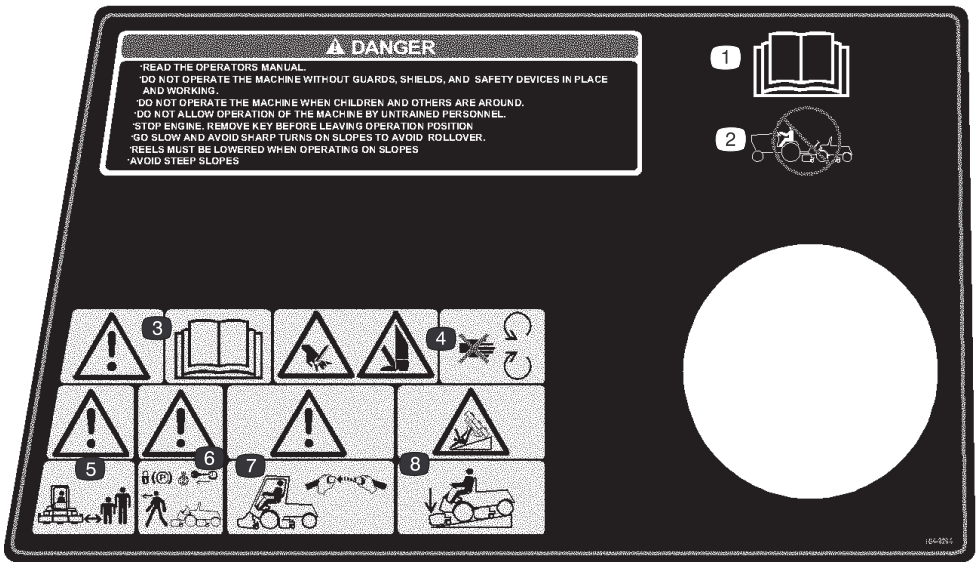

104-9294

1. Read the *Operator's Manual.*
2. Do not tow the machine.
3. Warning—read the *Operator's Manual.*
4. Cutting hazard of hand or foot—stay away from moving parts.
5. Warning—keep bystanders a safe distance from the machine.
6. Warning—lock the parking brake, stop the engine, and remove the ignition key before leaving the machine.
7. Warning—use a roll over protection system and wear the seat belt.
8. Tipping hazard—lower the cutting unit when driving down slopes.

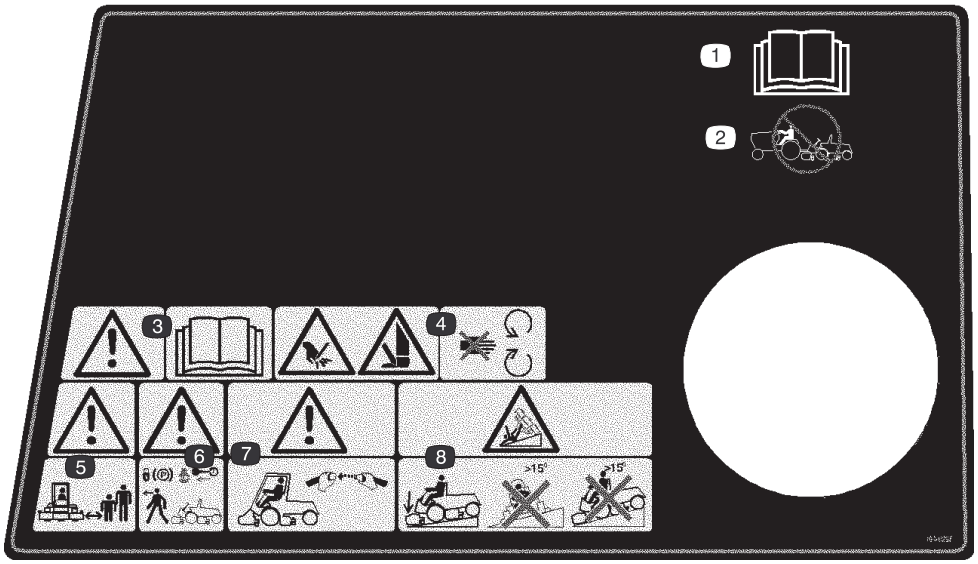

104-9295
Replaces 104–9294 for CE

1. Read the *Operator's Manual.*
2. Do not tow the machine.
3. Warning—read the *Operator's Manual.*
4. Cutting hazard of hand or foot—stay away from moving parts.
5. Warning—keep bystanders a safe distance from the machine.
6. Warning—lock the parking brake, stop the engine, and remove the ignition key before leaving the machine.
7. Warning—use a roll over protection system and wear the seat belt.
8. Tipping hazard—lower the cutting unit when driving down slopes and do not drive across or down slopes greater than 15 degrees.

REELMASTER 5200-D
5400-D / 5500-D
QUICK REFERENCE AID

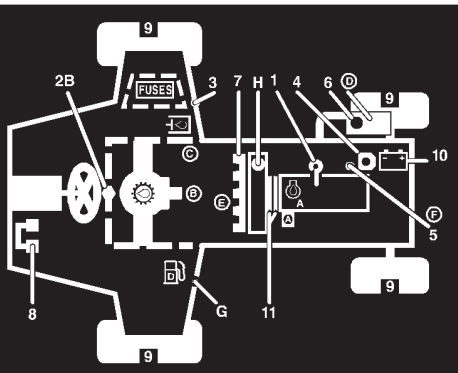

CHECK/SERVICE (daily)

1. OIL LEVEL, ENGINE
2. OIL LEVEL, TRANSMISSION
3. OIL LEVEL, HYDRAULIC TANK
4. COOLANT LEVEL, RADIATOR
5. FUEL /WATER SEPARATOR
6. PRECLEANER -- AIR CLEANER
7. RADIATOR SCREEN
8. BRAKE FUNCTION
9. TIRE PRESSURE
10. BATTERY
11. BELTS (FAN, ALT.)

GREASING -- SEE OPERATOR'S MANUAL

FLUID SPECIFICATIONS/CHANGE INTERVALS

SEE OPERATOR'S MANUAL FOR INITIAL CHANGES.	FLUID TYPE	CAPACITY	CHANGE INTERVAL		FILTER PART NO.
			FLUID	FILTER	
A. ENGINE OIL	SAE 10W-30CD	4.0 QTS.*	50 HRS.	100 HRS.	104-5167
B. TRANSMISSION OIL	MOBIL 424	5 QTS.*	800 HRS.	800 HRS.	75-1330
C. HYD. CIRCUIT OIL	MOBIL 424	8.5 GALS.*	800 HRS.	SEE INDICATOR	75-1310 (RM52/5400) 94-2621 (RM5500)
D. AIR CLEANER				400 HRS.	98-9763
E. FILTER, IN-LINE FUEL				400 HRS.	98-7612
F. WATER SEPARATOR				400 HRS.	98-9764
G. FUEL TANK	NO. 2-Diesel	10 GALS.	Drain and flush, 2 yrs.		
H. COOLANT	50/50 Ethylene glycol/water	9.6 QTS.	Drain and flush, 2 yrs.		

* INCLUDING FILTER

107-8841

107-8841



93-6691

1. Read the *Operator's Manual.*

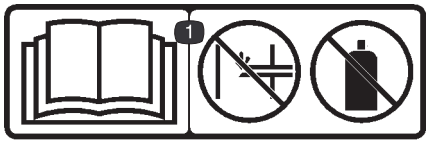

93-6692

1. Read the *Operator's Manual*—do not prime or use starting fluid.



93-8060

1. Warning—read the *Operator's Manual.*
2. Cutting hazard of and or foot—wait for moving parts to stop.
3. For backlapping, set the parking brake and move the throttle lever to Slow (do not change the engine speed while the reels are running).

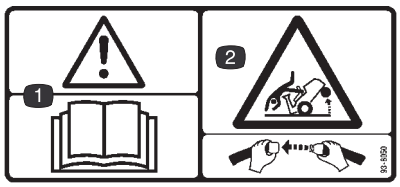

93-8050
(Model 03551 only)

1. Warning—read the *Operator's Manual.*
2. Tipping hazard—wear the seatbelt.

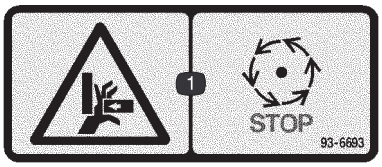

93-6693

1. Crushing hazard of hand—wait for moving parts to stop.

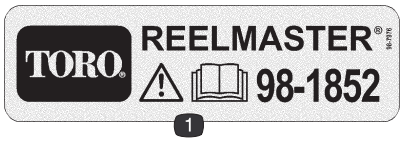

98-7976

1. Warning—read the *Operator's Manual.*

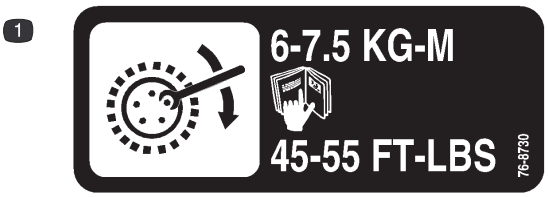

76-8730

1. Torque the lug nuts to 6–7.5 Kg-m (45–55 ft-lb); read the *Operator's Manual.*

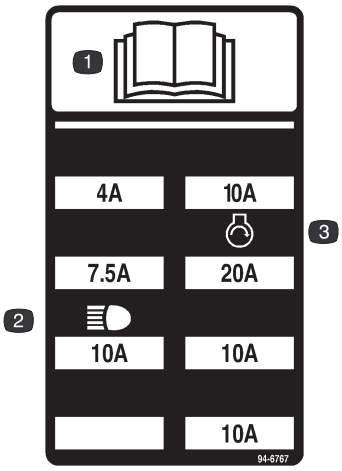

94-6767

1. Read the *Operator's Manual.*
2. Headlights
3. Engine-start

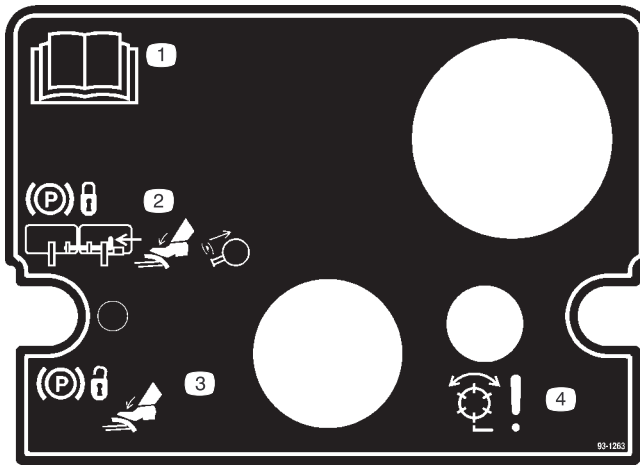

93-1263

1. Read the *Operator's Manual.*
2. To lock the parking brake, secure the brake pedals with the locking pin, press the brake pedals, and pull out the parking brake knob.
3. To unlock the parking brake, press the brake pedal.
4. Reel failure/malfunction



Battery Symbols

Some or all of these symbols are on your battery.

1. Explosion hazard
2. No fire, open flames, or smoking.
3. Caustic liquid/chemical burn hazard
4. Wear eye protection
5. Read the *Operator's Manual.*
6. Keep bystanders a safe distance from the battery.
7. Wear eye protection; explosive gases can cause blindness and other injuries
8. Battery acid can cause blindness or severe burns.
9. Flush eyes immediately with water and get medical help fast.
10. Contains lead; do not discard.

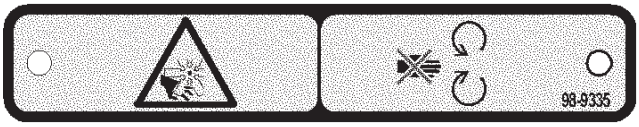

98-9335

1. Cutting/dismemberment hazard, fan—stay away from moving parts.

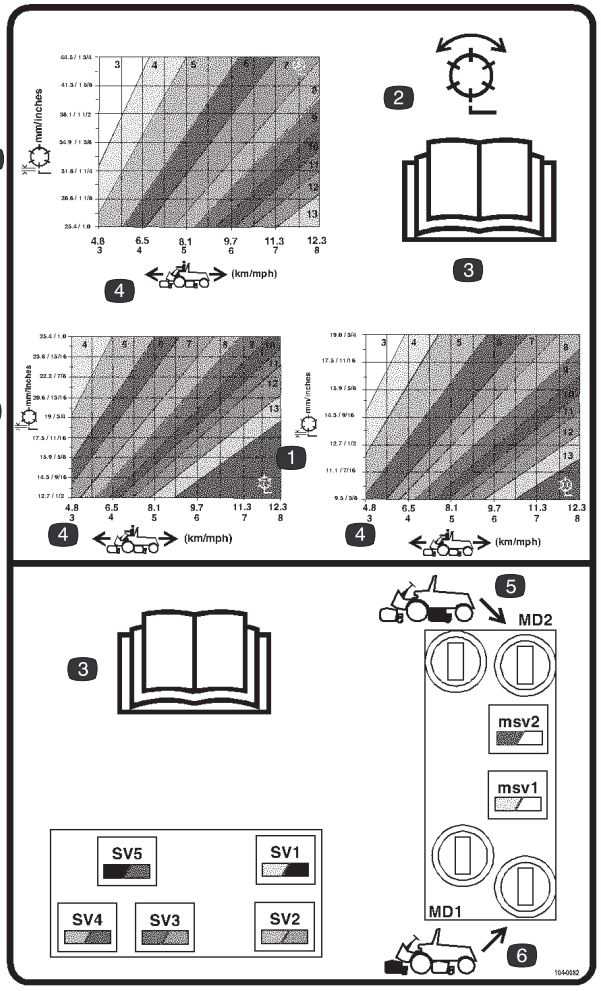

104-0082

1. Reel—height of cut
2. Reel—mow and backlap
3. Read the *Operator's Manual.*
4. Machine speed
5. Rear reels circuit controls
6. Front reels circuit controls

General Specifications

Engine	Kubota three cylinder, 4 cycle, liquid cooled, turbo diesel engine. 35 hp @ 3000 rpm. Governed to 3200 rpm. 68—1/2 cubic inch (1123 cc) displacement. Heavy duty, 3-stage, remote mounted air cleaner. High water temperature shutdown switch.
Main frame	All welded formed steel frame, includes tie-down loops
Cooling system	Radiator capacity is approximately 240 ounces (9.4 l) of 50/50 mixture of ethylene glycol anti–freeze. Remote mounted 32 ounces (.9 l) expansion tank. Removeable oil cooler/radiator intake screen. Air to oil cooler, mounted to front of radiator, tips forward for cleaning.
Fuel system	Fuel tank capacity is 10 gallons (57 l) of #2 diesel fuel. Equipped with a fuel filter/water separator to capture water in the fuel.
Traction system	Foot pedal controls forward/reverse ground speed. Hydrostatic transmission mounted directly on a 20.9:1 ratio front axle. Axle/reservoir capacity is 160 ounces (4.7 l). Replaceable filter mounted directly on transmission housing. Model 03551 only—Mechanical rear axle is coupled to front axle by a driveshaft and overrunning clutch.
Ground speed	0–10 mph forward, 0–4 mph reverse
Cutting unit drive system	Reel motors feature quick disconnect for removal or installation onto cutting unit. Hydraulic fluid reservoir capacity is 8—1/2 gallons. System protected by a filter assembly with restriction bypass and service indicator.
Seat	Deluxe high back suspension seat with adjustable fore and aft travel, weight and height. Tool box at left side of seat.
Steering system	Power steering with dedicated power source
Tires	Two rear steering tires: 20 x 10.00-10, tubeless, 6-ply rating. Two front traction drive tires: 26.5 x 14.00-12 tubeless, 4-ply rating. Recommended tire pressure for front and rear tires is 10–15 psi.
Brakes	Individual drum type wheel brakes on front traction wheels. Brakes controlled by individual pedals operated by the left foot. Hydrostatic braking through traction drive.
Electrical features	Automotive type electrical system. 12 volt, maintenance free battery with 530 cold cranking Amps @ 0 degrees F. and 85 minute reserve capacity @ 85 degrees F. 40 amp alternator with I.C. regulator/rectifier. Seat switch, reel and traction interlock switches. An electronic controller monitors and controls safety and operational functions. Parking brake switch and individual circuit backlap switches.
Controls	Foot operated traction and brake pedals. Hand operated throttle, speed control lever, parking brake lock, ignition switch with automatic preheat cycle, single joy stick control for cutting unit on/off and lift lower. Cutting unit backlap controls and reel speed controls located under seat base.
Gauges	Hour meter, speedometer, fuel gauge, temperature gauge, 4 bank warning lamp: oil pressure, water temperature, amps, and glow plug.
Diagnostics	The Automatic Control Electronics, ACE™ system allows precise timing and control of machine functions for maximum reliability. Optional diagnostic display connects to an electronic control unit to pin point any electrical problems quickly and easily. Available DATA LOG™ system allows mechanic to find intermittent problems.

Measurements

Width-of-cut	100 inch (254 cm)
Overall width	
Transport	88 inch (224 cm)
Outside of front tires	87 inch (221 cm)
Outside of rear tires	52–1/2 inch (133 cm)
Overall length	
Without grass baskets	113 inch (287 cm)
With grass baskets	120 inch (305 cm)
Height	
Without ROPS installed	59 inch (150 cm)
With ROPS installed	82 inch (208 cm)
Recommended Height–of–cut	
5 Blade cutting unit	1 to 1–3/4 inch (26–44 mm)
7 Blade cutting unit	1/2 to 1 inch (13–26 mm)
11 Blade cutting unit	3/8 to 3/4 inch (10–19 cm)
Weight	
Model No. 03550	2962 lb. (1344 kg)*
Model No. 03551	3210 lb. 1456 kg)*

* With 7 blade cutting units and full fluid levels

Optional Equipment

5 Blade Cutting Unit (7 inch)	Model No. 03860
7 Blade Cutting Unit (7 inch)	Model No. 03861
11 Blade Cutting Unit (7 inch)	Model No. 03862
Dethatching Cutting Unit	Model No. 03871
Grass Basket Kit	Model No. 03882
Arm Rest Kit	Model No. 30707
4 Wheel Drive Kit (For use with model 03550 only)	Model No. 03538
Turf Defender™ Electronic Leak Detector	Model No. 03521
Precleaner Bowl Extension Tube (Clamp, part number 20–4840 required to install extension tube)	Part No. 43–3810
Diagnostic ACE Tool	Part No. 85–4750
Weight Kit	Part No. 94–2836
High Torque Reel Motor	Part No. 98-9998
Wiehle Roller Scraper	Part No. 100-9908
Basket Tipper Kit	Part No. 100-9945
Rear Roller Scraper Kit	Part No. 100–9920
Full Roller Scraper Kit	Part No. 99–8668
Shoulder Wiehle Roller	Part No. 100-9911
Shoulder Wiehle Scraper	Part No. 100-9913
Low Height–of–Cut Bedknife*	Part No. 93–9774
Gauge Bar Assembly (Supplied with machine)	Part No. 98-1852
Angle Indicator	Part No. 99-3503
Backlapping Brush Assembly	Part No. TOR299100
Bedknife Screw Tool	Part No. TOR510880
Cutting Unit Tool Kit	Part No. TOR4070
Reel Drive Adapter	Part No. TOR4074

* For height–of–cut below 1/2 inch (13mm)

Setup

Note: Determine the left and right sides of the machine from the normal operating position.

Note: Use this chart as a checklist to ensure that all parts necessary for assembly have been received. Without these parts, total set-up cannot be completed. Some parts may have already been assembled at the factory.

Description	Qty.	Use
Locking hood latch	1	Mounting the hood latch for CE
Lockwasher	1	
Nut	1	
Key	1	
Hood latch bracket	1	
Hood latch strap	1	
Capscrew, 1/4 x 3/4 inch	4	
Flat washer, 9/32 x 5/8 inch	4	
Locknut, 1/4 inch	4	
Capscrew, 3/8 x 1 inch	1	Attaching the tipper chains to the front cutting unit
Flange nut 1/4 inch	1	
Flange head capscrew, 5/16 x 5/8 inch	1	Replacing the floor panel fastener for CE
Counterweight	5	Mounting the counterweights and motors to cutting units
O–ring, large	10	
Lynch Pin	5	Mounting the cutting units to the traction unit
Steering Pin	5	
Diagnostic ACE display overlay	1	Use for diagnosing machine malfunctions
Guage bar	1	Use to set cutting units
Screws	2	
Wingnuts	2	
Hydraulic filter	1	Change filter after first 10 hours of operation
EEC decal	1	Affix to machine
EEC certificate	2	
Blank service decal	1	Affix to machine (International only)
Operator’s manual (traction unit)	2	Read before operating the machine.
Parts catalog	1	

Connecting the Battery

Warning

CALIFORNIA

Proposition 65 Warning

Battery posts, terminals, and related accessories contain lead and lead compounds, chemicals known to the State of California to cause cancer and reproductive harm. *Wash hands after handling.*

Warning

Battery terminals or metal tools could short against metal tractor components causing sparks. Sparks can cause the battery gasses to explode, resulting in personal injury.

- **When removing or installing the battery, do not allow the battery terminals to touch any metal parts of the machine.**
- **Do not allow metal tools to short between the battery terminals and metal parts of the machine.**

Warning

Incorrect battery cable routing could damage the tractor and cables causing sparks. Sparks can cause the battery gasses to explode, resulting in personal injury.

- **Always *disconnect* the negative (black) battery cable before disconnecting the positive (red) cable.**
- **Always *connect* the positive (red) battery cable before connecting the negative (black) cable.**

1. Open the hood.
2. Ensure battery is securely fastened in place and check battery charge with a hydrometer. If battery needs charging, be sure at least one battery cable, preferable the positive (+) cable, is disconnected from the battery before connecting the charger (Fig. 2).

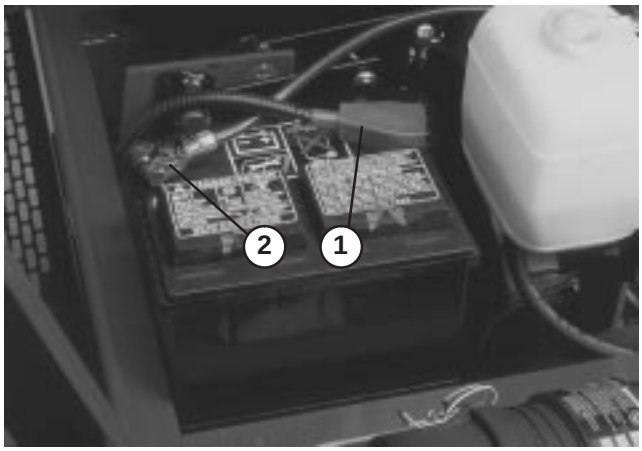

Figure 2

1. Positive battery cable
2. Negative battery cable

Danger

Battery electrolyte contains sulfuric acid which is a deadly poison and causes severe burns.

- **Do not drink electrolyte and avoid contact with skin, eyes or clothing. Wear safety glasses to shield your eyes and rubber gloves to protect your hands.**
- **Fill the battery where clean water is always available for flushing the skin.**

3. Slide the red, positive battery cable onto the positive battery post and tighten nut securely (Fig. 2).
4. If removed, slide the black, negative battery cable onto the negative battery post and tighten nut securely (Fig. 2).
5. Coat both battery connections with Grafo 112X (skin over) grease, Toro Part No. 505-47, petroleum jelly or light grease to prevent corrosion and slide rubber boot over positive terminal.
6. Close hood.

Mounting the Hood Latch

1. Remove plug from hole in left front corner of hood (Fig. 3).
2. Open the hood.

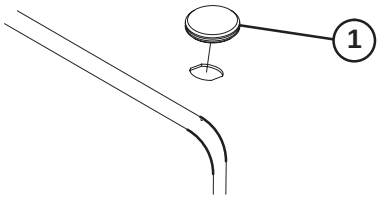

Figure 3

1. Hood plug

3. Mount locking latch to hood with lock washer and nut. Position switch with latch toward front of machine (Fig. 4).
4. Loosely mount latch strap to radiator support with 2 capscrews (1/4 x 3/4 inch), flat washers and locknuts (Fig. 4).

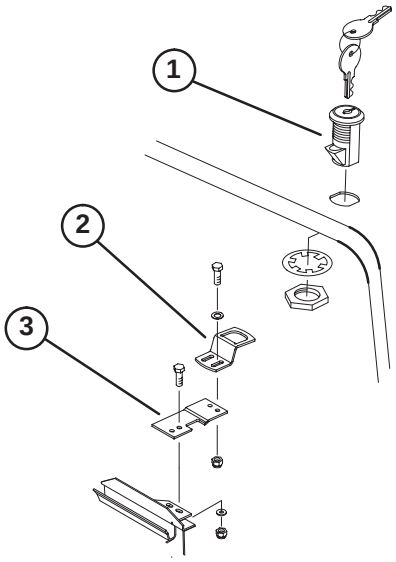

Figure 4

1. Locking latch
2. Latch bracket
3. Latch strap

5. Adjust latch bracket, until aligned with locking latch, then tighten capscrews.
6. Rotate latch to locked and unlocked position with key. Remove key and store in memorable place (Fig. 4).
7. Close the hood.

Replacing the Floor Panel Fastener (Required for CE)

1. Remove fastener securing left front corner of floor panel to frame (Fig. 5).
2. Replace with a flange head capscrew (5/16 x 5/8 inch) supplied in loose parts (Fig. 5).

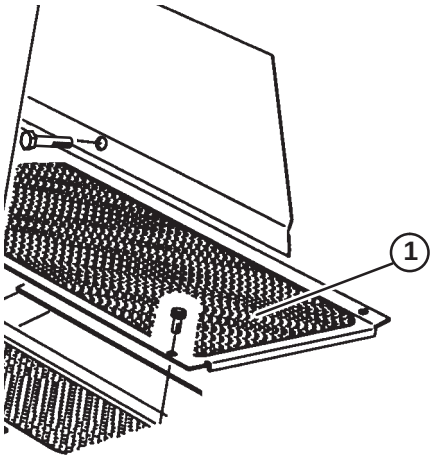

Figure 5

1. Floor panel

Checking the Tire Pressure

The tires are over–inflated for shipping. Therefore, release some of the air to reduce the pressure. Correct air pressure in the front and rear tires is 10-15 psi.

Important Maintain even pressure in all tires to assure uniform contact with turf.

Installing the Cutting Units

Cutting unit models 03860, 03861, and 03862 can be installed at any of the five mounting locations on the traction unit.

Figure 6 shows the orientation of the hydraulic drive motor for each of the five locations. For any of the locations requiring the motor to be mounted on the right end of the cutting unit, install a counter weight on the left end of the cutting unit. For the locations requiring the motor to be mounted on the left end, install a counter weight on the right end of the cutting unit.

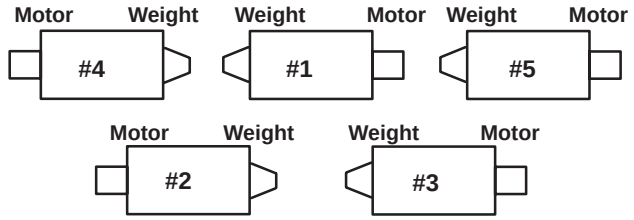

Figure 6

Note: Counter weight mounting capscrews are shipped installed on the right bearing housing of the cutting units. The capscrews on left bearing housing are to be used for securing the hydraulic motor.

1. Remove cutting units from cartons. Assemble and adjust per Cutting Unit Operator's Manual.

2. Remove protective plugs from each end of cutting unit.

3. Lubricate and install a large O-ring into bearing housing groove on each end of cutting unit (Fig. 7 & 10).

Note: Before installing cutting unit motors, lubricate internal splines of cutting unit reel shafts with grease.

4. Install a counter weight onto appropriate end of each cutting unit with capscrews provided (Fig. 7).

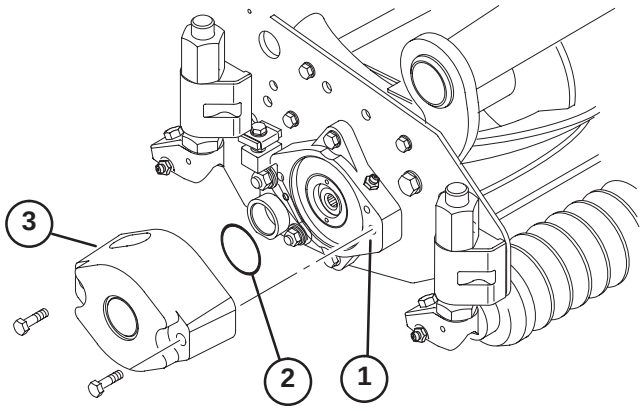

Figure 7

1. Bearing housing
2. O–ring—large
3. Counterweight

5. Thoroughly grease the cutting unit reel bearings prior to installation on the traction unit. Grease should be evident at the inboard reel seals. Refer to Cutting Unit Operator's Manual for greasing procedure.

6. Insert a thrust washer onto horizontal shaft of pivot knuckle as shown in Figure 8.

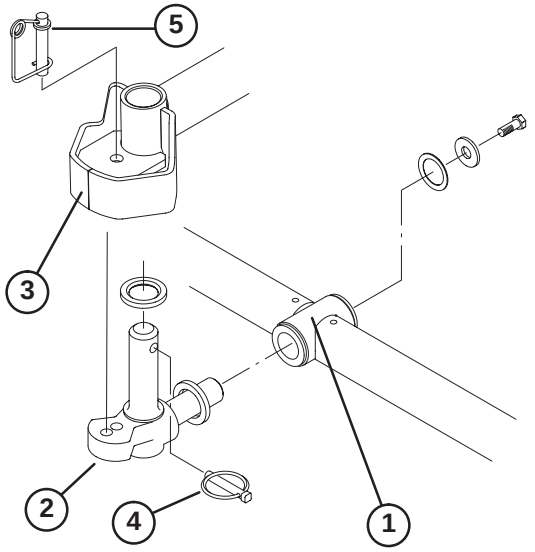

Figure 8

1. Carrier frame
2. Pivot knuckle
3. Lift arm steering plate
4. Lynch pin
5. Steering pin

7. Insert the horizontal shaft of the pivot knuckle into the mounting tube of the carrier frame (Fig. 8).

8. Secure pivot knuckle to carrier frame with a thrust washer, flat washer and a flange head capscrew (Fig. 8).

9. Insert a thrust washer onto vertical shaft of pivot knuckle (Fig. 8).

10. If removed, Insert the vertical shaft of the pivot knuckle into lift arm pivot hub (Fig. 8). Guide the pivot knuckle in place between the two rubber centering bumpers in the under side of the lift arm steering plate.

11. Insert the lynch pin into the cross hole on the pivot knuckle shaft (Fig. 8).

12. On front center cutting unit, remove nut securing turf compensation spring mounting bracket to left cutting unit stabilizer ear (Fig. 9). Insert left tipper chain onto capscrew and secure with nut removed.

13. Secure the right tipper chain to right cutting unit stabilizer ears with a capscrew (3/8 x 1 inch) and flange nut supplied in loose parts (Fig. 9).

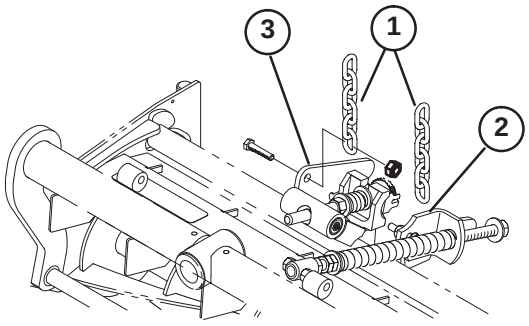

Figure 9

1. Lift chains
2. Turf compensation mounting bracket
3. Cutting unit stabilizer ear

14. Mount the motor to the drive end of the cutting unit and secure with two capscrews provided (Fig. 10).

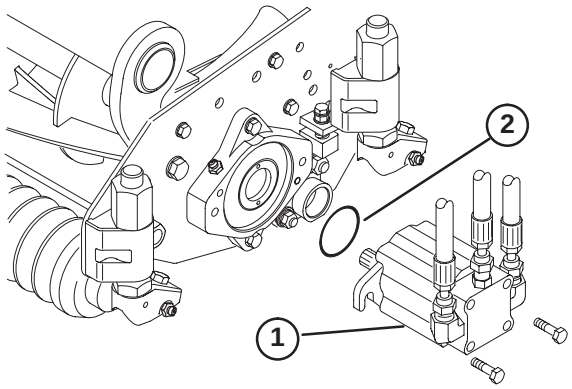

Figure 10

1. Motor
2. O–ring

Note: If fixed cutting unit position is required, insert steering pin into pivot knuckle mounting hole (Fig. 8). Hook spring wire around bottom of steering pin.

Alternate the Adjustments

Traction units are setup at the factory appropriately for most fairway mowing applications.

The following adjustments are available for fine–tuning of the machine to the application:

Adjusting the Turf Compensation Spring

The Turf Compensation Spring (Fig. 11), connecting carrier frame to cutting unit, controls the amount of fore–aft rotation available, as well as the amount of ground clearance in transport and turn around.

The Turf Compensation Spring also transfers weight from the front to rear roller. (This helps to reduce a wave pattern in the turf, also known as bobbing.)

Important Make spring adjustments with cutting unit is mounted to traction unit and lowered to shop floor. Refer to Traction Unit Operator's Manual for mounting instructions.

1. Tighten lock nut on rear of spring rod until the gap **C** between rear of spring bracket and front of washer is 1 inch (26 mm) (Fig. 11).

2. Tighten hex nuts on front end of spring rod until the compressed length **A** of spring is 8 inches (203 mm) (Fig. 11).

Note: When cutting rough or undulating turf, increase compressed length **A** of the spring to 8-1/2 inch (216 mm) and gap **C** between rear of spring bracket and front of washer to 1–1/2 inches (39 mm) (Fig. 11).

Note: As compressed spring length **A decreases**, weight transfer from front roller to rear roller **increases** and carrier frame/cutting unit rotation angle **B decreases**.

Note: As gap **C** between spring bracket and washer **increases**, cutting unit ground clearance **decreases** and carrier frame/cutting unit rotation angle **B increases**.

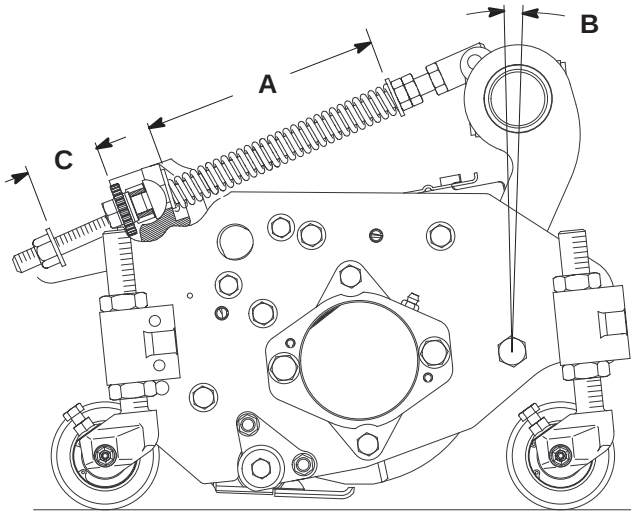

Figure 11

Lifted Height of Outer Front Cutting Units (Enable Position)

The turnaround height of the front outer cutting units (Number 4 & 5) may be increased to provide additional ground clearance on contoured fairways. Contact your distributor for assistance.

Note: The RM CONFIG time delay should not be changed from the original setting of 0 when using this method to adjust turn around height.

To increase the turn around height of the front cutting units proceed as follows:

- Position machine on a level surface, lower the cutting units and stop the engine.

- Loosen the carriage bolt nut securing the lift arm switch bracket to the #4 lift arm (left front) (Fig. 12).

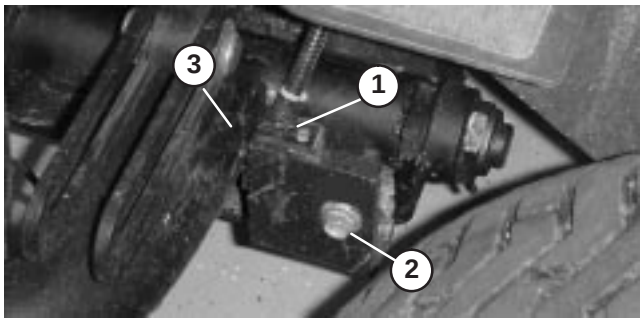

Figure 12

1. Lift arm switch
2. Carriage bolt nut
3. Lift arm flag

- Move the lift switch bracket up in the slot to the desired position.
- Set the distance between the lift arm switch and the flag on the lift arm to to approximately .062 inches.
- Tighten carriage bolt nut.

Adjusting the Cutting Unit Stabilizer

The stabilizer for the front center cutting unit can be adjusted up or down to stabilize the cutting unit when in the fully raised position.

1. Raise all cutting units to the transport position and shut off the engine.

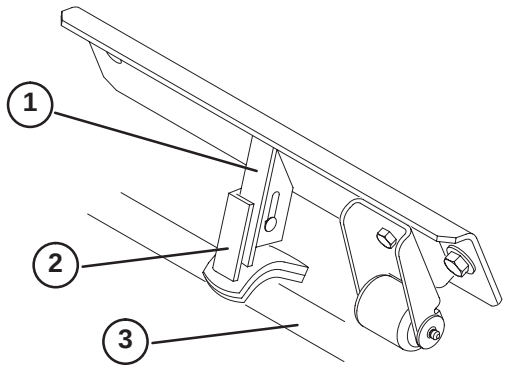

Figure 13

1. Cutting unit stabilizer
2. Stabilizer saddle
3. Carrier frame

2. On front center cutting unit, loosen the carriage bolts and nut securing the stabilizer saddle to stabilizer (Fig. 13).

3. Slide saddle down until it contacts cutting unit carrier frame. Tighten carriage bolts and nuts.

Note: Additional holes are provided to further adjust, if required.

Rear Ballast

Model 03550 (2 Wheel Drive) complies with the CEN standard EN 836:1997, ISO standard 5395:1990 and the ANSI B71.4–1999 Standard when 100 lbs. (45 kg) of calcium chloride ballast is added to rear wheels and rear weight kit (Part No. 104–1478) is installed.

Model 03551 (4 Wheel Drive) complies with the CEN standard EN 836:1997, ISO standard 5395:1990 and ANSI B71.4–1999 Standard when 100 lbs. (45 kg) of calcium chloride ballast is added to rear wheels.

Important If a puncture occurs in a tire with calcium chloride, remove unit from turf area as quickly as possible. To prevent possible damage to turf, immediately soak affected area with water.

Before Operating

Note: Determine the left and right sides of the machine from the normal operating position.

Warning

Before servicing or making adjustments to the machine, stop the engine and remove the key from the switch. Lower the cutting units to the ground.

Checking the Engine Oil

Crankcase capacity is 128 ounces (3.8 l) with filter.

1. Park machine on a level surface, stop engine and remove key from ignition switch. Open the hood.
2. Remove dipstick, wipe clean and reinstall dipstick. Remove dipstick and check oil level on dipstick; Oil level should be up to the **full** mark (Fig. 14).

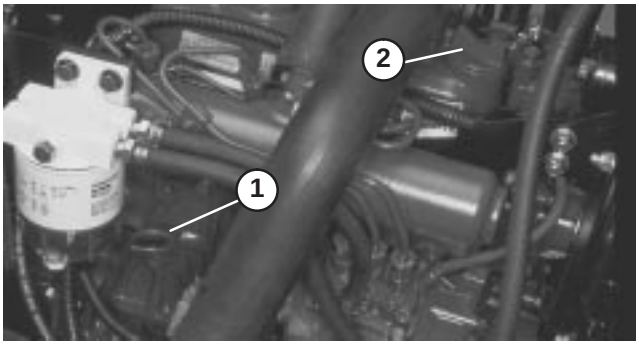

Figure 14

1. Dip stick
2. Oil fill cap

3. If oil is below **full** mark, remove fill cap and add SAE 10W–30 CD, CE, CF, CF–4 or CG–4 classification oil until level reaches **full** mark on dipstick (Fig. 14). **Do not over fill.** Crankcase capacity is 128 ounces (3.8 l) with filter.
4. Install oil fill cap and close hood.

Checking the Cooling System

Clean debris off screen, oil cooler and front of radiator daily, more often if conditions are extremely dusty and dirty. Refer to Servicing the Engine Cooling System, page 38.

The cooling system is filled with a 50/50 solution of water and permanent ethylene glycol anti–freeze. Check level of coolant in expansion tank at beginning of each day before starting the engine. Capacity of cooling system is 307 ounces.

Caution

If the engine has been running, pressurized hot coolant can escape and cause burns if the radiator cap is removed.

Allow the engine to cool at least 15 minutes or until the radiator cap is cool enough to touch without burning hands.

5. Check level of coolant in expansion tank. Coolant level should be between the marks on side of tank (Fig. 15).



Figure 15

1. Expansion tank

6. If coolant level is low, remove expansion tank cap and replenish the system. **Do not over fill.**
7. Install expansion tank cap.

Filling the Fuel Tank

Danger

Under certain conditions, diesel fuel and fuel vapors are highly flammable and explosive. A fire or explosion from fuel can burn you and others and can cause property damage.

- **Use a funnel and fill the fuel tank outdoors, in an open area, when the engine is off and is cold. Wipe up any fuel that spills.**
- **Do not fill the fuel tank completely full. Add fuel to the fuel tank until the level is 1 in. (26 mm) below the bottom of the filler neck. This empty space in the tank allows the fuel to expand.**
- **Never smoke when handling fuel, and stay away from an open flame or where fuel fumes may be ignited by a spark.**
- **Store fuel in a clean, safety-approved container and keep the cap in place.**

1. Remove fuel tank cap (Fig. 16).
2. Fill tank to about 1 inch (26 mm) below top of tank, not filler neck with No. 2 diesel fuel. Then install cap (Fig. 16).

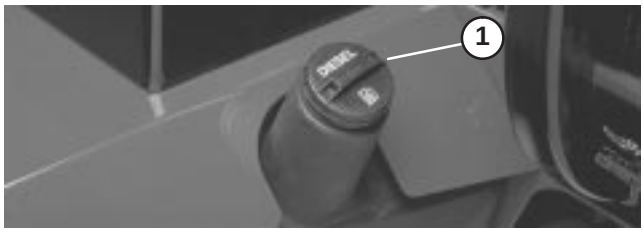

Figure 16

1. Fuel tank cap

Checking the Transmission Fluid

The front axle housing acts as the reservoir for the system. The transmission and axle housing are shipped from the factory with approximately 160 ounces of Mobil 424 hydraulic fluid. However, check level of transmission oil before engine is first started and daily thereafter.

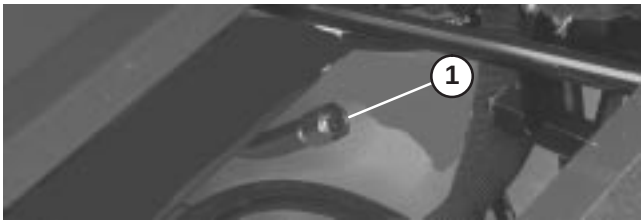

Figure 17

1. Transmission dipstick cap

3. Screw dipstick filler cap finger–tight onto filler neck (Fig. 17). It is not necessary to tighten cap with a wrench.

Checking the Hydraulic Fluid

The machines reservoir is filled at the factory with approximately 8–1/2 gallons of high quality hydraulic fluid.

Check the level of hydraulic fluid before the engine is first started and daily thereafter. Appropriate hydraulic oils are listed below.

The following list is not assumed to be all–inclusive. Hydraulic fluids produced by other manufacturers may be used if they can cross reference to find an equivalent to the products listed. Toro will not assume responsibility for damage caused by improper substitutions, so use only products from reputable manufacturers who will stand behind their recommendation.

Universal Tractor Hydraulic Fluid

Mobil	Mobil Fluid 424
Amoco	1000 Fluid
Chevron	Tractor Hydraulic Fluid
Conoco	Power–Tran 3
Exxon	Torque Fluid
Pennzoil	Hydra–Tranz
Shell	Donax TD
Texaco	TDH

Note: Many hydraulic fluids are almost colorless, making it difficult to spot leaks. A red dye additive for the hydraulic system oil is available in 2/3 oz. (20 ml) bottles. One bottle is sufficient for 4–6 gallons (15–22 1) of hydraulic oil. Order part no. 44–2500 from your authorized Toro distributor.

1. Position machine on a level surface, lower the cutting units and stop the engine.

2. Clean area around filler neck and cap of hydraulic tank. Remove cap from filler neck (Fig. 18).

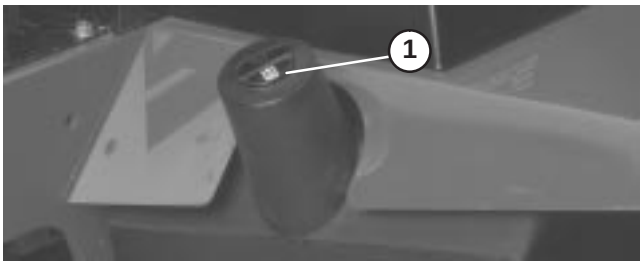

Figure 18

1. Hydraulic tank cap

3. Remove dipstick from filler neck and wipe it with a clean rag. Insert dipstick into filler neck; then remove it and check level of fluid. Fluid level should be within 1/4 inch (6 mm) of mark on dipstick.
4. If level is low, add appropriate fluid to raise level to full mark.
5. Install dipstick and cap onto filler neck.

Checking the Rear Axle Lubricant (Model 03551 Only)

The rear axle has three separate reservoirs which use SAE 80W-90 wt. gear lube. Although the axle is shipped with lubricant from the factory, check the level before operating the machine.

1. Position the machine on a level surface.
2. Remove check plugs (3) from axle and make sure lubricant is up to bottom of each hole (Figures 19 and 20).
3. If level is low, remove center fill plug and add enough lubricant to bring the level up to the bottom of the center check plug hole (Figures 19 and 20).
4. Remove each end check plug and add enough lubricant to bring the level up to the bottom of each check plug hole.
5. Install all the plugs.

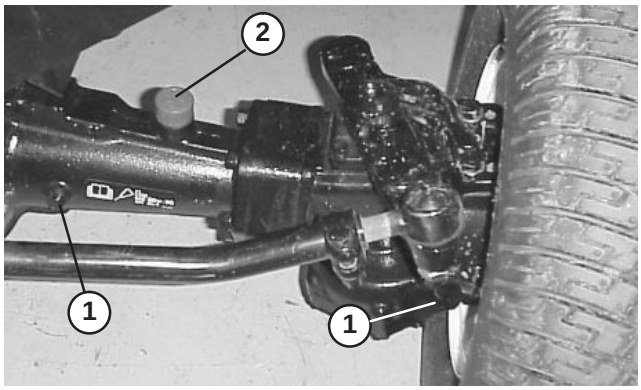

Figure 19

1. Check plug
2. Fill plug

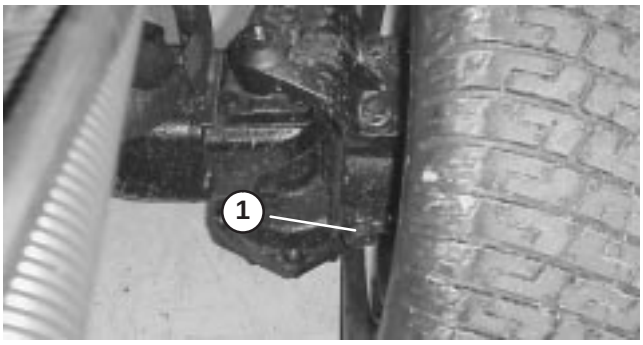

Figure 20

1. Left check plug—rear part of axle

Checking the Reel to Bedknife Contact

Each day before operating, check reel to bedknife contact, regardless if quality of cut had previously been acceptable. There must be light contact across the full length of the reel and bedknife (refer to Adjusting Reel to Bedknife in Cutting Unit Operator's Manual).

Check the Torque of the Wheel Nuts

Tighten wheel nuts to 45–55 ft-lb (61–75 N•m) after 1 to 4 hours of operation and again after 10 hours of operation and every 250 hours thereafter.

Warning

Failure to maintain proper torque of the wheel nuts could result in personal injury.

Torque the front wheel nuts and rear wheel bolts to 45–55 ft-lb after 1–4 hours of operation and again after 10 hours of operation. Torque every 250 hours thereafter.

Operation

Note: Determine the left and right sides of the machine from the normal operating position.

Controls

Adjusting the Seat

Seat adjusting lever allows 4 inches (102 mm) fore and aft adjustment. To adjust seat fore and aft, pull lever on left side of seat assembly outward (Fig. 21). After moving seat to desired location, release lever to lock seat into position.

Seat adjusting knob adjusts seat for operators weight. To adjust for operators weight, turn spring tension knob; clockwise to increase tension, counterclockwise to decrease spring tension (Fig. 21).

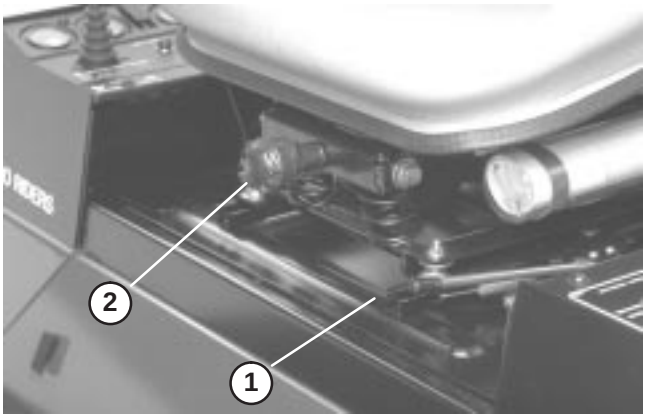

Figure 21

1. Seat adjusting lever
2. Seat adjusting knob

Traction Pedal

Controls forward and reverse operation. Depress top of pedal to move forward and bottom to move backward (Fig. 22). Ground speed depends on how far pedal is depressed. For no load, maximum ground speed, fully depress pedal while throttle is in the **fast** position. To stop, reduce foot pressure on traction pedal and allow it to return to center position.



Figure 22

1. Traction pedal

Brake Pedals

Two foot pedals operate individual wheel brakes for turning assistance, parking and to aid in obtaining better sidehill traction. Locking pin connects the pedals for parking brake operation and transport (Fig. 23).

Parking Brake Latch

A knob on the left side of console actuates parking brake lock. To engage parking brake, connect pedals with locking pin, push down on both pedals and pull parking brake latch out. To release parking brake, depress both pedals until parking brake latch retracts (Fig. 23).

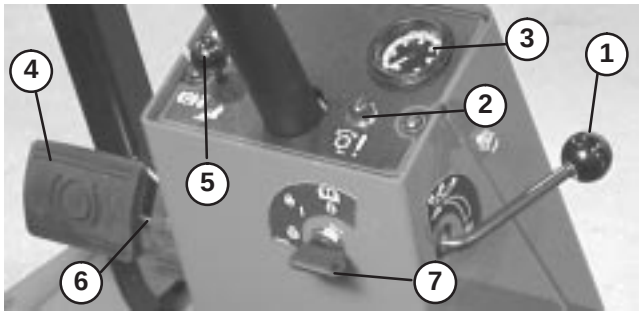

Figure 23

1. Forward speed limiter
2. Reel control light
3. Speedometer
4. Brake pedals
5. Parking brake latch
6. Locking pin
7. Key switch

Traction Speed Limiter

Preset this lever to limit the amount the traction pedal can be depressed in the forward direction to maintain a constant mowing speed (Fig. 23).

Reel Control Light

When lit, indicates a control system problem. Light blinks when glow plugs are preheating (Fig. 23).

Key Switch

Three positions: **Off**, **On/Preheat** and **Start** (Fig. 23).

Speedometer

Indicates ground speed at which machine is traveling (Fig. 23).

Lower Mow/Raise Control Lever

The lever raises and lowers the cutting units and also starts and stops the reels (Fig. 24).

Fuel Gauge

Shows amount of fuel in tank (Fig. 24).

Engine Oil Pressure Warning Light

Indicates dangerously low engine oil pressure (Fig. 24).

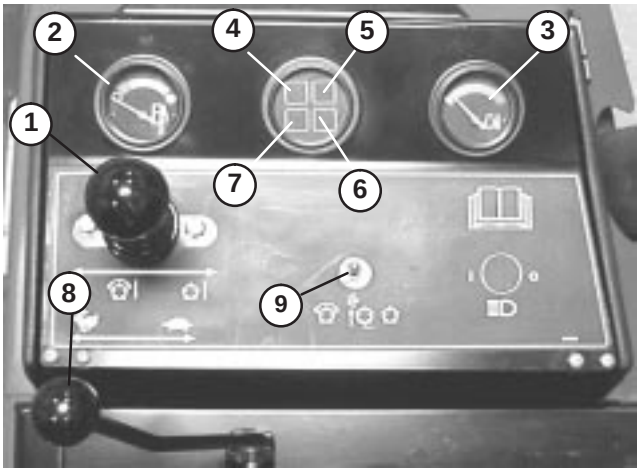

Figure 24

1. Lower mow/Raise control lever
2. Fuel gauge
3. Engine coolant temperature gauge
4. Engine oil pressure warning light
5. Engine coolant temperature warning light
6. Glow plug indicator light
7. Charge indicator
8. Throttle control
9. Enable/Disable switch

Engine Coolant Temperature Warning Light

The light illuminates and engine shuts down when coolant reaches a dangerously high temperature (Fig. 24).

Glow Plug Indicator Light

When lit, indicates glow plugs are on (Fig. 24).

Charge Indicator

Illuminates when system charging circuit malfunctions (Fig. 24).

Throttle Control

Move control forward to increase engine speed, rearward to decrease speed (Fig. 24).

Enable/Disable Switch

Used in conjunction with lower mow / raise control lever (Joystick) to operate reels. Reels can be raised but not lowered when in mid position (Fig. 24).

Backlap Knobs

Used in conjunction with lower mow / raise control lever for backlapping operation (Fig. 24). Refer to Backlapping on page 49.

Reel Speed Controls

Controls RPM of front and rear cutting units (Fig. 25). #1 position is for backlapping. Remaining settings are for mowing operations. See section in manual for operating instructions and decal under seat for proper settings.

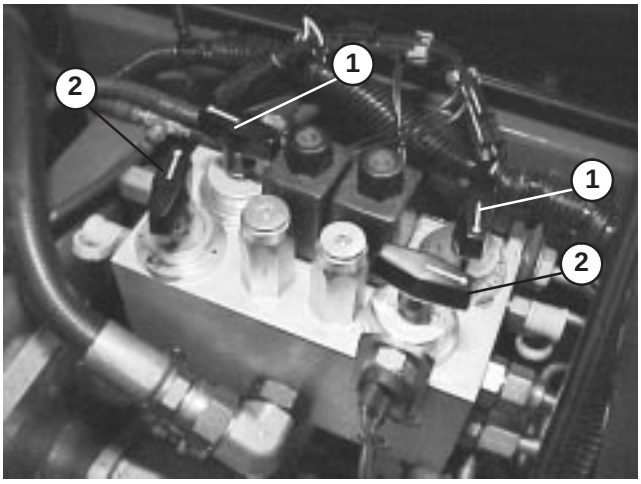

Figure 25

1. Reel speed controls
2. Backlap knobs

Hour Meter

(Located under control panel) shows total hours that machine has been operated.

Warning

Before servicing or making adjustments to the machine, stop the engine and remove the key from the switch. Lower the cutting units to the ground.

Starting and Stopping

Important The fuel system must be bled if any of the following situations have occurred. Refer to Bleeding the Fuel Sysetm, page 25.

A. Initial start up of a new machine.

B. Engine has ceased running due to lack of fuel.

C. Maintenance has been performed upon fuel system components; i.e., filter replaced, separator serviced, etc.

1. Sit on the seat, keep foot off traction pedal. Assure parking brake is engaged, traction pedal is in **Neutral**, throttle is in **Fast** position and the **Enable/Disable** switch is in the **Disable** position.
2. Turn ignition switch to **On/Preheat** position. An automatic timer will control preheat for 6 seconds. After preheat, turn key to **start** position. **Do not crank the engine or longer than 15 seconds.** Release key when engine starts. If additional preheat is required, turn key to **off** position then to **On/preheat** position. Repeat process as required.
3. Run engine at idle speed or partial throttle until engine warms up.

Note: Move throttle to **fast** position when restarting a warm engine.

4. To stop, move all controls to **neutral** and set parking brake. Return throttle to the idle position, turn key to **off** and remove it from the switch.

Bleeding the Fuel System

1. Raise hood over engine.
2. Open the air bleed screw on the fuel injection pump (Fig. 26) with a 12 mm wrench.

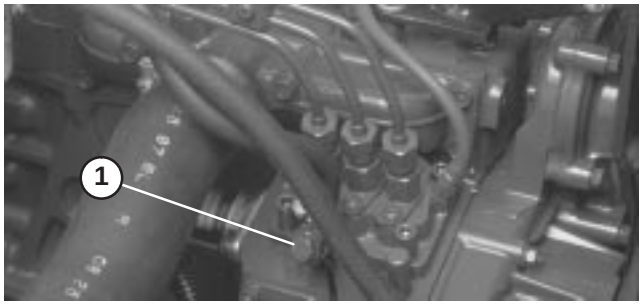

Figure 26

1. Fuel injection pump bleed screw

3. Turn key in ignition switch to the **on** position. Electric fuel pump will begin operation, thereby forcing air out around air bleed screw. Leave key in the **on** position until solid stream of fuel flows out around screw. Tighten screw and turn key to **off**.

Danger

Under certain conditions, diesel fuel and fuel vapors are highly flammable and explosive. A fire or explosion from fuel can burn you and others and can cause property damage.

- **Use a funnel and fill the fuel tank outdoors, in an open area, when the engine is off and is cold. Wipe up any fuel that spills.**
- **Do not fill the fuel tank completely full. Add fuel to the fuel tank until the level is 1 inch (26 mm) below the bottom of the filler neck. This empty space in the tank allows the fuel to expand.**
- **Never smoke when handling fuel, and stay away from an open flame or where fuel fumes may be ignited by a spark.**
- **Store fuel in a clean, safety-approved container and keep the cap in place.**

Note: Normally, engine should start after above bleeding procedures are followed. However, if engine does not start, air may be trapped between injection pump and injectors; refer to Bleeding Air From Injectors, page 38.

Setting the Reel Speed

To achieve a consistent, high quality–of–cut and a uniform after cut appearance, it is important that the reel speed controls (located under seat) be correctly set.

Adjust the reel speed controls as follows:

1. Select the height-of-cut at which the cutting units are set.
2. Choose the desired ground speed best suited for conditions.

3. Using the appropriate graph (See figure 27) for 5, 7 or 11 blade cutting units, determine the proper reel speed setting.

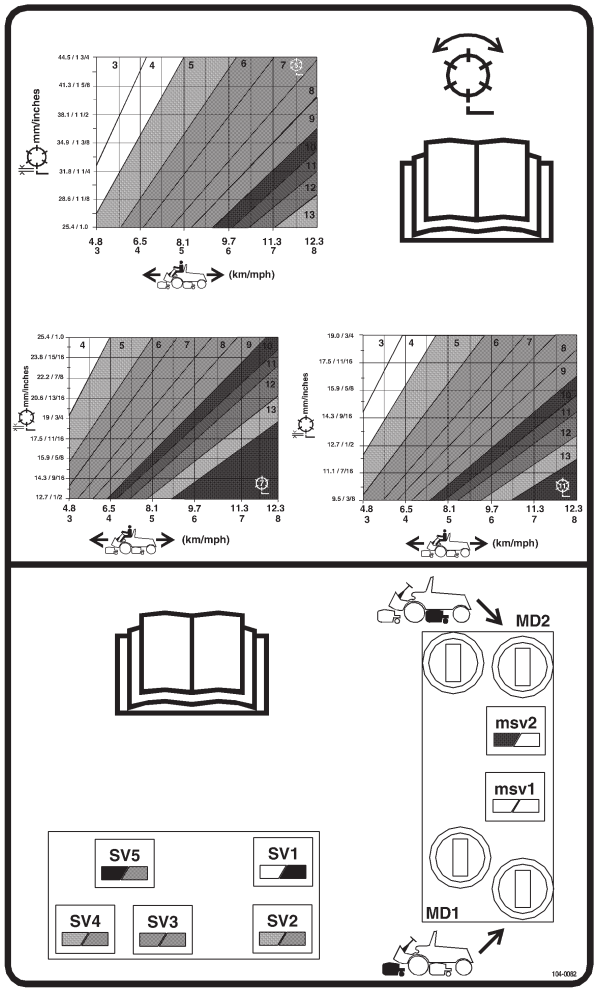

Figure 27

4. To set reel speed, rotate knobs (Fig. 28) until indicator arrows are in line with the number designating desired setting.

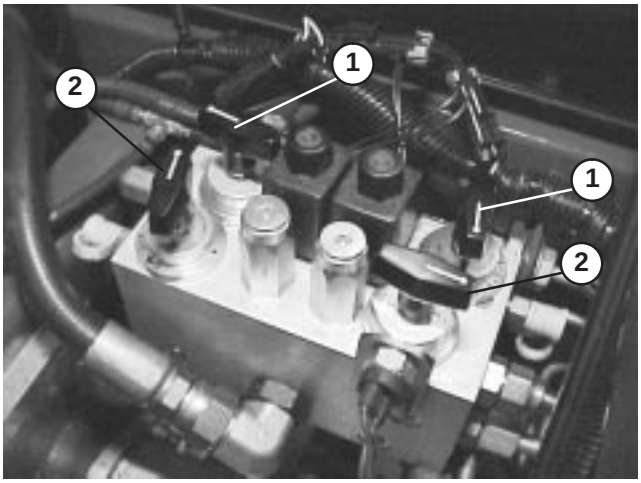

Figure 28

1. Backlap knobs
2. Reel speed control

5. Operate the machine for several days, then examine the cut to ensure satisfaction with the quality of cut. The reel speed selector knobs may be set one position on either side of the position indicated on the chart to account for differences in grass condition, grass length removed, and personal preference of the superintendent. For a cut with more grass removed but slightly more clip visibility, move the reel speed selector knobs one position lower than specified. For a cut with less grass removed and slightly less clip visibility, move the reel speed selector knobs one position higher than specified.

Note: Reel speed can be increased or decreased to compensate for turf conditions.

Adjusting the Rear Lift Arm Counterbalance

The counterbalance spring on the rear cutting unit lift arms can be adjusted to compensate for different turf conditions. Decreased counterbalance will help keep the cutting units on the ground when mowing at higher speeds and helps maintain a uniform height-of-cut in rough conditions or in areas of thatch build up. Each counterbalance spring may be adjusted to one of three settings. Each increment increases or decreases down pressure on the cutting units by 2 lbs.

1. Position machine on a level surface, lower the cutting units, stop the engine, engage the parking brakes and remove key from ignition switch.

Warning

Springs are under tension, use caution when adjusting.

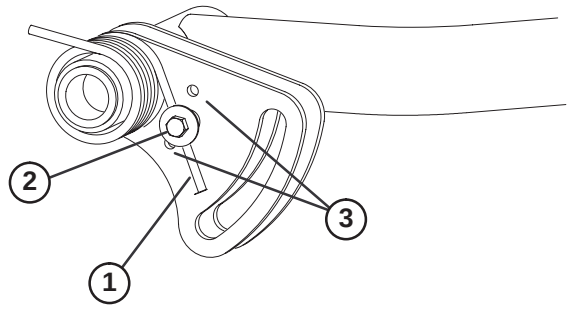

Figure 29

1. Counterbalance spring
2. Spring bolt
3. Adjustment locations

2. Remove the capscrew and locknut while relieving spring tension (Fig. 29).

3. Move spring bolt to desired location and install capscrew and locknut, while relieving spring tension (Fig. 29).

Towing the Traction Unit

If it becomes necessary to tow the machine, tow it forward only, for a short distance and at a speed no greater than 3 mph.

Note: If these towing limits are exceeded, severe damage to the hydrostatic transmission will occur.

1. Loosen and remove capscrews securing the drive shaft to the engine drive coupler. Loosen capscrews clamping drive shaft to transmission (Fig. 30). Remove drive shaft.

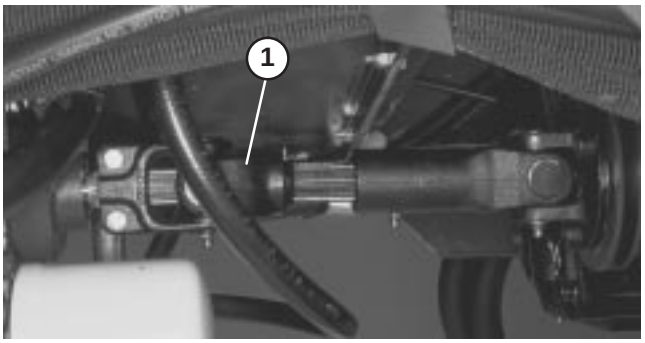

Figure 30

1. Drive shaft

Important If drive shaft is not removed before towing, the transmission input shaft will not be able to rotate, thus not allowing the transmission to maintain its internal lubrication. Severe damage to the hydrostatic transmission will occur.

2. Attach a suitable chain, strap or cable to the center of the front frame member (Fig. 31).

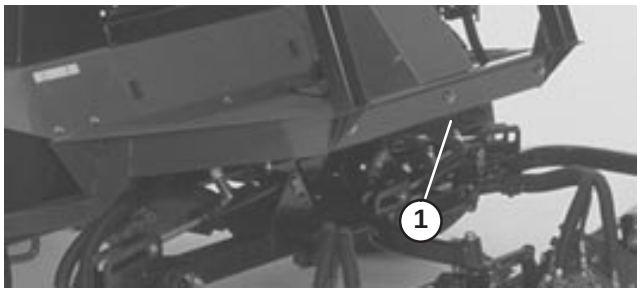

Figure 31

1. Center of front frame member

Note: Lock both brake pedals together before towing.

3. Attach the other end of the towing device to a vehicle that is capable of towing the machine safely and at speeds below 3 mph.

4. An operator must be on the machine to steer it and keep the traction pedal fully depressed in the forward position while towing.

5. When towing is completed, reinstall driveshaft as shown in Figure 30. The splines are designed to allow assembly only when the two halves of the shaft are properly oriented.

Diagnostic Light

The RM 5500–D is equipped with a diagnostic light which indicates if the electronic controller is functioning correctly. The green diagnostic light is located under the control panel, next to the fuse block. When the electronic controller is functioning correctly and the key switch is moved to the **on** position, the controller diagnostic light will be illuminated. The light will blink if the controller detects a malfunction in the electrical system. The light will stop blinking and automatically reset when the key switch is turned to the **off** position.

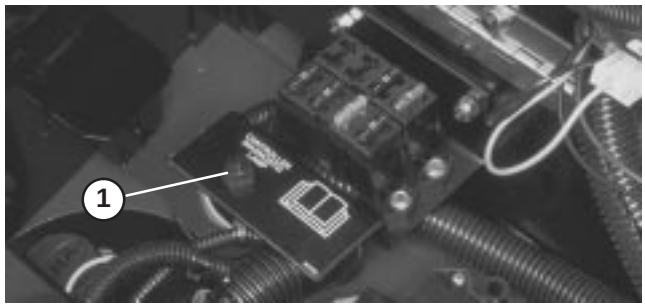

Figure 32

1. Electronic controller light

When the controller diagnostic light blinks, one of the following problems has been detected by the controller:

A. One of the outputs has been shorted.

B. One of the outputs is open circuited.

Using the diagnostic display, determine which output is malfunctioning; refer to Checking Interlock Switches, page 28.

If the diagnostic light is not illuminated when the key switch is in the **on** position, this indicates that the electronic controller is not operating. Possible causes are:

- Loopback is not connected.
- The light is burned out.
- Fuses are blown.
- No battery power.

Check electrical connections, input fuses and diagnostic light bulb to determine malfunction. Make sure loopback connector is secured to wire harness connector.

Diagnostic ACE Display

The RM 5500–D is equipped with an electronic controller which controls most machine functions. The controller determines what function is required for various input switches (i.e. seat switch, key switch, etc.) and turns on the outputs to actuate solenoids or relays for the requested machine function. For the electronic controller to control the machine as desired, each of the input switches, output solenoids and relays must be connected and functioning properly. The Diagnostic ACE display is a tool to help the user verify correct electrical functions of the machine.

Checking the Interlock Switches

The purpose of the interlock switches are to prevent the engine from cranking or starting unless the traction pedal is in **neutral**, the Enable/Disable switch is in **disable** and the Lower Mow/Raise control is in the **neutral** position. In addition, the engine will stop when the traction pedal is depressed with operator off the seat or when parking brake is engaged.

Caution

If safety interlock switches are disconnected or damaged the machine could operate unexpectedly causing personal injury.

- **Do not tamper with the interlock switches.**
- **Check the operation of the interlock switches daily and replace any damaged switches before operating the machine.**
- **Replace switches every two years regardless of whether they are operating properly or not.**

Verifying the Interlock Switch Function

1. Park machine on a level surface, lower the cutting units, stop the engine and engage the parking brake.
2. Open control panel cover. Locate wire harness and connectors near controller. Carefully unplug loop back connector from harness connector.

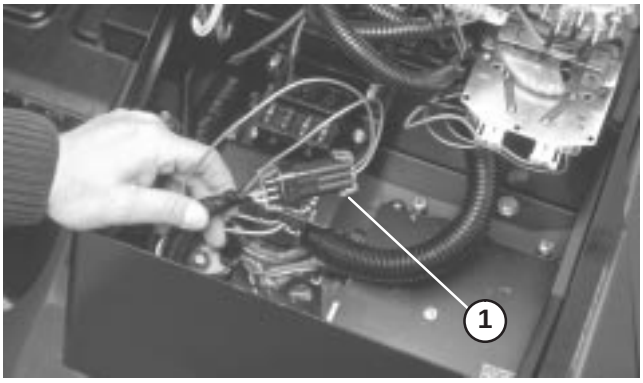

Figure 33

1. Wire harness and connectors

3. Connect the Diagnostic ACE display connector to the harness connector. Make sure correct overlay decal is positioned on Diagnostic ACE display.
4. Turn the key switch to the **on** position, but do not start machine.

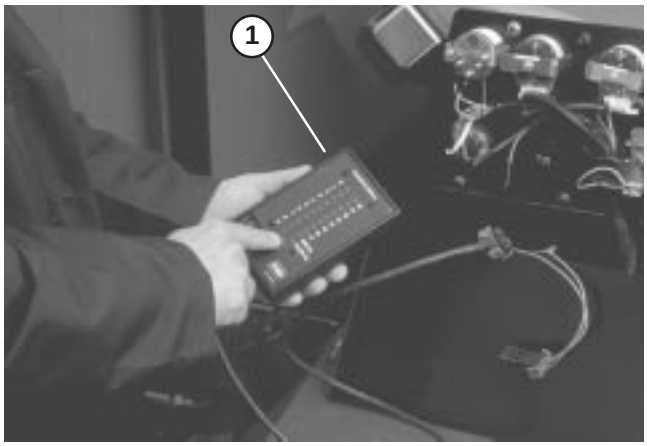

Figure 34

1. Diagnostic Ace

Note: The red text on the overlay decal refers to input switches and the green text refers to outputs.

5. The **inputs displayed** LED, on lower right column of the Diagnostic ACE, should be illuminated. If the **outputs displayed** LED is illuminated, press the toggle button, on Diagnostic ACE, to change the LED to **inputs displayed**.

6. The Diagnostic ACE will illuminate the LED associated with each of the inputs when that input switch is closed. Individually, change each of the switches from open to closed (i.e., sit on seat, engage traction pedal, etc.), and note that the appropriate LED on Diagnostic ACE will blink on and off when corresponding switch is closed. Repeat on each switch that is it possible to be changed by hand.

7. If switch is closed and appropriate LED does not turn on, check all wiring and connections to switch and/or check switches with an ohm meter. Replace any defective switches and repair any defective wiring.

The Diagnostic ACE also has the ability to detect which output solenoids or relays are turned on. This is a quick way to determine if a machine malfunction is electrical or hydraulic.

Verifying Output Function

1. Park machine on a level surface, lower the cutting units, stop the engine and engage the parking brake.

2. Open control panel cover. Locate wire harness and connectors near controller. Carefully unplug loopback connector from harness connector.

3. Connect the Diagnostic ACE connector to the harness connector. Make sure correct overlay decal is positioned on Diagnostic ACE.

4. Turn the key switch to the **on** position, but do not start machine.

Note: The red text on the overlay decal refers to input switches and the green text refers to outputs.

5. The **outputs displayed** LED, on lower right column of Diagnostic ACE, should be illuminated. If **inputs displayed** LED is illuminated, press the toggle button, on Diagnostic ACE, to change LED to **outputs displayed**.

Note: It may be necessary to toggle between **inputs displayed** and **outputs displayed** several times to do the following step. To toggle back and forth, press toggle button once. This may be done as often as required. **Do not hold the button.**

6. Sit on the seat and attempt to operate the desired function of the machine. (If you need help verifying the correct input settings for each function, refer to the Logic Chart on page 27) The appropriate output LED's should illuminate to indicate that the ECU is turning on that function.

Note: If any output LED is blinking, this indicates an electrical problem with that output. Repair or replace defective electrical parts immediately. To reset a blinking LED, turn the key switch **off**, then back **on**.

If no output LED's are blinking, but the correct output LED's do not illuminate, verify that the required input switches are in the necessary positions to allow that function to occur. Verify correct switch function.

If the output LED's are on as specified, but the machine does not function properly, this indicates a non–electrical problem. Repair as necessary.

Note: Due to electrical system constraints, the output LED's for **start**, **preheat** and **etr/alt** may not blink even though an electrical problem may exist for those functions. If the machine problem appears to be with one of these functions, be certain to check the electrical circuit with a volt/ohm meter to verify that no electrical problem exists to these functions.

If each output switch is in the correct position and functioning correctly, but the output LED's are not correctly illuminated, this indicates an ECU problem. If this occurs, contact your Toro Distributor for assistance.

Important The Diagnostic ACE display must not be left connected to the machine except for trouble shooting. It is not designed to withstand the environment of the machine's every day use. When done using Diagnostic ACE, disconnect it from the machine and reconnect loopback connector to harness connector. Machine will not operate without loopback connector installed on harness. Store the Diagnostic ACE in dry, secure location in shop, not on machine.

Hydraulic Valve Solenoid Functions

Use the list below to identify and describe the different functions of the solenoids in the hydraulic manifold. Each solenoid must be energized to allow function to occur.

Solenoid	Function
MSV1	Front reel circuit
MSV2	Rear reel circuit
SV4	Lift front wing cutting units
SV3	Lift front center cutting unit
SV5	Lift rear cutting units
SV1	Lower any cutting units
SV1,SV2	Lift any cutting units

Operating Characteristics

Becoming Familiar with the Machine

Before mowing grass, practice operating machine in an open area. Start and stop the engine. Operate in forward and reverse. Lower and raise cutting units and engage and disengage reels. When you feel familiar with the machine, practice operating up and down slopes at different speeds.

The brakes can be used to assist in turning the machine. However, use them carefully, especially on soft or wet grass conditions because the turf may be torn accidentally. Individual turning brakes may also be used to help maintain traction. For example, in some slope conditions, the uphill wheel slips and loses traction. If this situation occurs, depress uphill turn pedal gradually and intermittently until the uphill wheel stops slipping, thus, increasing traction on the downhill wheel.

Important When operating machine, always use the seat belt and ROPS together.

Warning System

If a warning light comes on during operation, stop the machine immediately and correct the problem before continuing operation. Serious damage could occur if the machine is operated with a malfunction.

Running the Mower

Start engine and move throttle to **fast** so engine is running at maximum speed. Move the **enable/disable** switch to **enable** and use the **lower mow/raise** lever to control the cutting units (front cutting units are timed to lower before the rear cutting units). To move forward and cut grass, press traction pedal forward.

Transporting the mower

Move the **enable/disable** switch to joy stick **disable** and raise the cutting units to the transport position. Be careful when driving between objects so you do not accidentally damage the machine or cutting units. Use extra care when operating machine on slopes. Drive slowly and avoid sharp turns on slopes to prevent roll overs. The cutting units should be lowered when going downhill for steering control.

Maintenance

Note: Determine the left and right sides of the machine from the normal operating position.

Recommended Maintenance Schedule

Maintenance Service Interval	Maintenance Procedure
After first 10 hours	• Check the fan and alternator belt tension. • Torque the wheel lug nuts. • Change the transmission fluid. • Replace the transmission filter.
After first 50 hours	• Change the engine oil and filter. • Check the engine RPM (idle and full throttle). • Torque the head and adjust valves.
After first 200 hours	• Change the planetary gear oil
Every 50 hours	• Change the engine oil. • Lubricate all grease fittings. • Check the air cleaner.[1] • Check the battery fluid level and cable connections.
Every 100 hours	• Change the engine oil filter. • Inspect the cooling system hoses. • Check the fan and alternator belt tension.
Every 200 hours	• Drain moisture from hydraulic tank. • Drain moisture from fuel tank. • Torque the wheel lug nuts. • Check the reel bearing preload.
Every 400 hours	• Service the air cleaner.[1] • Replace the fuel/water separator filter. • Replace the fuel filter. • Inspect traction linkage movement • Check the engine RPM (idle and full throttle). • Torque the head and adjust valves.
Every 800 hours	• Change the hydraulic fluid • Check rear wheel toe-in. • Pack the 2 WD rear wheel bearings. • Change the 4 WD rear axle lubricant. • Change the transmission fluid.
Every 1600 hours or every 2 years, whichever occurs first	• Replace all moving hoses. • Replace interlock safety switches. • Flush/replace the cooling system fluid. • Drain/flush fuel tank. • Drain/flush hydraulic tank.

[1]Service air cleaner whenever indicator shows red

Important Refer to your engine operator's manual for additional maintenance procedures.

Lubricating the Mower

Warning

Before servicing or making adjustments to the machine, stop the engine and remove the key from the switch. Lower the cutting units to the ground.

Greasing the Bearing and Bushings

The machine has grease fittings that must be lubricated regularly with No. 2 General Purpose Lithium Base Grease. If machine is operated under normal conditions, lubricate all bearings and bushings after every 50 hours of operation. Lubricate bearings and bushings immediately **after every** washing, regardless of the interval listed.

The grease fitting locations and quantities are:

- Engine Drive shaft (3), (Fig. 35)
- Cutting unit carrier frame and pivot (2 ea.), (Fig. 36)
- Rear lift arm pivots (2), Drive shaft clutch (1) (Fig. 37)
- Rear axle tie rod (2), Steering cylinder ball joints (2), Axle steering pivots (2) Rear axle pivot (1) (Fig. 38)
- Traction control linkage at transmission (1), Drive shaft support bearing (1), Rear axle drive shaft (3) (Fig. 39)
- Brake pedal (1) (Fig. 40)
- Lift cylinders (5) (Fig. 41)
- Front lift arm pivots (3) (Fig. 42)
- Fan drive pulley (Fig. 43)

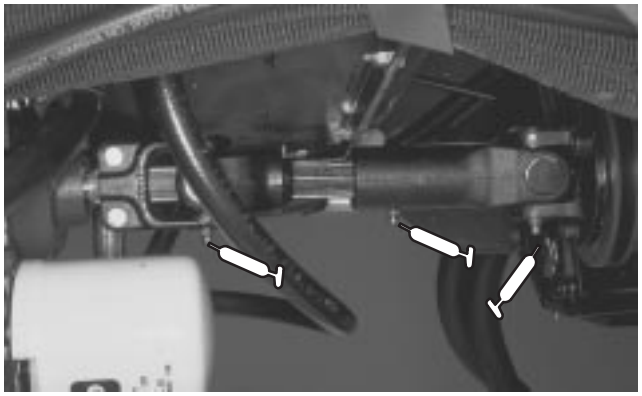

Figure 35

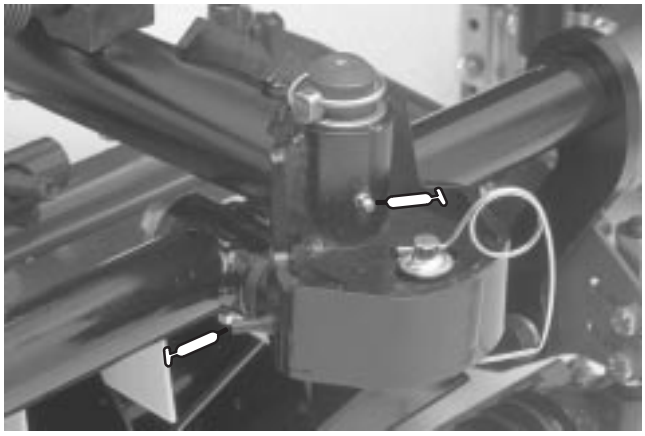

Figure 36

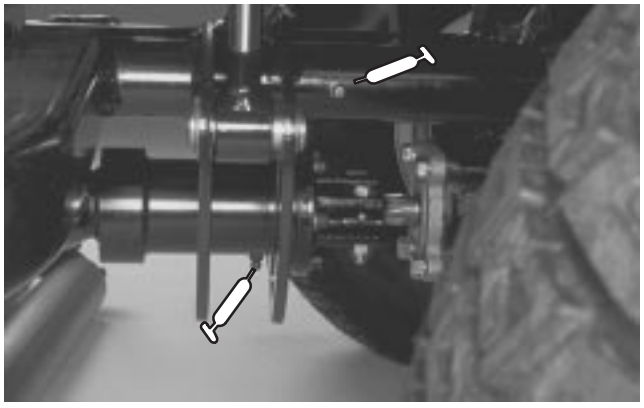

Figure 37

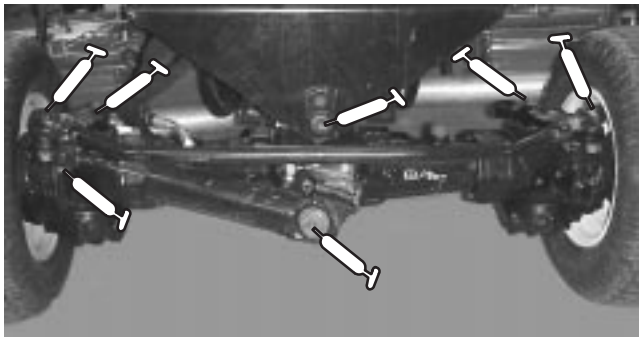

Figure 38

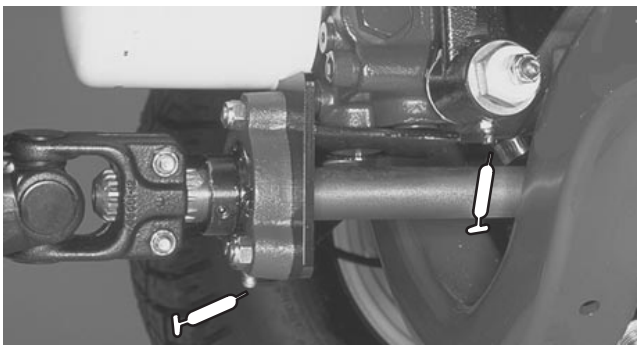

Figure 39



Figure 40

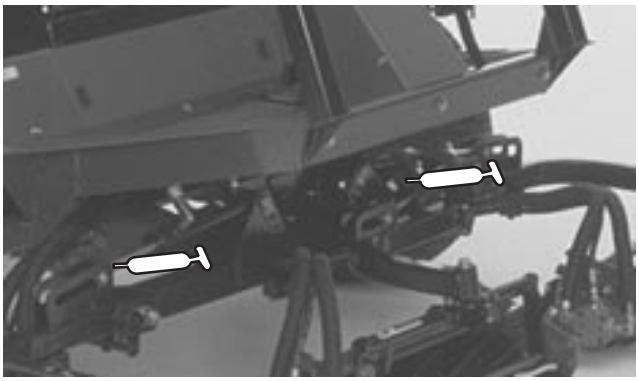

Figure 41

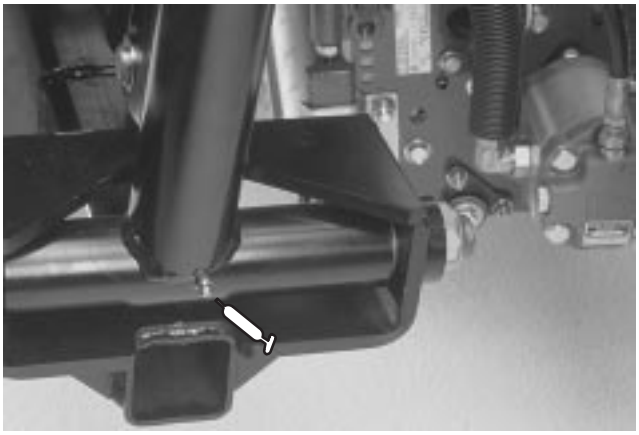

Figure 42

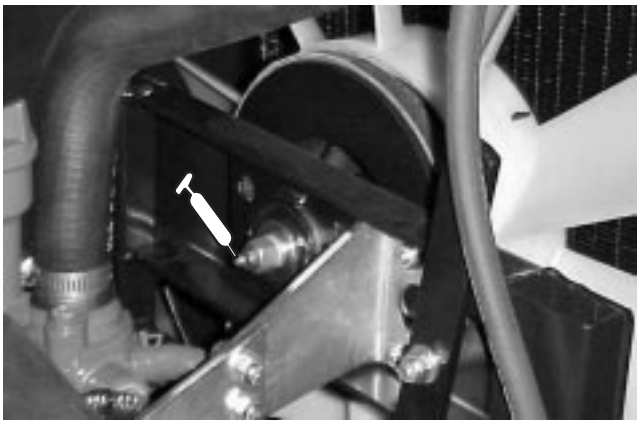

Figure 43

Service Interval Chart

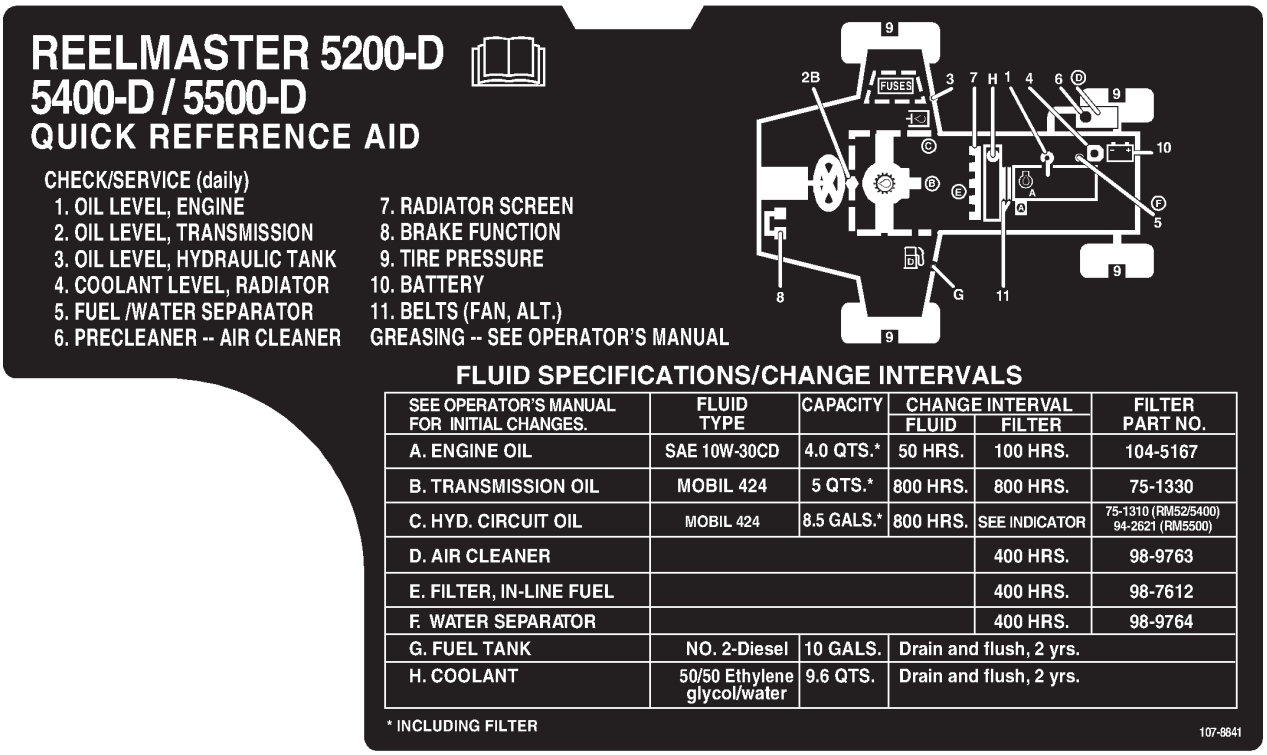

SEE OPERATOR'S MANUAL FOR INITIAL CHANGES.	FLUID TYPE	CAPACITY	CHANGE INTERVAL		FILTER PART NO.
			FLUID	FILTER	
A. ENGINE OIL	SAE 10W-30CD	4.0 QTS.*	50 HRS.	100 HRS.	104-5167
B. TRANSMISSION OIL	MOBIL 424	5 QTS.*	800 HRS.	800 HRS.	75-1330
C. HYD. CIRCUIT OIL	MOBIL 424	8.5 GALS.*	800 HRS.	SEE INDICATOR	75-1310 (RM52/5400) 94-2621 (RM5500)
D. AIR CLEANER				400 HRS.	98-9763
E. FILTER, IN-LINE FUEL				400 HRS.	98-7612
F. WATER SEPARATOR				400 HRS.	98-9764
G. FUEL TANK	NO. 2-Diesel	10 GALS.	Drain and flush, 2 yrs.		
H. COOLANT	50/50 Ethylene glycol/water	9.6 QTS.	Drain and flush, 2 yrs.		

Figure 44

Daily Maintenance Checklist

Duplicate this page for routine use.

Maintenance Check Item	For the week of:						
	Mon.	Tues.	Wed.	Thurs.	Fri.	Sat.	Sun.
Safety Interlock Operation							
Brake Operation							
Engine Oil & Fuel Level							
Cooling System Fluid Level							
Drain Water/Fuel Separator							
Air Filter Restriction Indicator							
Radiator and Screen for Debris							
Unusual Engine Noises[1]							
Unusual Operating Noises							
Transmission Oil Level							
Hydraulic System Oil Level							
Hydraulic Filter Indicator[2]							
Hydraulic Hoses for Damage							
Fluid Leaks							
Tire Pressure							
Instrument Operations							
Reel–to–Bedknife Adjustment							
Height–of–Cut Adjustment							
Lubricate All Grease Fittings[3]							
Touch–up Damaged Paint							

[1] Check glow plugs and injector nozzles, if excess smoke or rough running is noted.

[2] Check with engine running and oil at operating temperature.

[3] Immediately after every washing, regardless of the interval listed.

Servicing the Air Cleaner

Warning

Before servicing or making adjustments to the machine, stop the engine and remove the key from the switch. Lower the cutting units to the ground.

1. Check air cleaner body for damage which could possibly cause an air leak. Replace a damaged air cleaner body.
2. Service the air cleaner filters when ever air cleaner indicator (Fig. 45) shows red or every 400 hours (more frequently in extreme dusty or dirty conditions). Do not over service air filter.
3. Be sure cover is sealing around air cleaner body.

Servicing the Precleaner Bowl

Normally, inspect precleaner bowl daily. When conditions are extremely dusty and dirty, inspect more frequently. Do not let dust or debris build up above level marks on precleaner bowl.

1. Remove thumb screw, separate cover from precleaner bowl.

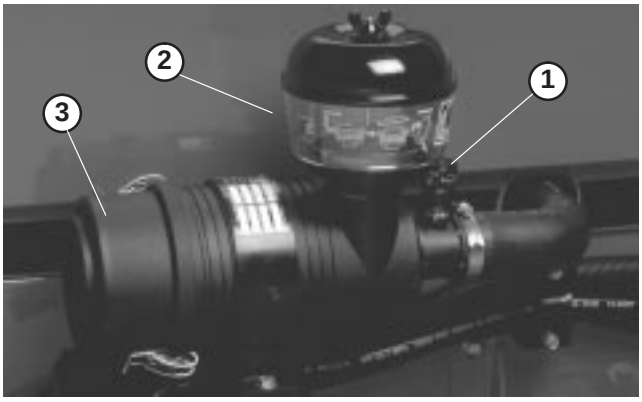

Figure 45

1. Air cleaner indicator
2. Pre cleaner bowl
3. Dust cup

2. Empty precleaner bowl and wipe clean.

3. Assemble and install precleaner bowl, cover and thumb screw.

Note: When operating machine in extremely dusty conditions, an optional extension tube (Toro Part No. 43-3810), which raises precleaner bowl above hood, thus, lengthening the time between precleaner bowl servicing, is available from your local authorized Toro Distributor.

Cleaning the Air Filter

1. Release latches securing air cleaner cover to air cleaner body. Separate cover from body. Clean inside of air cleaner cover.

2. Gently slide filter element out of air cleaner body to reduce the amount of dust dislodged. Avoid knocking filter against air cleaner body.

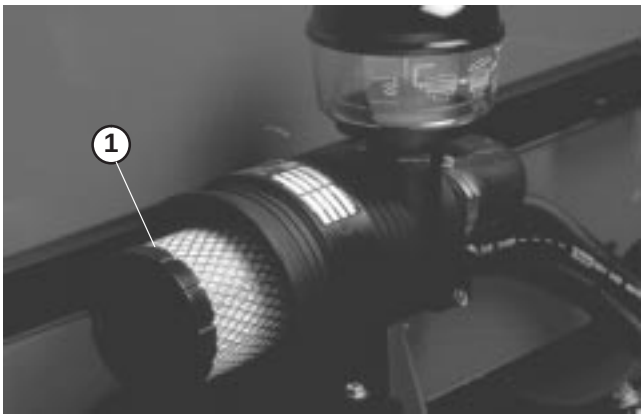

Figure 46

1. Filter element

3. Inspect filter element and discard if damaged. Do not wash or reuse a damaged filter.

4. Blow compressed air from inside to the outside of dry filter element. Do not exceed 40 psi to prevent damage to the element.

5. Keep air hose nozzle at least 2 inches (52 mm) from filter and move nozzle up and down while rotating the filter element. Inspect for holes and tears by looking through the filter toward a bright light.

6. Inspect new filter for shipping damage. Check sealing end of filter. Do not install a damaged filter.

7. Insert new filter properly into air cleaner body. Make sure filter is sealed properly by applying pressure to outer rim of filter when installing. Do not press on flexible center of filter.

8. Reinstall cover and secure latches.

9. Reset indicator (Fig. 45) if showing red.

Warning

Before servicing or making adjustments to the machine, stop the engine and remove the key from the switch. Lower the cutting units to the ground.

Servicing the Engine Oil and Filter

Change oil and filter initially after the first 50 hours of operation, thereafter change oil every 50 hours and filter every 100 hours.

1. Remove drain plug and let oil flow into drain pan (Fig. 47). When oil stops, install drain plug.

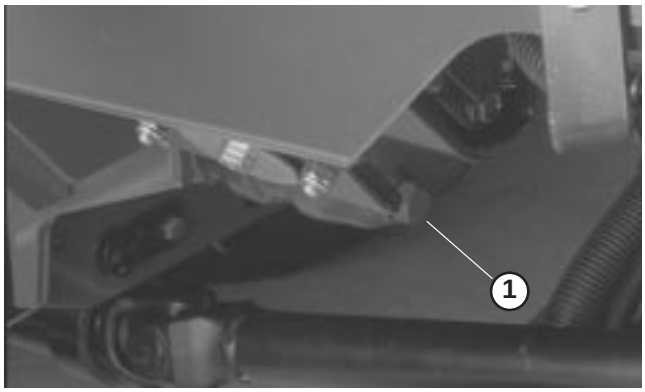

Figure 47

1. Engine oil drain plug

2. Remove the engine oil filter (Fig. 48). Apply a light coat of clean oil to the new filter seal before screwing it on. **Do not over–tighten**.



Figure 48

1. Engine oil filter

3. Add oil to crankcase; refer to Checking the Engine Oil, page 20.

Servicing the Fuel System

Changing the Fuel Tank

Drain and clean fuel tank every 2 years. Also, drain and clean tank if fuel system becomes contaminated or if machine is to be stored for an extended period. Use clean fuel to flush out the tank.

Checking the Fuel Lines and Connections

Check lines and connections every 400 hours or yearly, whichever comes first. Inspect for deterioration, damage, or loose connections.

Servicing the Fuel Filter / Water Separator

Drain water or other contaminants from fuel filter / water separator (Fig. 49) daily.

1. Locate fuel filter, under hood, and place a clean container under it.

2. Loosen drain plug on bottom of filter canister. Tighten plug after draining.

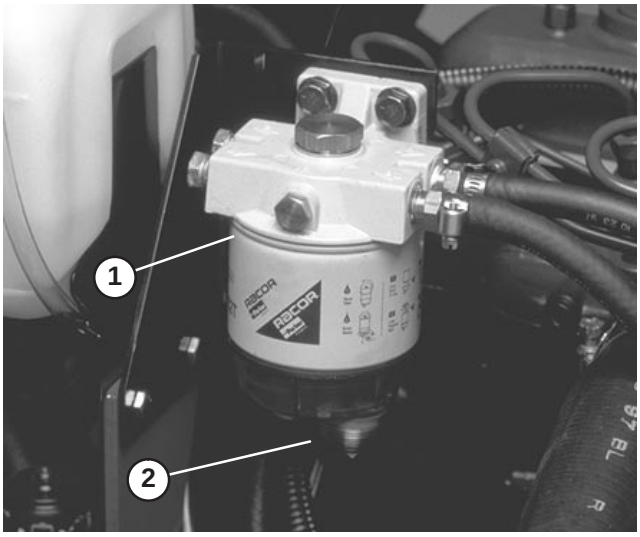

Figure 49

1. Fuel Filter/ Water Separator
2. Drain plug

Replace filter canister after every 400 hours of operation.

1. Clean area where filter canister mounts.

2. Remove filter canister and clean mounting surface.

3. Lubricate gasket on filter canister with clean oil.

4. Install filter canister by hand until gasket contacts mounting surface, then rotate an additional 1/2 turn.

Replacing the Fuel Pre Filter

Replace the fuel pre filter after every 400 operating hours or yearly, whichever occurs first.

1. Remove screw securing filter to frame rail.

2. Clamp both fuel lines that connect to the fuel filter so fuel cannot drain when lines are removed.

3. Loosen the hose clamps at both ends of the filter and pull fuel lines off filter.

4. Slide hose clamps onto ends of fuel lines. Push fuel lines onto fuel filter and secure them with hose clamps. Be sure arrow on side of filter points toward the injection pump.

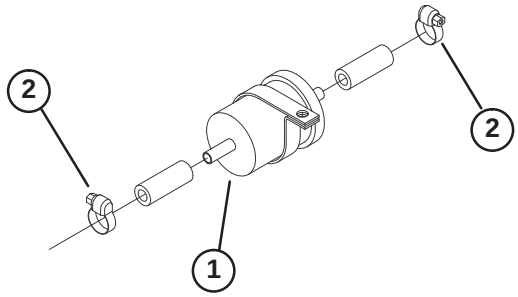

Figure 50

1. Fuel filter
2. Hose clamp

Bleeding Air from the Injectors

Note: This procedure should be used only if fuel system has been purged of air through normal priming procedures and engine will not start; refer to Bleeding Fuel System, page 25.

1. Loosen the pipe connection to the No. 1 nozzle and holder assembly.

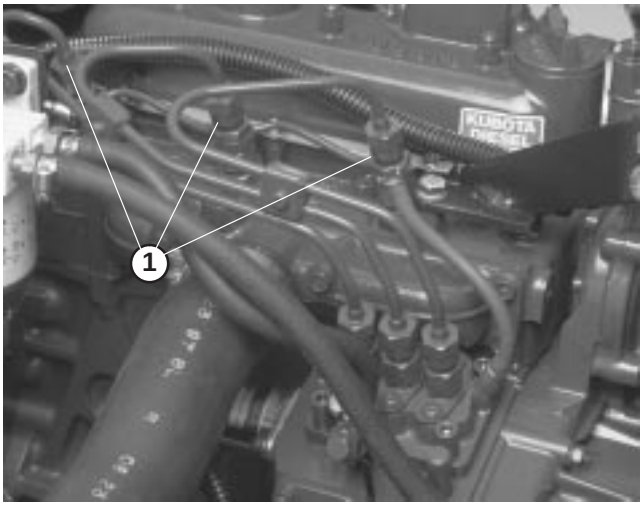

Figure 51

1. Fuel injector

2. Move throttle to **fast** position.

3. Turn key in key switch to **start** position and watch fuel flow around connector. Engine will crank. Turn key to **off** position when solid flow is observed.

4. Tighten pipe connector securely.

5. Repeat steps on remaining nozzles.

Servicing the Engine Cooling System

Removing Debris

Remove debris from screen, oil coolers and radiator daily, clean more frequently in dirty conditions.

1. Turn engine off and raise hood. Clean engine area thoroughly of all debris.

2. Loosen clamps and pull up on screen to slide it out of mounting tracks (Fig. 52). Clean screen thoroughly with water or compressed air.

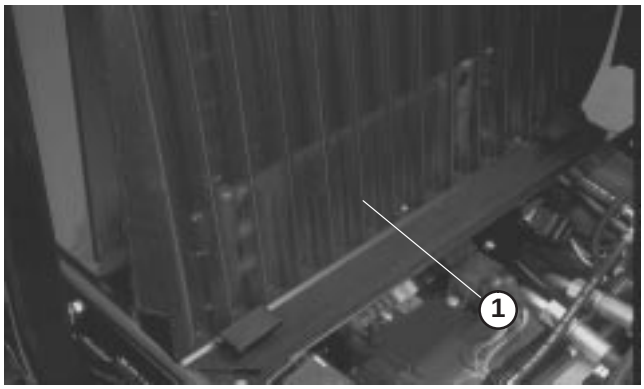

Figure 52

1. Screen

3. Slightly raise oil coolers and pivot forward (Fig. 53). Clean both sides of oil coolers and radiator area thoroughly with compressed air. Pivot oil coolers back into position.

4. Install screen and close hood.

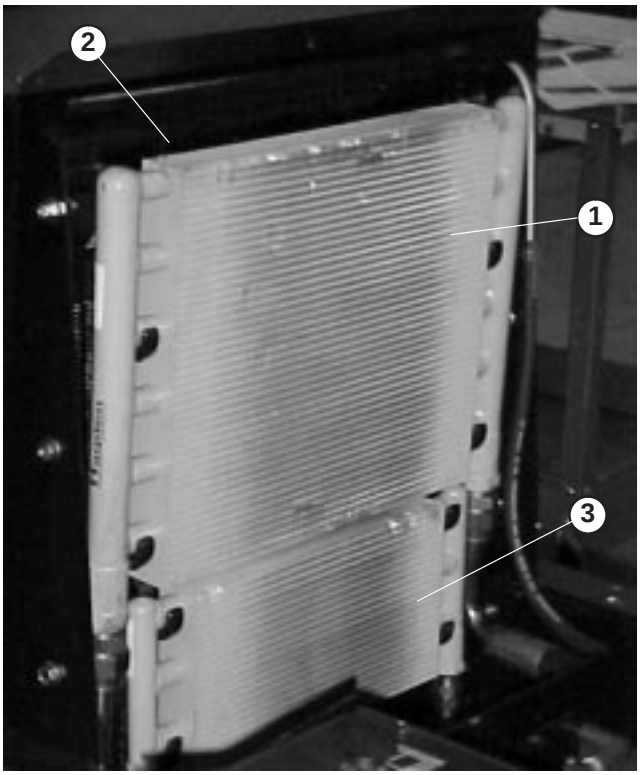

Figure 53

1. Reel oil cooler
2. Radiator
3. Transmission oil cooler

Servicing the Engine Belts

Check condition and tension of all belts after first day of operation and every 100 operating hours thereafter.

Servicing the Alternator Belt

1. Open hood.
2. Check tension by depressing belt midway between alternator and crankshaft pulleys with 22 lb. (98 N) of force. Belt should deflect 7/16 inch (11 mm) If deflection is incorrect, proceed to step 3. If correct, continue operation.

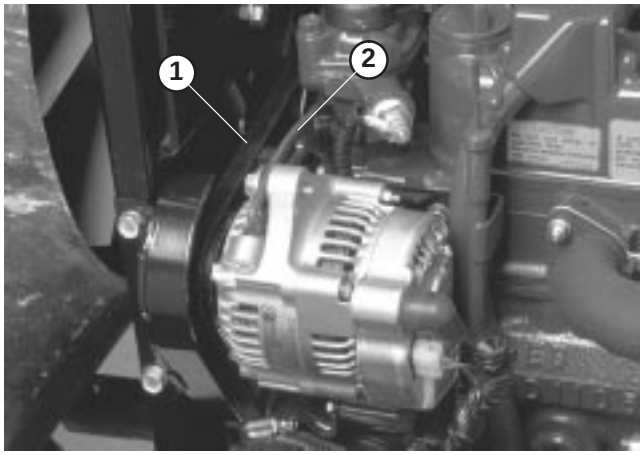

Figure 54

1. Alternator belt
2. Brace

3. Loosen bolt securing brace to engine and bolt securing alternator to brace.
4. Insert pry bar between alternator and engine and pry out on alternator.
5. When proper tension is achieved, tighten alternator and brace bolts to secure adjustment.

Servicing the Cooling Fan Belt

1. Loosen lock nut on belt tensioner lever.
2. Apply 5–10 lb. (22–44 N) of force at end of lever to set the proper tension on the fan belt.
3. Tighten lock nut to secure adjustment.

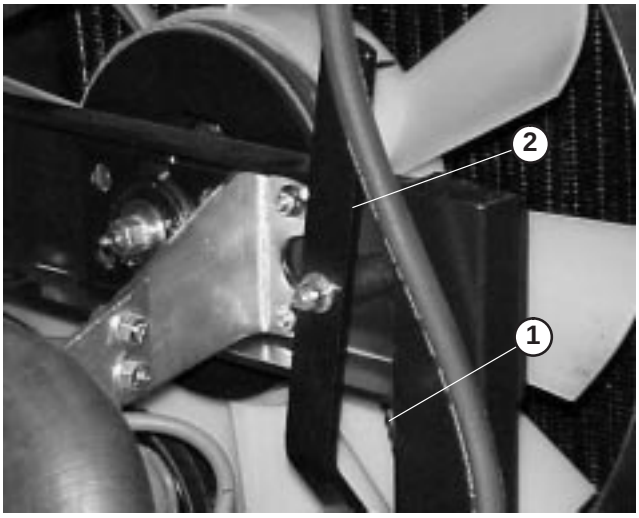

Figure 55

1. Cooling fan belt
2. Tensioner lever

Adjusting the Throttle

1. Position throttle lever forward so it stops against seat base slot.
2. Loosen the throttle cable connector on the lever arm at the injection pump.
3. Hold the injection pump lever arm against the high idle stop and tighten the cable connector.

Note: When tightened, the cable connector must be free to swivel.

4. Torque the lock nut, used to set the friction device on the throttle lever, to 40–55 in-lb (5–6 N•m) The maximum force required to operate the throttle lever should be 20 lb. (89 N).



Figure 56

1. Injection pump lever arm

Warning

Before servicing or making adjustments to the machine, stop the engine and remove the key from the switch. Lower the cutting units to the ground.

Changing the Hydraulic Fluid

Change hydraulic fluid after every 800 operating hours, in normal conditions. If fluid becomes contaminated, contact your local TORO distributor because the system must be flushed. Contaminated fluid looks milky or black when compared to clean oil.

1. Turn engine off and set parking brake.
2. Remove drain plug from bottom of reservoir and let hydraulic fluid flow into drain pan. Reinstall and tighten plug when hydraulic fluid stops draining.

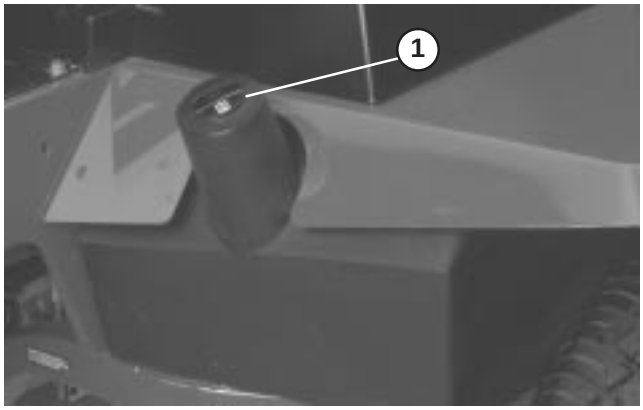

Figure 57

1. Hydraulic reservoir

3. Fill reservoir with approximately 8–1/2 gallons of hydraulic fluid. Refer to Checking Hydraulic Fluid, page 21.

Important Use only hydraulic fluids specified. Other fluids could cause system damage.

4. Install reservoir cap. Start engine and use all hydraulic controls to distribute hydraulic fluid throughout the system. Also check for leaks. Then stop the engine.
5. Check level of fluid and add enough to raise level to **full** mark on dipstick. **Do Not Over Fill.**

Replacing the Hydraulic Filter

The hydraulic system filter head is equipped with a service interval indicator. With the engine running, view the indicator, it should be in the **green** zone. When the indicator is in the **red** zone, the filter element should be changed.

Use the Toro replacement filter (Part No. 94-2621).

Important Use of any other filter may void the warranty on some components.

1. Position machine on a level surface, lower the cutting units, stop the engine, engage the parking brakes and remove key from ignition switch.
2. Clean area around filter mounting area. Place drain pan under filter and remove filter.

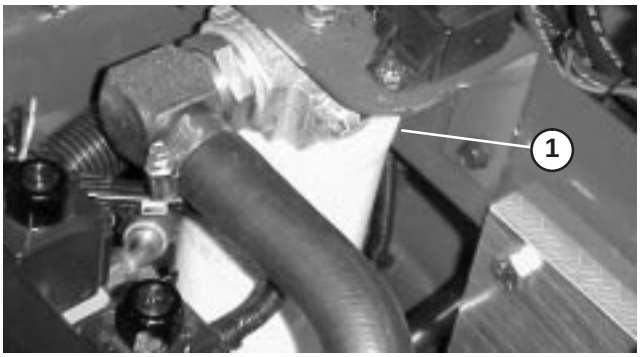

Figure 58

1. Hydraulic filter

3. Lubricate new filter gasket and fill the filter with hydraulic fluid.
4. Assure filter mounting area is clean. Screw filter on until gasket contacts mounting plate. Then tighten filter one–half turn.
5. Start engine and let run for about two minutes to purge air from the system. Stop the engine and check for leaks.

Checking Hydraulic Lines And Hoses

Daily, check hydraulic lines and hoses for leaks, kinked lines, loose mounting supports, wear, loose fittings, weather deterioration and chemical deterioration. Make all necessary repairs before operating.

Warning

Hydraulic fluid escaping under pressure can penetrate skin and cause injury.

- **If hydraulic fluid is injected into the skin it must be surgically removed within a few hours by a doctor familiar with this type of injury. Gangrene may result if this is not done.**
- **Keep body and hands away from pin hole leaks or nozzles that eject high pressure hydraulic fluid.**
- **Use cardboard or paper to find hydraulic leaks.**
- **Safely relieve all pressure in the hydraulic system before performing any work on the hydraulic system.**
- **Make sure all hydraulic fluid hoses and lines are in good condition and all hydraulic connections and fittings are tight before applying pressure to hydraulic system.**

Using the Hydraulic System Test Ports

The test ports are used to test pressure in the hydraulic circuits. Contact your local Toro distributor for assistance.

1. Test Port #1 is used to assist in trouble shooting the hydraulic circuit for the front cutting units and lift cylinders.



Figure 59

1. Test port number 1
2. Test port number 2

2. Test Port #2 is used to assist in trouble shooting the hydraulic circuit for the rear cutting units.
3. Test Port #3 is located on the rear of the hydrostatic transmission and is used to measure the charge pressure of the transmission.
4. Test Port #4 is located on the rear of the lift block and is used to assist in trouble shooting the hydraulic lift circuit.

Adjusting Traction Drive For Neutral

The machine must not creep when traction pedal is released. If it does creep, an adjustment is required.

1. Park machine on a level surface, shut engine off and lower cutting units to the floor. Depress only the right brake pedal and engage the parking brake.
2. Jack up left side of machine until front tire is off the shop floor. Support machine with jack stands to prevent it from falling accidentally.

Note: On 4 wheel drive models, left rear tire must also be off the shop floor or 4 wheel drive driveshaft must be removed.

3. Under right side of machine, loosen locknut on traction adjustment cam.

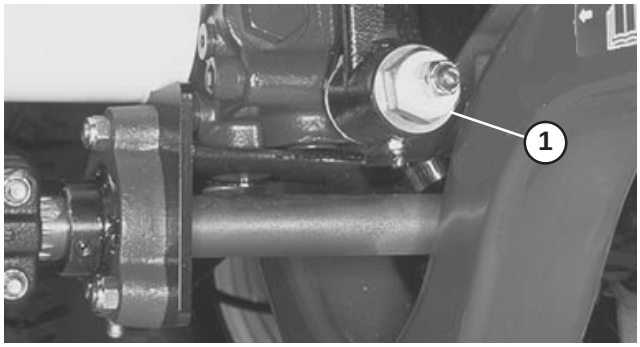

Figure 60

1. Traction adjustment cam

Warning

Engine must be running so final adjustment of the traction adjustment cam can be performed.

- **To avoid possible personal injury, keep hands, feet, face and other parts of the body away from the muffler, other hot parts of the engine, and other rotating parts.**

4. Start engine and rotate cam hex in either direction until wheel ceases rotation.
5. Tighten locknut securing adjustment.
6. Stop the engine and release the right brake. Remove jack stands and lower the machine to the shop floor. Test drive the machine to make sure it does not creep.

Adjusting the Cutting Unit Drop Rate

The cutting unit lift circuit is equipped with (3) adjustable valves used to ensure the cutting units do not drop too quickly and damage the turf. Adjust cutting units as follows:

Adjusting the Center Cutting Unit

1. Locate valve behind access panel above operator's platform (Fig. 61).
2. Loosen setscrew on valve and rotate valve approximately 1/2 turn clockwise.
3. Verify drop rate adjustment by raising and lowering cutting unit several times. Readjust as required.
4. After desired drop rate is attained, tighten setscrew to lock adjustment.

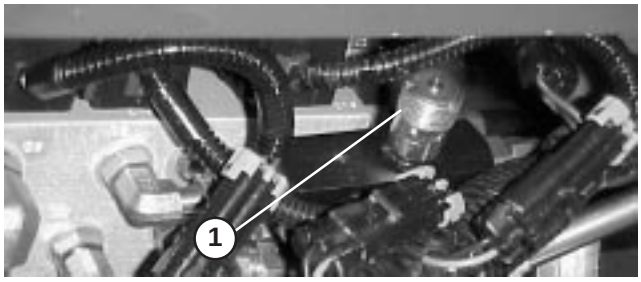

Figure 61

1. Center cutting unit adjustment valve

Adjusting the Outside Front Cutting Units

1. Locate valve on right side of lift block (Fig. 62).
2. Loosen setscrew on valve. Rotate valve 1/2 turn clockwise.
3. Verify drop rate adjustment by raising and lowering cutting units several times. Readjust as required.
4. After desired drop rate is attained, tighten set screw to lock adjustment.

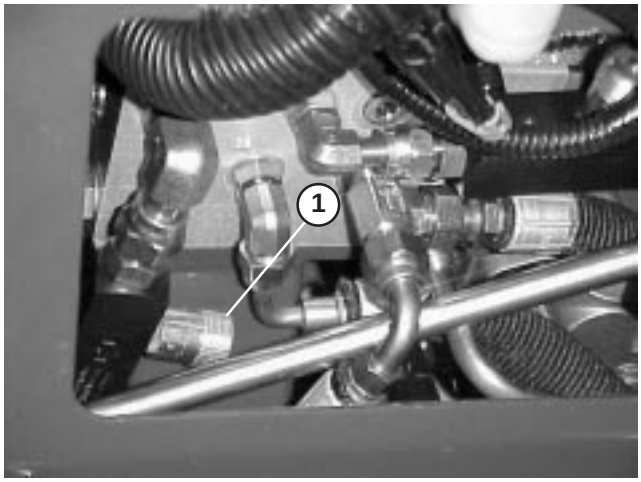

Figure 62

1. Outside front cutting unit adjustment valve

Adjusting the Rear Cutting Units

1. Raise hood and locate valve in center of machine behind engine (Fig. 63).

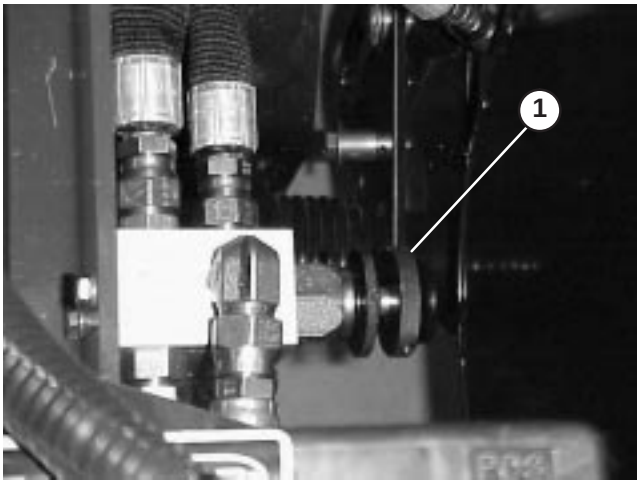

Figure 63

1. Rear cutting unit adjustment valve

2. Loosen locking ring on valve and rotate valve approximately 1/2 turn clockwise.
3. Verify drop rate adjustment by raising and lowering cutting units several times. Readjust as required.
4. After desired drop rate is attained, tighten locking ring to lock adjustment.

Checking and Adjusting Traction Linkage

Due to normal wear in the control linkage and hydrostatic transmission, an increased amount of force may be required to return the transmission to neutral. Periodically check the machine.

Checking the Traction Linkage

1. On a large, flat open area, drive the machine at full throttle and full traction speed.
2. Remove foot from traction pedal and measure the distance required for the machine to come to a stop.
3. If the distance required to stop is greater than 18 feet (5.5 meters) an adjustment to the traction linkage is required. Proceed to next step.

Adjusting the Traction Linkage

1. Park machine on a level surface, lower cutting units to the floor and shut engine **off**.
2. Connect brake pedals together with locking pin, push both pedals down and pull parking brake latch out.
3. Loosen outer hex nut securing eye bolt to spring anchor plate.

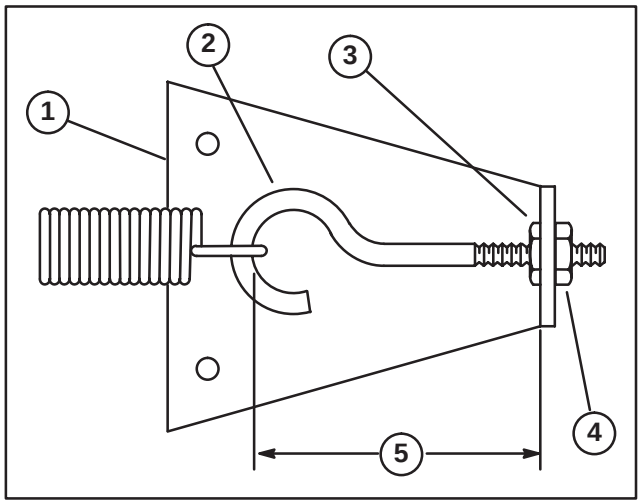

Figure 64

1. Spring anchor plate
2. Eye bolt
3. Inner locknut
4. Outer locknut
5. Shorten the distance to decrease the time required to stop the machine

4. Rotate, clockwise, until distance between inside of eye bolt loop and inside of spring anchor plate is shortened 1/8 inch (3 mm), as shown in figure 64. Tighten hex nut.
5. Operate the machine and check stopping distance. Repeat procedure if required.

Note: Shortening the distance between inside of eye bolt loop and inside of spring anchor plate increases the pedal force on the traction pedal. Therefore, do not over adjust.

Hydraulic Schematic

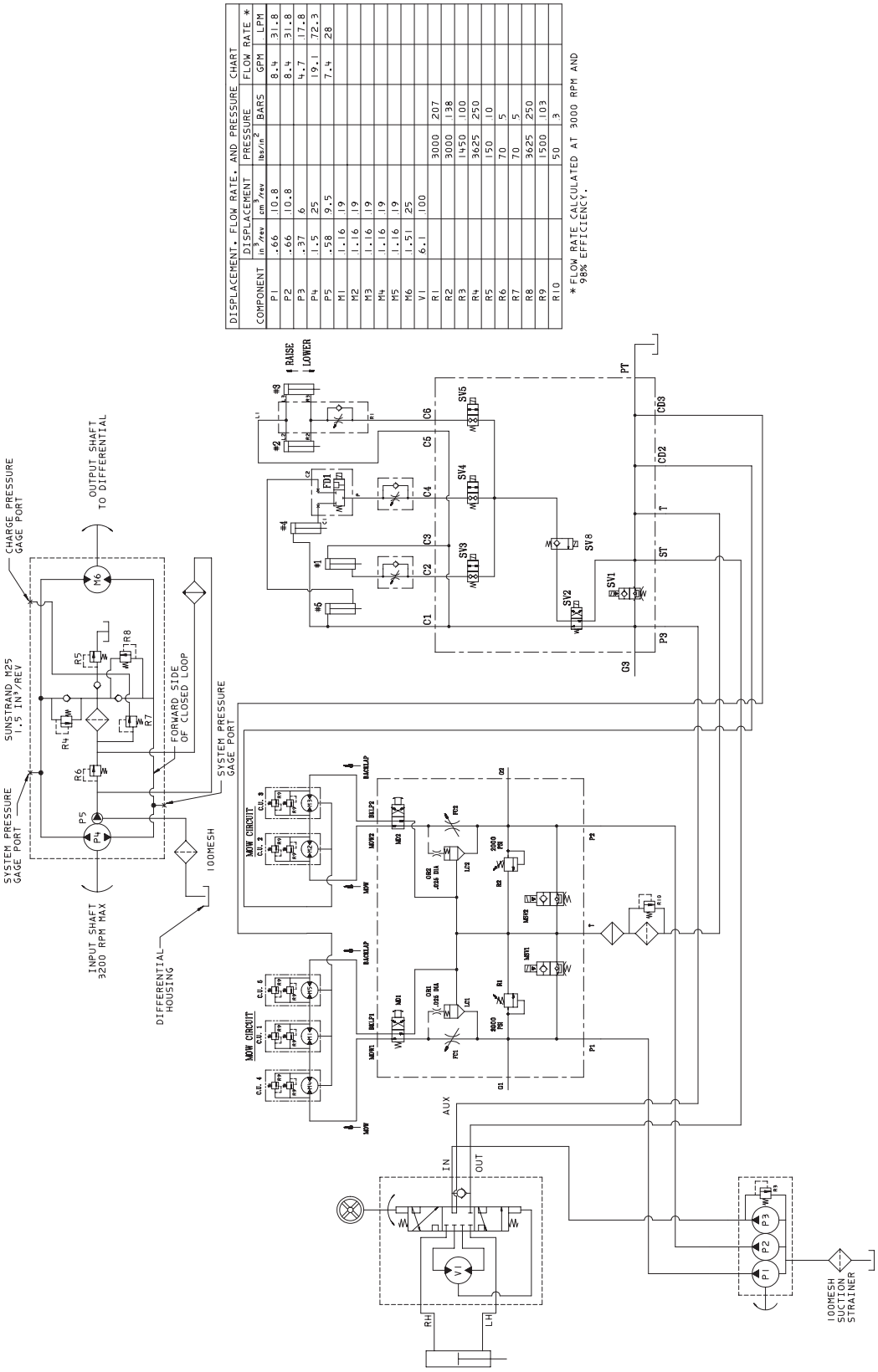

Warning

Before servicing or making adjustments to the machine, stop the engine and remove the key from the switch. Lower the cutting units to the ground.

Adjusting the Service Brakes

Adjust the service brakes when there is more than 1 inch (26 mm) of **free travel** of the brake pedal, or when the brakes do not work effectively. Free travel is the distance the brake pedal moves before braking resistance is felt.

1. Disengage locking pin from brake pedals so both pedals work independently of each other.
2. To reduce free travel of brake pedals, tighten the brakes – loosen front nut on threaded end of brake cable. Then tighten rear nut to move cable backward until brake pedals have 1/2 to 1 inch (13 mm to 26 mm) of free travel. Tighten front nuts after brakes are adjusted correctly.

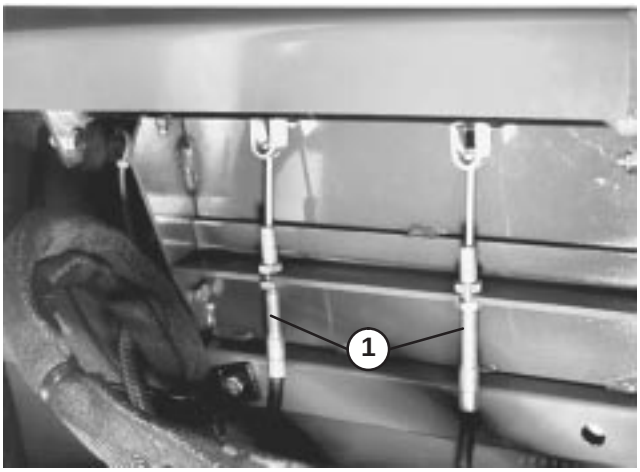

Figure 65

1. Brake cables

Changing the Transmission Fluid

Change the transmission fluid after every 800 hours of operation, in normal conditions.

1. Position machine on a level surface, lower the cutting units, stop the engine, engage the parking brakes and remove key from ignition switch.
2. Clean area around suction line on bottom of transmission. Place drain pan under line.

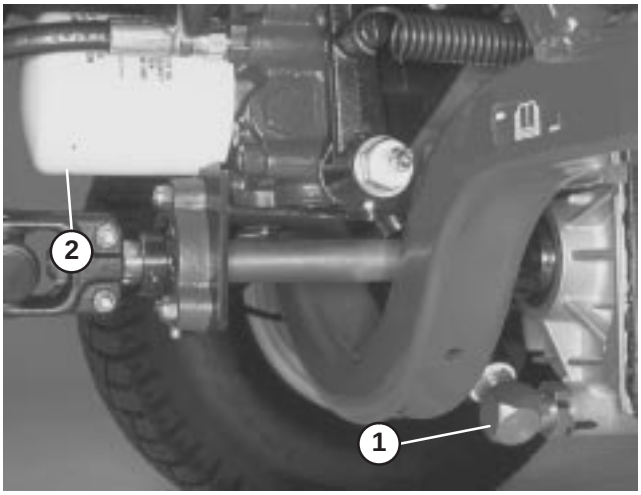

Figure 66

1. Transmission suction line
2. Transmission oil filter

3. Remove line from transmission allowing fluid to drain into drain pan.
4. Reinstall suction line to transmission.
5. Fill with oil; refer to Checking the Transmission Fluid, page 21.
6. Before starting the engine after changing transmission fluid, disconnect the run (ETR) solenoid on the engine, and crank the engine several times for 15 seconds. This allows the charge pump to fill the transmission with fluid before the engine is started.

Replacing the Transmission Filter

Change the transmission filter after the **first 10 hours** of operation and every 800 hours, thereafter.

Only the Toro replacement filter (Part No. 75-1330) can be used in the hydraulic system.

Important Use of any other filter may void the warranty on some components.

1. Position machine on a level surface, lower the cutting units, stop the engine, engage the parking brakes and remove key from ignition switch.
2. Clean area around filter mounting area. Place drain pan under filter and remove filter.
3. Lubricate new filter gasket and fill the filter with hydraulic oil.
4. Assure filter mounting area is clean. Screw filter on until gasket contacts mounting plate. Then tighten filter one–half turn.

5. Start engine and let run for about two minutes to purge air from the system. Stop the engine and check for leaks. Check fluid level and replenish if necessary.

Changing Rear Axle Lubricant
(Model 03551 Only)

After every 800 hours of operation the oil in the rear axle must be changed.

1. Position machine on a level surface.
2. Clean area around the drain plugs.
3. Remove plug allowing oil to drain into drain pans.
4. After oil is drained, **apply thread locking compound** on drain plug threads and reinstall in axle.

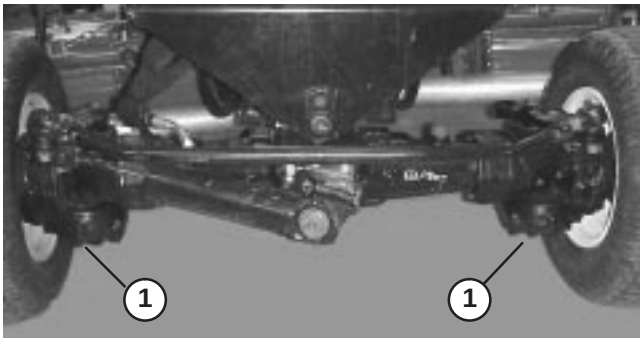

Figure 67

1. Drain plug

5. Fill axle with lubricant; refer to Checking the Rear Axle Lubricant, page 22.

Checking and Adjusting the Rear Wheel Toe–In

After every 800 operating hours or annually, check rear wheel toe-in.

1. Measure center-to-center distance (at axle height) at front and rear of steering tires. Front measurement must be within ±1/8 inch (3 mm) of the rear measurement.

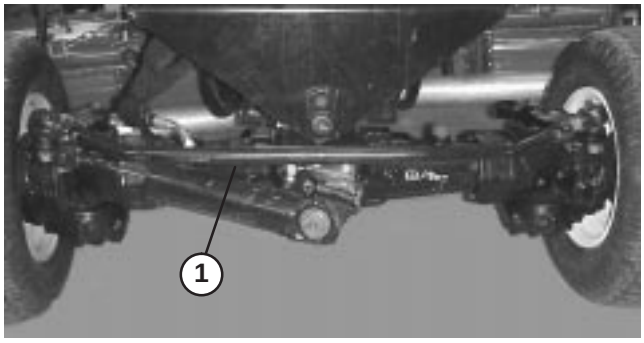

Figure 68

1. Tie rod

2. To adjust, loosen clamps at both ends of tie rod.
3. Rotate tie rod to move front of tire inward or outward.
4. Tighten tie rod clamps when adjustment is correct.

Servicing the Battery

Warning

CALIFORNIA

Proposition 65 Warning

Battery posts, terminals, and related accessories contain lead and lead compounds, chemicals known to the State of California to cause cancer and reproductive harm. *Wash hands after handling.*

Important Before welding on a machine, disconnect both cables from the battery, disconnect both wire harness plugs from the electronic control unit and the terminal connector from the alternator to prevent damage to the electrical system.

Warning

Battery terminals or metal tools could short against metal tractor components causing sparks. Sparks can cause the battery gasses to explode, resulting in personal injury.

- **When removing or installing the battery, do not allow the battery terminals to touch any metal parts of the machine.**
- **Do not allow metal tools to short between the battery terminals and metal parts of the machine.**

Warning

Incorrect battery cable routing could damage the tractor and cables causing sparks. Sparks can cause the battery gasses to explode, resulting in personal injury.

- **Always *disconnect* the negative (black) battery cable before disconnecting the positive (red) cable.**
- **Always *connect* the positive (red) battery cable before connecting the negative (black) cable.**

Note: Check battery condition weekly or after every 50 hours of operation. Keep terminals and entire battery case clean because a dirty battery will discharge slowly. To clean the battery, wash the entire case with solution of baking soda and water. Rinse with clear water. Coat the battery posts and cable connectors with Grafo 112X (skin–over) grease (Toro Part No. 505-47) or petroleum jelly to prevent corrosion.

Servicing the Fuses

There are 6 fuses in the machines electrical system. They are located below control panel (Figures 69 and 70).



Figure 69

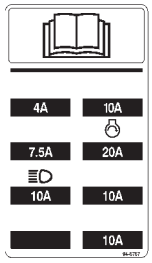

Figure 70

Adjusting the Parking Brake Switch

The parking brake uses a proximity sensor located under the cover of the steering tower. This sensor is adjusted so the sensor locates a flag on the latch rod when the parking brake is released.

Using the Ace Diagnostic tool verify the brake sensor opens and closes properly. The parking brake light on the Diagnostic tool should be on when engaged and off when disengaged. If the light remains on when the parking brake is released the engine will stop when the traction system is engaged. Should this condition exist adjust the sensor using the Diagnostic tool to verify its operation.

The adjustment is accomplished by moving the sensor within its slotted hole. The position of the flag on the latch rod is over the sensor target area when the parking brake is released. Ensure that in the engaged position the flag moves away from the target zone of the sensor.

Installing Optional Lighting

Important If optional lighting is be added to the traction unit, use the following schematic and part numbers to prevent damage to the traction units electrical system.

Schematic For Optional Lighting

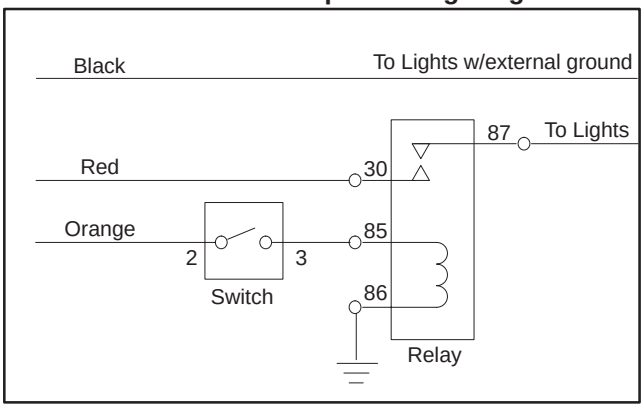

Switch*
Toro Part No. 75-1010
Honeywell Part No. 1TL1-2

Relay
Toro Part No. 70-1480
Bosch Part No. 0-332-204

Black, red and orange wires are located in control console.

Add 10 Amp fuse to fuse block at location shown

*** Punch out in control panel provided for switch installation**

Figure 71

Note: Make sure a good ground is achieved to prevent damage to traction unit.

Wiring Diagram

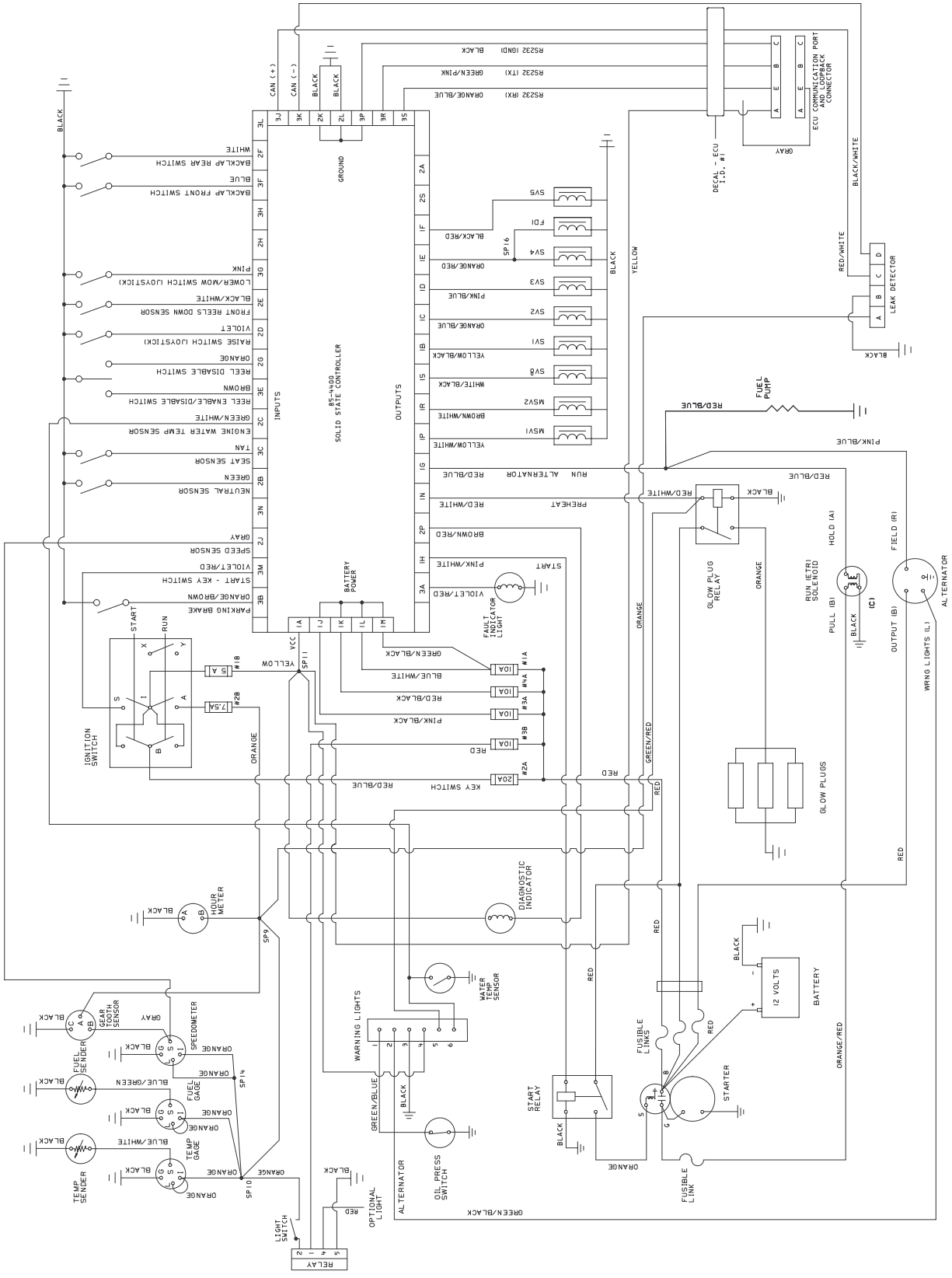

Backlapping

Danger

The reels may stall while backlapping and could restart suddenly. Contact with the reels during backlapping will cause personal injury.

- **Never place hands or feet in the reel area while the engine is running.**
- **Never attempt to turn the reels by hand or foot or touch the reels while backlapping.**
- **Never change engine speed while backlapping. Only backlap at idle speed.**
- **Stop the engine and move the desired reel speed selector knob(s) one position closer to "13."**

Note: When backlapping, the front units all operate together, and the rear units operate together.

1. Position the machine on a level surface, lower the cutting units, stop the engine, engage the parking brake, and move the Enable/Disable switch to disable position.
2. Unlock and raise the seat to expose controls.
3. Locate the reel speed selector knobs and backlap knobs (Fig. 72). Rotate the desired backlap knob(s) to the backlap position and the desired reel speed selector knob(s) to position **1**.

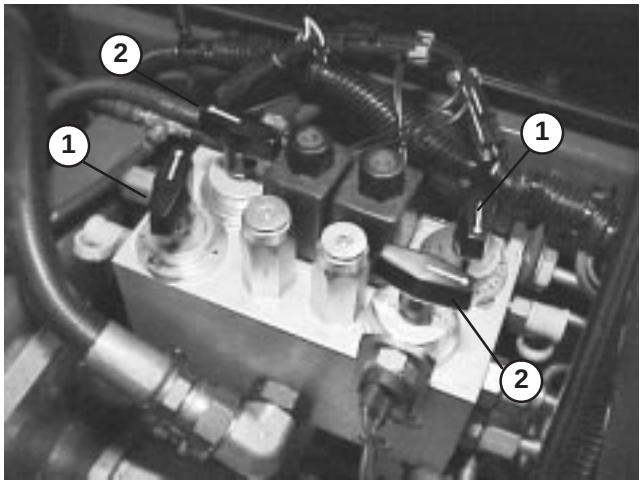

Figure 72

1. Reel speed selector knobs
2. Backlap knobs

Note: Backlapping speed may be increased by moving the reel speed selector knob toward "13." Each position will increase speed approximately 100 rpm. After changing selector, wait 30 seconds for the system to stabilize at the new speed.

4. Make initial reel to bedknife adjustments appropriate for backlapping on all cutting units which are to be backlapped.
5. Start engine and run at **idle speed**.

Caution

Contact with the reels or other moving parts can result in personal injury.

- **Keep finger, hands, and clothing away from the reels and other moving parts.**
- **Never use a short handles brush to apply lapping compound.**

6. Select either front, rear, or both backlap knobs to determine which reels will be backlapped.
7. Move Enable/Disable switch to **enable** position. Move Lower Mow/Lift control forward to start backlapping operation on designated reels.
8. Apply lapping compound with a long handle brush (Toro Part No. 29-9100). Never use a short handled brush (Fig. 73).

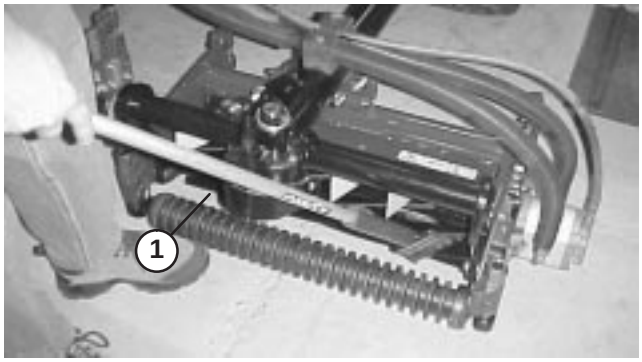

Figure 73

1. Long handle brush

9. If reels stall or become erratic while backlapping, stop backlapping by moving the Lower Mow/Lift control lever rearward. Once the reels have stopped, move the desired reel speed selector knob(s) one position closer to **13**. Resume backlapping by moving the Lower Mow/Lift control lever forward.

10. To make an adjustment to the cutting units while backlapping, turn reels **off** by moving the Lower Mow/Raise lever rearward; move the Enable/Disable switch to **disable** and turn the engine **off**. After adjustments have been completed, repeat steps 5–9.

11. Backlap until the reels can cut paper.

Maintaining the Cutting Unit

1. When the cutting unit is adequately sharpened, a burr will form on the front edge of the knife. Using a file, carefully remove the burr without dulling the cutting edge (Fig. 74).

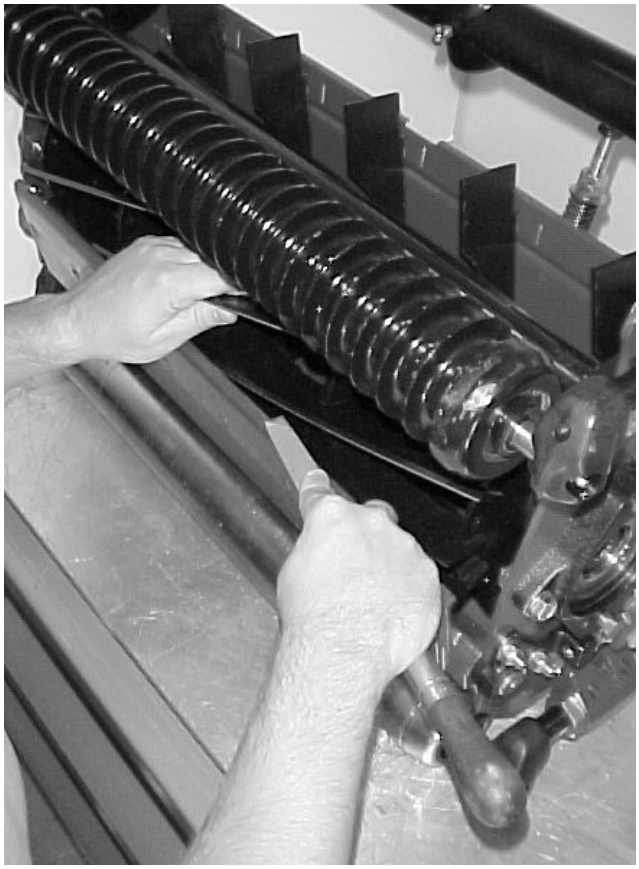

Figure 74

2. Repeat procedure for all cutting units to be backlapped.

When backlap operation has been completed, return the backlap knobs to the forward flow position, lower seat and wash all lapping compound off cutting units. Adjust cutting unit reel to bedknife as needed.

Note: If the backlap knobs are not returned to the forward flow position after backlapping, the cutting units will not raise or function properly.

Storage

Traction Unit

1. Thoroughly clean the traction unit, cutting units and the engine.
2. Check the tire pressure. Inflate all traction unit tires to 10–15 psi.
3. Check all fasteners for looseness; tighten as necessary.
4. Grease or oil all grease fittings and pivot points. Wipe up any excess lubricant.
5. Lightly sand and use touch–up paint on painted areas that are scratched, chipped, or rusted. Repair any dents in the metal body.
6. Service the battery and cables as follows:
   A. Remove the battery terminals from the battery posts.
   B. Clean the battery, terminals, and posts with a wire brush and baking soda solution.
   C. Coat the cable terminals and battery posts with Grafo 112X skin–over grease (Toro Part No. 505-47) or petroleum jelly to prevent corrosion.
   D. Slowly recharge the battery every 60 days for 24 hours to prevent lead sulfation of the battery.

Warning

Charging the battery produces gasses that can explode.

Never smoke near the battery and keep sparks and flames away from battery.

Engine

1. Drain the engine oil from the oil pan and replace the drain plug.
2. Remove and discard the oil filter. Install a new oil filter.
3. Refill oil pan with 128 ounces of SAE10W-30 motor oil.
4. Start the engine and run at idle speed for approximately two minutes.
5. Stop the engine.
6. Thoroughly drain all fuel from the fuel tank, lines and the fuel filter/water separator assembly.
7. Flush the fuel tank with fresh, clean diesel fuel.
8. Re–secure all fuel system fittings.
9. Thoroughly clean and service the air cleaner assembly.
10. Seal the air cleaner inlet and the exhaust outlet with weatherproof tape.
11. Check anti–freeze protection and add as needed for expected minimum temperature in your area.

The Toro General Commercial Products Warranty

A Two-Year Limited Warranty

Conditions and Products Covered

The Toro Company and its affiliate, Toro Warranty Company, pursuant to an agreement between them, jointly warrant your Toro Commercial Product ("Product") to be free from defects in materials or workmanship for two years or 1500 operational hours*, whichever occurs first. Where a warrantable condition exists, we will repair the Product at no cost to you including diagnosis, labor, parts, and transportation. This warranty begins on the date the Product is delivered to the original retail purchaser.

* Product equipped with hour meter

Instructions for Obtaining Warranty Service

You are responsible for notifying the Commercial Products Distributor or Authorized Commercial Products Dealer from whom you purchased the Product as soon as you believe a warrantable condition exists.

If you need help locating a Commercial Products Distributor or Authorized Dealer, or if you have questions regarding your warranty rights or responsibilities, you may contact us at:

Toro Commercial Products Service Department
Toro Warranty Company
8111 Lyndale Avenue South
Bloomington, MN 55420-1196
952-888-8801 or 800-982-2740
E-mail: commercial.service@toro.com

Owner Responsibilities

As the Product owner, you are responsible for required maintenance and adjustments stated in your operator's manual. Failure to perform required maintenance and adjustments can be grounds for disallowing a warranty claim.

Items and Conditions Not Covered

Not all product failures or malfunctions that occur during the warranty period are defects in materials or workmanship. This express warranty does not cover the following:

- Product failures which result from the use of non-Toro replacement parts, or from installation and use of add-on, modified, or unapproved accessories
- Product failures which result from failure to perform required maintenance and/or adjustments
- Product failures which result from operating the Product in an abusive, negligent or reckless manner
- Parts subject to consumption through use unless found to be defective. Examples of parts which are consumed, or used up, during normal Product operation include, but are not limited to, blades, reels, bedknives, tines, spark plugs, castor wheels, tires, filters, belts, etc.
- Failures caused by outside influence. Items considered to be outside influence include, but are not limited to, weather, storage practices, contamination, use of unapproved coolants, lubricants, additives, or chemicals, etc.
- Normal "wear and tear" items. Normal "wear and tear" includes, but is not limited to, damage to seats due to wear or abrasion, worn painted surfaces, scratched decals or windows, etc.

Parts

Parts scheduled for replacement as required maintenance are warranted for the period of time up to the scheduled replacement time for that part.

Parts replaced under this warranty become the property of Toro. Toro will make the final decision whether to repair any existing part or assembly or replace it. Toro may use factory remanufactured parts rather than new parts for some warranty repairs.

General Conditions

Repair by an Authorized Toro Distributor or Dealer is your sole remedy under this warranty.

Neither The Toro Company nor Toro Warranty Company is liable for indirect, incidental or consequential damages in connection with the use of the Toro Products covered by this warranty, including any cost or expense of providing substitute equipment or service during reasonable periods of malfunction or non-use pending completion of repairs under this warranty. Except for the Emissions warranty referenced below, if applicable, there is no other express warranty. All implied warranties of merchantability and fitness for use are limited to the duration of this express warranty.

Some states do not allow exclusions of incidental or consequential damages, or limitations on how long an implied warranty lasts, so the above exclusions and limitations may not apply to you.

This warranty gives you specific legal rights, and you may also have other rights which vary from state to state.

Note regarding engine warranty: The Emissions Control System on your Product may be covered by a separate warranty meeting requirements established by the U.S. Environmental Protection Agency (EPA) and/or the California Air Resources Board (CARB). The hour limitations set forth above do not apply to the Emissions Control System Warranty. Refer to the Engine Emission Control Warranty Statement printed in your operator's manual or contained in the engine manufacturer's documentation for details.

Countries Other than the United States or Canada

Customers who have purchased Toro products exported from the United States or Canada should contact their Toro Distributor (Dealer) to obtain guarantee policies for your country, province, or state. If for any reason you are dissatisfied with your Distributor's service or have difficulty obtaining guarantee information, contact the Toro importer. If all other remedies fail, you may contact us at Toro Warranty Company.

Part No. 374-0031 Rev. a