Form No. 3481-193 Rev A

TORO®

Count on it.

Parts Catalog

TimeCutter® ZS4200T Zero Turn

Riding Mower

Model No. 75781—Serial No. 400000000 and Up

Register at www.Toro.com.
Original Instructions (EN)

CE

3481-193 A

Ordering Replacement Parts

To order replacement parts, please supply the part number, the quantity, and the description of each part desired.

Understanding Reference Numbers

Each identified part in an illustration has a reference number. The reference number for a part also appears in the parts list, along with other information about the part.

This catalog uses two special reference number formats, one to indicate parts in a service assembly and another to indicate the quantity of a given part in an illustration.

Service Assembly Reference Numbers

Parts in service assemblies have reference numbers in the form a:b. The a represents the reference number of the entire service assembly and the b represents a sequential number unique to each part within the service assembly.

For example, a wheel assembly might be identified by reference number 6, the tire by 6:1, the valve by 6:2, and the wheel by 6:3. When you order the assembly identified by reference number 6, you receive all parts identified by reference numbers 6:1,6:2, and 6:3. However, you may also order any part individually. Reference numbers of this type appear in illustration and in parts lists.

Reference Numbers Indicating Quantity

In an illustration, if a reference number indicates more than one part, the reference number has the form nX y. The n represents the quantity of the part, the X is the multiplication symbol, and the y represents the reference number.

For example, in an illustration, the reference number 2X 37 means that two of the parts identified by reference number 37 are indicated.

Contents

Frame Assembly 4
Deck Lift Assembly 6
Caster Fork and Wheel Assembly 8
Traction Drive Assembly 10
LH Hydro Transmission Assembly No. 139-7450 12
RH Hydro Transmission Assembly No. 139-7451 14
Brake Assembly 16
Rear Tire Assembly 18
Seat Pan Assembly 20
Motion Control Assembly 22
Engine and Muffler Assembly 24
Fuel System Assembly 26
Electrical Assembly 28
Deck and Decal Assembly 30
42 Inch Mulch Plug Assembly No. 137-5034 32
Model Specific Assembly 34
Clutch Assembly 36
Attachments and Accessories 38

© 2026—The Toro® Company
8111 Lyndale Avenue South
Bloomington, MN 55420

Contact us at www.Toro.com.
Printed in the USA.
All Rights Reserved

Frame Assembly

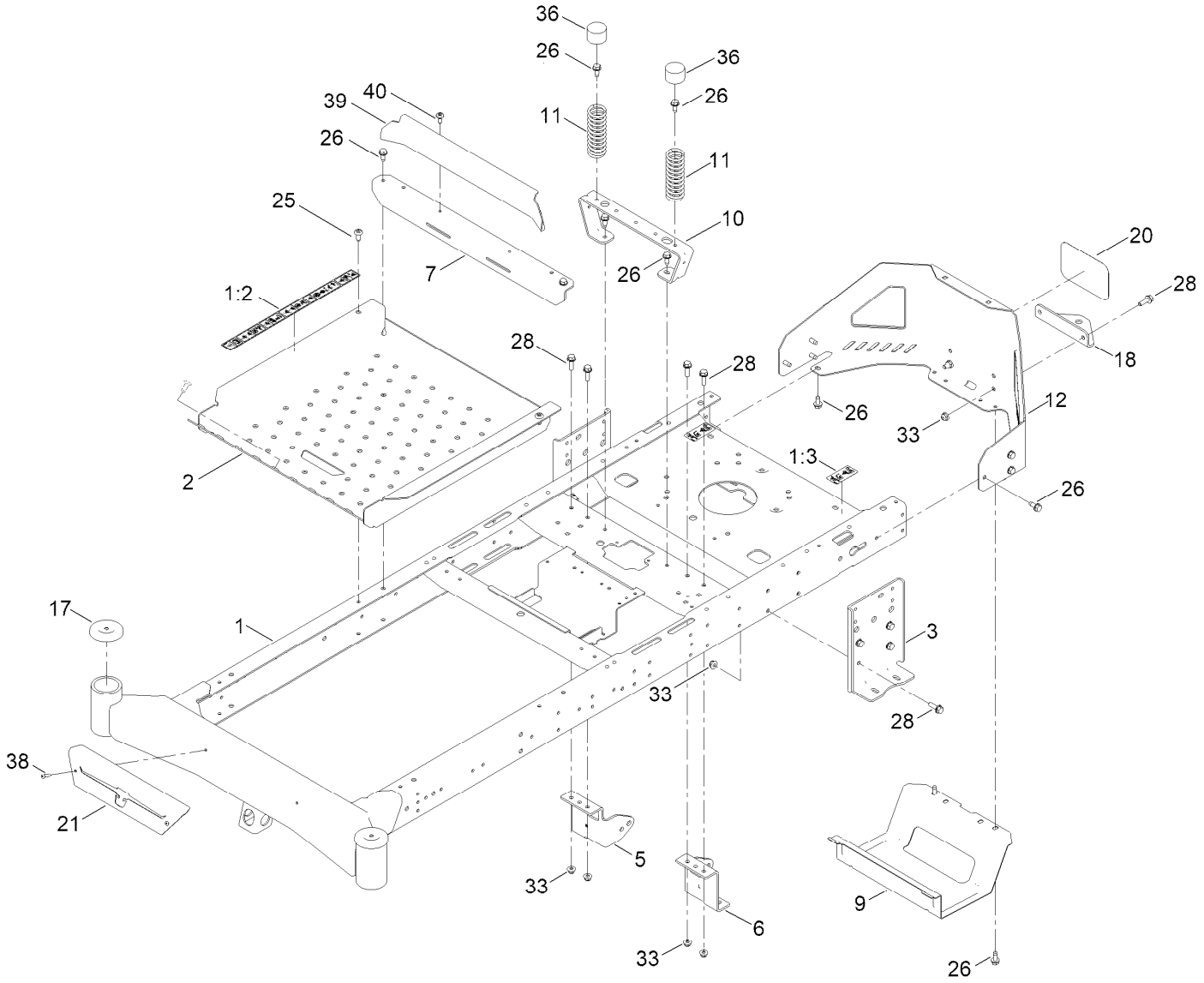

Frame Assembly (continued)

Ref.	Part Number	Qty.	Description
1	164-3314	1	Frame W/ Decals ASM
1:2	144-5288	1	Decal-Warning
1:3	121-2989	2	Decal-Bypass
2	164-3324	1	Pan-Floor ASM
3	138-7520-01	2	Plate-Mount, Hydro
5	137-7020-01	1	Mount-Hydro, Front (Right)
6	139-3211-01	1	Mount-Hydro, Front (Left)
7	138-9791-01	1	Brace-Cross
9	138-0867-03	1	Guard-Muffler
10	138-6036-03	1	Support-Seat
11	138-2548	2	Spring-Compression
12	138-9820-05	1	Guard-Engine

Ref.	Part Number	Qty.	Description
17	163-6081-05	2	Cap-Castor
18	117-1232-03	1	Bracket-Hitch
20	108-8452	1	Decal-Logo
21	163-6069-05	1	Plate-Front
25	138-9753	3	Screw
26	32144-70	16	Screw-HWHTF
28	139-2596	14	Screw-HHF
33	119-4041	14	Nut-HF
36	701178	2	Cap-Protector
38	130-8451	2	Rivet-Trifold
39	164-0289	1	Plate-Kick
40	120-7950	2	Screw-Torx

Deck Lift Assembly

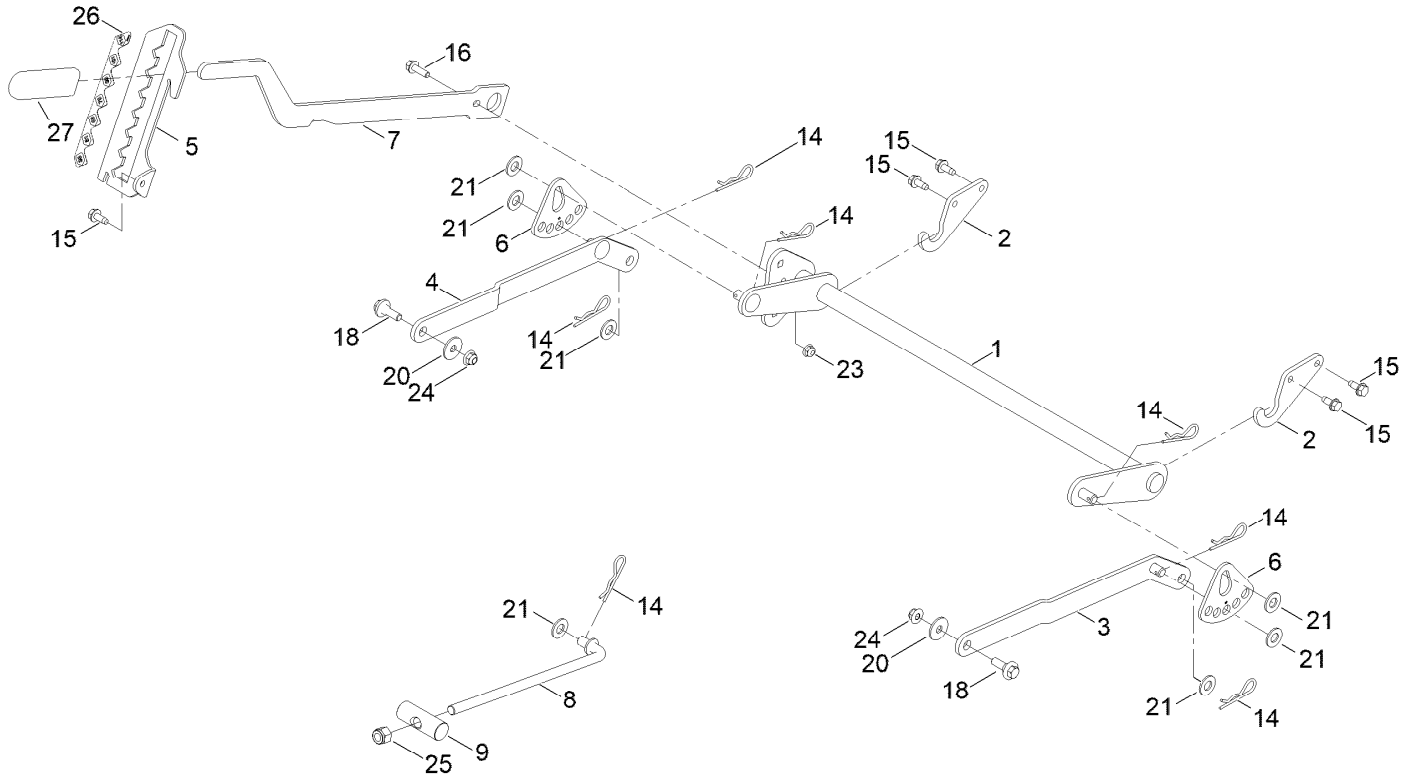

Deck Lift Assembly (continued)

Ref.	Part Number	Qty.	Description
1	137-7093-03	1	Deck Lift ASM
2	138-6021	2	Bracket-Pivot, Decklift
3	137-9844	1	LH Arm ASM
4	137-9846	1	RH Arm ASM
5	139-2350-01	1	Bracket-HOC
6	138-2564	2	Plate-Adjustment, HOC
7	137-7087-03	1	Lever-Lift
8	138-6050	1	Rod-Mount, Deck
9	119-8810	1	Pin-Pivot
14	139-2562	7	Pin-Hair

Ref.	Part Number	Qty.	Description
15	32144-70	5	Screw-HWHTF
16	139-2596	1	Screw-HHF
18	137-9847	2	Screw-Shoulder
20	140-5063	2	Washer-Hardened
21	139-2611	7	Washer-Flat
23	119-4041	1	Nut-HF
24	119-4042	2	Nut-HF, NI
25	139-1725	1	Nut-Hex
26	140-2748	1	Decal-HOC
27	1-633268	1	Grip-Lever

Caster Fork and Wheel Assembly

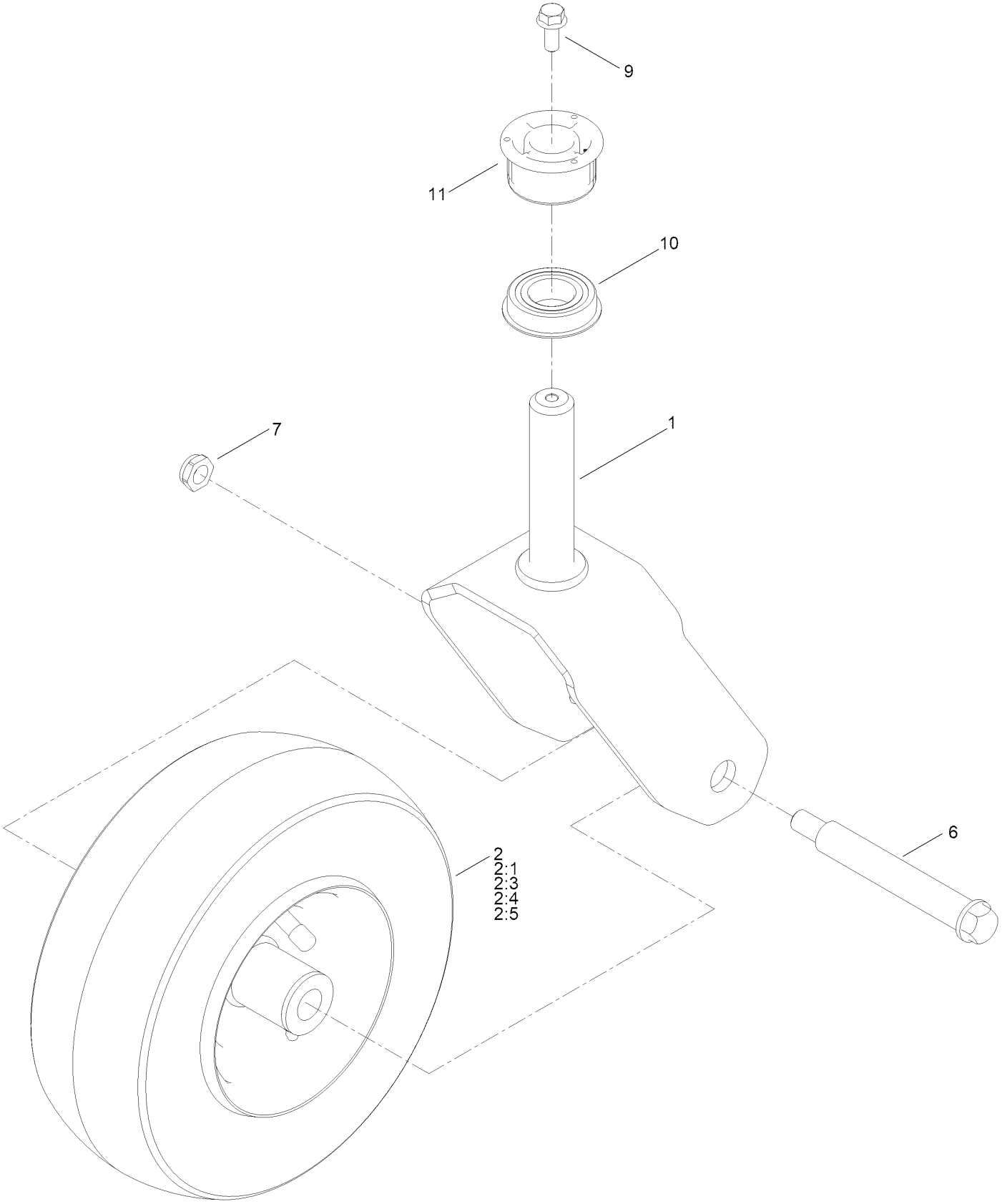

Caster Fork and Wheel Assembly (continued)

Ref.	Part Number	Qty.	Description
1	163-6077-01	2	Fork ASM [red]
2	147-2935	2	Tire ASM
2:1	147-2936	1	Tire
2:3	114-1640	2	Bushing-Flange
2:4	232-27	1	Stem-Valve
2:5	302-5	1	Fitting-Grease

Ref.	Part Number	Qty.	Description
6	163-6028	2	Screw-Shoulder HHF
7	139-2617	2	Nut-Lock, NI
9	164-3341	2	Screw-HHF
10	163-6080	2	Bearing-Ball
11	164-0219	2	Bushing-Flange

Traction Drive Assembly

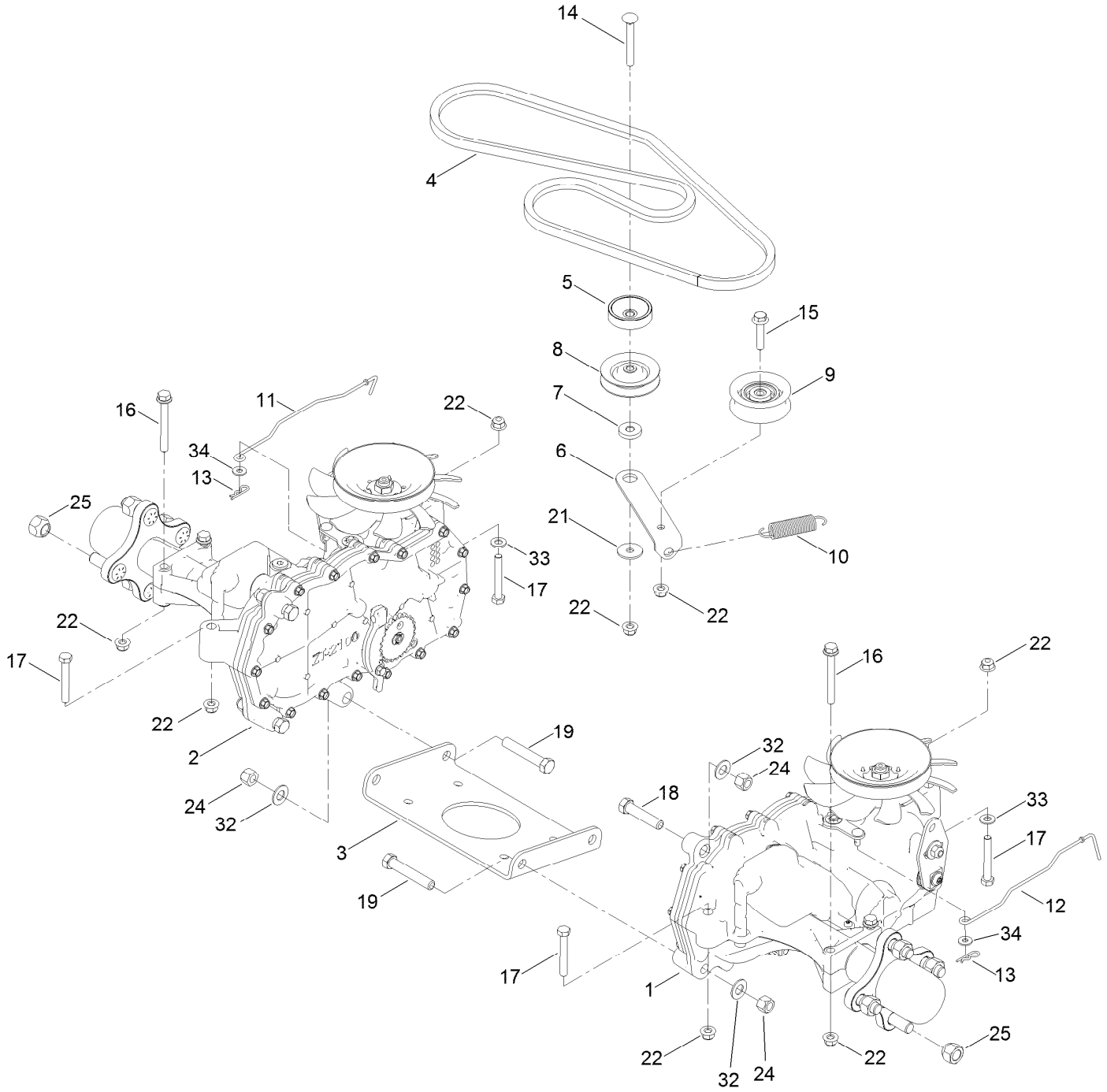

Traction Drive Assembly (continued)

Ref.	Part Number	Qty.	Description
1	139-7450	1	LH Hydro Transaxle ASM
2	139-7451	1	RH Hydro Transaxle ASM
3	138-2571-03	1	Crossplate-Hydro
4	139-2399	1	V-Belt
5	138-9809	1	Spacer
6	138-7276	1	Arm-Idler
7	138-7277	1	Spacer-Arm, Idler
8	68-0030	1	Idler
9	138-7597	1	Pulley-Idler, Flat
10	137-7040	1	Spring-Return, Pedal
11	138-7245	1	Rod-Bypass, RH
12	138-7243	1	Rod-Bypass, LH
13	137-3083	2	Pin-Hair

Ref.	Part Number	Qty.	Description
14	139-2588	1	Screw-CARR
15	140-5024	1	Screw-HHF
16	138-7590	4	Screw-HHF
17	120-9738	4	Screw-HH
18	139-2605	2	Screw-HH
19	139-2603	4	Screw-HH
21	5-4460	1	Washer-Pivot
22	119-4041	10	Nut-HF
24	119-4039	6	Nut-Hex
25	139-2564	8	Nut-Lug
32	139-2610	6	Washer-Flat
33	120-9683	2	Washer-Plain
34	119-8952	2	Washer-Spcl

LH Hydro Transmission Assembly No. 139-7450

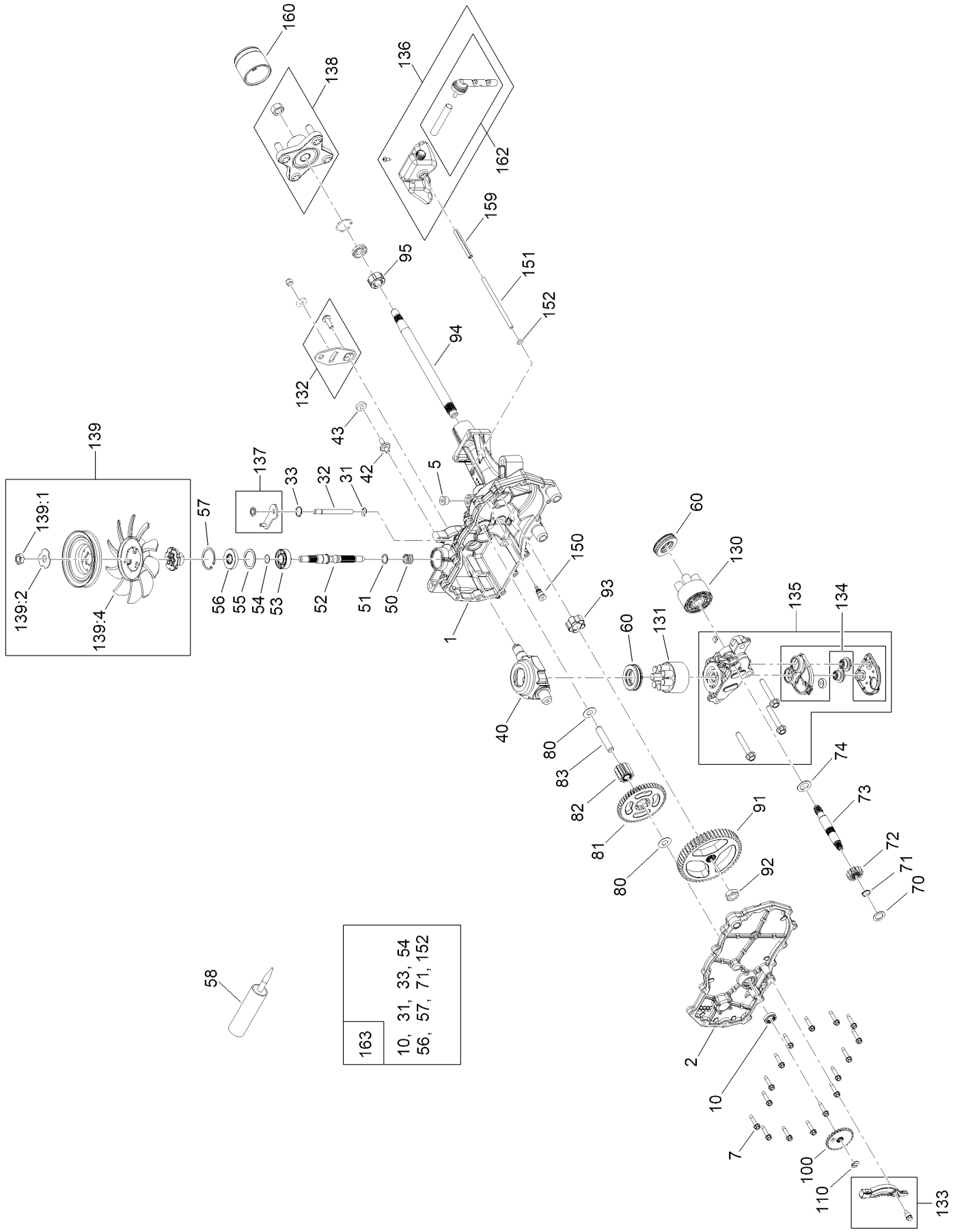

LH Hydro Transmission Assembly No. 139-7450 (continued)

Ref.	Part Number	Qty.	Description
1	120-5532	1	Main Housing ASM
2	120-5534	1	Housing Side Kit
5	104-2189	1	Plug-Thread, Straight
7	117-5359	16	Screw-HHF
10	104-2147	1	Sealant, Silicone - Non-Flammable ●
31	106-8677	1	Ring-Retaining, External
32	106-8678	1	Rod-Bypass
33	106-8679	1	Ring-Retaining, Internal
40	104-5304	1	Swashplate-Trunnion
42	104-2116	1	Stud
43	112-9853	1	Puck-Friction
50	133-1793	1	Spring-Block
51	120-5538	1	Washer
52	104-5306	1	Shaft-Input
53	104-5311	1	Bearing-Ball
54	104-5307	1	Ring-Retaining
55	104-5308	1	Spacer
56	104-5310	1	Seal-Lip
57	104-5309	1	Ring-Retaining
58	104-2147	1	Sealant, Silicone - Non-Flammable
60	94-6922	2	Bearing-Thrust
70	104-5339	1	Washer-Flat
71	104-5340	1	Ring-Retaining
72	104-5316	1	Gear-Pinnion, 13T
73	106-8683	1	Shaft-Motor
74	104-5360	1	Washer
80	94-1933	1	Washer
81	104-5317	1	Gear-10T/48T
82	104-5318	1	Gear-Jackshaft, 10T
83	104-5329	1	Pin-Jackshaft
91	120-5539	1	Gear-Bull
92	104-2142	1	Nut-HJ
93	115-8314	1	Bushing-Inboard
94	120-5540	1	Shaft-Axle
95	120-5541	1	Bearing-Sleeve
100	106-8694	1	Disc-Brake, Cog
110	106-8677	1	Ring-Retaining, External
130	103-2666	1	Cylinder Block Kit
131	110-8561	1	Pump Block ASM
132	117-5362	1	Control Arm Kit
133	106-8688	1	Brake Arm Kit
134	112-9861	1	Center Section Filter Kit
135	114-1634	1	Filter Kit
136	121-5730	1	RH Expansion Tank Kit
137	120-5549	1	Bypass Kit
138	121-5731	1	Hub Kit
139	135-7349	1	Fan And Pulley Kit
139:1	116-9714	1	Nut-HJ
139:2	116-9708	1	Washer-Slotted
139:4	135-7364	1	Fan 7.0 X 10 Blade
150	104-5349	1	Fitting-SAE
151	115-8302	1	Hose
152	104-5361	1	O-Ring
159	121-5728	1	Case-Tube
160	125-0041	1	Cap-Axle
162	139-3278	1	Breather ASM Kit
163	120-7103	1	Seal And Ring Kit

● Not illustrated

RH Hydro Transmission Assembly No. 139-7451

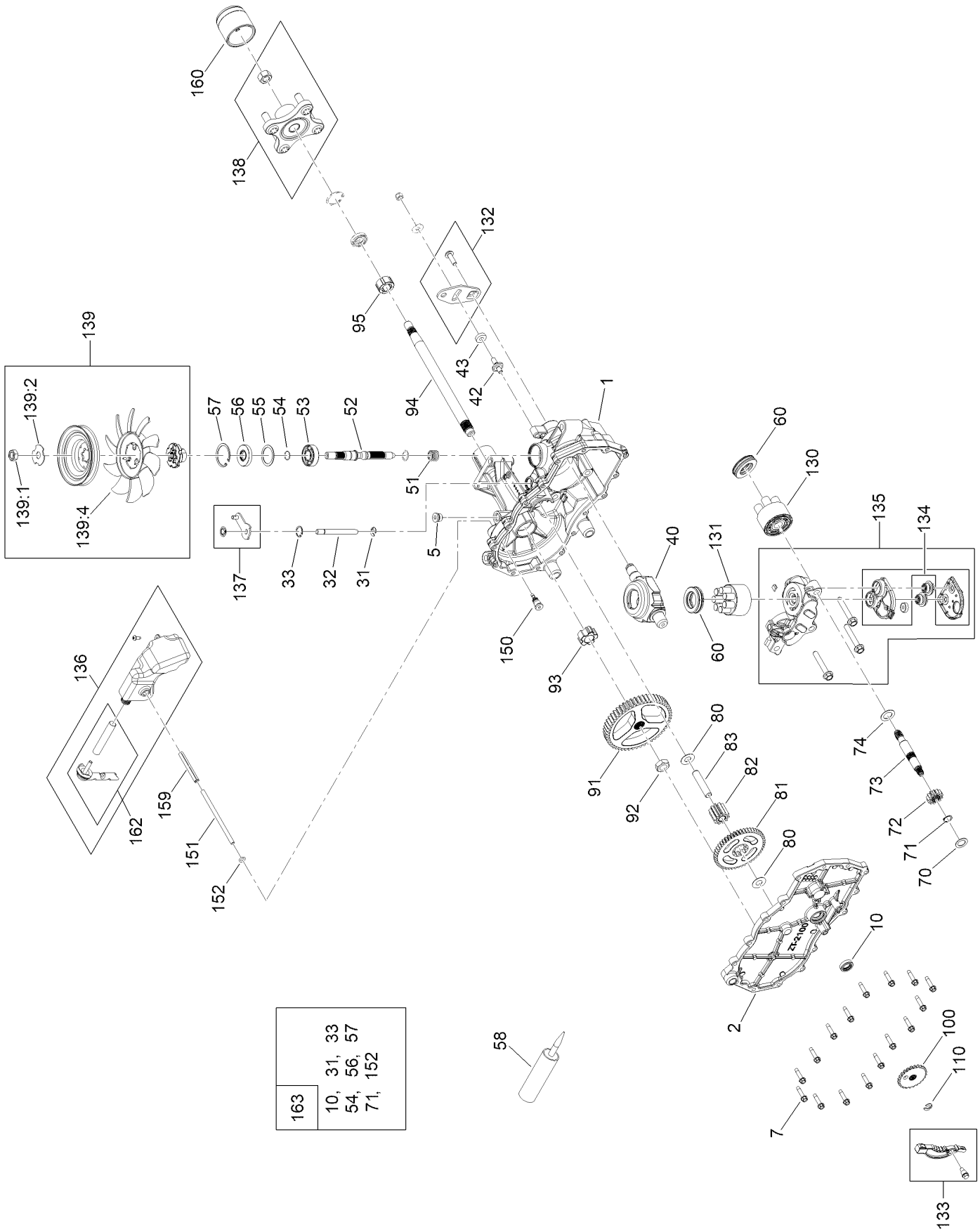

RH Hydro Transmission Assembly No. 139-7451 (continued)

Ref.	Part Number	Qty.	Description
1	120-5531	1	Main Housing ASM
2	120-5533	1	Housing Side Kit
5	104-2189	1	Plug-Thread, Straight
7	117-5359	16	Screw-HHF
10	104-2147	1	Sealant, Silicone - Non-Flammable ●
31	106-8677	2	Ring-Retaining, External
32	106-8678	1	Rod-Bypass
33	106-8679	1	Ring-Retaining, Internal
40	104-5304	1	Swashplate-Trunnion
42	104-2116	1	Stud
43	112-9853	1	Puck-Friction
51	133-1793	1	Spring-Block
51	120-5538	1	Washer
52	104-5306	1	Shaft-Input
53	104-5311	1	Bearing-Ball
54	104-5307	1	Ring-Retaining
55	104-5308	1	Spacer
56	104-5310	1	Seal-Lip
57	104-5309	1	Ring-Retaining
58	104-2147	1	Sealant, Silicone - Non-Flammable
60	94-6922	2	Bearing-Thrust
70	104-5339	1	Washer-Flat
71	104-5340	1	Ring-Retaining
72	104-5316	1	Gear-Pinnion, 13T
73	106-8683	1	Shaft-Motor
74	104-5360	1	Washer
80	94-1933	1	Washer
81	104-5317	1	Gear-10T/48T
82	104-5318	1	Gear-Jackshaft, 10T
83	104-5329	1	Pin-Jackshaft
91	120-5539	1	Gear-Bull
92	104-2142	1	Nut-HJ
93	115-8314	1	Bushing-Inboard
94	120-5540	1	Shaft-Axle
95	120-5541	1	Bearing-Sleeve
100	106-8694	1	Disc-Brake, Cog
110	106-8677	1	Ring-Retaining, External
130	103-2666	1	Cylinder Block Kit
131	110-8561	1	Pump Block ASM
132	117-5362	1	Control Arm Kit
133	106-8688	1	Brake Arm Kit
134	112-9862	1	Center Section Filter Kit
135	114-1634	1	Filter Kit
136	121-5735	1	LH Expansion Tank Kit
137	107-2489	1	Bypass Arm Kit
138	121-5731	1	Hub Kit
139	135-7349	1	Fan And Pulley Kit
139:1	116-9714	1	Nut-HJ
139:2	116-9708	1	Washer-Slotted
139:4	135-7364	1	Fan 7.0 X 10 Blade
150	104-5349	1	Fitting-SAE
151	115-8302	1	Hose
152	104-5361	1	O-Ring
159	121-5728	1	Case-Tube
160	125-0041	1	Cap-Axle
162	139-3278	1	Breather ASM Kit
163	120-7103	1	Seal And Ring Kit

● Not illustrated

Brake Assembly

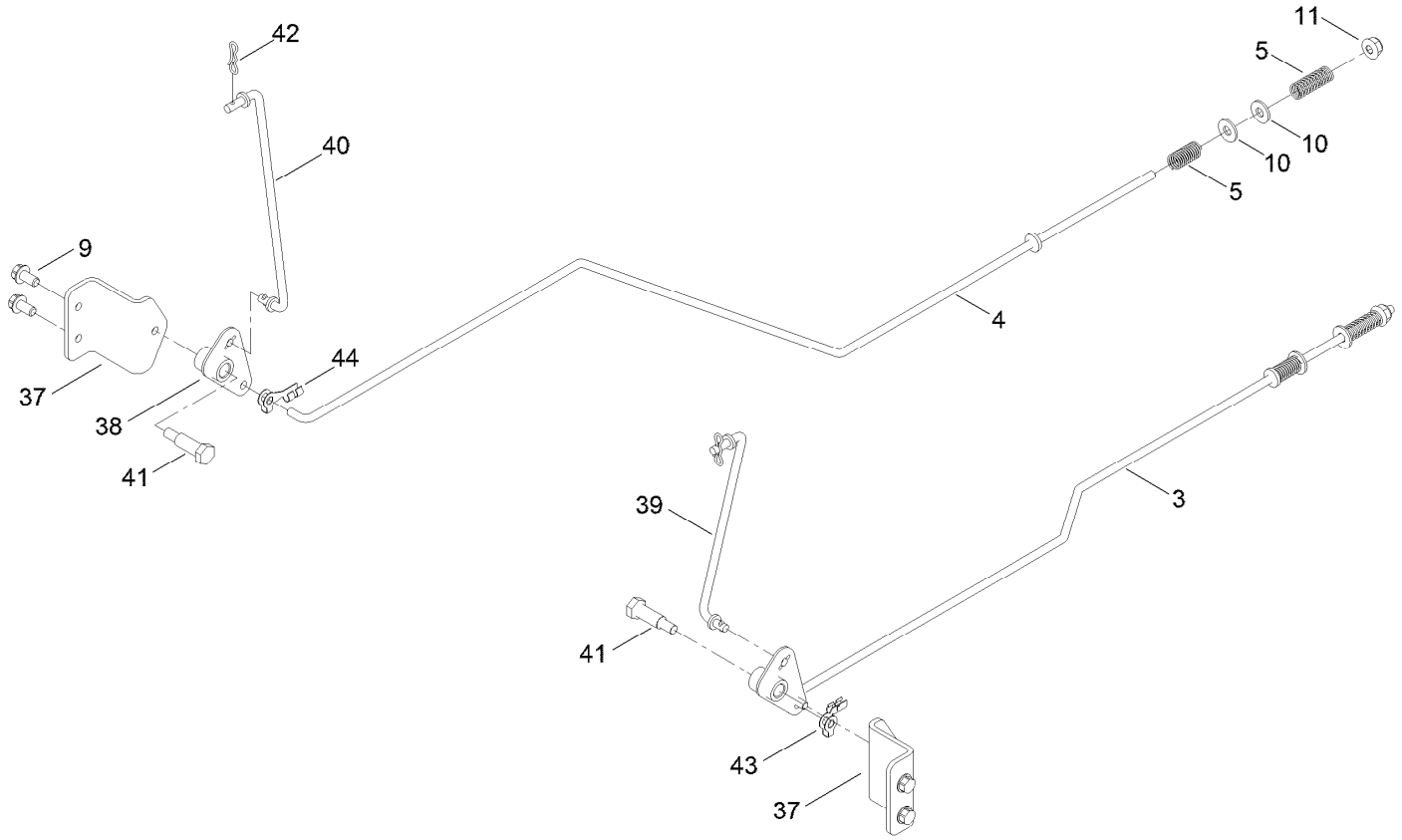

Brake Assembly (continued)

Ref.	Part Number	Qty.	Description
3	161-6561	1	Rod-Brake, LH
4	161-6562	1	Rod-Brake, RH
5	117-1169	4	Spring-Compression
9	32144-4	4	Screw-HWH
10	119-8952	4	Washer-Spcl
11	119-4040	2	Nut-HF, NI
37	163-6018	2	Mount-Bellcrank, Brake

Ref.	Part Number	Qty.	Description
38	161-6420	2	Bellcrank
39	161-6563	1	Link-Brake, LH
40	161-6564	1	Link-Brake, RH
41	145-6364	2	Bolt-Shoulder
42	119-1414	2	Pin-Cotter, Locking
43	144-1816	1	Clip-Rod, LH (7L, 1/4In)
44	144-1815	1	Clip-Rod, RH (7R, 1/4In)

Rear Tire Assembly

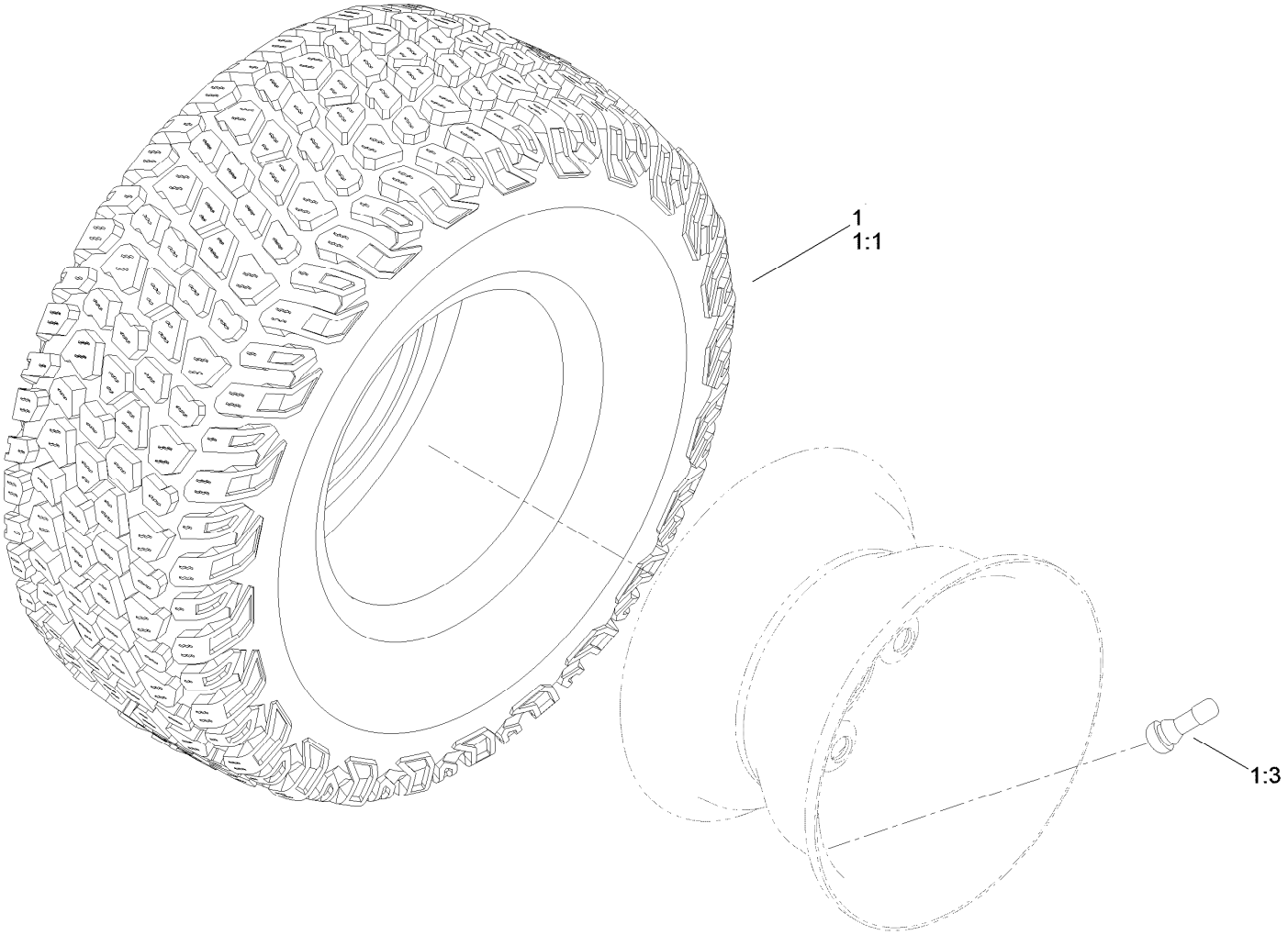

Rear Tire Assembly (continued)

Ref.	Part Number	Qty.	Description
1	163-7987	2	Tire ASM
1:1	163-7988	1	Tire
1:3	232-27	1	Stem-Valve

Seat Pan Assembly

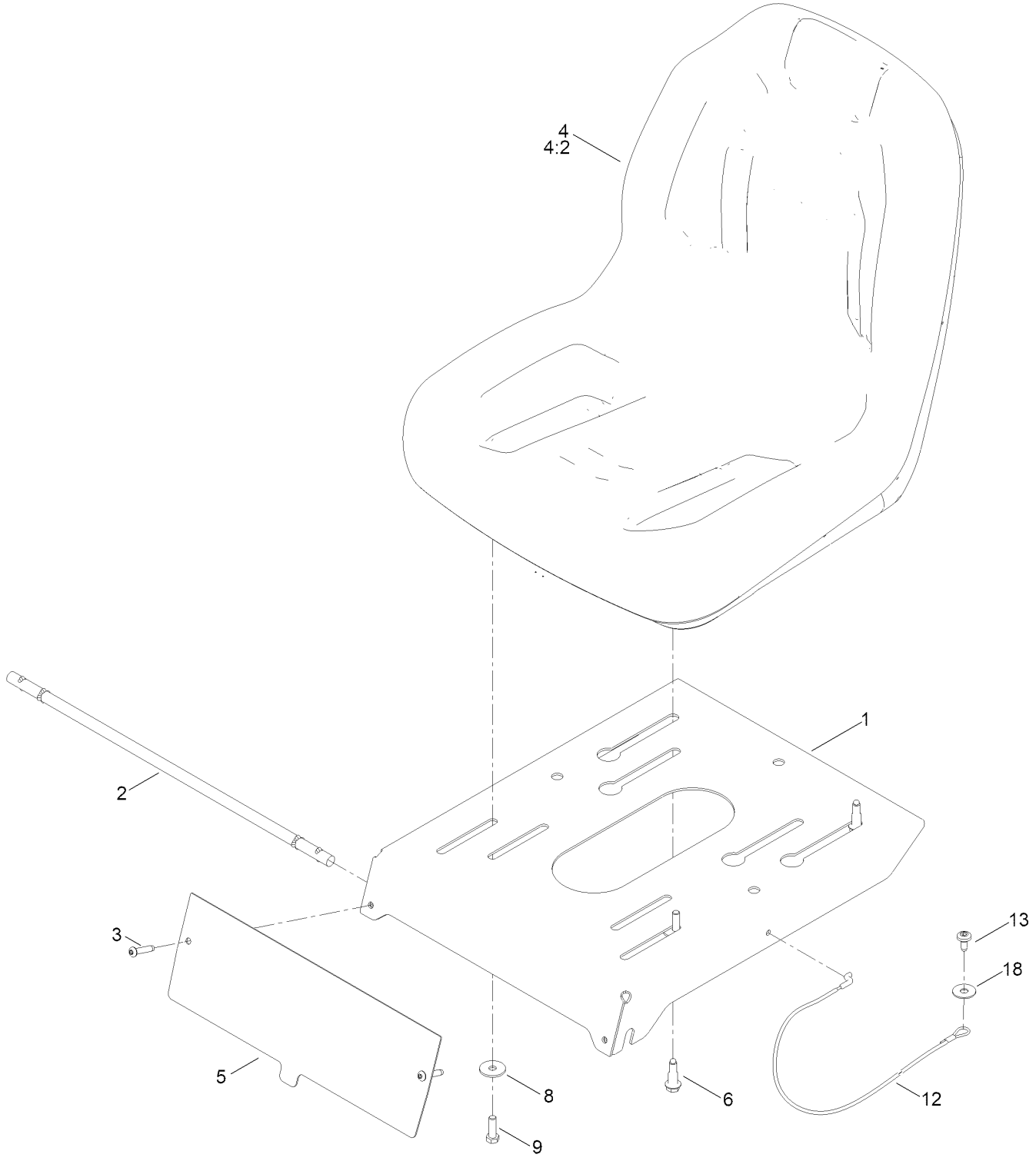

Seat Pan Assembly (continued)

Ref.	Part Number	Qty.	Description
1	138-9781-05	1	Pan-Seat
2	138-7555	1	Rod-Pivot
3	137-3010	2	Screw-BHCS
4	164-0274	1	Seat ASM
4:2	82-2190	1	Switch-Bail
5	164-0299-05	1	Plate-Kick
6	132-4607	2	Bolt-Shoulder, Flange
8	5-4460	2	Washer-Pivot
9	139-1716	2	Screw-HH
12	139-2398	1	Cable-Lanyard
13	120-7950	1	Screw-Torx
18	147-5287	1	Washer-Flat

Motion Control Assembly

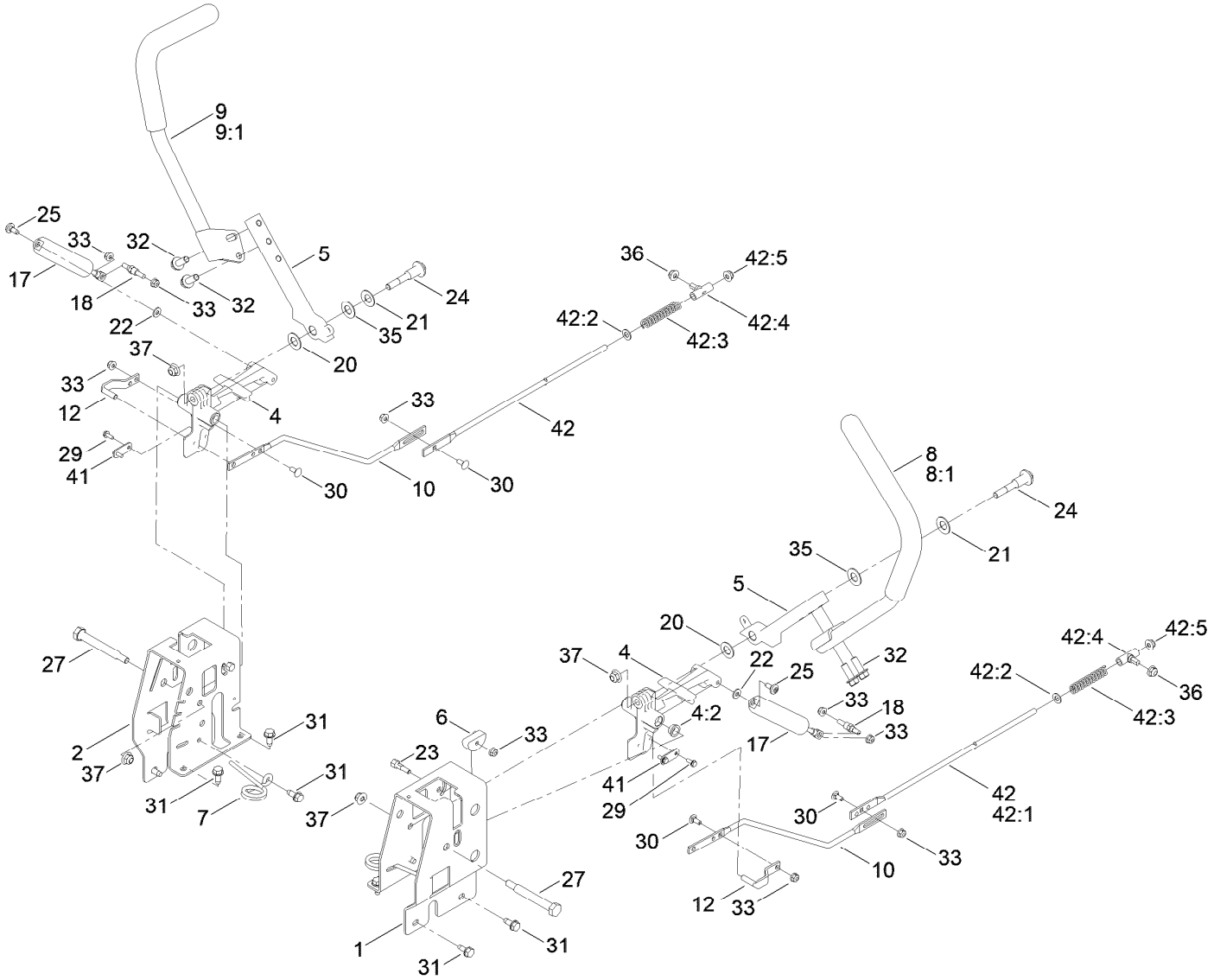

Motion Control Assembly (continued)

Ref.	Part Number	Qty.	Description
1	163-6075-03	1	Plate-Control Box, LH
2	163-6076-03	1	Plate-Control Box, RH
4	119-3470	2	Actuator Arm ASM
4:2	256-156	2	Bushing-Flange
5	163-3142-05	2	Arm-Control
6	139-5803	2	Eccentric
7	138-7539	2	Spring-Torsion
8	133-7055	1	Handle-Control, LH
8:1	121-0726	1	Grip
9	133-7057	1	Handle-Control, RH
9:1	121-0726	1	Grip
10	138-2580	2	Rod-Hydro, Front
12	121-1753	2	Pin-Rod, Hydro
17	132-6853	2	Damper-Non Cavitating
18	138-7215	2	Stud-Damper
20	120-2273	2	Washer-Flat
21	119-8925	2	Washer-Belleville
22	119-8952	2	Washer-Spcl
23	139-5811	2	Bolt-Pivot, Eccentric

Ref.	Part Number	Qty.	Description
24	139-2556	2	Bolt-Pivot
25	120-7950	2	Screw-Torx
27	115-5099	2	Bolt-Pivot
29	139-1713	4	Screw-Thd Roll
30	100-1445	4	Bolt-CARR
31	32144-70	10	Screw-HWHTF
32	139-2597	4	Screw-HHF
33	119-4040	10	Nut-HF, NI
35	117-1240	2	Washer
36	119-4041	2	Nut-HF
37	119-4042	4	Nut-HF, NI
41	164-3321	2	Plate-Stop, Hydro
42	145-0413	2	Rod Hydro ASM
42:1	144-1818	1	Rod-Hydro, Rear
42:2	120-9683	1	Washer-Plain
42:3	138-7252	1	Spring-Compression
42:4	138-7218	1	Mount-Rod, Hydro
42:5	119-4041	1	Nut-HF

Engine and Muffler Assembly

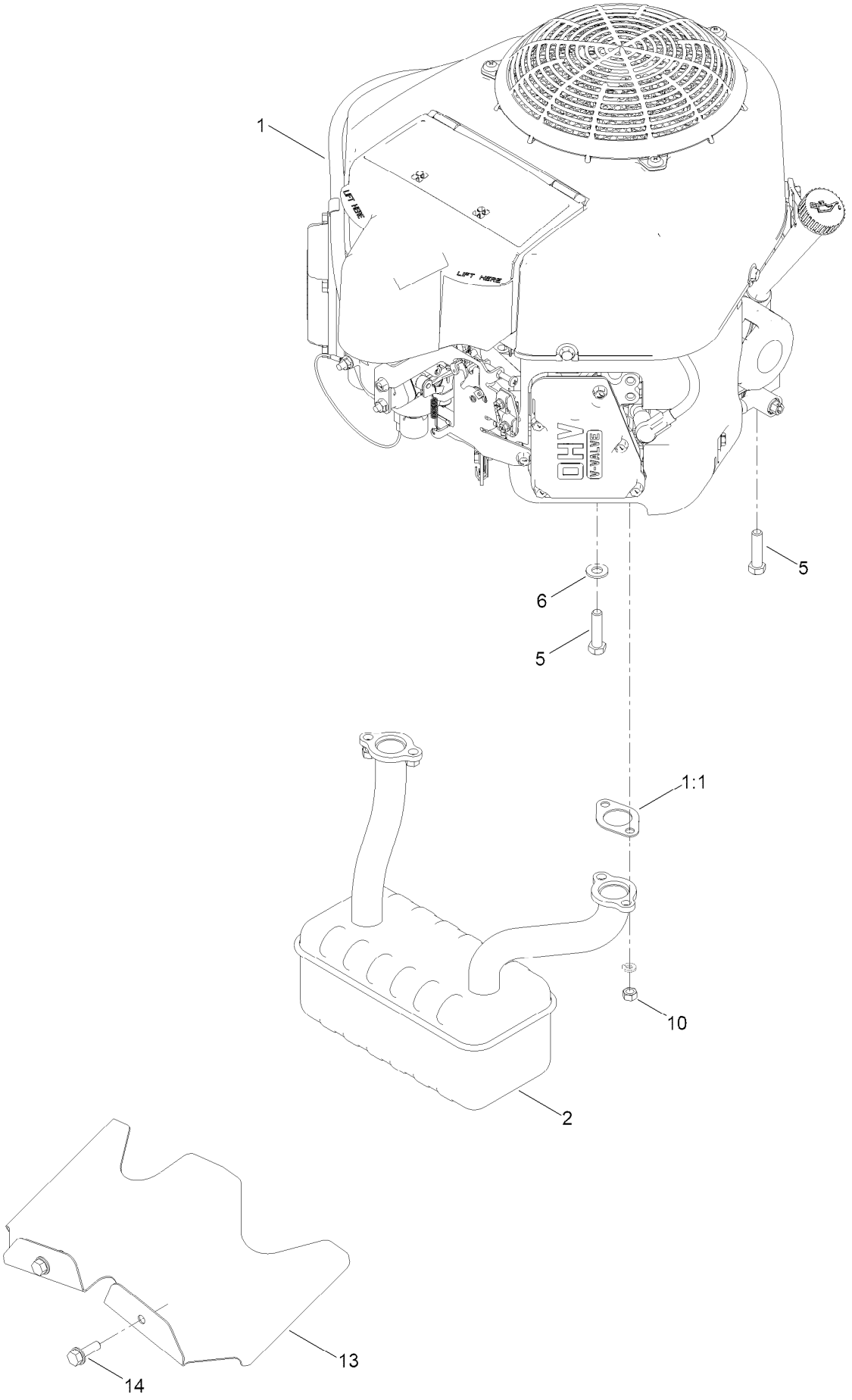

Engine and Muffler Assembly (continued)

Ref.	Part Number	Qty.	Description
1		1	Engine-B&s Exi ■▲
1:1	147-5158	2	Gasket-Exhaust, Briggs Twin ●
2	145-6318	1	Muffler
5	139-2576	4	Screw-HWH
6	115-1166	3	Washer-Plain
10	33004-00	4	Nut-HF
13	147-5195-03	1	Shield-Heat
14	32144-70	2	Screw-HWHTF

● Not illustrated
▲ Obtain parts from www.briggsandstratton.com

■ Not serviced separately

Fuel System Assembly

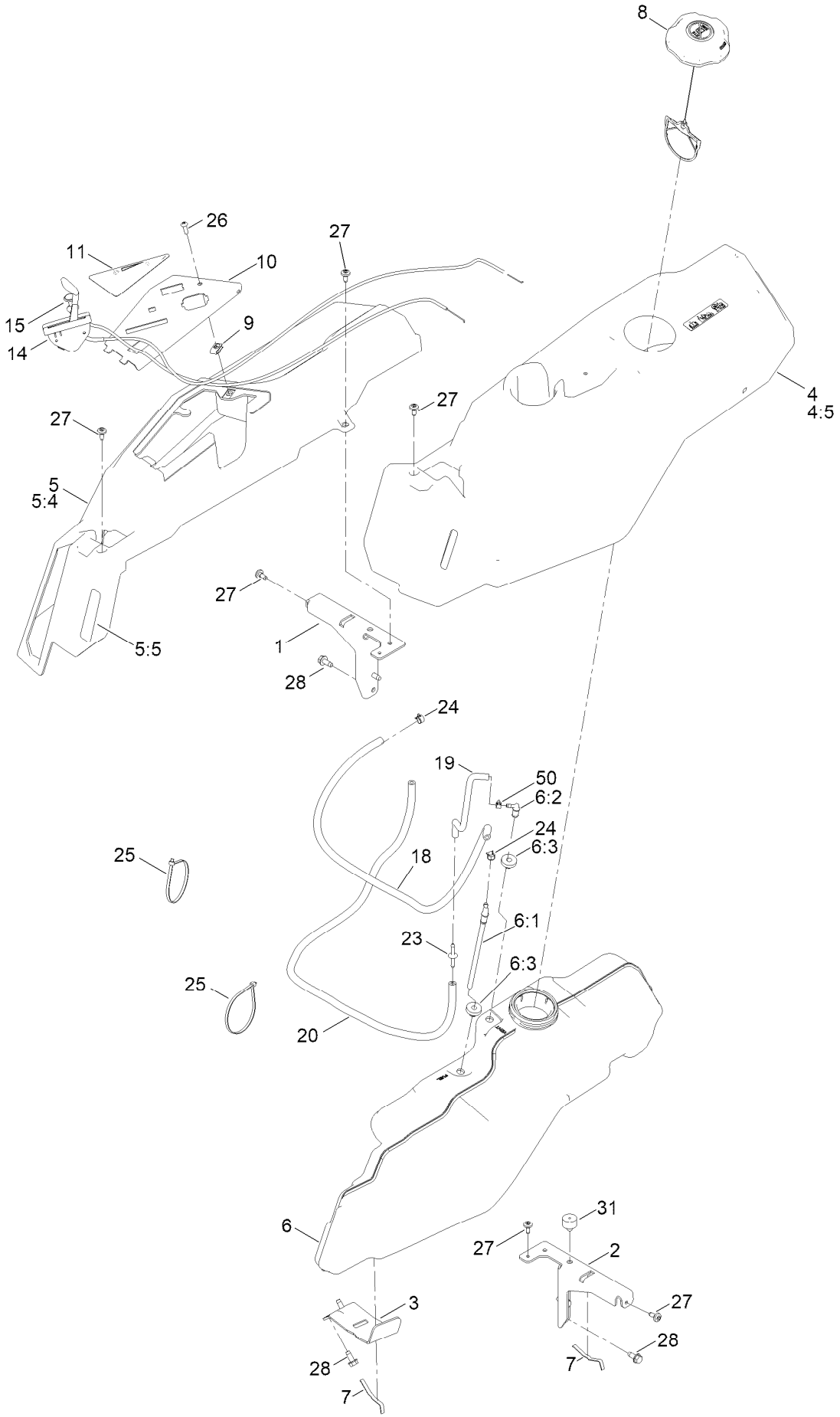

Fuel System Assembly (continued)

Ref.	Part Number	Qty.	Description
1	138-6070-03	1	Support-Pod, RH
2	138-6071-03	1	Support-Pod, LH
3	139-3271-03	1	Support-Tank, Fuel
4	138-6074	1	Pod-LH
4:5	139-2395	1	Decal-Control Lever, LH
5	164-3340	1	Pod-RH
5:4	139-2394	1	Decal-Control Lever, RH
5:5	147-7691	1	Plug-Sc
6	144-5304	1	Tank-Fuel ASM
6:1	139-1091	1	Connector-Elbow, 90 DEG
6:2	144-5302	1	Fitting-Elbow 90
6:3	46-6560	2	Bushing
7	609830	2	Spring
8	137-4119	1	Cap-Fuel, Ratcheting
9	107069	1	Clip

Ref.	Part Number	Qty.	Description
10	139-2380-03	1	Panel - Control
11	139-2391	1	Decal-Panel, Control
14	147-7698	1	Cable-Throttle
15	139-2402	1	Cable-Choke
18	109-0307	1	Hose-Fuel
19	136-6345	1	Hose-Fuel
20	110-3958	1	Hose-Fuel
23	144-1983	1	Adapter Orifice
24	2412-98	2	Clamp-Hose
25	3290-379	2	Tie-Cable
26	3258-166	1	Screw-PRH
27	120-7950	6	Screw-Torx
28	32144-70	6	Screw-HWHTF
31	120-7893	1	Bumper-Grommet
50	2412-80	1	Clamp-Hose

Electrical Assembly

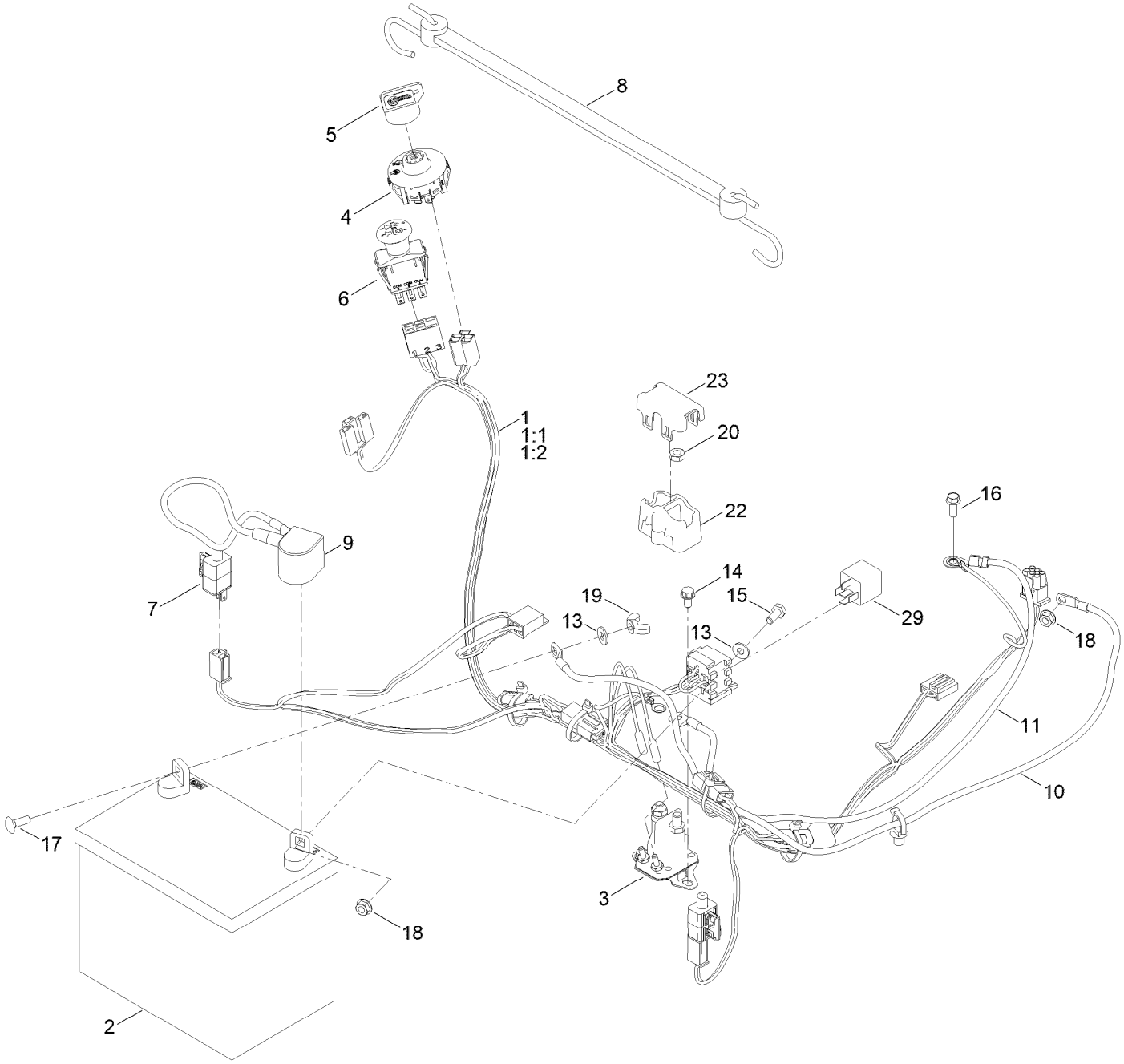

Electrical Assembly (continued)

Ref.	Part Number	Qty.	Description
1	161-6631	1	Harness-Wire, Main
1:1	109355	1	Fuse-Blade, 15 Amp
1:2	109102	1	Fuse-Blade, 25 Amp
2	105-1692	1	Battery- Dry, 12V, 230 CCA
3	117-1197	1	Solenoid
4	137-4100	1	Switch-Ignition
5	63-8360	1	Key-Ignition
6	103-5221	1	Switch-PTO
7	110-6765	2	Switch
8	139-2381	1	Strap-Rubber
9	140-2713	1	Cable-Battery, Pos
10	139-2431	1	Cable-Battery, Red (8 Gauge)
11	121-5726	1	Cable-Battery, Black
13	120-9679	2	Washer-Flat
14	32144-4	2	Screw-HWH
15	137-3041	1	Screw-HH
16	32144-85	1	Screw-HWH Thd Form
17	137-3053	1	Screw-CARR
18	139-2575	2	Nut-HF
19	32103-22	1	Nut-Wing
20	139-2580	2	Nut-HJ
22	140-2080	1	Cover-Solenoid
23	140-2081	1	Cap-Solenoid
29	1-643275	1	Relay

Deck and Decal Assembly

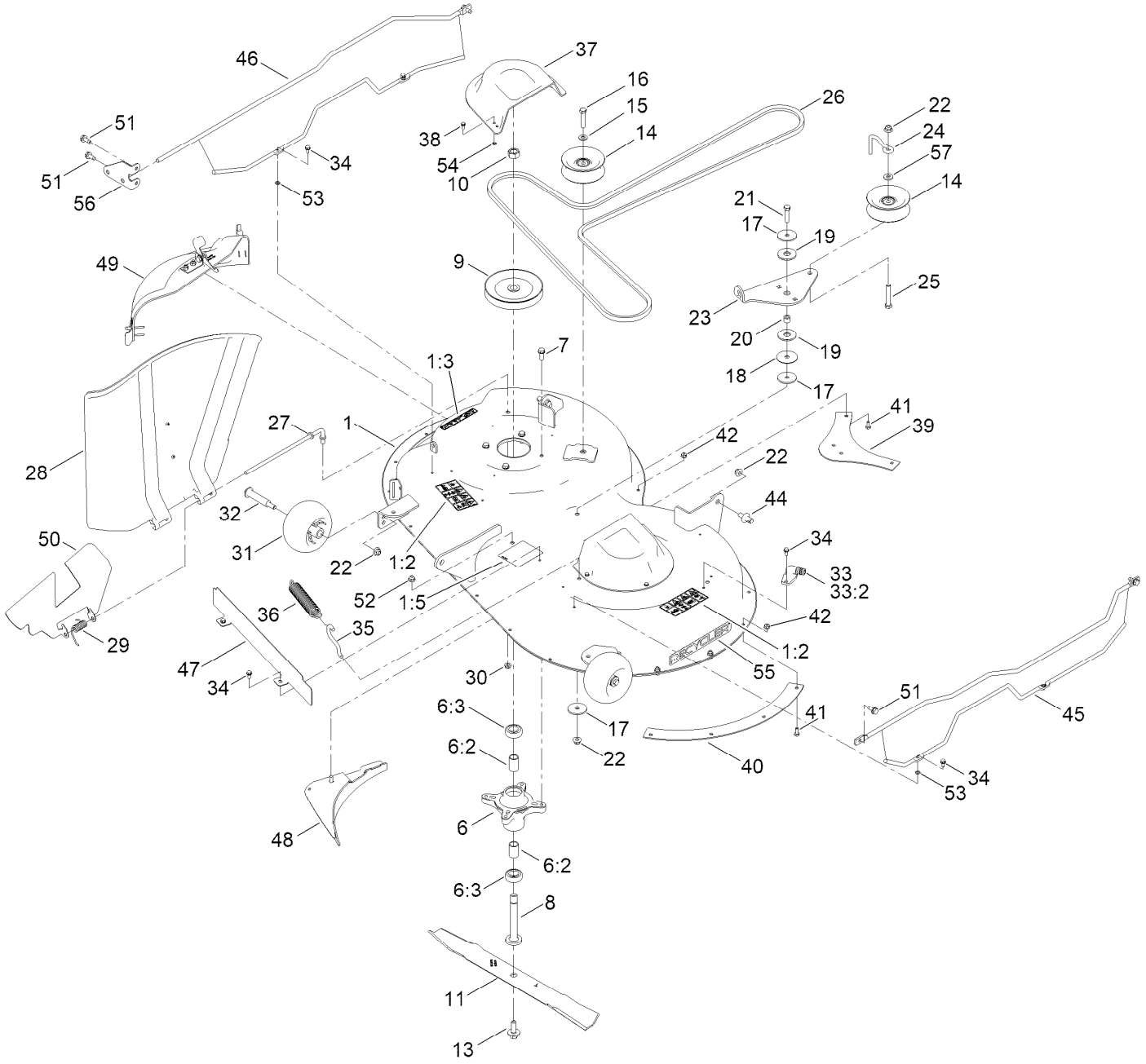

Deck and Decal Assembly (continued)

Ref.	Part Number	Qty.	Description
1	138-9761	1	42 Inch Deck And Decal ASM
1:2	132-0872	2	Decal-Danger, Deck
1:3	130-0731	1	Decal-Danger
1:5	105-7015	1	Decal-Routing, Belt
6	139-3214	2	Spindle ASM
6:2	120-7935	2	Spacer
6:3	138-9770	2	Bearing-Ball
7	32144-41	8	Screw-Taptite
8	117-7268	2	Shaft-Spindle
9	139-2433	2	Pulley
10	139-2578	2	Nut-Hex
11	117-5376-03	2	Blade-Mulch
13	145-0411	2	Bolt-Blade, Sems
14	132-9420	2	Pulley-Idler, Flat
15	115-1166	1	Washer-Plain
16	138-0722	1	Screw-HH
17	139-1726	3	Washer-Rebound
18	120-2229	1	Washer
19	114-0463	2	Washer-Friction, Composite
20	115-4986	1	Spacer
21	137-3070	1	Screw-HH
22	119-4042	6	Nut-HF, NI
23	138-7262	1	Arm-Idler (Mty/Wdm)
24	138-7270	1	Guide-Belt, Idler
25	139-2589	1	Screw-HH
26	119-8819	1	V-Belt
27	137-2019	1	Rod-Pivot
28	137-7046	1	Deflector
29	138-7268	1	Spring-Torsion
30	121-4600	1	Nut-Hex ●
31	1-603299	2	Roller-Scalp, Anti
32	139-2551	2	Bolt-Shoulder
33	133-9289	1	Fitting-Washout
33:2	133-9290	1	O-Ring
34	32144-4	8	Screw-HWH
35	138-7267	1	Hook-Spring, Return
36	138-7265	1	Spring Extension
37	108-7889	2	Cover-Belt
38	139-1713	6	Screw-Thd Roll
39	137-2036-03	1	Baffle-Blowout, Rear
40	137-2037-03	1	Baffle-Blowout, Side
41	137-3041	8	Screw-HH
42	119-4040	8	Nut-HF, NI
44	139-5871	2	Pin-Deck
45	161-6251	1	Left Guard ASM
46	161-6252	1	Right Guard ASM
47	164-3393-03	1	Shield-Front [black]
48	137-7034-03	1	Baffle-Clipping
49	137-5034	1	42 Inch Mulch Plug ASM
50	138-2555-03	1	Deflector Insert
51	32144-70	5	Screw-HWHTF
52	119-4041	1	Nut-HF
53	1-803037	4	Nut-Retaining
54	132-0900	6	Nut-Retaining
55	140-4184	1	Decal
56	140-5183-01	1	Plate-Mount, Guard
57	138-7207	1	Spacer-Hub, Blower

● Not illustrated

42 Inch Mulch Plug Assembly No. 137-5034

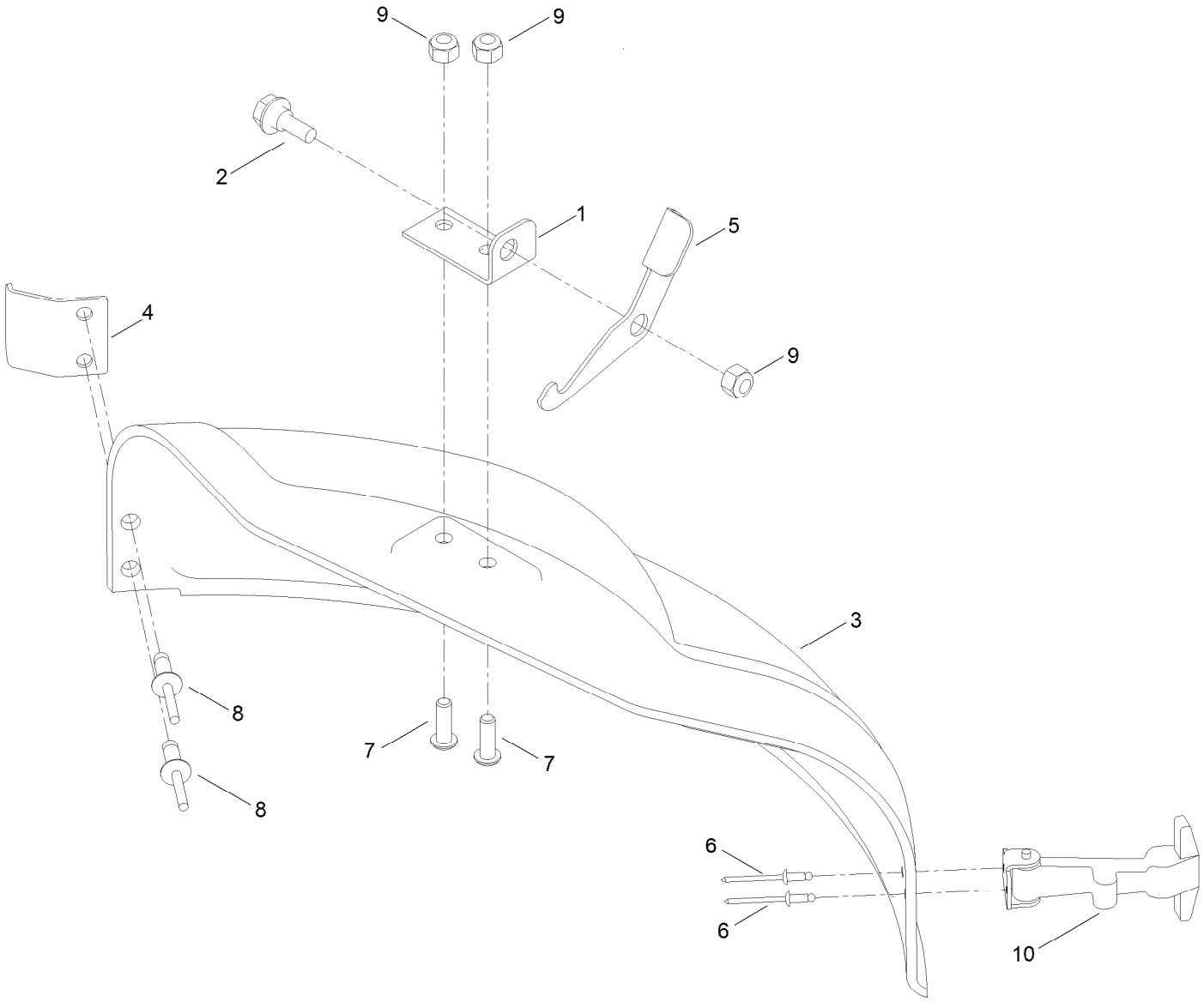

42 Inch Mulch Plug Assembly No. 137-5034 (continued)

Ref.	Part Number	Qty.	Description
1	138-7271	1	Plate-Pivot
2	139-1730	1	Screw-Shoulder, HHF
3	137-2009	1	Plug-Mulch, 42 Inch
4	137-2023	1	Bracket-Elbow
5	140-3497	1	Latch
6	3269-31	2	Rivet-Pop
7	3274-69	2	Screw-HSBH
8	3290-412	2	Rivet-Blind
9	137-3088	3	Nut-Hex
10	117344	1	Handle ASM

Model Specific Assembly

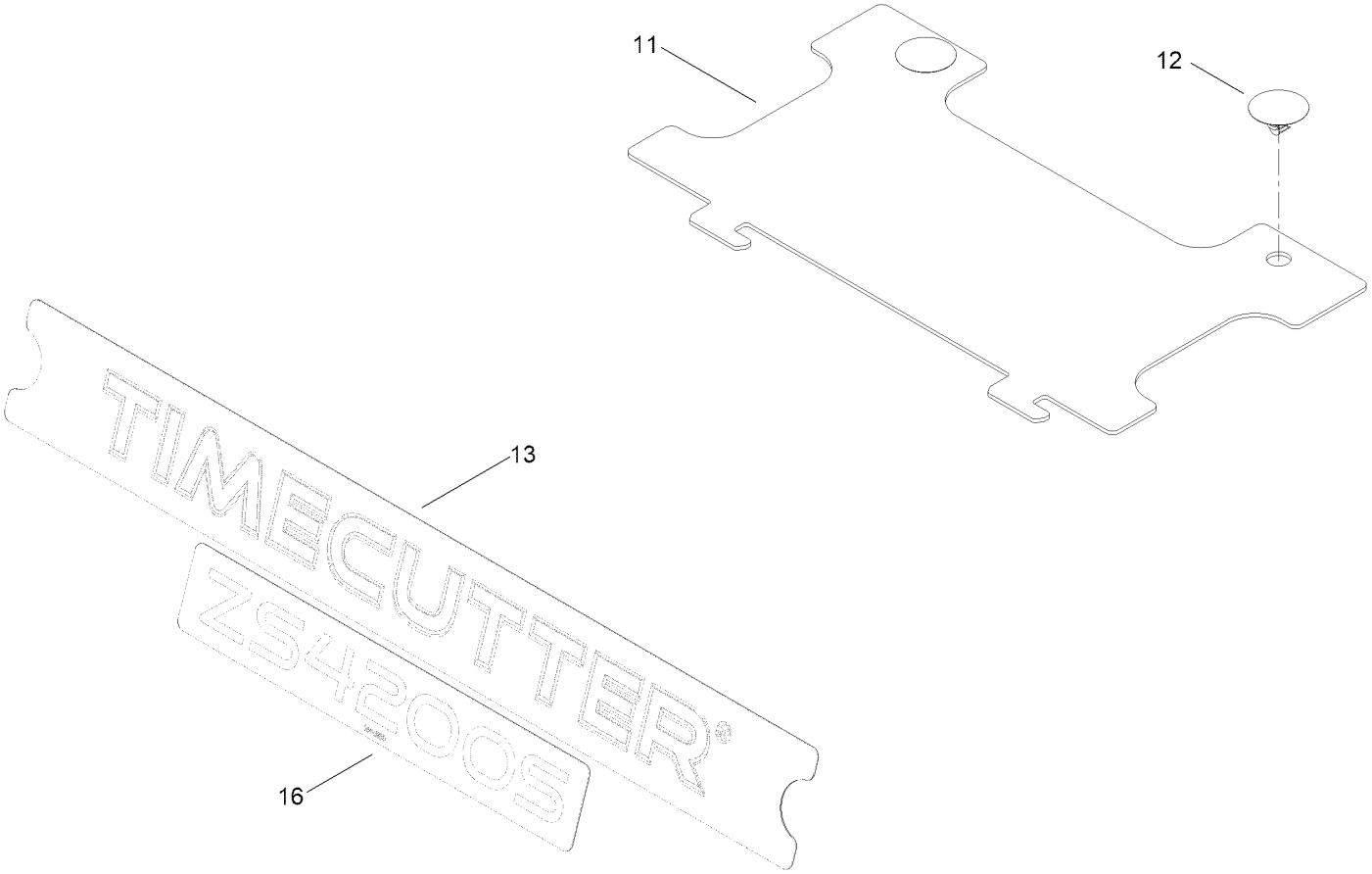

Model Specific Assembly (continued)

Ref.	Part Number	Qty.	Description
11	140-0355	1	Shield
12	139-3205	2	Rivet-Pa66

Ref.	Part Number	Qty.	Description
13	164-3326	1	Decal-Timecutter
16	164-3350	1	Decal-Zs4200S

Clutch Assembly

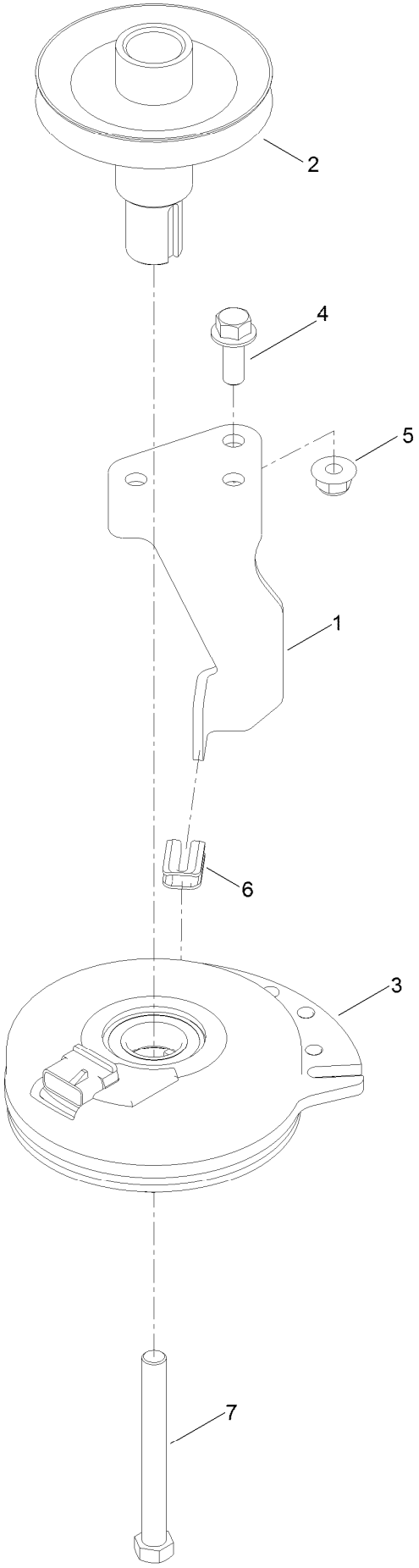

Clutch Assembly (continued)

Ref.	Part Number	Qty.	Description
1	138-7275	1	Stop-Clutch (Narrow)
2	138-9792	1	Pulley-Engine
3	117-7468	1	Clutch-Electric
4	139-2597	1	Screw-HHF
5	119-4042	1	Nut-HF, NI
6	120-2217	1	Isolator-Clutch
7	139-2571	1	Screw-HH

Attachments and Accessories

For 75781 — TimeCutter ZS4200T Zero Turn Riding Mower

Product Name	Model/Part
Jack Kit	127-6666
Fuel Stabilizer .05 oz	130-2393
4-Cycle Fuel, Snow And Lawn 32oz Can	131-3823
Toro Premium Fuel Treatment 12oz Bottle	131-6572
Replacement Blade Kit	137-1999-03P
42in Recycler Kit	137-7042
Bagging Enhancement Kit	137-7048
Sunshade Kit	140-2054
Deluxe Seat Kit	140-2057
Jack Mount Kit	140-2711
Striping Kit, 42in and Riding Mowers	140-5198
Hour Meter Kit	147-8791
Deck Footlift Assist Kit	161-4527
Caster Wheel Kit	161-4530
Kit-Arm Rest	164-3347
LED Light Kit	164-5848
Assist Bar Kit	164-5870
Front Weight Kit	164-6928
10W30 4-Cycle Engine Oil (32oz Bottle)	38280
Toro 4-Cycle SAE 30 Oil (32oz Bottle)	38903
Storage Cover	490-7516
Mower Deck Drive Belt, TimeCutter SS Riding Mower with 42-inch Mowing Deck	79004
42in Stamped Twin Bagger	79419
ROPS KIT, TC G7, CE	79492
Slope Sensor Kit, Consumer Riding Mow	79493

Notes:

TORO®

Count on it.