Form No. 3474-137 Rev B

TORO®

Count on it.

Parts Catalog

Turf Pro™ 500S

Robotic Mower

Model No. 30922ANZ—Serial No. 325000000 and Up

Register at www.Toro.com.
Original Instructions (EN)

3474-137 B

Ordering Replacement Parts

To order replacement parts, please supply the part number, the quantity, and the description of each part desired.

Understanding Reference Numbers

Each identified part in an illustration has a reference number. The reference number for a part also appears in the parts list, along with other information about the part.

This catalog uses two special reference number formats, one to indicate parts in a service assembly and another to indicate the quantity of a given part in an illustration.

Service Assembly Reference Numbers

Parts in service assemblies have reference numbers in the form a:b. The a represents the reference number of the entire service assembly and the b represents a sequential number unique to each part within the service assembly.

For example, a wheel assembly might be identified by reference number 6, the tire by 6:1, the valve by 6:2, and the wheel by 6:3. When you order the assembly identified by reference number 6, you receive all parts identified by reference numbers 6:1,6:2, and 6:3. However, you may also order any part individually. Reference numbers of this type appear in illustration and in parts lists.

Reference Numbers Indicating Quantity

In an illustration, if a reference number indicates more than one part, the reference number has the form nX y. The n represents the quantity of the part, the X is the multiplication symbol, and the y represents the reference number.

For example, in an illustration, the reference number 2X 37 means that two of the parts identified by reference number 37 are indicated.

Contents

Body Assembly 4
Charging Housing Assembly 6
Main Frame Assembly 8
Cutting Height Assembly 10
Electrical and Battery Box Assembly 12
Frame Support Assembly 14
Lift Sensors Assembly 16
Wheels and Drive Motor Assembly 18
Cutting Heads Assembly 20
Cutting Disc Assembly No. 163-5579 22
Electrical Parts Assembly 24
Attachments and Accessories 26

© 2026—The Toro® Company
8111 Lyndale Avenue South
Bloomington, MN 55420

Contact us at www.Toro.com.
Printed in the USA.
All Rights Reserved

Body Assembly

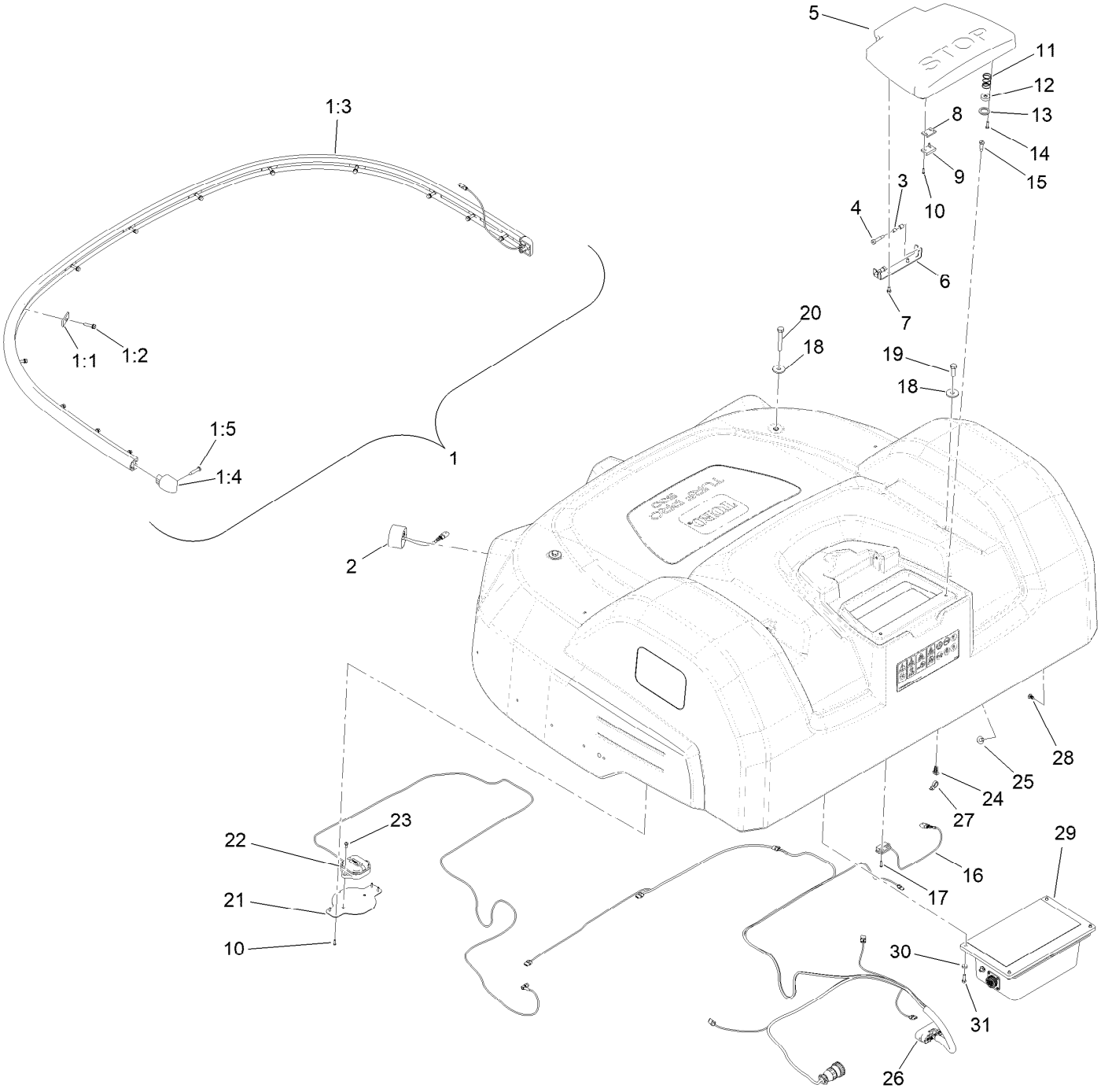

Body Assembly (continued)

Ref.	Part Number	Qty.	Description
1	164-0086	1	Bumper Kit
1:1	163-5375	13	Plate-Nut
1:2	163-5374	13	Screw-HWH, Sems
1:3	164-0088	1	Bumper ASM
1:4	163-5373	2	End Cap, Bumper
1:5	163-5376	2	Screw-Pzph
2	164-0084	5	Sensor-Ultrasonic
3	163-5390	4	Spacer
4	163-5389	2	Screw-Shoulder
5	163-5391	1	Button-Stop
6	163-5397	1	Bracket-Hinge, Stop Button
7	163-5382	2	Screw-HH
8	163-5402	1	Spacer-Switch, Reed
9	163-5392	1	Magnet-Bonnet
10	163-5523	6	Screw-Pz, Plastic
11	163-5393	2	Spring-Compression
12	163-5394	2	Magnet
13	163-5395	2	Washer-Lock
14	163-5396	6	Screw-Pzfbh, Plastic
15	163-5388	2	Screw-Shoulder
16	163-5379	1	Harness-Stop Button
17	163-5380	2	Screw-Pzrh, Plastic
18	163-5400	4	Washer-Flat
19	163-5398	2	Screw-HH
20	163-5399	2	Screw-HH
21	163-5557	1	Antenna Support ASM
22	163-5558	1	Antenna-Rtk
23	163-5559	2	Screw-PPH
24	163-5384	39	Mount-Cable Tie
25	163-5385	1	Mount-Cable Tie
26	163-5381	1	Harness-Jae Bodywork
27	3290-378	40	Tie-Cable
28	163-5401	6	Rivet-Push
29	163-5868	1	Smartbox-Anz
30	163-5554	4	Washer-Flat
31	163-5553	4	Screw-HH

Charging Housing Assembly

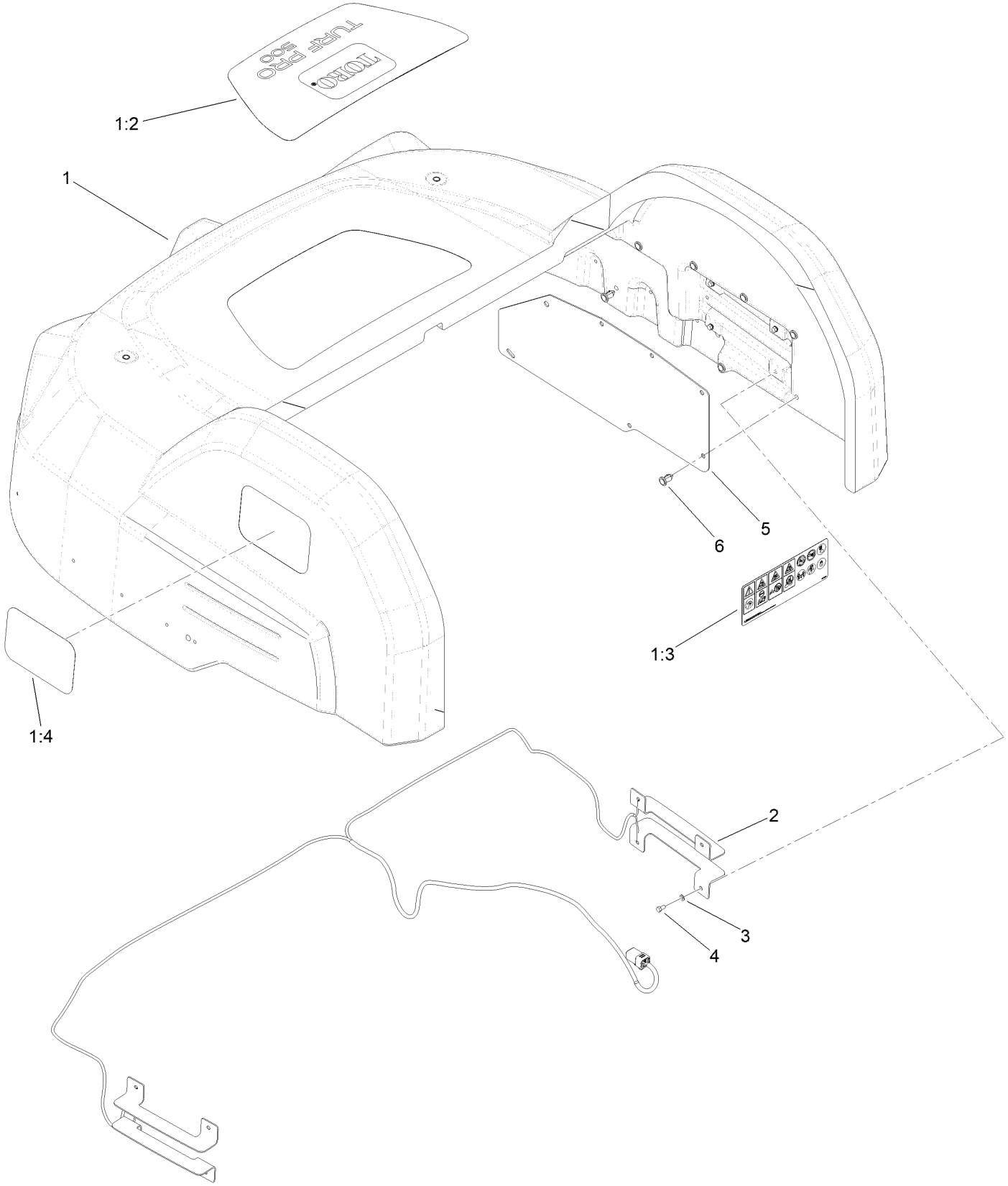

Charging Housing Assembly (continued)

Ref.	Part Number	Qty.	Description
1	163-5354	1	Body Service ASM
1:2	163-3956	1	Decal-Turf Pro 500, Top
1:3	163-3955	1	Decal-Panel
1:4	105-1217	2	Decal
2	163-5561	1	Charge Cable ASM
3	163-5383	8	Washer-Flat
4	163-5382	8	Screw-HH
5	163-5386	2	Plate-Protection, Contacts
6	163-5387	14	Rivet-Push

Main Frame Assembly

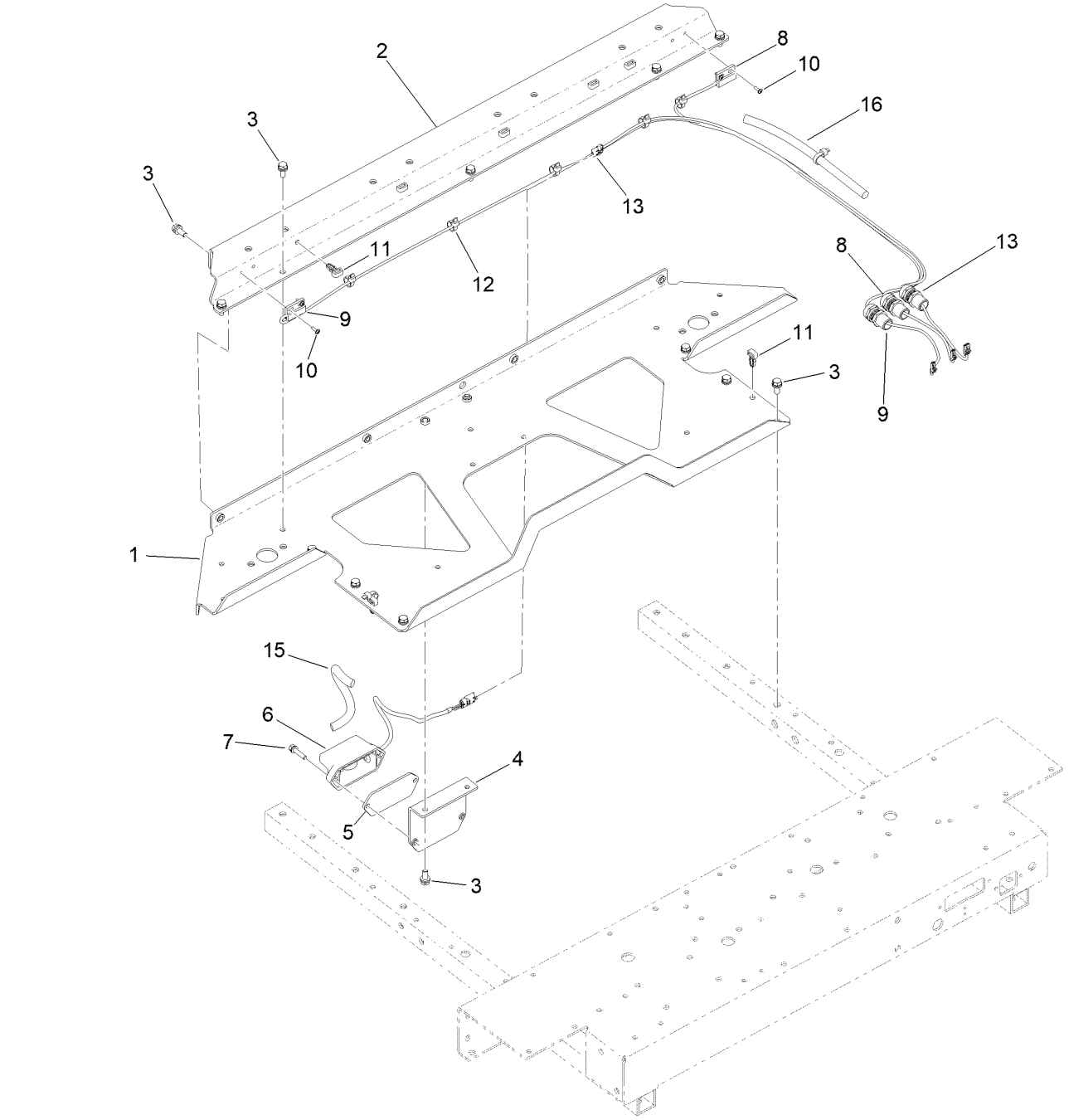

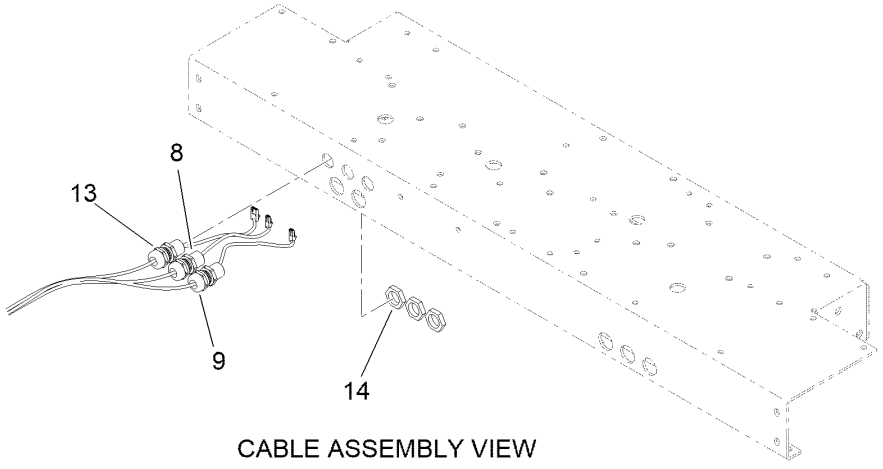

CABLE ASSEMBLY VIEW

Main Frame Assembly (continued)

Ref.	Part Number	Qty.	Description
1	163-5407	1	Front Plate ASM
2	163-5409	1	Front Crossbar ASM
3	163-5408	17	Screw-HWH, Sems
4	163-5455	1	Bracket-Mount, Coil
5	163-5404	1	Foam-Mount, Coil
6	163-5405	1	Coil
7	163-5374	2	Screw-HWH, Sems
8	163-5410	1	Sensor-Proximity,RH Front
9	163-5411	1	Sensor-Proximity,LH Front
10	163-5413	4	Screw-Hsbhf
11	163-5384	8	Mount-Cable Tie
12	3290-378	8	Tie-Cable
13	163-5444	1	Cable-Coil, Central
14	163-5418	3	Nut-Cable, Gland
15	163-5406	1	Loom-Wire, Split
16	163-5412	1	Loom-Wire, Spiral

Cutting Height Assembly

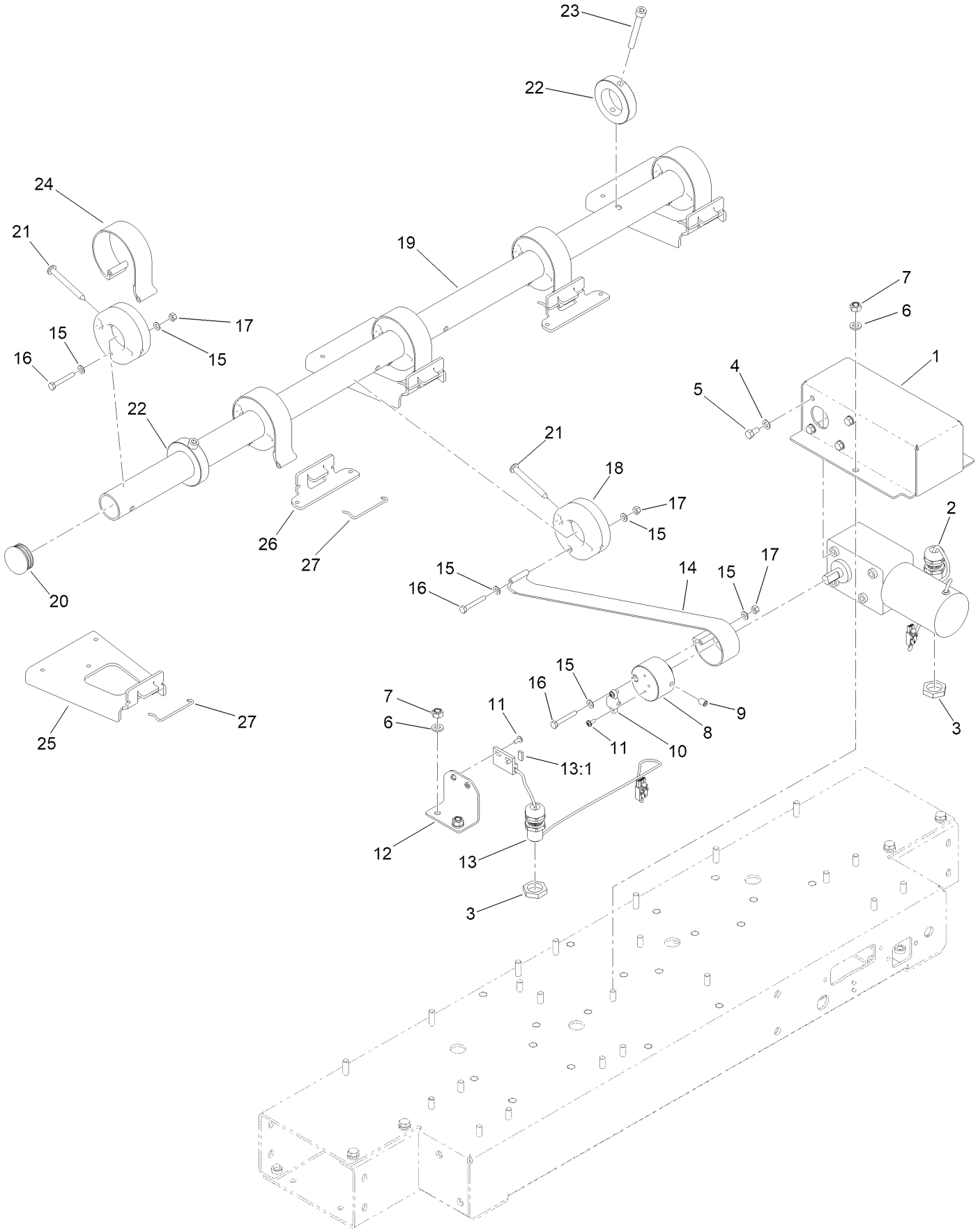

Cutting Height Assembly (continued)

Ref.	Part Number	Qty.	Description
1	163-5415	1	Cover-Motor, Lifting
2	163-5414	1	Motor-Lifting
3	163-5418	2	Nut-Cable, Gland
4	163-5383	4	Washer-Flat
5	163-5382	4	Screw-HH
6	163-5417	5	Washer-Flat
7	163-5416	5	Nut-Hex, NI
8	163-5436	1	Pulley-Drive, Lift
9	163-5438	1	Screw-Set
10	163-5437	1	Mount-Magnet, Sensor
11	163-5421	4	Screw-Hsbhf
12	163-5419	1	Bracket-Mount, Sensor
13	163-5420	1	Sensor-Angular
13:1	164-0091	1	Magnet-Switch
14	163-5431	1	Strap-Nylon, Long
15	163-5433	14	Washer-Flat
16	163-5432	7	Screw-HH
17	163-5434	7	Nut-Hex, NI
18	163-5429	6	Hub-Strap, Lift
19	163-5425	1	Tube-Lift
20	163-5426	2	Plug-Cap, Round
21	163-5435	6	Screw-Pzph
22	163-5427	2	Ring-Thrust
23	163-5428	2	Screw-HSH
24	163-5430	5	Strap-Nylon, Short
25	163-5422	3	Bracket-Strap, Long
26	163-5423	2	Bracket-Strap, Short
27	163-5439	5	Pin-Locking, Strap

Electrical and Battery Box Assembly

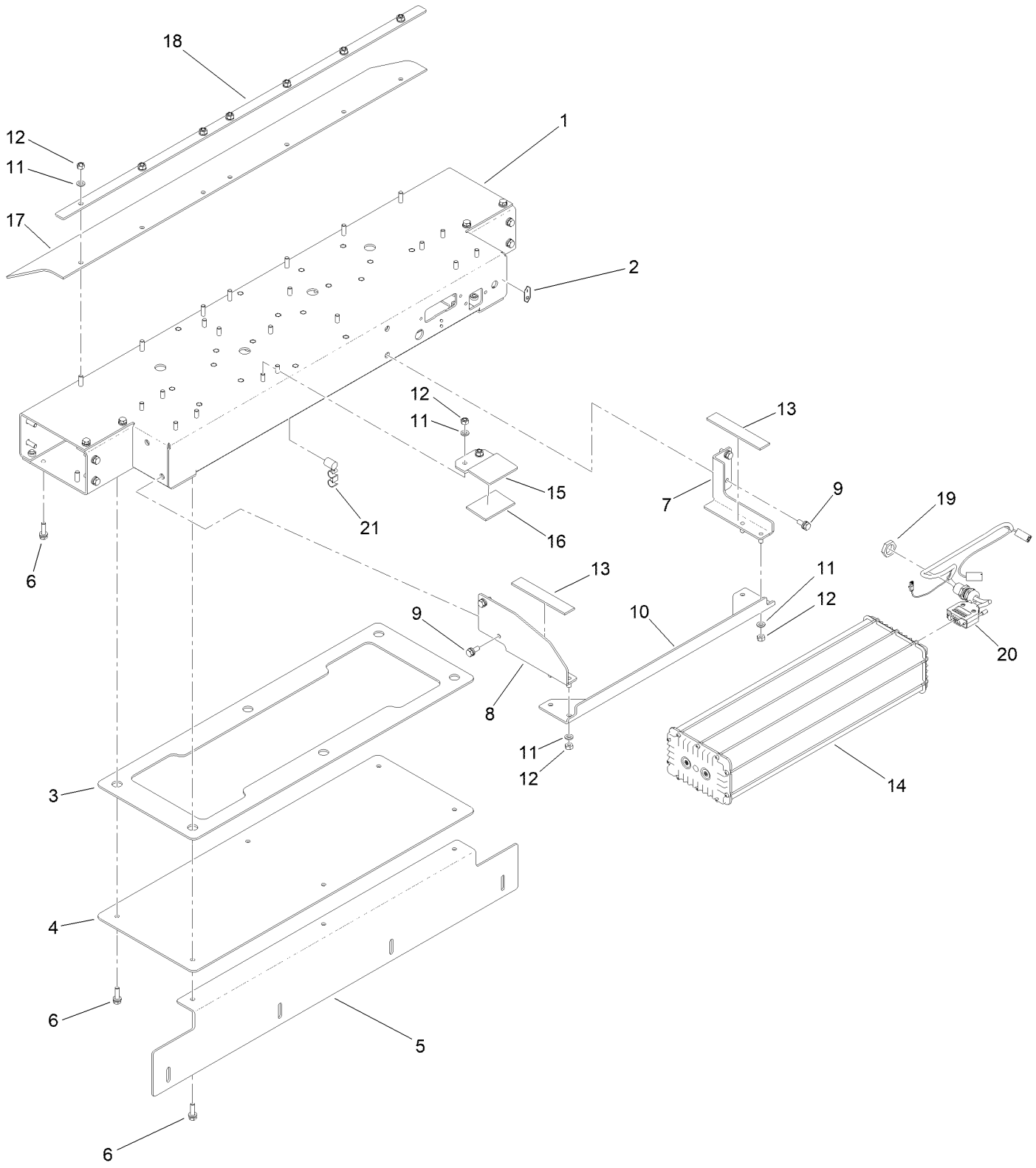

Electrical and Battery Box Assembly (continued)

Ref.	Part Number	Qty.	Description
1	163-5440	1	Electrical Box ASM
2	163-5441	1	Decal-On-Off, Vertical
3	163-5457	1	Seal-Foam, Door
4	163-5456	1	Plate-Door, Electrical Box
5	163-5459	1	Guard-Rear
6	163-5448	18	Screw-HWH, Sems
7	163-5449	1	RH Battery Mount ASM
8	163-5450	1	LH Battery Mount ASM
9	163-5408	4	Screw-HWH, Sems
10	163-5451	1	Crossbar-Mount, Battery
11	163-5417	13	Washer-Flat
12	163-5416	13	Nut-Hex, NI
13	163-5452	2	Pad-Rubber, Battery
14	164-0085	1	Battery
15	163-5460	1	Bracket-Retainer, Battery
16	163-5461	1	Pad-Rubber, Battery
17	163-5453	1	Guard-Rubber
18	163-5454	1	Plate-Guard, Rubber
19	163-5418	1	Nut-Cable, Gland
20	163-5443	1	Cable-Battery
21	163-5447	2	Clip-Cable

Frame Support Assembly

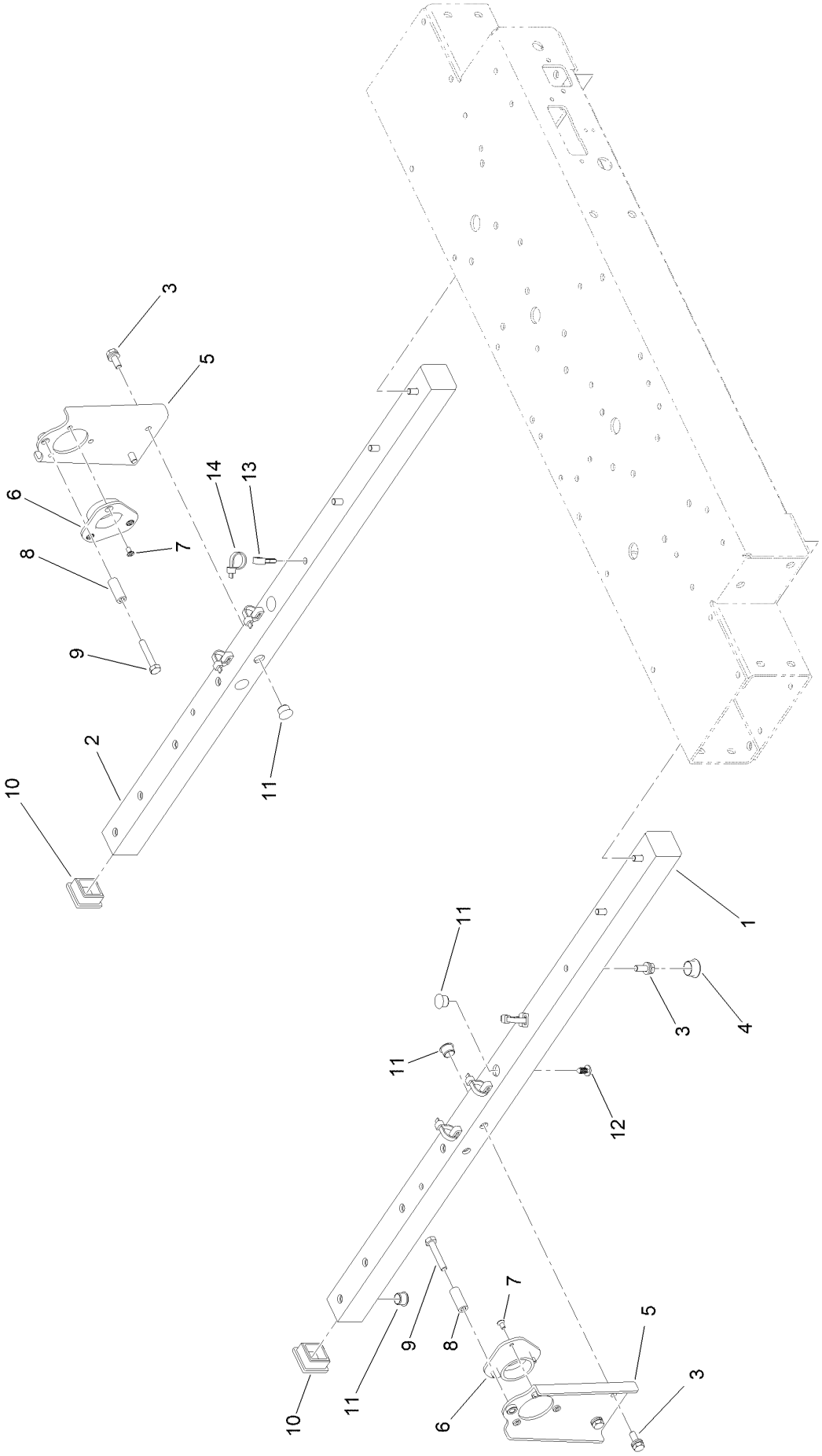

Frame Support Assembly (continued)

Ref.	Part Number	Qty.	Description
1	163-5463	1	LH Frame Tube ASM
2	163-5464	1	RH Frame Tube ASM
3	163-5408	10	Screw-HWH, Sems
4	163-5377	6	Plug-Cap, Round
5	163-5467	2	Bracket-Mount, Tube
6	163-5468	2	Bearing-Tube, Molded
7	163-5469	6	Screw-Pcs
8	163-5470	2	Spacer-Threaded
9	163-5482	2	Screw-HH
10	163-5465	4	Plug-Cap, Square
11	163-5466	14	Plug-Cap, Round
12	163-5401	2	Rivet-Push
13	163-5384	6	Mount-Cable Tie
14	3290-378	6	Tie-Cable

Lift Sensors Assembly

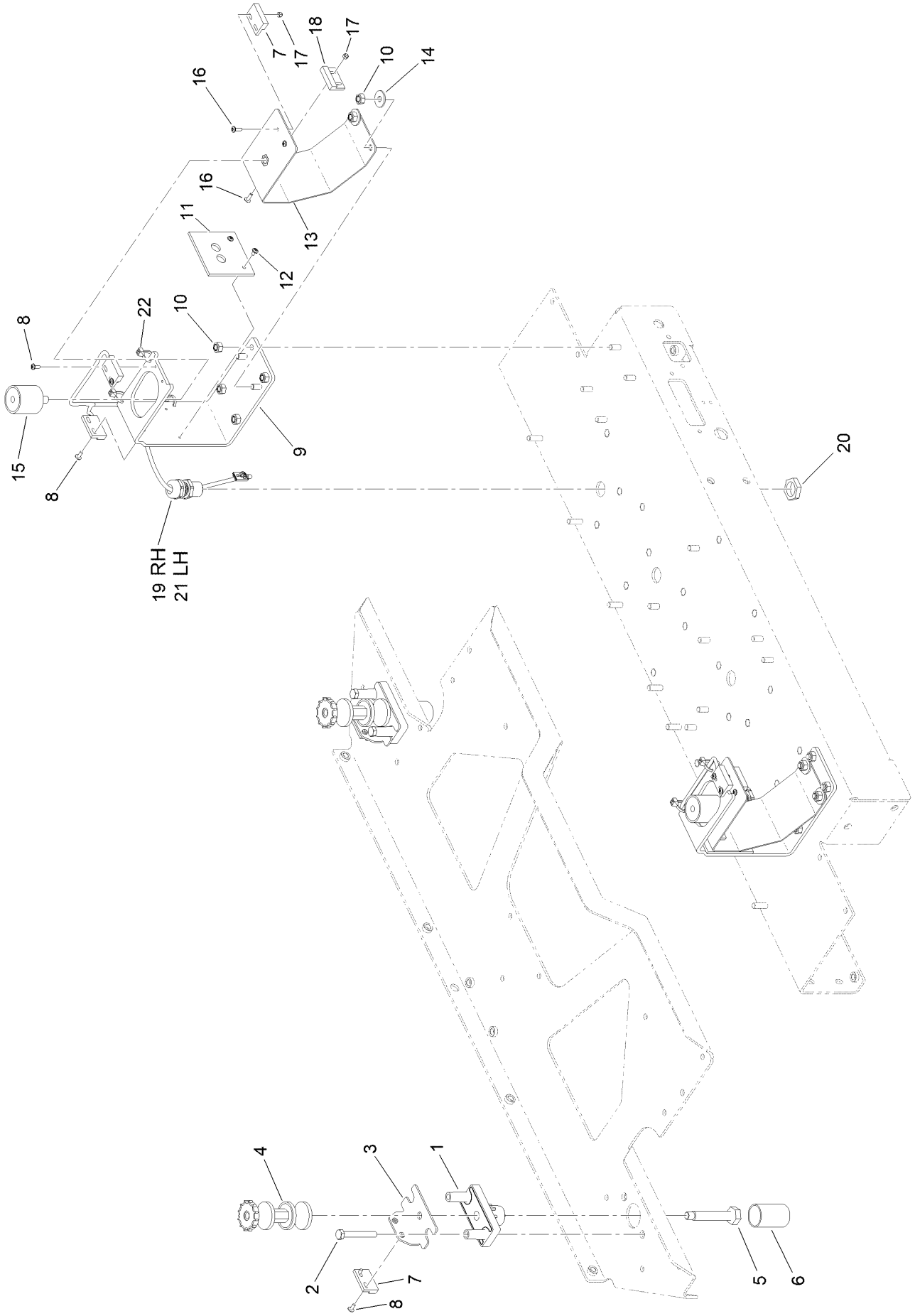

Lift Sensors Assembly (continued)

Ref.	Part Number	Qty.	Description
1	163-5473	2	Slide-Sensor, Lift
2	163-5478	4	Screw-HH
3	163-5474	2	Bracket-Lift Sensor
4	163-5479	2	Front Cushion ASM
5	163-5476	2	Screw-Shoulder
6	163-5477	2	Cap-Sensor, Lift
7	163-5475	4	Magnet
8	163-5421	12	Screw-Hsbhf
9	163-5486	2	Sensor Bracket ASM
10	163-5416	12	Nut-Hex, NI
11	163-5488	2	Pad-Sensor, Rubber
12	163-5487	4	Screw-Hsbhf
13	163-5483	2	Sensor Spring ASM
14	163-5485	4	Washer-Flat
15	163-5489	2	Isolator
16	163-5413	8	Screw-Hsbhf
17	163-5484	8	Nut-Hex, NI
18	163-5392	2	Magnet-Bonnet
19	163-5471	1	Cable-Sensor, Rear, RH
20	163-5418	2	Nut-Cable, Gland
21	163-5472	1	Cable-Sensor, Rear, LH
22	1-303287	6	Tie-Cable

Wheels and Drive Motor Assembly

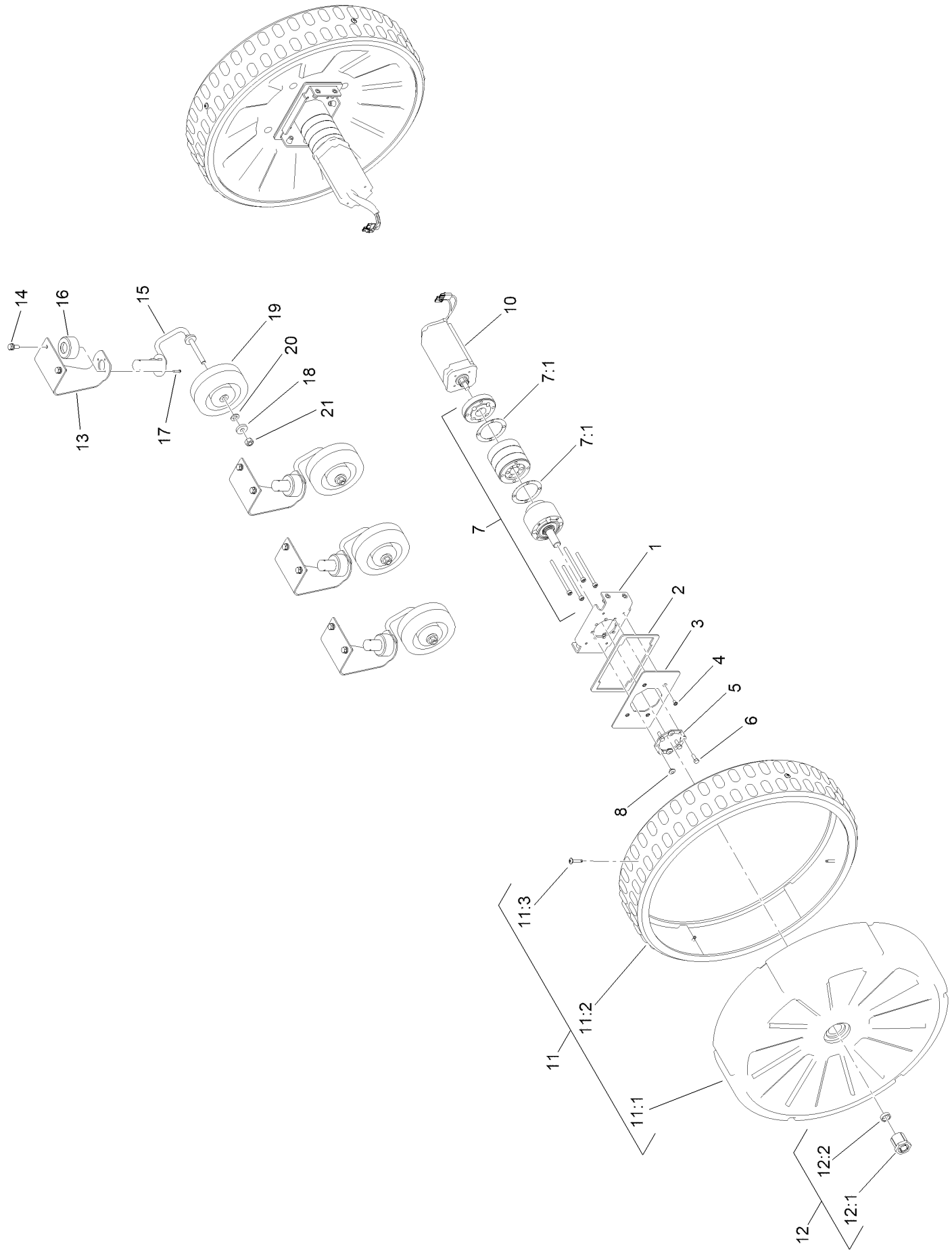

Wheels and Drive Motor Assembly (continued)

Ref.	Part Number	Qty.	Description
1	163-5504	2	Gearmotor Mount ASM
2	163-5508	2	Gasket-Plate, Gearmotor
3	163-5506	2	Plate-Seal, Gearmotor
4	163-5469	8	Screw-Pcs
5	163-5507	2	Washer-Mount, Gearmotor
6	163-5505	8	Screw-HH
7	163-5681	2	Gearbox
7:1	164-2981	2	Gasket-Gearbox
8	163-5509	8	Plug-Cap, Round
10	163-5683	2	Motor-Wheel, Slope
11	163-5560	2	Rear Wheel ASM
11:1	163-5490	1	Rear Wheel Hub ASM
11:2	163-5491	1	Tire-Rear
11:3	163-5492	4	Screw-Pbhf
12	163-5495	2	Rear Wheel Retainer Kit
12:1	163-5493	1	Wheel Retainer ASM
12:2	163-5494	1	Spacer
13	163-5498	4	Bracket-Mount,Wheel, Front
14	163-5408	8	Screw-HWH, Sems
15	163-5497	4	Front Wheel Hub ASM
16	163-5499	4	Support-Hub, Wheel, Front
17	163-5500	16	Screw-Pzph
18	HDW19425	8	Washer,M8,21MM OD,4MM Th,ST/ST
19	163-5501	4	Wheel-Front
20	163-5502	4	Washer-Flat
21	163-5503	4	Nut-Hex, NI

Cutting Heads Assembly

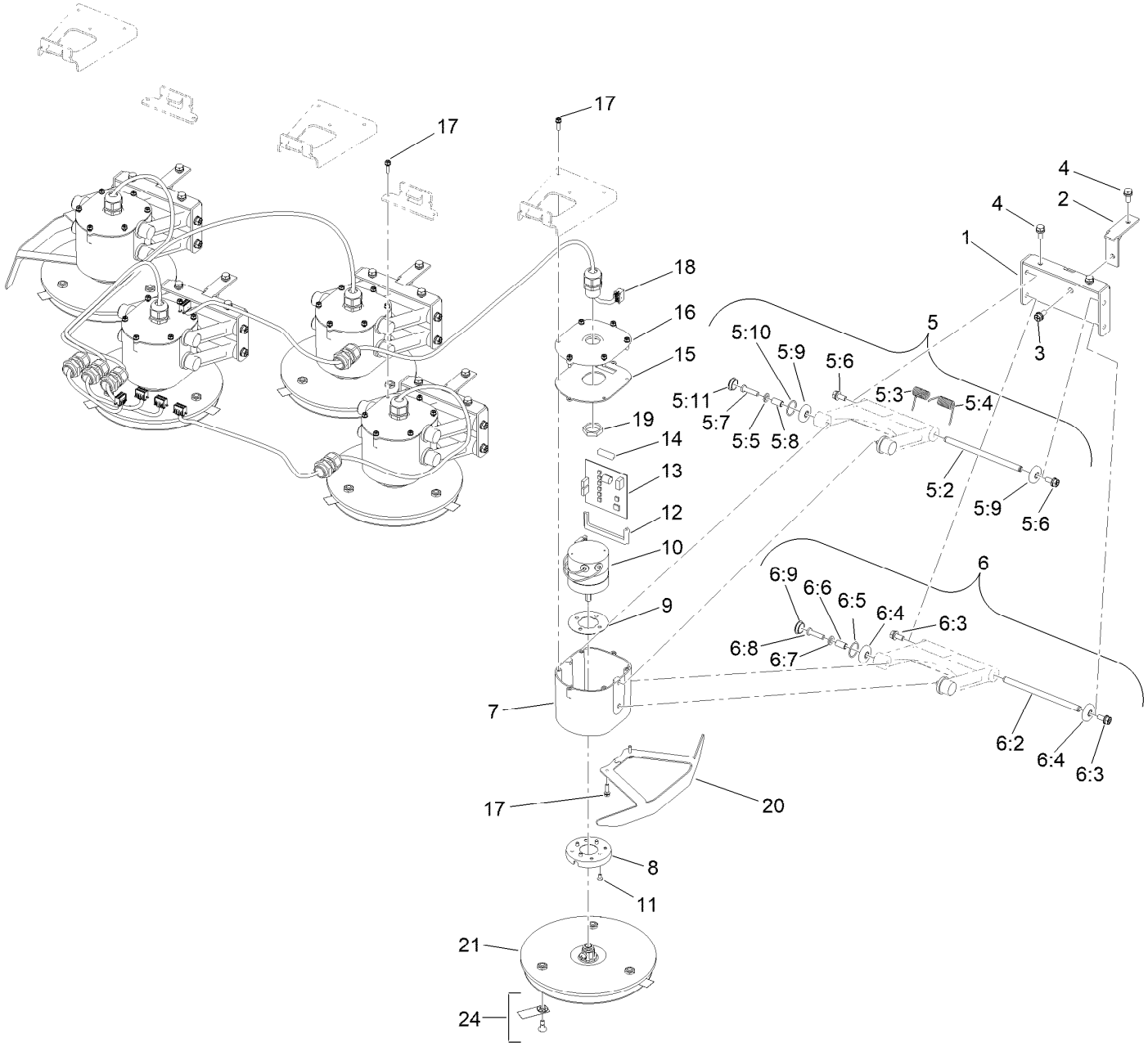

Cutting Heads Assembly (continued)

Ref.	Part Number	Qty.	Description
1	163-5510	5	Bracket-Mount, Cutting Head
2	163-5511	5	Gusset-Mount, Cutting Head
3	163-5512	5	Screw-Hph, Sems
4	163-5408	15	Screw-HWH, Sems
5	163-5814	5	Stay Kit, Upper
5:2	163-5514	1	Shaft-Long, Control Arm
5:3	163-5515	1	Spring-Torsion, LH
5:4	163-5516	1	Spring-Torsion, RH
5:5	163-5417	3	Washer-Flat
5:6	163-5512	2	Screw-Hph, Sems
5:7	163-5518	2	Screw-Hsph
5:8	163-5519	2	Shaft-Short, Control Arm
5:9	163-5517	3	Cap-Sensor, Lift
5:10	163-5520	2	O-Ring
5:11	163-5521	2	Plug-Cap, Round
6	163-5815	5	Stay Kit, Lower
6:2	163-5514	1	Shaft-Long, Control Arm
6:3	163-5512	2	Screw-Hph, Sems
6:4	163-5517	3	Cap-Sensor, Lift
6:5	163-5520	2	O-Ring
6:6	163-5519	2	Shaft-Short, Control Arm
6:7	163-5417	2	Washer-Flat
6:8	163-5518	2	Screw-Hsph
6:9	163-5521	2	Plug-Cap, Round
7	163-5522	5	Case-Motor, Cutting Head
8	163-5524	5	Guard-Motor, Cutting Head
9	163-5589	5	Gasket-Motor, Cutting Head
10	163-5590	5	Motor-Cutting Head
11	163-5469	20	Screw-Pcs
12	163-5621	5	Cushion-Lower, Drive Card
13	163-5640	5	Card-Drive, Cutting Head
14	163-5622	5	Cushion-Upper, Drive Card
15	163-5582	5	Gasket-Cover, Cutting Head
16	163-5526	5	Cover-Cutting Head
17	163-5424	34	Screw-Hph, Sems
18	163-5649	5	Cable-Motor, Cutting Head
19	163-5543	10	Nut-Plastic, Gland
20	163-5546	2	Guard-Safety, Disc
21	163-5579	5	Cutting Disc Kit No Blades
24	163-5574	1	15 Pack Blades
24	163-5575	1	50 Pack Blades
24	163-5576	1	500 Pack Blades

Cutting Disc Assembly No. 163-5579

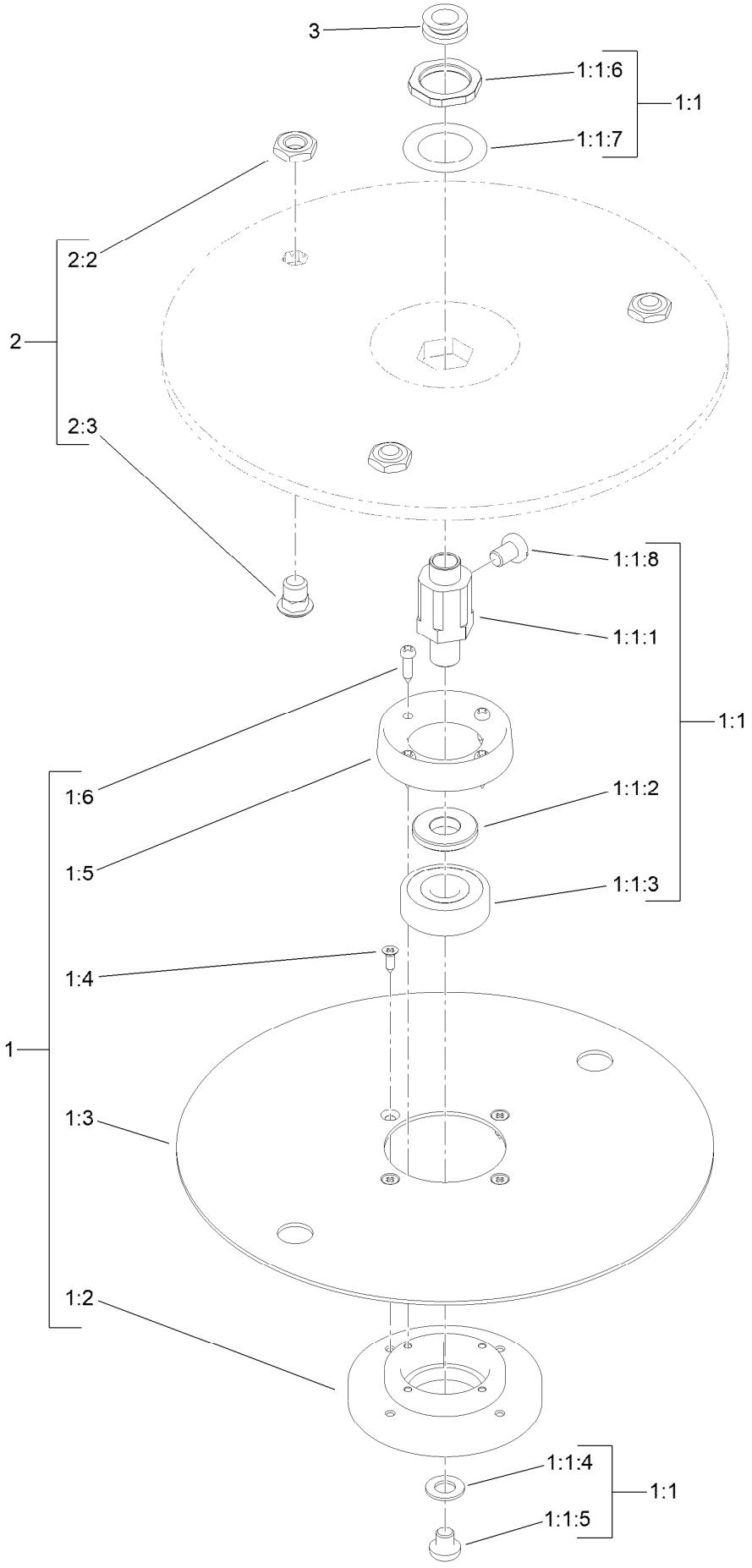

Cutting Disc Assembly No. 163-5579 (continued)

Ref.	Part Number	Qty.	Description
1	163-5816	1	Disc Kit, Free
1:1	163-5568	1	Shaft And Bearing Kit
1:1:1	163-5530	1	Shaft-Cutter
1:1:2	163-5531	1	Spacer-Stepped, Shaft
1:1:3	164-0092	1	Bearing-Ball
1:1:4	163-3854	1	Washer-Flat
1:1:5	163-5534	1	Screw-HSBH
1:1:6	163-5535	1	Nut-Hex
1:1:7	163-5536	1	Washer-Shim
1:1:8	163-5537	1	Screw-Pbh
1:2	163-5527	1	Cap-Cutting Head
1:3	163-5528	1	Disc-Anti Friction
1:4	163-5529	4	Screw-Pzcs
1:5	163-5538	1	Cap-Hub
1:6	163-5539	4	Screw-Pbh
2	163-5569	1	Kit-Disc, Blade
2:2	163-5541	3	Nut-Hex, Thin
2:3	163-5542	3	Stud-Cutting Head
3	163-5580	1	Seal-V-Ring

Electrical Parts Assembly

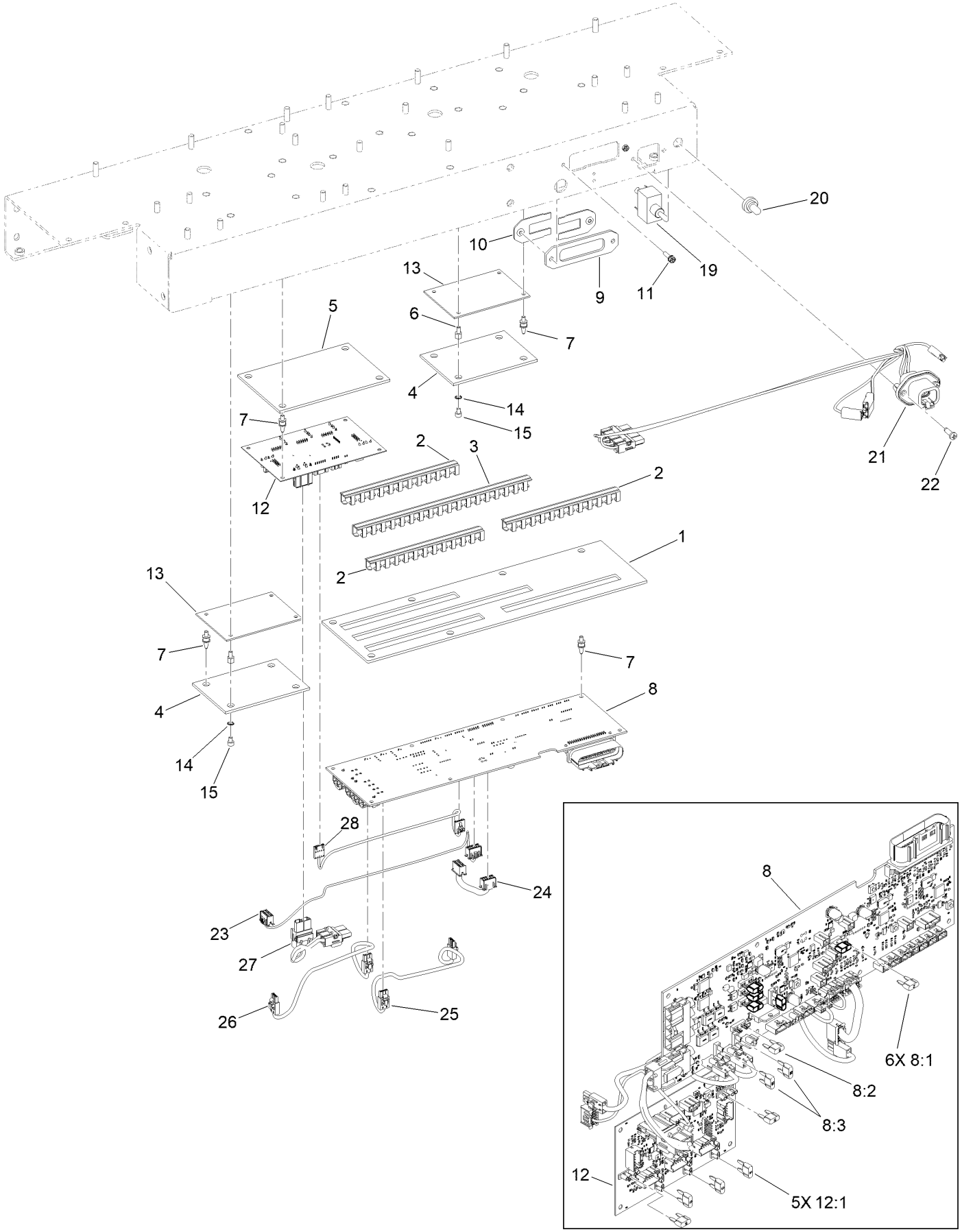

Electrical Parts Assembly (continued)

Ref.	Part Number	Qty.	Description
1	163-5643	1	Foam-Anti-Condensing, Peripheral
2	163-5641	3	Duct-Cable, 15CM
3	163-5642	1	Duct-Cable, 23CM
4	163-5644	2	Foam-Anti-Condensing, Motor
5	163-5645	1	Foam-Anti-Condensing, Cutting
6	163-5545	4	Spacer-Hex, Pcb
7	163-5544	14	Support-Pcb
8	163-5650	1	Peripheral Board ASM
8:1	121-8861	6	Fuse-Mini Blade, 2 Amp
8:2	121-8864	1	Fuse-Mini Blade, 5 Amp
8:3	121-8867	2	Fuse-Mini Blade, 15 Amp
9	163-5550	1	Seal-Connector
10	163-5549	2	Pcb Retainer ASM
11	163-5424	2	Screw-Hph, Sems
12	163-5660	1	Cutting Control Board ASM
12:1	121-8864	5	Fuse-Mini Blade, 5 Amp
13	163-5652	2	Card-Drive, Traction
14	163-5552	4	Washer-Tooth, EXT
15	163-5551	4	Screw-HSH
19	163-5547	1	Switch-Toggle
20	163-5548	1	Cap-Switch, Rubber
21	163-5658	1	Cable-Power Supply
22	163-5442	2	Screw-Pz, Plastic
23	163-5653	1	Cable-Motor, Signal, LH
24	163-5656	1	Cable-Motor, Signal, RH
25	163-5655	1	Cable-Power, RH
26	163-5654	1	Cable-Power, LH
27	163-5657	1	Cable-Power, Cutting Board
28	163-5659	1	Cable-Signal, Cutting Pcb

Attachments and Accessories

For 30922ANZ — Turf Pro 500S Robotic Mower

Product Name	Model/Part
Kit-Low Height Cut Disc	163-3850
Kit-Ball Deflector Flaps	163-3855
Cable-Diagnostic	163-3870
Charger-Mobile	163-3871
Cable-Battery/Wake-up	163-3872
Stops-Calibration	163-3873
Protector-Range, Cutting Disc	163-3923
Wire-Spool-1000 FT	163-3926
Wire-Spool-250 FT	163-3927
Kit- 1 Golf Disk, Upper Protection	163-3934
Kit- 5 Golf Disks, Upper Protection	163-3935
15 Pack Blades	163-5574
50 Pack Blades	163-5575
500 Pack Blades	163-5576
Cutting Disc Kit No Blades	163-5579
4G RTK Base ANZ	30912ANZ
Charge Station, Loop Only EU	30913EU
Charge Station, Two Loop EU	30914EU
WIFI RTK Base WW	30915

Notes:



Count on it.