Form No. 3481-356 Rev A

TORO®

Count on it.

Operator's Manual

TimeCutter® 5000 or MX 5000 Riding Mower

Model No. 75750—Serial No. 420000000 and Up
Model No. 75750TA—Serial No. 420431444 and Up
Model No. 75750W—Serial No. 420000000 and Up
Model No. 75759—Serial No. 420000000 and Up

Register at www.Toro.com.
Original Instructions (EN)

3481-356

It is a violation of California Public Resource Code Section 4442 or 4443 to use or operate the engine on any forest-covered, brush-covered, or grass-covered land unless the engine is equipped with a spark arrester, as defined in Section 4442, maintained in effective working order or the engine is constructed, equipped, and maintained for the prevention of fire.

Gross or Net Torque: The gross or net torque of this engine was laboratory rated by the engine manufacturer in accordance with the Society of Automotive Engineers (SAE) J1940 or J2723. As configured to meet safety, emission, and operating requirements, the actual engine torque on this class of mower will be significantly lower. Please refer to the engine manufacturer's information included with the machine.

The enclosed engine owner's manual is supplied for information regarding the US Environmental Protection Agency (EPA) and the California Emission Control Regulation of emission systems, maintenance, and warranty. Replacements may be ordered through the engine manufacturer.

⚠ WARNING

CALIFORNIA
Proposition 65 Warning

The engine exhaust from this product contains chemicals known to the State of California to cause cancer, birth defects, or other reproductive harm.

Battery posts, terminals, and related accessories contain lead and lead compounds, chemicals known to the State of California to cause cancer and reproductive harm. Wash hands after handling.

Use of this product may cause exposure to chemicals known to the State of California to cause cancer, birth defects, or other reproductive harm.

Introduction

This rotary-blade, riding lawn mower is intended to be used by homeowners in residential applications. It is designed primarily for cutting grass on well-maintained lawns. Using this product for purposes other than its intended use could prove dangerous to you and bystanders.

Read this information carefully to learn how to operate and maintain your product properly and to avoid injury and product damage. You are responsible for operating the product properly and safely.

Visit www.Toro.com for product safety and operation training materials, accessory information, help finding a dealer, or to register your product.

Whenever you need service, genuine Toro parts, or additional information, contact an Authorized Service Dealer or Toro Customer Service and have the model and serial numbers of your product ready. Figure 1 identifies the location of the model and serial numbers on the product. Write the numbers in the space provided.

Important: **With your mobile device, you can scan the QR code on the serial number decal (if equipped) to access warranty, parts, and other product information.**

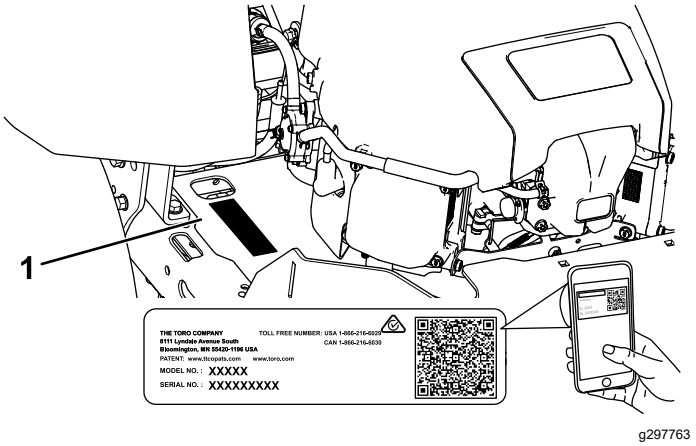

g297763

Figure 1
Behind the seat

1. Model and serial number location

Write the product model and serial numbers in the space below:

Model No. _____

Serial No. _____

This manual uses 2 words to highlight information. **Important** calls attention to special mechanical information and **Note** emphasizes general information worthy of special attention.

The safety-alert symbol (Figure 2) appears both in this manual and on the machine to identify important safety messages that you must follow to avoid accidents. This symbol will appear with the word **Danger**, **Warning**, or **Caution**.

© 2026—The Toro® Company
8111 Lyndale Avenue South
Bloomington, MN 55420

Contact us at www.Toro.com.
Printed in the USA
All Rights Reserved

- **Danger** indicates an imminently hazardous situation which, if not avoided, **will** result in death or serious injury.
- **Warning** indicates a potentially hazardous situation which, if not avoided, **could** result in death or serious injury.
- **Caution** indicates a potentially hazardous situation which, if not avoided, **may** result in minor or moderate injury.



sa-black

Figure 2

1. Safety-alert symbol

Contents

Safety 4
General Safety 4
Slope Indicator 5
Safety and Instructional Decals 6
Product Overview 11
Controls 13
Specifications 14
Attachments/Accessories 14
Before Operation 14
Before Operation Safety 14
Adding Fuel 15
Performing Daily Maintenance 16
Breaking in a New Machine 16
Using the Safety-Interlock System 16
Positioning the Seat 17
Adjusting the MyRide® Suspension System 17
Adjusting the Motion-Control Levers 18
During Operation 18
During Operation Safety 18
Operating the Mower Blade-Control Switch (PTO) 20
Operating the Throttle 21
Operating the Choke 21
Starting the Engine 21
Shutting Off the Engine 22
Using the Motion-Control Levers 22
Driving the Machine 22
Using the Smart Speed™ Control System 23
Using the Side Discharge 24
Adjusting the Height of Cut 24
Adjusting the Anti-Scalp Rollers 25
Operating Tips 25
After Operation 26
After Operation Safety 26
Cleaning the Machine 26
Pushing the Machine by Hand 26
Transporting the Machine 27
Maintenance 29
Maintenance Safety 29
Recommended Maintenance Schedule(s) 29
Pre-Maintenance Procedures 30
Raising the Machine 30
Lubrication 30
Greasing the Bearings 30
Engine Maintenance 31
Engine Safety 31
Servicing the Air Cleaner 31
Servicing the Engine Oil 32
Servicing the Spark Plug 34
Cleaning the Cooling System 34
Fuel System Maintenance 35
Replacing the In-Line Fuel Filter 35
Electrical System Maintenance 36
Electrical System Safety 36

Servicing the Battery 36
Servicing the Fuses 37
Drive System Maintenance 38
Checking the Tire Pressure 38
Adjusting the Tracking 38
Belt Maintenance 39
Inspecting the Belts 39
Replacing the Mower Belt 39
Mower Maintenance 40
Blade Safety 40
Servicing the Cutting Blades 40
Leveling the Mower Deck 43
Removing the Mower Deck 45
Installing the Mower Deck 46
Replacing the Grass Deflector 46
Cleaning 47
Washing the Underside of the Mower Deck 47
Disposing of Waste 48
Storage 48
Storage Safety 48
Cleaning and Storage 48
Storing the Battery 49
Troubleshooting 50
Schematics 52

Safety

General Safety

This product is capable of amputating hands and feet and of throwing objects. Always follow all safety instructions to avoid serious personal injury or death.

- Read and understand the contents of this *Operator's Manual* before starting the engine.
- Keep bystanders and children away.
- Do not allow children or untrained people to operate or service the machine. Allow only people who are responsible, trained, familiar with the instructions, and physically capable to operate or service the machine.
- Do not operate the machine near drop-offs, ditches, embankments, water, or other hazards, or on slopes greater than 15°.
- Do not put your hands or feet near moving components of the machine.
- Do not operate the machine without all guards, safety switches, and other safety protective devices in place and functioning properly.
- Shut off the engine, remove the key, and wait for all moving parts to stop before leaving the operator's position. Allow the machine to cool before servicing, adjusting, fueling, cleaning, or storing it.

Slope Indicator

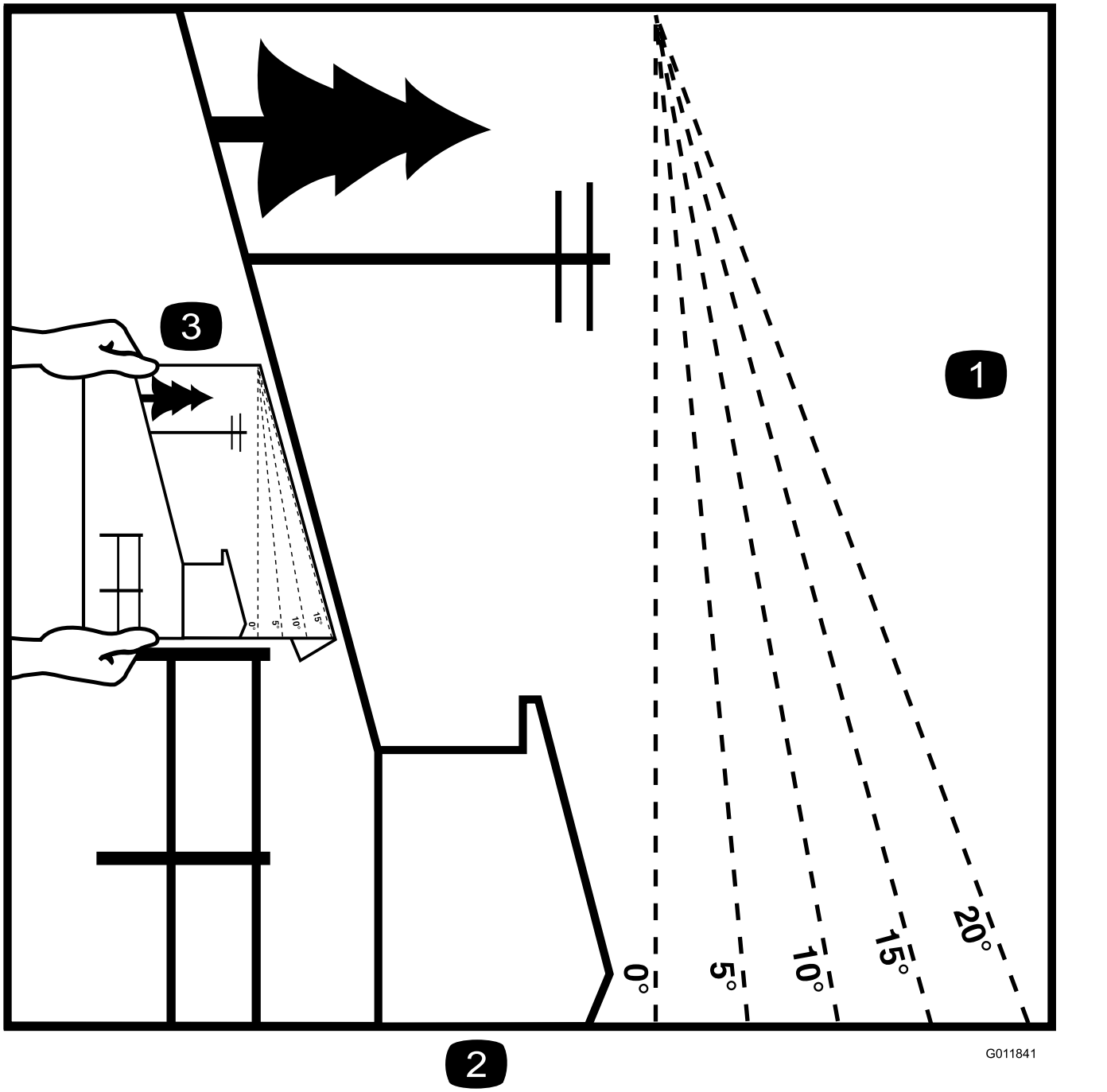

Figure 3

You may copy this page for personal use.

1. The maximum slope you can operate the machine on is **15 degrees**. Use the slope chart to determine the degree of slope of hills before operating. **Do not operate this machine on a slope greater than 15 degrees.** Fold along the appropriate line to match the recommended slope.
2. Align this edge with a vertical surface, a tree, building, fence pole, etc.
3. Example of how to compare slope with folded edge

Safety and Instructional Decals

Safety decals and instructions are easily visible to the operator and are located near any area of potential danger. Replace any decal that is damaged or missing.



decalbatterysymbols

Battery Symbols

Some or all of these symbols are on your battery.

1. Explosion hazard
2. No fire, open flame, or smoking
3. Caustic liquid/chemical burn hazard
4. Wear eye protection.
5. Read the *Operator's Manual*.
6. Keep bystanders away from the battery.
7. Wear eye protection; explosive gases can cause blindness and other injuries.
8. Battery acid can cause blindness or severe burns.
9. Flush eyes immediately with water and get medical help fast.
10. Contains lead; do not discard

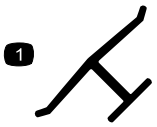

decaloemmarkt

Manufacturer's Mark

1. This mark indicates that the blade is identified as a part from the original machine manufacturer.

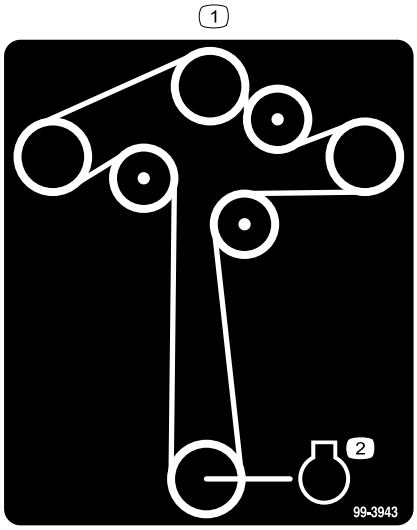

decal99-3943

99-3943

1. Belt routing
2. Engine

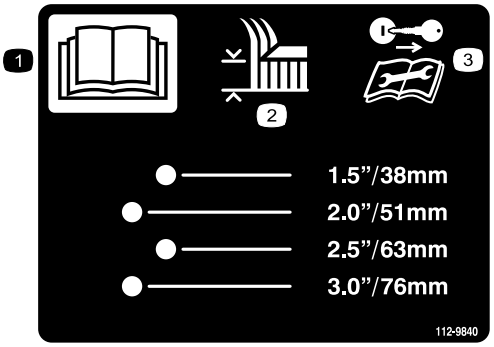

decal112-9840

112-9840

1. Read the *Operator's Manual*.
2. Height of cut
3. Remove the ignition key and read the instructions before servicing or performing maintenance.

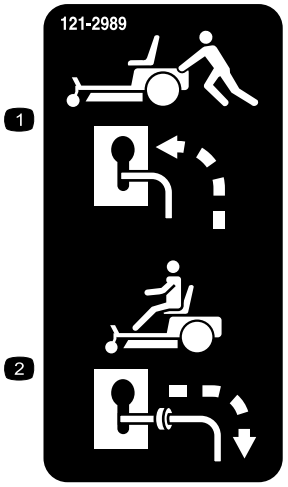

decal121-2989b

121-2989

1. Bypass lever position for pushing the machine
2. Bypass lever position for operating the machine



decal130-0731

130-0731

1. Warning—thrown object hazard; keep the deflector shield in place.
2. Cutting hazard of hand or foot, mower blade—keep away from moving parts.

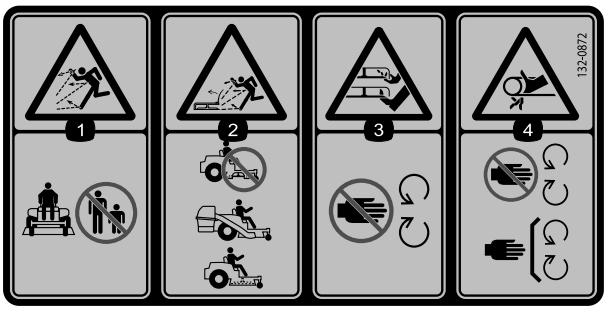

decal132-0872

132-0872

1. Thrown object hazard—keep bystanders away from the machine.
2. Thrown object hazard, raised deflector—do not operate the machine with an open deck; use a bagger or a deflector.
3. Severing hazard of hand or foot—keep away from moving parts.
4. Entanglement hazard—keep away from moving parts; keep all guards and shields in place.

Decal 138-6074 is molded into the fuel tank.

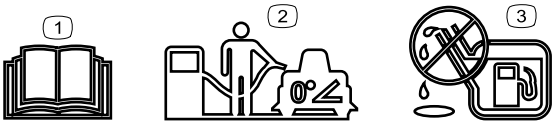

decal138-2456

138-6074

1. Read the *Operator's Manual*.
2. Park the machine on a level surface when filling the fuel tank.
3. Do not overfill the fuel tank.

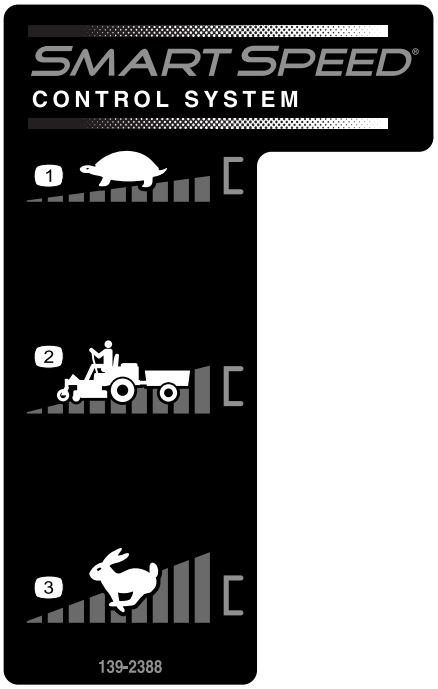

decal139-2388

139-2388

1. Slow
2. Hauling
3. Fast

Decal 139-2391 is for machines without an hour meter.

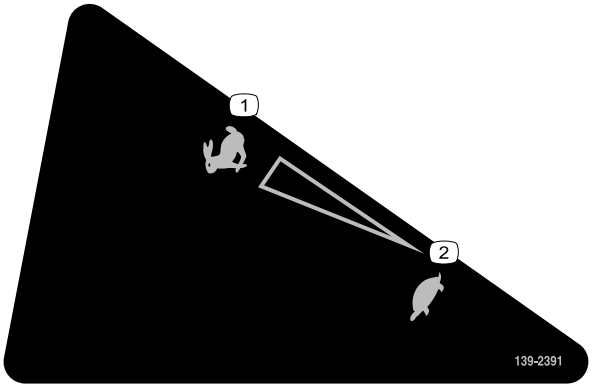

decal139-2391

139-2391

1. Fast
2. Slow



decal139-2392

139-2392

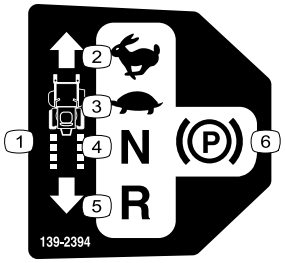

decal139-2394

139-2394

1. Traction controls
2. Fast
3. Slow
4. Neutral
5. Reverse
6. Parking brake

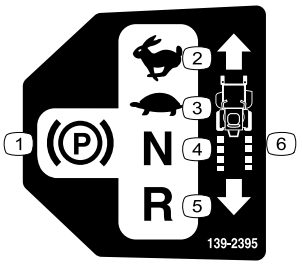

decal139-2395

139-2395

1. Parking brake
2. Fast
3. Slow
4. Neutral
5. Reverse
6. Traction controls

Decal 139-2397 is for models with MyRide only.



decal139-2397

139-2397

Decal 140-2717 is for models with an hour meter only.

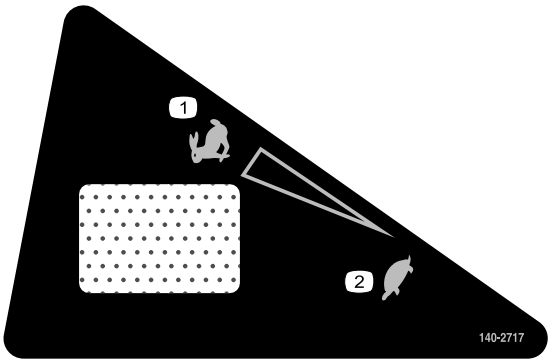

decal140-2717

140-2717

1. Fast
2. Slow



decal142-5864

142-5864

Decal 144-5288 is for models without MyRide only.

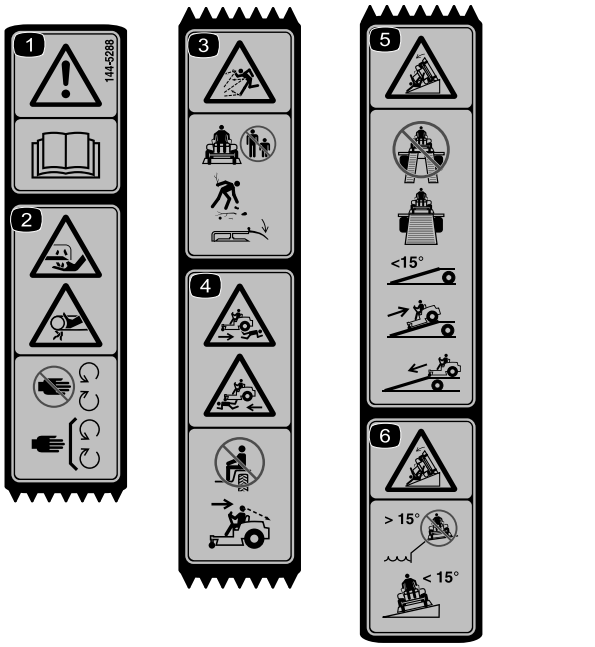

decal144-5288

144-5288

Note: This machine complies with the industry standard stability test in the static lateral and longitudinal tests with the maximum recommended slope indicated on the decal. Review the instructions for operating the machine on slopes in the *Operator's Manual* as well as the conditions in which you would operate the machine to determine whether you can operate the machine in the conditions on that day and at that site. Changes in the terrain can result in a change in slope operation for the machine.

1. Warning—read the *Operator's Manual*.
2. Cutting/dismemberment hazard of the fingers or hand—keep hands away from moving parts; keep all guards and shields in place.
3. Thrown object hazard—keep bystanders away; pick up any debris; keep the deflector in place.
4. Runover hazard—do not carry passengers; look behind you when moving in reverse.
5. Tipping hazard—when loading onto a trailer, do not use dual ramps; only use a singular ramp wide enough for the machine; do not use a ramp with a slope greater than 15°; back up the ramp (in reverse) and drive forward off the ramp.
6. Tipping hazard—do not use the machine near drop-offs or on slopes greater than 15°; only operate across slopes less than 15°.

Decal 132-0869 is for models with MyRide only.

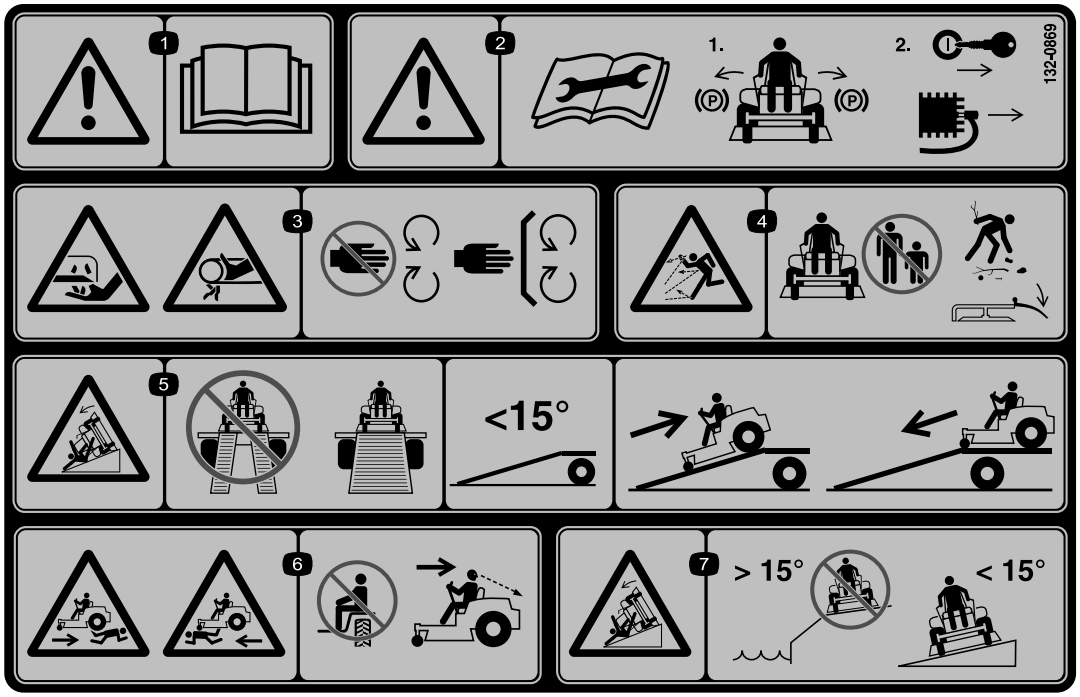

decal132-0869

132-0869

Note: This machine complies with the industry standard stability test in the static lateral and longitudinal tests with the maximum recommended slope indicated on the decal. Review the instructions for operating the machine on slopes in the *Operator's Manual* as well as the conditions in which you would operate the machine to determine whether you can operate the machine in the conditions on that day and at that site. Changes in the terrain can result in a change in slope operation for the machine.

1. Warning—read the *Operator's Manual*.
2. Warning—read the *Operator's Manual* before performing maintenance; engage the parking brake, remove the key, and disconnect the spark plug.
3. Cutting/dismemberment hazard of the hand, mower blade; entanglement hazard of the hand, belt—stay away from moving parts; keep all guards and shields in place.
4. Thrown object hazard—keep bystanders away; pick up debris before operating; keep the deflector in place.
5. Tipping hazard—do not use dual ramps when loading onto a trailer; use 1 ramp wide enough for the machine; use a ramp with a slope less than 15°; back up the ramp when loading the machine and drive forward off the ramp when unloading.
6. Runover hazard—do not carry passengers; look behind you when mowing in reverse.
7. Tipping hazard—do not use the machine near drop-offs or on slopes greater than 15°; only operate across slopes less than 15°.

Product Overview

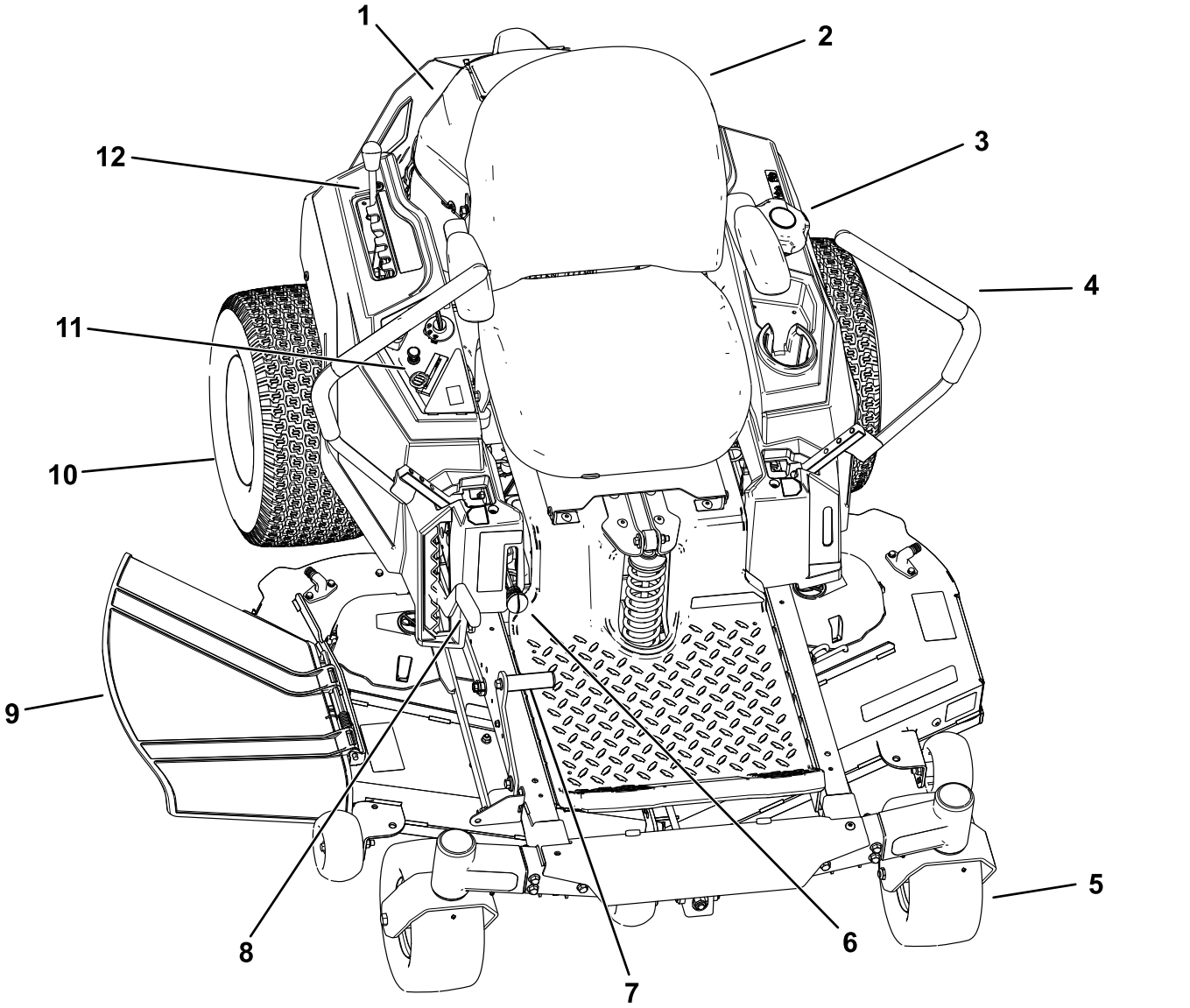

Figure 4
Models with MyRide

1. Engine
2. Operator seat
3. Fuel-tank cap
4. Motion-control levers
5. Front caster wheel
6. Smart Speed™ lever
7. Deck-lift pedal
8. Height-of-cut lever
9. Deflector
10. Rear drive wheel
11. Control panel
12. MyRide™ adjustment lever

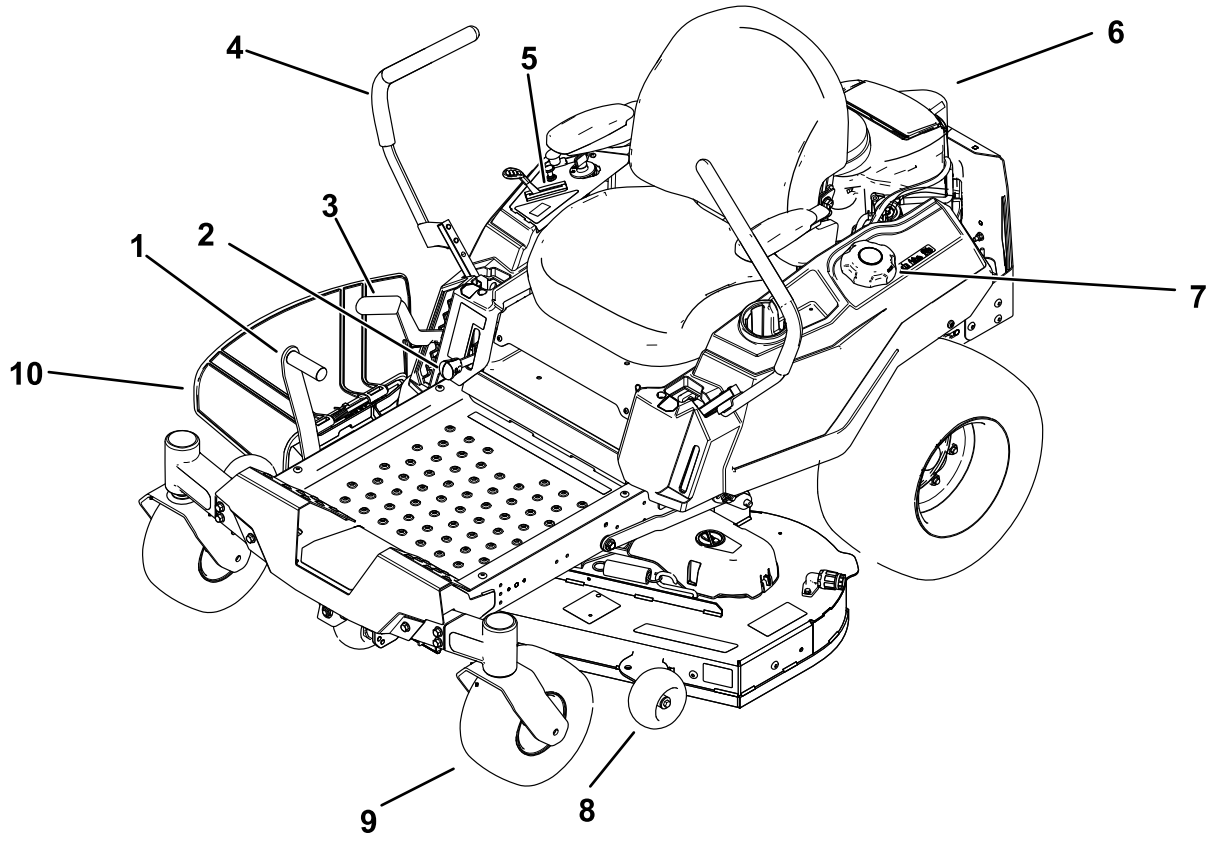

g299962

Figure 5
Models without MyRide

1. Deck-lift pedal
2. Smart Speed™ lever
3. Height-of-cut lever
4. Motion-control levers
5. Control panel
6. Engine
7. Fuel-tank cap
8. Anti-scalp roller
9. Front caster wheel
10. Deflector

Controls

Become familiar with all the controls before you start the engine and operate the machine.

Control Panel

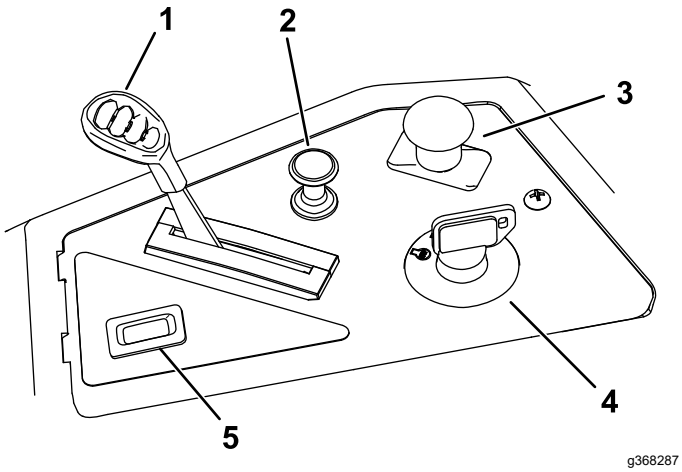

Figure 6

1. Throttle control
2. Choke control
3. Blade-control switch (power takeoff)
4. Key switch
5. Hour meter (if equipped)

Key Switch

The key switch, used to start and shut off the engine, has 3 positions: OFF, RUN, and START (Figure 6).

Throttle Control

The throttle controls the engine speed, and it has a continuous-variable setting from the SLOW to FAST position (Figure 6).

Choke Control

Use the choke control to start a cold engine (Figure 6).

Blade-Control Switch (Power Takeoff)

The blade-control switch, represented by a power-takeoff (PTO) symbol, engages and disengages power to the mower blades (Figure 6).

Hour Meter (If Equipped)

The hour meter records the number of hours the engine has operated. It operates when the engine is running. Use these times for scheduling regular maintenance (Figure 6).

Motion-Control Levers

Use the motion-control levers to drive the machine forward, reverse, and turn either direction (Figure 4 and Figure 5).

Park Position

Move the motion-control levers outward from the center to the PARK position to engage the parking brake when stopping or exiting the machine.

MyRide™ Adjustment Lever

For Machines with the MyRide™ Suspension System

Use the MyRide™ adjustment lever to adjust the seat suspension (Figure 4).

Smart Speed™ Control System Lever

The Smart Speed™ Control-System lever, located below the operating position, gives you a choice to drive the machine at 3 speed ranges— trim, tow, and mow (Figure 4 and Figure 5).

Fuel-Presence Window

You can use the fuel window, located on the left side of the machine, to verify the presence of fuel in the tank (Figure 7).

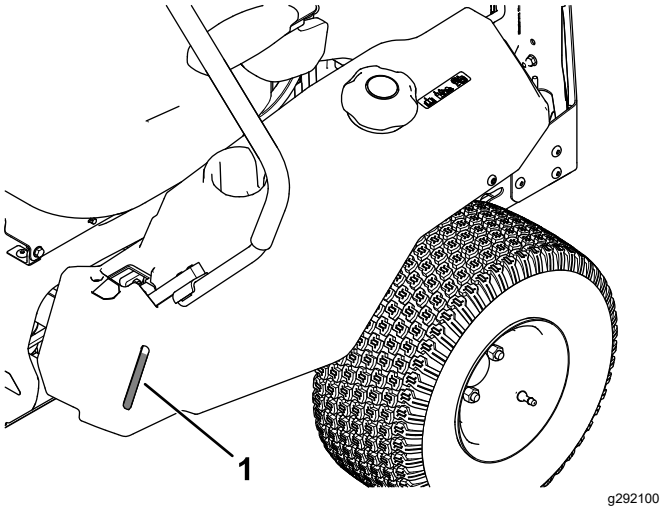

Figure 7

1. Fuel-presence window

Height-of-Cut Lever

Use the height-of-cut lever to lower and raise the deck from the seated position. Moving the lever up (toward you) raises the deck from the ground and moving the lever down (away from you) lowers the deck toward the ground. Adjust the height-of-cut only while the machine is not moving (Figure 4 and Figure 5).

Foot Pedal Deck-Lift System

The foot pedal deck-lift system allows you to lower and raise the deck from the seated position. You can use the foot pedal to lift the deck briefly to avoid obstacles (Figure 4 and Figure 5).

Specifications

Specifications and design are subject to change without notice.

Cutting width	127 cm (50 inches)
Width with deflector down	155 cm (61 inches)
Width with deflector raised	130 cm (51 inches)
Length	186 cm (73 inches)
Height	113 cm (44 inches)
Weight (non-MyRide machines)	362 kg (798 lb)
Weight (MyRide machines)	375 kg (826 lb)

Attachments/Accessories

A selection of Toro approved attachments and accessories is available for use with the machine to enhance and expand its capabilities. Contact your Authorized Service Dealer or authorized Toro distributor or go to www.Toro.com for a list of all approved attachments and accessories.

To ensure optimum performance and continued safety certification of the machine, use only genuine Toro replacement parts and accessories. Replacement parts and accessories made by other manufacturers could be dangerous, and such use could void the product warranty.

Operation

Note: Determine the left and right sides of the machine from the normal operating position.

Before Operation

Before Operation Safety

General Safety

- Do not allow children or untrained people to operate or service the machine. Local regulations may restrict the age of the operator. The owner is responsible for training all operators and mechanics.
- Inspect the area where you will use the machine, and remove all objects that could interfere with the operation of the machine or that the machine could throw.
- Become familiar with the safe operation of the equipment, operator controls, and safety signs.
- Check that operator-presence controls, safety switches, and guards are attached and working properly. Do not operate the machine unless they are functioning properly.
- Shut off the engine, remove the key, and wait for all moving parts to stop before leaving the operator's position. Allow the machine to cool before servicing, adjusting, fueling, cleaning, or storing it.
- Before mowing, inspect the machine to ensure that the cutting assemblies are working properly.
- Evaluate the terrain to determine the appropriate equipment and any attachments or accessories required to operate the machine properly and safely.
- Wear appropriate clothing, including eye protection; long pants; substantial, slip-resistant footwear; and hearing protection. Tie back long hair and do not wear loose clothing or loose jewelry.
- Do not carry passengers on the machine.
- Keep bystanders and pets away from the machine during operation. Shut off the machine and attachment(s) if anyone enters the area.
- Do not operate the machine unless all guards and safety devices, such as the deflectors and the entire grass catcher, are in place and functioning properly. Replace worn or deteriorated parts when necessary.

Fuel Safety

- Fuel is extremely flammable and highly explosive. A fire or explosion from fuel can burn you and others and can damage property.
  - To prevent a static charge from igniting the fuel, remove the machine from the truck or trailer and refuel it on the ground, away from all vehicles. If this is not possible, place a portable fuel container on the ground, away from all vehicles, and fill it; then refuel the machine from the fuel container rather than from a fuel-dispenser nozzle.
  - Fill the fuel tank outdoors on level ground, in an open area, and when the engine is cold. Wipe up any fuel that spills.
  - Do not handle fuel when smoking or around an open flame or sparks.
  - Do not remove the fuel cap or add fuel to the tank while the engine is running or hot.
  - If you spill fuel, do not attempt to start the engine. Avoid creating a source of ignition until the fuel vapors have dissipated.
  - Store fuel in an approved container and keep it out of the reach of children.
- Fuel is harmful or fatal if swallowed. Long-term exposure to vapors can cause serious injury and illness.
  - Avoid prolonged breathing of vapors.
  - Keep your hands and face away from the nozzle and the fuel-tank opening.
  - Keep fuel away from your eyes and skin.
- Do not store the machine or fuel container where there is an open flame, spark, or pilot light, such as on a water heater or on other appliances.
- Do not operate the machine without the entire exhaust system in place and in proper working condition.
- Keep the fuel-dispenser nozzle in contact with the rim of the fuel tank or container opening at all times until fueling is complete. Do not use a nozzle lock-open device.
- If you spill fuel on your clothing, change your clothing immediately.
- Do not overfill the fuel tank. Replace the fuel cap and tighten it securely.
- Clean grass and debris from the cutting unit, muffler, drives, grass catcher, and engine compartment to help prevent fires. Clean up oil or fuel spills.

Adding Fuel

Recommended Fuel

Type	Unleaded gasoline
Minimum octane rating	87 (US) or 91 (research octane; outside the US)
Ethanol	No more than 10% by volume
Methanol	None
MTBE (methyl tertiary butyl ether)	Less than 15% by volume
Oil	Do not add to the fuel

Use only clean, fresh (no more than 30 days old), fuel from a reputable source.

Using Stabilizer/Conditioner

Use fuel stabilizer/conditioner in the machine to keep the fuel fresh longer when used as directed by the fuel-stabilizer manufacturer.

Important: **Do not use fuel additives containing methanol or ethanol.**

Add the amount of fuel stabilizer/conditioner to fresh fuel as directed by the fuel-stabilizer manufacturer.

Filling the Fuel Tank

1. Park the machine on a level surface.
2. Move the motion-control levers outward to the PARK position.
3. Shut off the engine and remove the key.
4. Clean around the fuel-tank cap.
5. Fill the fuel tank to the bottom of the filler neck (Figure 8). Do not fill the fuel tank completely full.

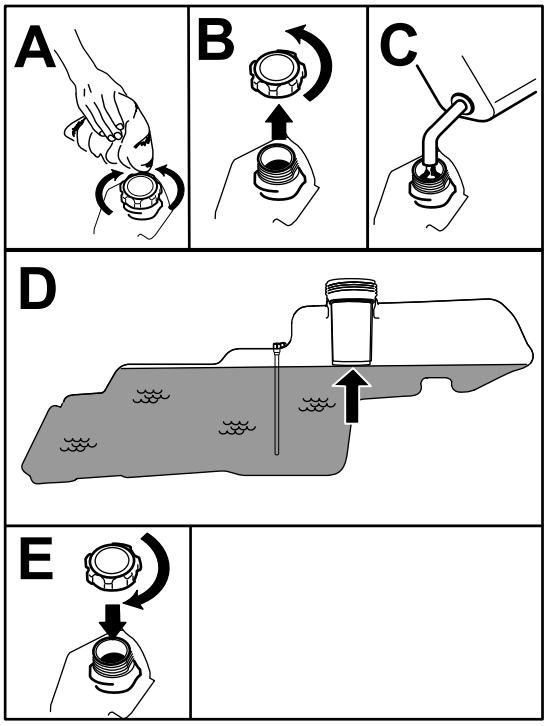

g293796

Figure 8

Performing Daily Maintenance

Before starting the machine each day, perform the Each Use/Daily procedures listed in Maintenance (page 29).

Breaking in a New Machine

New engines take time to develop full power. Mower decks and drive systems have higher friction when new, placing additional load on the engine. Allow 40 to 50 hours of break-in time for new machines to develop full power and best performance.

Using the Safety-Interlock System

⚠ WARNING

If the safety-interlock switches are disconnected or damaged, the machine could operate unexpectedly, causing personal injury.

- **Do not tamper with the interlock switches.**
- **Check the operation of the interlock switches daily and replace any damaged switches before operating the machine.**

Understanding the Safety-Interlock System

The safety-interlock system is designed to prevent the engine from starting unless:

- The blade-control switch (PTO) is disengaged.
- The motion-control levers are in the PARK position.

The safety-interlock system also is designed to shut off the engine whenever the control levers are out of the PARK position and you rise from the seat.

Testing the Safety-Interlock System

Test the safety-interlock system before you use the machine each time. If the safety system does not operate as described below, have an Authorized Service Dealer repair the safety system immediately.

1. Sit on the seat, move the motion-control levers in the PARK position, and move the blade-control switch to the ON position. Try starting the engine; the engine should not crank.
2. Sit on the seat and move the blade-control switch to the OFF position. Move either motion-control lever to the center, unlocked position. Try starting the engine; the engine should not crank. Repeat with the other motion-control lever.
3. Sit on the seat, move the blade-control switch to the OFF position, and lock the motion-control levers in the PARK position. Start the engine. While the engine is running, engage the blade-control switch, and rise slightly from the seat; the engine should shut off.
4. Sit on the seat, move the blade-control switch to the OFF position, and lock the motion-control levers in the PARK position. Start the engine. While the engine is running, move the motion-control levers to the center, unlocked position and rise slightly from the seat; the engine should shut off.

Positioning the Seat

The seat can move forward and backward. Position the seat where you have the best control of the machine and are most comfortable (Figure 9 or Figure 10).

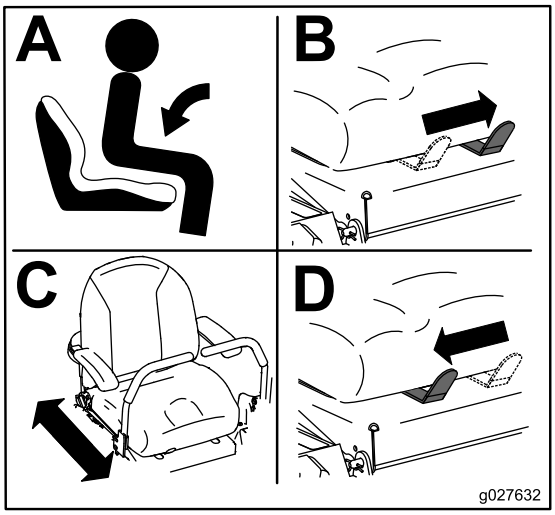

g027632

Figure 9

Machines with MyRide

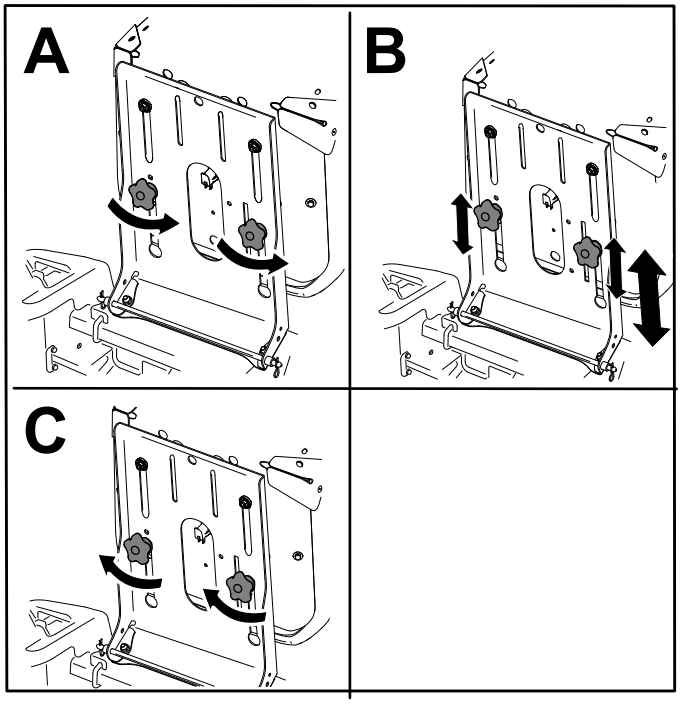

g293874

Figure 10

Machines without MyRide

Adjusting the MyRide® Suspension System

Machines with MyRide Only

You can adjust the MyRide® suspension system for a smooth and comfortable ride. The slots for adjusting the suspension have detent positions for reference, ranging from a soft to a firm ride (Figure 11).

1. Park the machine on a level surface, disengage the blade-control switch, and move the motion-control levers outward to the PARK position.
2. Shut off the engine, remove the key, and wait for all moving parts to stop before leaving the operating position.
3. Step off the machine.
4. While standing on the right side of the machine, move the adjustment lever left toward the – symbol for a softer suspension.

   Move the adjustment lever right toward the + symbol for a firmer suspension.

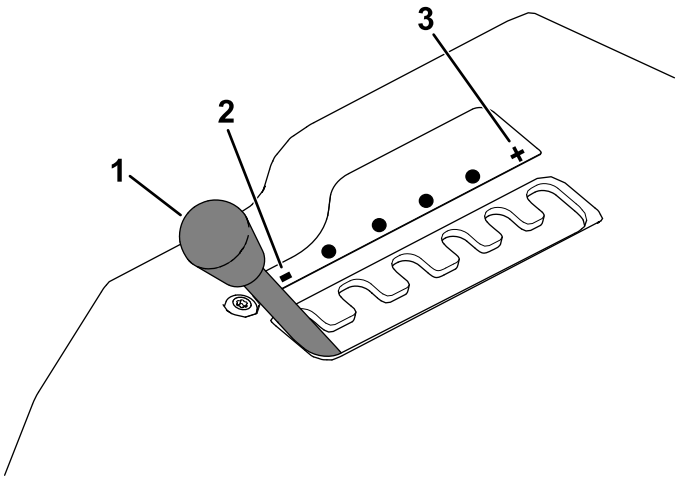

g292102

Figure 11

1. MyRide adjustment lever
2. Softer suspension
3. Firmer suspension

Adjusting the Motion-Control Levers

Adjusting the Height

You can adjust the motion-control levers higher or lower for maximum comfort (Figure 12).

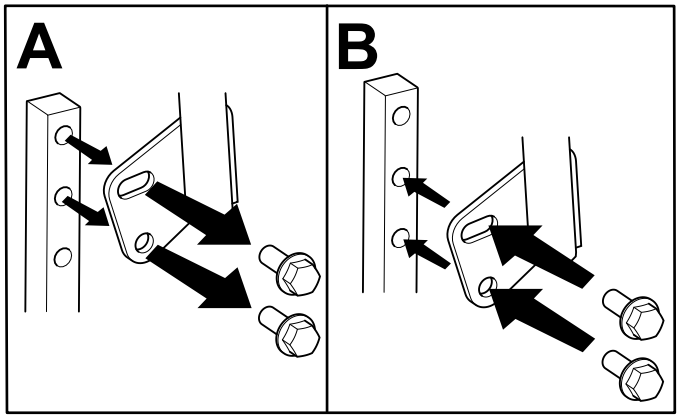

g333847

Figure 12

Adjusting the Tilt

You can adjust the motion-control levers forward or rearward for your comfort.

1. Loosen the upper bolt holding the control lever to the control-arm shaft.
2. Loosen the lower bolt just enough to pivot the control lever forward or rearward.

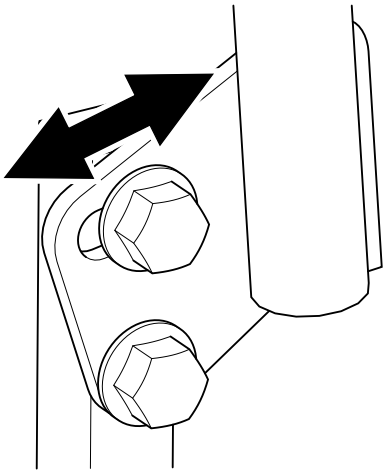

g333846

Figure 13

3. Tighten both bolts to secure the control lever in the new position.
4. Repeat the adjustment for the other control lever.

During Operation

During Operation Safety

General Safety

- The owner/operator can prevent and is responsible for accidents that may cause personal injury or property damage.
- Use your full attention while operating the machine. Do not engage in any activity that causes distractions; otherwise, injury or property damage may occur.
- Do not operate the machine while ill, tired, or under the influence of alcohol or drugs.
- Contacting the blade can result in serious personal injury. Shut off the engine, remove the key, and wait for all moving parts to stop before leaving the operating position. When you turn the key to the OFF position, the engine should shut off and the blade should stop. If not, stop using your machine immediately and contact an Authorized Service Dealer.
- Operate the machine only in good visibility and appropriate weather conditions. Do not operate the machine when there is the risk of lightning.
- Keep your hands and feet away from the cutting units. Keep clear of the discharge opening.
- Do not mow with the discharge deflector raised, removed, or altered unless there is a grass-collection system or mulch kit in place and working properly.
- Do not mow in reverse unless it is absolutely necessary. Always look down and behind you before moving the machine in reverse.
- Use extreme care when approaching blind corners, shrubs, trees, or other objects that may block your view.
- Stop the blades whenever you are not mowing.
- If the machine strikes an object or starts to vibrate, immediately shut off the engine, remove the key (if equipped), and wait for all moving parts to stop before examining the machine for damage. Make all necessary repairs before resuming operation.
- Slow down and use caution when making turns and crossing roads and sidewalks with the machine. Always yield the right-of-way.
- Before you leave the operating position, do the following:
  - Park the machine on a level surface.
  - Disengage the power takeoff and lower the attachments.
  - Engage the parking brake.

  - Shut off the engine and remove the key.
  - Wait for all moving parts to stop.
- Operate the engine only in well-ventilated areas. Exhaust gases contain carbon monoxide, which is lethal if inhaled.
- Never leave a running machine unattended.
- Attach towed equipment to the machine only at the hitch point.
- Do not operate the machine unless all guards and safety devices, such as the deflectors and the entire grass catcher, are in place and functioning properly. Replace worn or deteriorated parts when necessary.
- Use only accessories and attachments approved by Toro.
- This machine produces sound levels in excess of 85 dBA at the operator's ear and can cause hearing loss through extended periods of exposure.

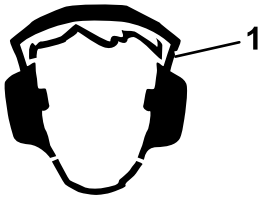

g229846

Figure 14

1. Wear hearing protection.

- Clean grass and debris from the cutting unit, drives, muffler, and engine to help prevent fires.
- Start the engine with your feet well away from the blades.
- Be aware of the mower discharge path and direct the discharge away from others. Avoid discharging material against a wall or obstruction because the material may ricochet back toward you.
- Stop the blades, slow down the machine, and use caution when crossing surfaces other than grass or when transporting the machine to and from the operating area.
- Do not change the engine governor speed or overspeed the engine.
- Children are often attracted to the machine and the mowing activity. Never assume that children will remain where you last saw them.
- Keep children out of the operating area and under the watchful care of a responsible adult other than the operator.
- Be alert and shut off the machine if children enter the operating area.
- Before backing up or turning the machine, look down and all around for small children.
- Do not carry children on the machine, even when the blades are not moving. Children could fall off and be seriously injured or prevent you from safely operating the machine. Children who have been given rides in the past could appear in the operating area without warning and be run over or backed over by the machine.

Slope Safety

- Slopes are a major factor related to loss of control and rollover accidents, which can result in severe injury or death. The operator is responsible for safe slope operation. Operating the machine on any slope requires extra caution. Before using the machine on a slope, do the following:
  - Review and understand the slope instructions in the manual and on the machine.
  - Use an angle indicator to determine the approximate slope angle of the area.
  - Never operate on slopes greater than 15°.
  - Evaluate the site conditions of the day to determine if the slope is safe for machine operation. Use common sense and good judgment when performing this evaluation. Changes in the terrain, such as moisture, can quickly affect the operation of the machine on a slope.
- Identify hazards at the base of the slope. Do not operate the machine near drop-offs, ditches, embankments, water, or other hazards. The machine could suddenly roll over if a wheel goes over the edge or the edge collapses. Keep a safe distance (twice the width of the machine) between the machine and any hazard. Use a walk-behind machine or a hand trimmer to mow the grass in these areas.
- Avoid starting, stopping, or turning the machine on slopes. Avoid making sudden changes in speed or direction; turn slowly and gradually.
- Do not operate a machine under any conditions where traction, steering, or stability is in question. Be aware that operating the machine on wet grass, across slopes, or downhill may cause the machine to lose traction. Loss of traction to the drive wheels may result in sliding and a loss of braking and steering. The machine can slide even if the drive wheels are stopped.
- Remove or mark obstacles such as ditches, holes, ruts, bumps, rocks, or other hidden hazards. Tall grass can hide obstacles. Uneven terrain could overturn the machine.

- Use extra care while operating with accessories or attachments, such as grass-collection systems. These can change the stability of the machine and cause a loss of control. Follow directions for counterweights.
- If possible, keep the deck lowered to the ground while operating on slopes. Raising the deck while operating on slopes can cause the machine to become unstable.

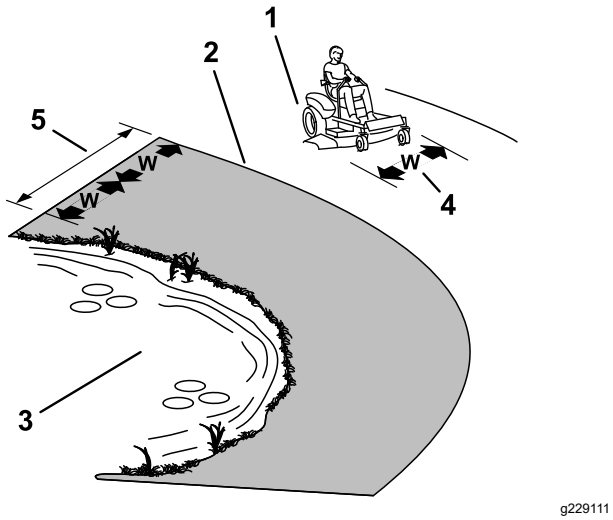

g229111

Figure 15

1. Safe Zone—use the machine here on slopes less than 15° or flat areas.
2. Danger Zone—use a walk-behind mower and/or a hand trimmer on slopes greater than 15° and near drop-offs or water.
3. Water
4. W = Width of the machine
5. Keep a safe distance (twice the width of the machine) between the machine and any hazard.

Towing Safety

- Do not attach towed equipment except at the hitch point.
- Do not use the machine as a towing vehicle unless it has a hitch installed.
- Do not exceed the weight limits for towed equipment and towing on slopes. The towed weight must not exceed the weight of the machine and operator.
- Never allow children or others near the towed equipment.
- On slopes, the weight of the towed equipment may cause loss of traction, increased risk of rollover, and loss of control. Reduce the towed weight and slow down.
- The stopping distance may increase with the weight of a towed load. Travel slowly and allow extra distance to stop.
- Make wide turns to keep the attachment clear of the machine.

Operating the Mower Blade-Control Switch (PTO)

The blade-control switch (PTO) starts and stops the mower blades and any powered attachments.

Engaging the Blade-Control Switch (PTO)

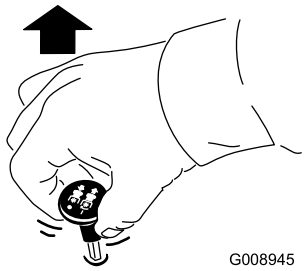

G008945

g008945

Figure 16

Note: Always engage the blades with the throttle in the FAST position (Figure 17).

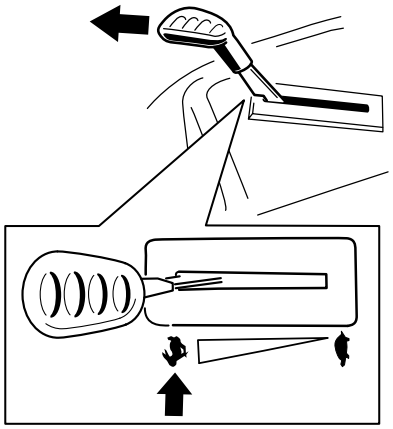

g295538

Figure 17

Disengaging the Blade-Control Switch (PTO)

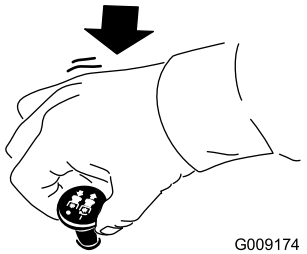

G009174

g009174

Figure 18

Operating the Throttle

You can move the throttle control between the FAST and SLOW positions (Figure 19).

Always use the FAST position when engaging the PTO.

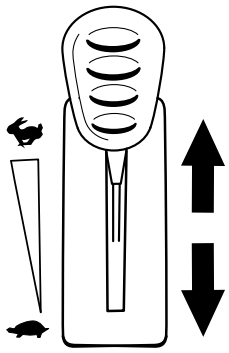

g295539

Figure 19

Operating the Choke

Use the choke to start a cold engine.

1. Pull up the choke knob to engage the choke before using the key switch (Figure 20).

   Note: Ensure that you fully engage the choke. You may need to hold the knob up when you use the key switch.

2. Push down the choke to disengage the choke after the engine has started (Figure 20).

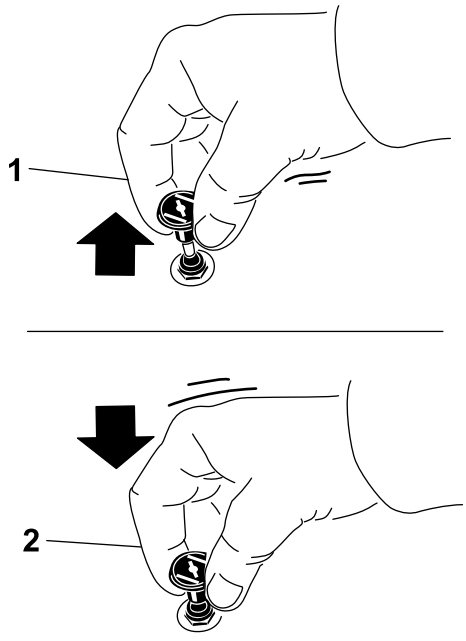

g295540

Figure 20

1. ON position
2. OFF position

Starting the Engine

Note: A warm or hot engine may not require choking.

Important: **Do not engage the starter for more than 5 seconds at a time. Engaging the starter motor for more than 5 seconds can damage the starter motor. If the engine fails to start, wait 10 seconds before operating the engine starter again.**

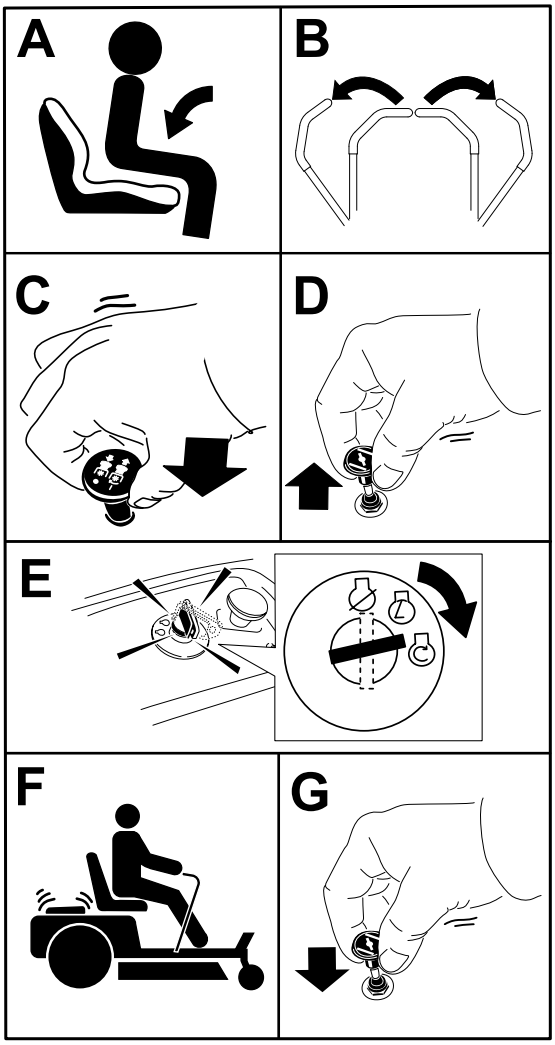

g295541

Figure 21

Shutting Off the Engine

1. Disengage the blades by moving the blade-control switch to the OFF position (Figure 18).
2. Move the motion-control levers outward to the PARK position.
3. Move the throttle lever to the SLOW position and let the engine idle for 1 minute.
4. Turn the key to the OFF position and remove the key.

⚠ CAUTION

Children or bystanders may be injured if they move or attempt to operate the machine while it is unattended.

Always remove the key and engage the parking brake when leaving the machine unattended.

Using the Motion-Control Levers

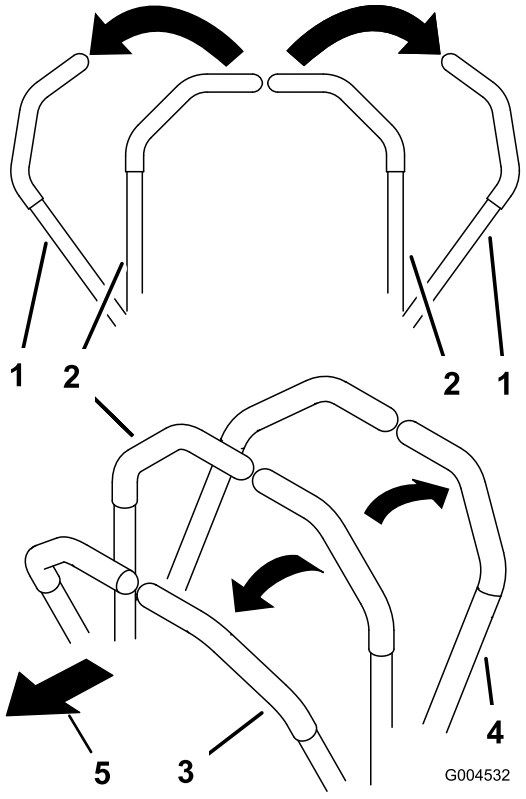

g004532

Figure 22

1. Motion-control lever—PARK position
2. Center, unlocked position
3. Forward
4. Backward
5. Front of machine

Driving the Machine

The drive wheels turn independently, powered by hydraulic motors on each axle. You can turn 1 side in reverse while you turn the other forward, causing the machine to spin rather than turn. This greatly improves the machine maneuverability but may require some time for you to adapt to how it moves.

The throttle control regulates the engine speed as measured in rpm (revolutions per minute). Place the throttle control in the FAST position for best performance. Always operate in the full throttle position when mowing.

⚠ WARNING

The machine can spin very rapidly. You may lose control of the machine and cause personal injury or damage to the machine.

- **Use caution when making turns.**
- **Slow the machine down before making sharp turns.**

Driving Forward

Note: Always use caution when turning.

1. Move the levers to the center, unlocked position.
2. To go forward, slowly push the motion-control levers forward (Figure 23).

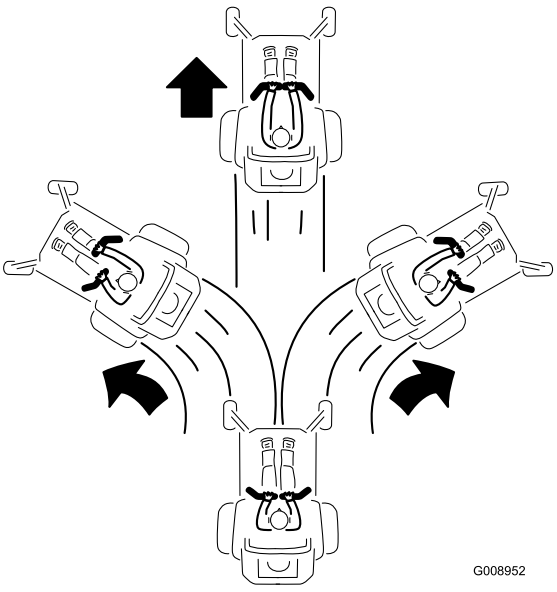

g008952

Figure 23

Driving Backward

Note: Always use caution when backing up and turning.

1. Move the levers to the center, unlocked position.
2. To go backward, slowly pull the motion-control levers rearward (Figure 24).

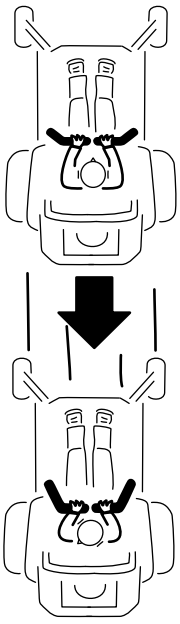

G008953

g008953

Figure 24

Using the Smart Speed™ Control System

The Smart Speed ™ Control-System lever, located below the operating position (Figure 25), gives the operator a choice to drive the machine at 3 ground speed ranges—trim, tow, and mow.

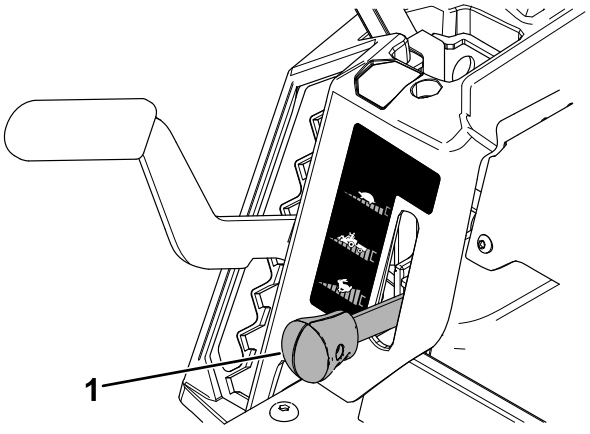

g293338

Figure 25

1. Smart-speed lever

To change speeds, do the following:

1. Move the motion-control levers to neutral and outward to the PARK position.
2. Disengage the blade-control switch.
3. Adjust the lever to the desired position.

The following are only recommendations for use. Adjustments vary by grass type, moisture content, and the height of the grass.

Suggested uses:	Trim	Tow	Mow
Parking	X		
Heavy, wet grass	X		
Training	X		
Trimming grass	X		
Bagging		X	
Mulching		X	
Towing attachments		X	
Normal mowing			X
Moving the machine			X

Trim

This is the lowest speed. The suggested uses for this speed are as follows:

- Parking
- Heavy, wet grass mowing conditions
- Training
- Trimming grass

Tow

This is the medium speed. The suggested uses for this speed are as follows:

- Bagging
- Mulching
- Towing attachments

Mow

This is the fastest speed. The suggested uses for this speed are as follows:

- Normal mowing
- Moving the machine

Using the Side Discharge

The mower has a hinged grass deflector that disperses clippings to the side and down toward the turf.

⚠ DANGER

Without a grass deflector, discharge cover, or a complete grass-catcher assembly mounted in place, you and others are exposed to blade contact and thrown debris. Contact with rotating mower blade(s) and thrown debris will cause injury or death.

- **Never remove the grass deflector from the mower deck because the grass deflector routes material down toward the turf. If the grass deflector is ever damaged, replace it immediately.**
- **Never put your hands or feet under the mower deck.**
- **Never try to clear the discharge area or mower blades unless you move the blade-control switch (PTO) to the OFF position, rotate the key switch to the OFF position, and remove the key from the key switch.**
- **Make sure that the grass deflector is in the down position.**

Adjusting the Height of Cut

Note: The transport position is the highest height-of-cut position or cutting height at 114 mm (4-1/2 inches) as shown in Figure 26.

You can adjust the height of cut from 38 to 114 mm (1-1/2 to 4-1/2 inches) in 13 mm (1/2 inch) increments. The height of cut is controlled by the lever located to the right of the operating position (Figure 26).

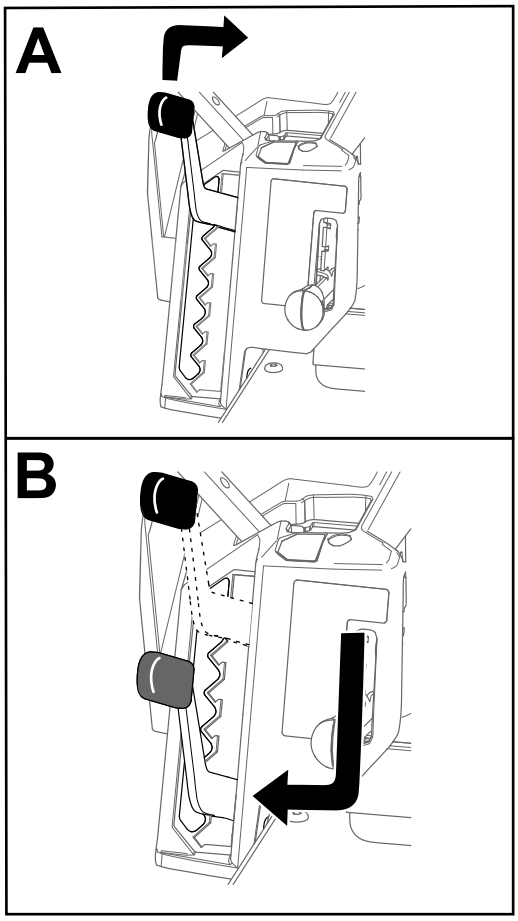

g296586

Figure 26

Adjusting the Anti-Scalp Rollers

Whenever you change the height of cut, adjust the height of the anti-scalp rollers.

Note: Adjust the anti-scalp rollers so that the rollers do not touch the ground in normal, flat mowing areas.

1. Park the machine on a level surface, disengage the blade-control switch, and move the motion-control levers outward to the PARK position.
2. Shut off the engine, remove the key, and wait for all moving parts to stop before leaving the operating position.
3. Adjust the anti-scalp rollers (Figure 27) to match the closest height-of-cut position.

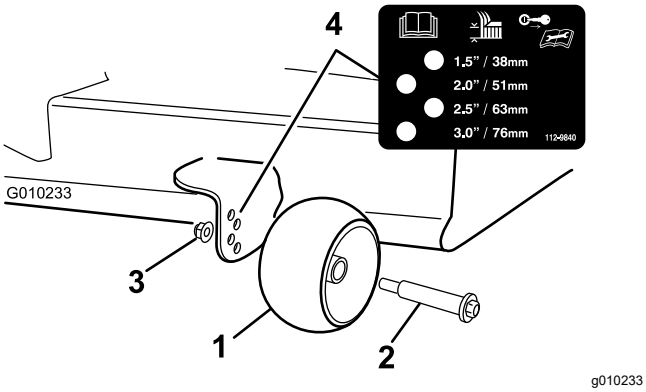

Figure 27

1. Anti-scalp roller
2. Bolt
3. Flange nut
4. Hole spacing

Operating Tips

Using the Fast Throttle Setting

For best mowing and maximum air circulation, operate the engine at the FAST position. Air is required to thoroughly cut grass clippings, so do not set the height-of-cut so low as to totally surround the mower deck in uncut grass. Always try to have 1 side of the mower deck free from uncut grass, which allows air to be drawn into the mower deck.

Cutting a Lawn for the First Time

Cut grass slightly longer than normal to ensure that the cutting height of the mower deck does not scalp any uneven ground. However, the cutting height used in the past is generally the best one to use. When cutting grass longer than 15 cm (6 inches) tall, you may want to cut the lawn twice to ensure an acceptable quality of cut.

Cutting a Third of the Grass Blade

It is best to cut only about a third of the grass blade. Cutting more than that is not recommended unless grass is sparse, or it is late fall when grass grows more slowly.

Alternating the Mowing Direction

Alternate the mowing direction to keep the grass standing straight. This also helps disperse clippings, which enhances decomposition and fertilization.

Mowing at Correct Intervals

Grass grows at different rates at different times of the year. To maintain the same cutting height, mow more often in early spring. As the grass growth rate slows in mid summer, mow less frequently. If you cannot mow for an extended period, first mow at a high cutting height, then mow again 2 days later at a lower height setting.

Using a Slower Cutting Speed

To improve cut quality, use a slower ground speed in certain conditions.

Avoiding Cutting Too Low

When mowing uneven turf, raise the cutting height to avoid scalping the turf.

Stopping the Machine

If you must stop the forward motion of the machine while mowing, a clump of grass clippings may

drop onto your lawn. To avoid this, move onto a previously cut area with the blades engaged or you can disengage the mower deck while moving forward.

Keeping the Underside of the Mower Deck Clean

Clean clippings and dirt from the underside of the mower deck after each use. If grass and dirt build up inside the mower deck, cutting quality will eventually become unsatisfactory.

Maintaining the Blade(s)

Maintain a sharp blade throughout the cutting season because a sharp blade cuts cleanly without tearing or shredding the grass blades. Tearing and shredding turns grass brown at the edges, which slows growth and increases the chance of disease. Check the mower blades after each use for sharpness, and for any wear or damage. File down any nicks and sharpen the blades as necessary. If a blade is damaged or worn, replace it immediately with a genuine Toro replacement blade.

After Operation

After Operation Safety

General Safety

- Shut off the engine, remove the key, and wait for all moving parts to stop before leaving the operator's position. Allow the machine to cool before servicing, adjusting, fueling, cleaning, or storing it.
- Clean grass and debris from the cutting unit, muffler, drives, grass catcher, and engine compartment to help prevent fires. Clean up oil or fuel spills.
- Remove the key before storing or transporting the machine.

Cleaning the Machine

Service Interval: After each use

Important: **You can wash the machine with a mild detergent and water. Do not pressure wash the machine. Avoid excessive use of water, especially near the control panel, under the seat, around the engine, hydraulic pumps, and motors.**

1. Park the machine on a level surface, disengage the blade-control switch, and move the motion-control levers outward to the PARK position.
2. Shut off the engine and wait for all moving parts to stop before leaving the operating position.
3. Clean grass and debris from cutting unit, muffler, drives, grass catcher, and engine. Use compressed air when possible.

   Note: Refer to Washing the Underside of the Mower Deck (page 47) for information on using the deck-washout fitting.

Pushing the Machine by Hand

1. Park the machine on a level surface, disengage the blade-control switch, and move the motion-control levers outward to the PARK position.
2. Shut off the engine and wait for all moving parts to stop before leaving the operating position.
3. Locate the bypass levers on the frame on both sides of the engine.
4. Move both bypass levers forward through the slotted hole and down to lock them in place (Figure 28).

⚠ WARNING

Contact with hot surfaces may cause personal injury.

Keep your hands, feet, face, clothing and other body parts away the engine, muffler and other hot surfaces.

⚠ WARNING

The machine could unintentionally move while the bypass levers are locked forward in the slot and injure you or bystanders.

Lock the bypass levers rearward after moving the machine.

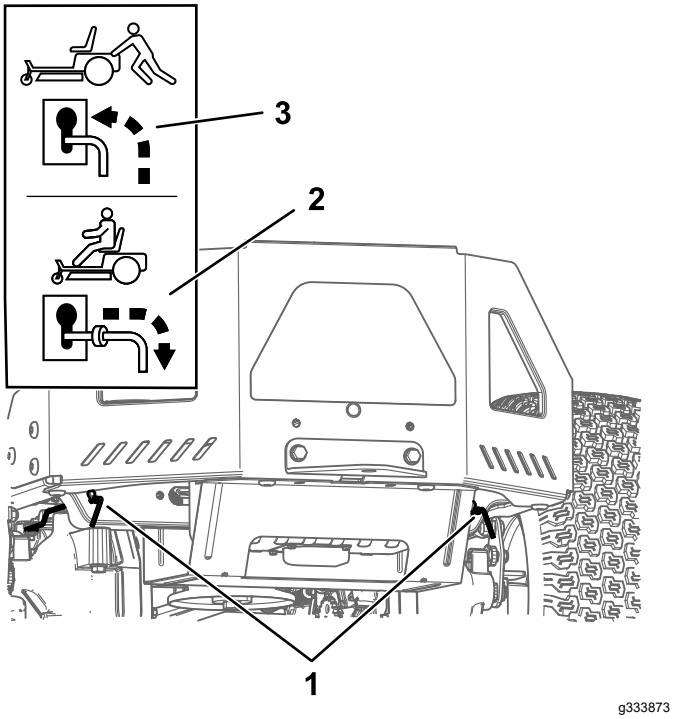

Figure 28

1. Bypass-lever locations
2. Lever position for operating the machine
3. Lever position for pushing the machine

5. Disengage the parking brake by moving both motion-control levers to the center, unlocked position.

   Note: Do not start the machine.

6. Move the machine as required.

   Important: **Always push the machine by hand. Do not tow the machine, because towing may damage it.**

7. Move the motion-control levers outward to the PARK position.
8. Move both bypass levers rearward and down through the slotted hole to lock them in place.

Transporting the Machine

Use a heavy-duty trailer or truck to transport the machine. Use a full-width ramp. Ensure that the trailer or truck has all the necessary brakes, lighting, and marking as required by law. Please carefully read all the safety instructions. Knowing this information could help you or bystanders avoid injury. Refer to your local ordinances for trailer and tie-down requirements.

⚠ WARNING

Driving on the street or roadway without turn signals, lights, reflective markings, or a slow-moving-vehicle emblem is dangerous and can lead to accidents, causing personal injury.

Do not drive the machine on a public street or roadway.

Selecting a Trailer

⚠ WARNING

Loading a machine onto a trailer or truck increases the possibility of tip-over and could cause serious injury or death (Figure 29).

- **Use only a full-width ramp; do not use individual ramps for each side of the machine.**
- **Do not exceed a 15-degree angle between the ramp and the ground or between the ramp and the trailer or truck.**
- **Ensure that the length of the ramp is at least 4 times as long as the height of the trailer or truck bed to the ground. This ensures that the ramp angle does not exceed 15 degrees on flat ground.**

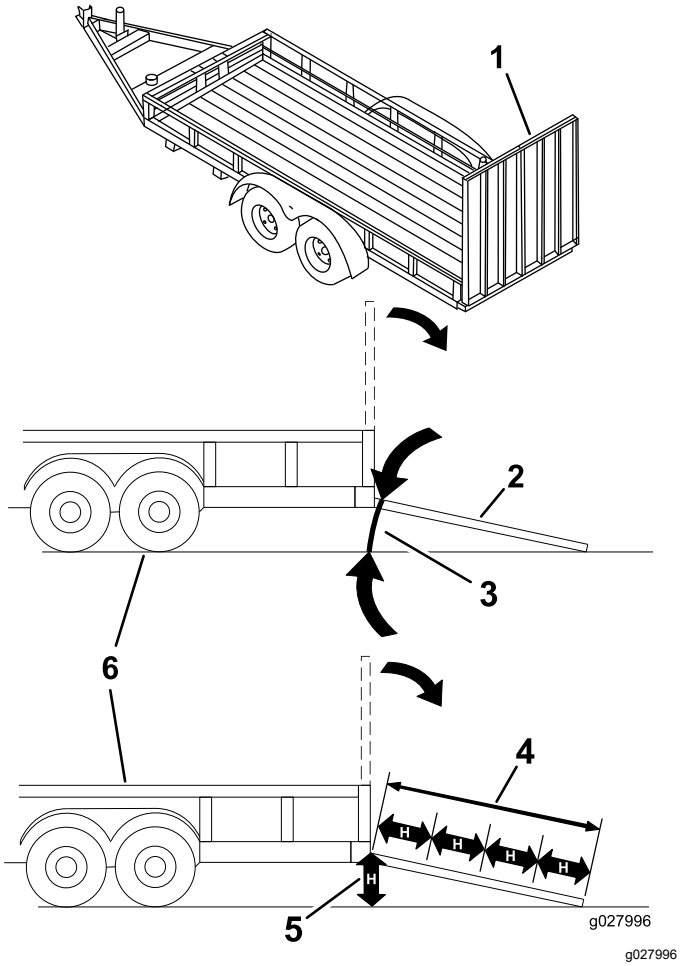

Figure 29

1. Full-width ramp in stowed position
2. Side view of full-width ramp in loading position
3. Not greater than 15 degrees
4. Ramp is at least 4 times as long as the height of the trailer or truck bed to the ground
5. H=height of the trailer or truck bed to the ground
6. Trailer

Loading the Machine

⚠ WARNING

Loading a machine onto a trailer or truck increases the possibility of tip-over and could cause serious injury or death.

- **Use extreme caution when operating a machine on a ramp.**
- **Back the machine up the ramp and drive it forward down the ramp.**
- **Avoid sudden acceleration or deceleration while driving the machine on a ramp as this could cause a loss of control or a tip-over situation.**

1. If you are using a trailer, connect it to the towing vehicle and connect the safety chains.
2. If applicable, connect the trailer brakes and lights.
3. Lower the ramp, ensuring that the angle between the ramp and the ground does not exceed 15 degrees (Figure 29).
4. Back the machine up the ramp (Figure 30).

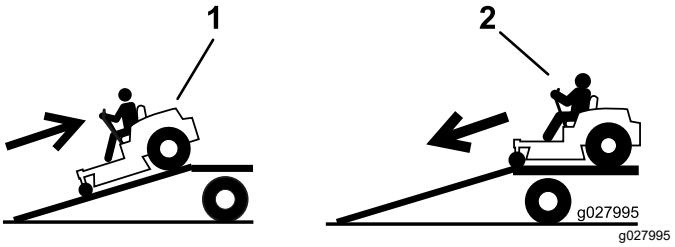

Figure 30

1. Back the machine up the ramp.
2. Drive the machine forward down the ramp.

5. Shut off the engine, remove the key, and move the motion-control levers outward to the PARK position.
6. Tie down the machine near the front caster wheels and the rear frame with straps, chains, cable, or ropes (Figure 31). Refer to local regulations for tie-down requirements.

   Note: Direct the straps down and away from the machine.

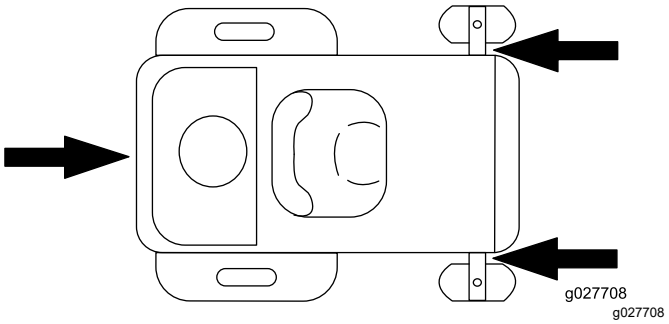

Figure 31

1. Tie-down points

Unloading the Machine

1. Lower the ramp, ensuring that the angle between the ramp and the ground does not exceed 15 degrees (Figure 29).
2. Drive the machine forward down the ramp (Figure 30).

Maintenance

Note: Determine the left and right sides of the machine from the normal operating position.

Maintenance Safety

- If you leave the key in the switch, someone could accidently start the engine and seriously injure you or other bystanders. Remove the key from the switch before you perform any maintenance.
- Before you leave the operator's position, do the following:
  - Park the machine on a level surface.
  - Disengage the drives.
  - Engage the parking brake.
  - Shut off the engine and remove the key.
  - Allow machine components to cool before performing maintenance.
- Do not allow untrained personnel to service the machine.
- Keep your hands and feet away from moving parts or hot surfaces. If possible, do not make adjustments with the engine running.
- Carefully release pressure from components with stored energy.
- Check the parking brake operation frequently. Adjust and service it as required.
- Never tamper with safety devices. Check their proper operation regularly.
- Clean grass and debris from the cutting unit, muffler, drives, grass catcher, and engine compartment to prevent fires.
- Clean up oil or fuel spills and remove fuel-soaked debris.
- Do not rely on hydraulic or mechanical jacks to support the machine; support the machine with jack stands whenever you raise the machine.
- Keep all parts in good working condition and all hardware tightened, especially the blade-attachment hardware. Replace all worn or damaged decals.
- Disconnect the cable from the negative terminal of the battery before repairing the machine.
- To ensure optimum performance, use only genuine Toro replacement parts and accessories. Replacement parts and accessories made by other manufacturers could be dangerous, and such use could void the product warranty.

Recommended Maintenance Schedule(s)

Maintenance Service Interval	Maintenance Procedure
After the first 8 hours	• Change the engine oil.
Before each use or daily	• Check the safety-interlock system. • Check the air cleaner for dirty, loose, or damaged parts. • Check the engine-oil level. • Clean the air intake screen. • Inspect the blades. • Inspect the grass deflector for damage.
After each use	• Clean grass and debris from the cutting unit, muffler, drives, grass catcher, and engine. • Clean the mower-deck housing.
Every 25 hours	• Grease the caster wheel bearings (more often in sandy soil conditions). • Check tire pressure. • Check the belts for wear or cracks.
Every 100 hours	• Change the engine oil (more often in dirty or dusty conditions). • Replace or clean and gap the spark plug. • Replace the in-line fuel filter.
Every 100 hours or yearly, whichever comes first	• Replace the paper air-cleaner element (more often in dirty or dusty conditions).
Every 200 hours	• Change the engine-oil filter (more often in dirty or dusty conditions).

Maintenance Service Interval	Maintenance Procedure
Every 300 hours	• Check and adjust the valve clearance. Contact an Authorized Service Dealer.
Before storage	• Charge the battery and disconnect the battery cables. • Perform all maintenance procedures listed above before storage. • Paint any chipped surfaces.

Important: **Refer to your engine owner's manual for additional maintenance procedures.**

⚠ CAUTION

If you leave the key in the switch, someone could accidently start the engine and seriously injure you or other bystanders.

Shut off the engine and remove the key from the switch before you perform any maintenance.

Pre-Maintenance Procedures

Raising the Machine

Use jackstands to support the machine when you raise it.

⚠ WARNING

Supporting the machine on the lower muffler shield (Figure 32) may damage the shield and cause the machine to fall, injuring you or bystanders.

Do not use the lower muffler shield to lift or support the machine.

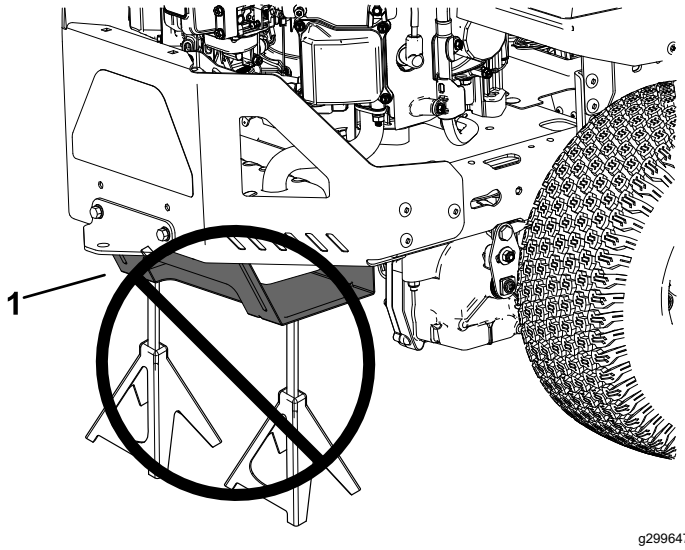

Figure 32

1. Lower muffler shield

Lubrication

Greasing the Bearings

Service Interval: Every 25 hours—Grease the caster wheel bearings (more often in sandy soil conditions).

Grease Type: No. 2 lithium grease

1. Park the machine on a level surface, disengage the blade-control switch, and move the motion-control levers outward to the PARK position.
2. Shut off the engine, remove the key, and wait for all moving parts to stop before leaving the operating position.
3. Clean the grease fittings (Figure 33) with a rag.

   Note: Scrape any paint off the front of the fitting(s).

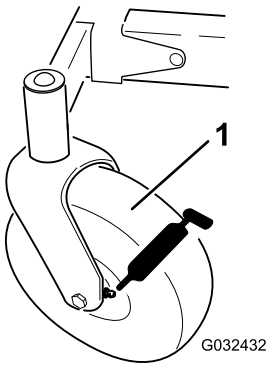

Figure 33

1. Front caster tire

4. Connect a grease gun to each fitting (Figure 33).
5. Pump grease into the fittings until grease begins to ooze out of the bearings.
6. Wipe up any excess grease.

Engine Maintenance

Engine Safety

- Keep your hands, feet, face, other body parts, and clothing away from the muffler and other hot surfaces. Allow engine components to cool before performing maintenance.
- Do not change the engine governor speed or overspeed the engine.

Servicing the Air Cleaner

Service Interval: Before each use or daily

Note: Service the air cleaner more frequently (every few hours) if operating conditions are extremely dusty or sandy.

Removing the Air-Cleaner Paper Element

1. Park the machine on a level surface, disengage the blade-control switch, and move the motion-control levers outward to the PARK position.
2. Shut off the engine, remove the key, and wait for all moving parts to stop before leaving the operating position.
3. Clean around the air-cleaner cover to prevent dirt from getting into the engine and causing damage.
4. Loosen the hose clamp and remove the paper element (Figure 34).

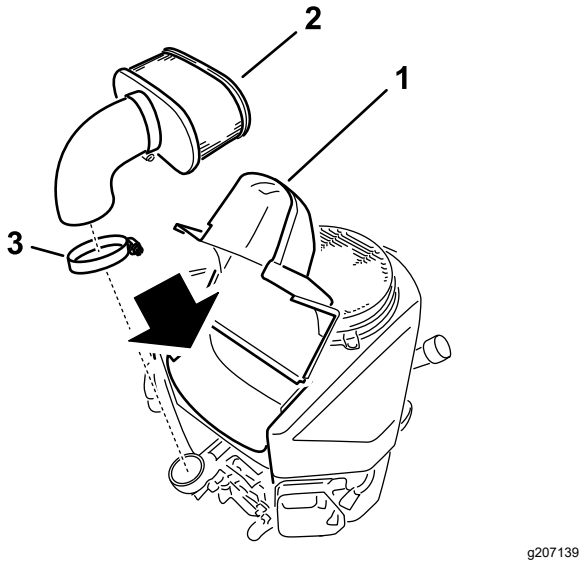

g207139

Figure 34

1. Cover
2. Paper element
3. Hose clamp

Servicing the Paper Air-Cleaner Element

Service Interval: Every 100 hours or yearly, whichever comes first—Replace the paper air-cleaner element (more often in dirty or dusty conditions).

1. Clean the paper element by tapping it gently to remove dust.

   Note: If it is very dirty, replace the paper element with a new one.
2. Inspect the element for tears, an oily film, or damage to the rubber seal.
3. Replace the paper element if it is damaged.

   Important: **Do not clean the paper filter.**

Servicing the Engine Oil

Engine-Oil Specifications

Oil Type: Detergent oil (API service SF, SG, SH, SJ, or SL)

Crankcase Capacity: 1.8 L (61 fl oz); without filter; 2.1 L (70 fl oz) with filter

Viscosity: See the table below.

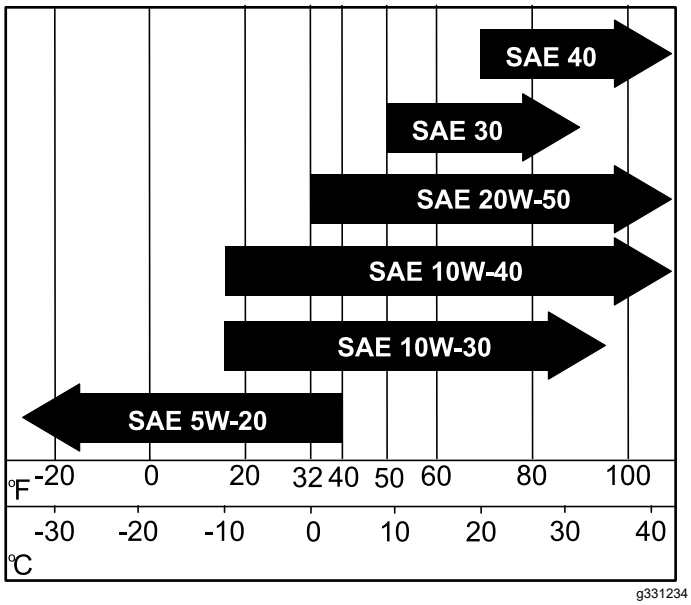

Figure 35

Checking the Engine-Oil Level

Service Interval: Before each use or daily

Note: Check the oil when the engine is cold.

Important: **If you overfill or underfill the engine crankcase with oil and run the engine, you may damage the engine.**

1. Park the machine on a level surface, disengage the blade-control switch, and move the motion-control levers outward to the PARK position.
2. Shut off the engine, remove the key, and wait for all moving parts to stop before leaving the operating position.

   Note: Ensure that the engine is cool so that the oil has had time to drain into the sump.
3. To keep dirt, grass clippings, etc., out of the engine, clean the area around the oil-fill cap and dipstick before removing it (Figure 36).

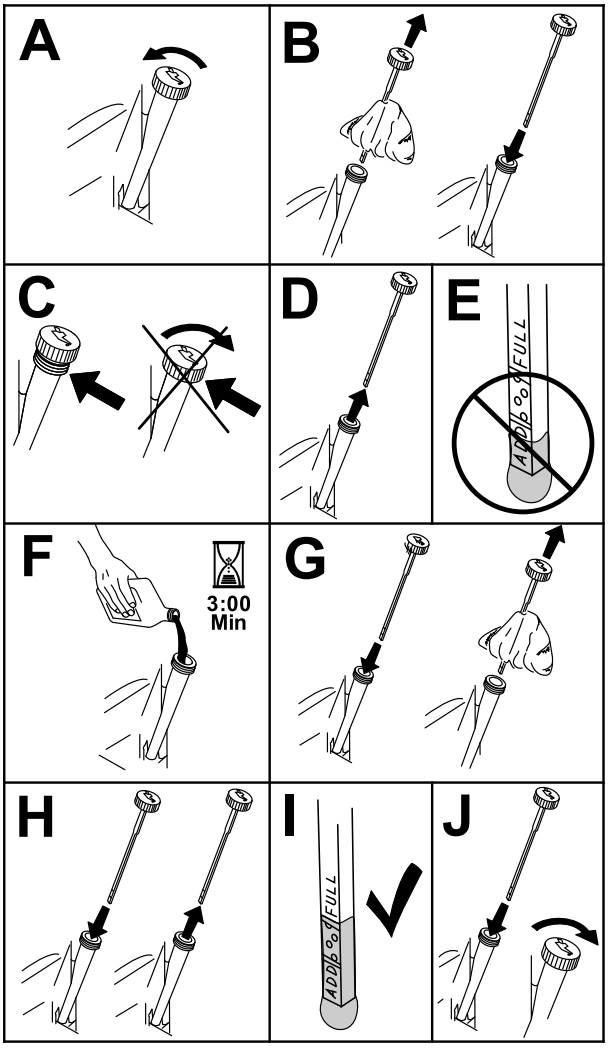

Figure 36

Changing the Engine Oil

Service Interval: After the first 8 hours—Change the engine oil.

Every 100 hours—Change the engine oil (more often in dirty or dusty conditions).

1. Park the machine so that the drain side is slightly lower than the opposite side to ensure that the oil drains completely.
2. Disengage the blade-control switch (PTO) and move the motion-control levers outward to the PARK position.
3. Shut off the engine, remove the key, and wait for all moving parts to stop before leaving the operating position.
4. Drain the oil from the engine (Figure 37).

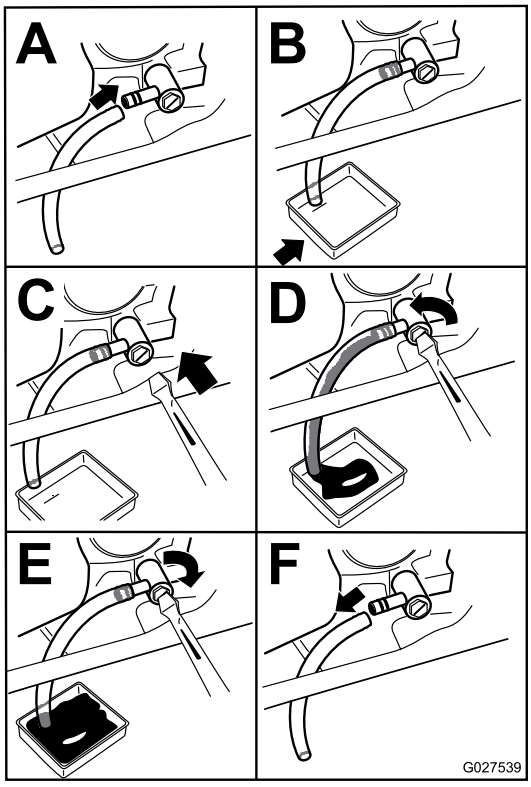

g027539

Figure 37

5. Slowly pour approximately 80% of the specified oil into the filler tube and slowly add the additional oil to bring it to the **Full** mark (Figure 38).

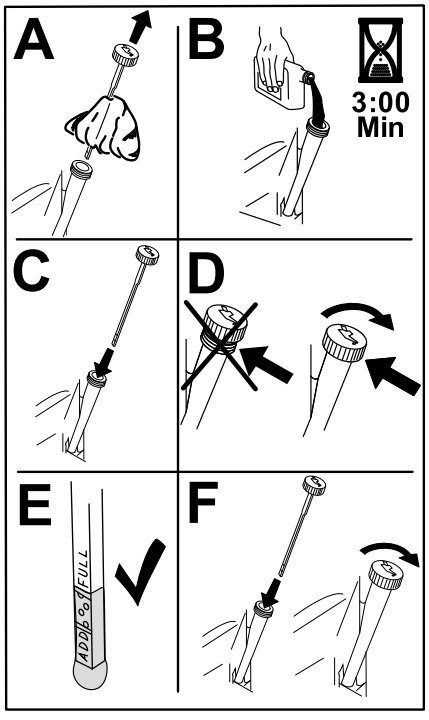

g235264

Figure 38

6. Dispose of the used oil at a recycling center.

Changing the Engine-Oil Filter

Service Interval: Every 200 hours—Change the engine-oil filter (more often in dirty or dusty conditions).

1. Drain the oil from the engine; refer to Changing the Engine Oil (page 32).
2. Change the engine-oil filter (Figure 39).

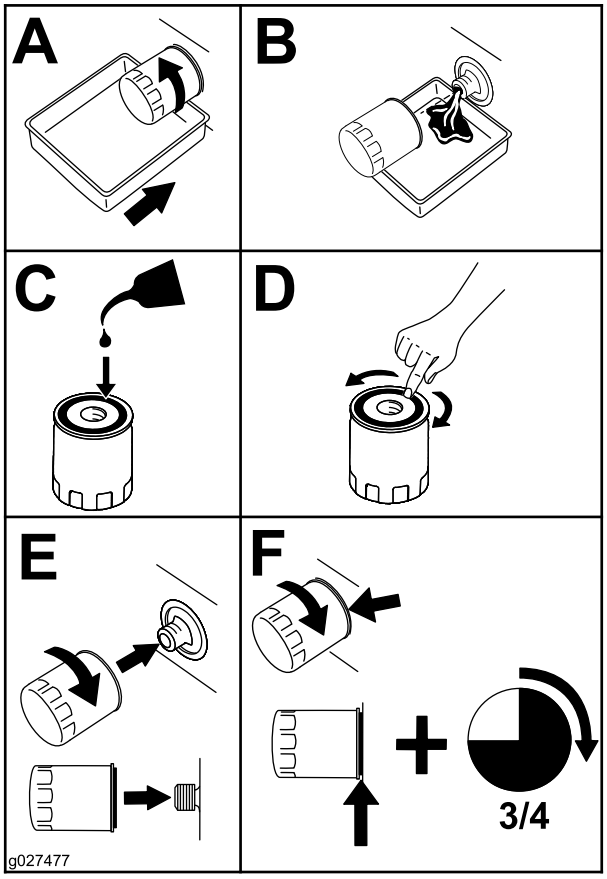

g027477

Figure 39

Note: Ensure that the oil-filter gasket touches the engine, and then turn the oil filter an extra 3/4 turn.

3. Fill the crankcase with the proper type of new oil (Figure 38).

Servicing the Spark Plug

Service Interval: Every 100 hours

Ensure that the air gap between the center and side electrodes is correct before installing the spark plug. Use a spark plug wrench for removing and installing the spark plug and a gapping tool or feeler gauge to check and adjust the air gap. Install a new spark plug if necessary.

Type of Spark Plug: NGK® BPR4ES

Air Gap: 0.75 mm (0.03 inch)

Removing the Spark Plug

1. Park the machine on a level surface, disengage the blade-control switch, and move the motion-control levers outward to the PARK position.
2. Shut off the engine, remove the key, and wait for all moving parts to stop before leaving the operating position.
3. Clean the area around the base of the plug to keep dirt and debris out of the engine.
4. Remove the spark plug (Figure 40).

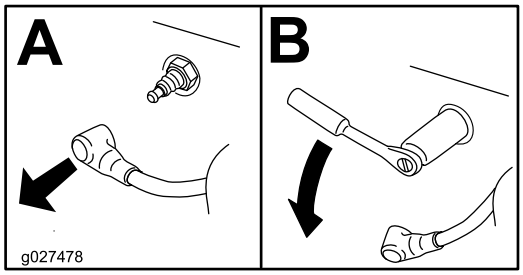

g027478

Figure 40

Checking the Spark Plug

Important: **Do not clean the spark plug(s). Always replace the spark plug(s) when it has a black coating, worn electrodes, an oily film, or cracks.**

If you see light brown or gray on the insulator, the engine is operating properly. A black coating on the insulator usually means the air cleaner is dirty.

Set the gap to 0.75 mm (0.03 inch).

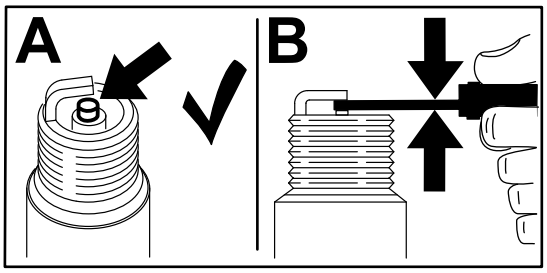

g206628

Figure 41

Installing the Spark Plug

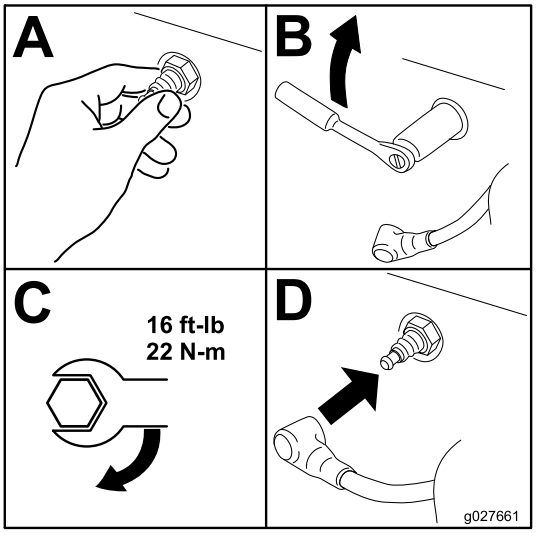

g027661

Figure 42

Cleaning the Cooling System

1. Park the machine on a level surface, disengage the blade-control switch, and move the motion-control levers outward to the PARK position.
2. Shut off the engine, remove the key, and wait for all moving parts to stop before leaving the operating position.
3. Remove the air filter from the engine.
4. Remove the engine shroud.
5. To prevent debris entering the air intake, install the air filter to the filter base.
6. Clean debris and grass from the parts.
7. Remove the air filter and install the engine shroud.
8. Install the air filter.

Fuel System Maintenance

⚠ DANGER

In certain conditions, fuel is extremely flammable and highly explosive. A fire or explosion from fuel can burn you and others and can damage property.

Refer to Fuel Safety (page 15) for a complete list of fuel related precautions.

Replacing the In-Line Fuel Filter

Service Interval: Every 100 hours—Replace the in-line fuel filter.

Never install a dirty filter after removing it from the fuel line.

1. Park the machine on a level surface, disengage the blade-control switch, and move the motion-control levers outward to the PARK position.
2. Shut off the engine, remove the key, and wait for all moving parts to stop before leaving the operating position. Allow the engine to cool.
3. Replace the filter (Figure 43).

   Note: Ensure that the flow-direction arrow on the replacement filter points toward the engine.

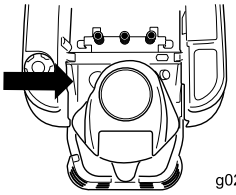

g027590

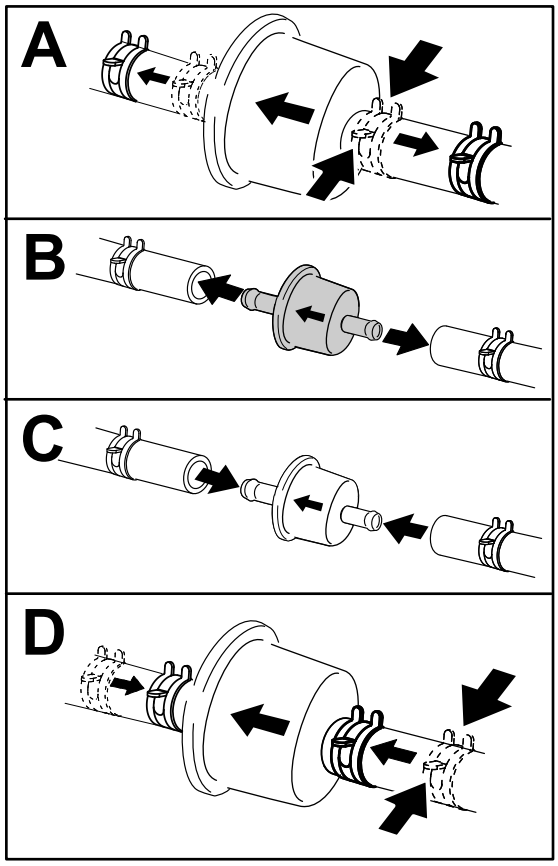

g333995

Figure 43

Electrical System Maintenance

Electrical System Safety

- Disconnect the cable from the negative terminal of the battery before repairing the machine.
- Charge the battery in an open, well-ventilated area, away from sparks and flames. Unplug the charger before connecting or disconnecting the battery. Wear protective clothing and use insulated tools.

Servicing the Battery

Removing the Battery

⚠ WARNING

Battery terminals or metal tools could short against metal machine components, causing sparks. Sparks can cause the battery gasses to explode, resulting in personal injury.

- **When removing or installing the battery, do not allow the battery terminals to touch any metal parts of the machine.**
- **Do not allow metal tools to short between the battery terminals and metal parts of the machine.**

1. Park the machine on a level surface, disengage the blade-control switch, and move the motion-control levers outward to the PARK position.
2. Shut off the engine, remove the key, and wait for all moving parts to stop before leaving the operating position.
3. Raise the seat to access the battery.
4. Disconnect the negative (black) ground cable from the battery post (Figure 44).

   Note: Retain all fasteners.

⚠ WARNING

Incorrectly removing the cables from battery could damage the machine and cables, causing sparks. Sparks can cause the battery gasses to explode, resulting in personal injury.

- **Always disconnect the negative (black) battery cable before disconnecting the positive (red) cable.**
- **Always connect the positive (red) battery cable before connecting the negative (black) cable.**

5. Slide the rubber cover off the positive (red) cable.
6. Disconnect the positive (red) cable from the battery post (Figure 44).

   Note: Retain all fasteners.
7. Remove the battery hold-down (Figure 44), and lift the battery from the battery tray.

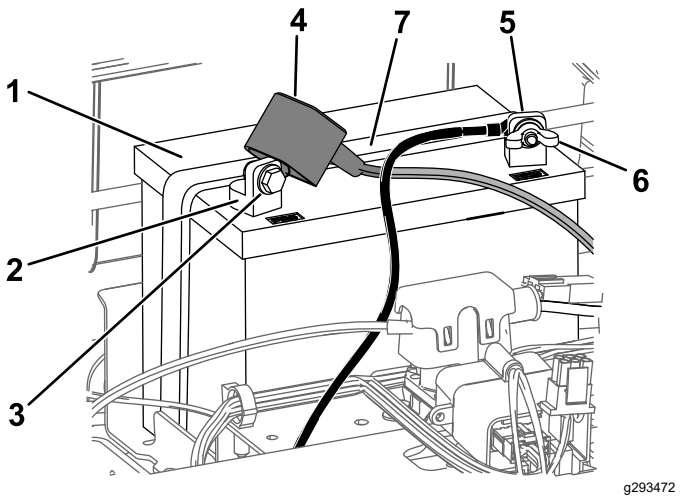

Figure 44

1. Battery
2. Positive (+) battery post
3. Bolt, washer, and nut
4. Terminal boot
5. Negative (–) battery post
6. Wing nut, washer, and bolt
7. Battery hold-down

Charging the Battery

Service Interval: Before storage—Charge the battery and disconnect the battery cables.

1. Remove the battery from the chassis; refer to Removing the Battery (page 36).
2. Charge the battery for a minimum of 1 hour at 6 to 10 A.

   Note: Do not overcharge the battery.
3. When the battery is fully charged, unplug the charger from the electrical outlet, then disconnect the charger leads from the battery posts (Figure 45).

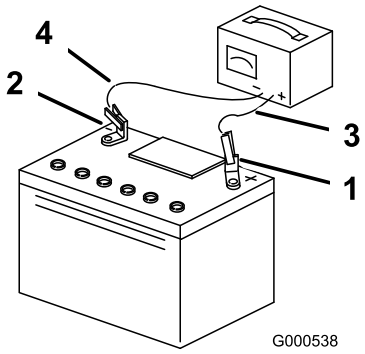

g000538

Figure 45

1. Positive (+) battery post
2. Negative (–) battery post
3. Red (+) charger lead
4. Black (–) charger lead

Installing the Battery

1. Position the battery in the tray (Figure 44).
2. Using the fasteners previously removed, install the positive (red) battery cable to the positive (+) battery terminal.
3. Using the fasteners previously removed, install the negative battery cable to the negative (-) battery terminal.
4. Slide the red terminal boot onto the positive (red) battery post.
5. Secure the battery with the hold-down (Figure 44).
6. Lower the seat.

Servicing the Fuses

The electrical system is protected by fuses. It requires no maintenance; however, if a fuse blows, check the component/circuit for a malfunction or short.

Fuse type:

- Main—F1 (25 A, blade-type)
- Charge Circuit—F2 (15 A, blade-type)

1. Park the machine on a level surface, disengage the blade-control switch, and move the motion-control levers outward to the PARK position.
2. Shut off the engine, remove the key, and wait for all moving parts to stop before leaving the operating position.
3. Raise the seat to access the fuses.
4. To replace a fuse, pull out the fuse to remove it (Figure 46).

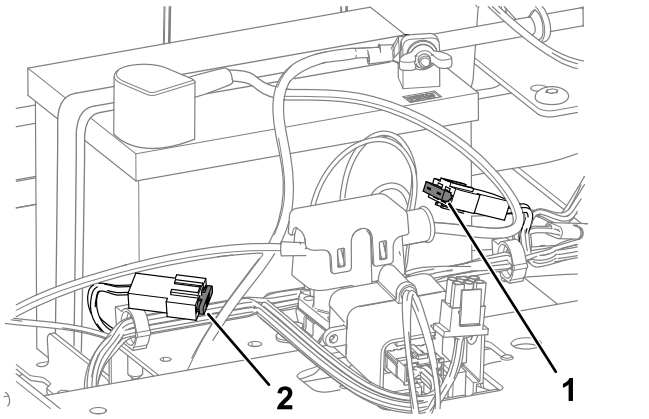

g293931

Figure 46

1. Charge circuit (15 A)
2. Main (25 A)

5. Lower the seat.

Drive System Maintenance

Checking the Tire Pressure

Service Interval: Every 25 hours—Check tire pressure.

Maintain the air pressure in the front and rear tires as specified. Uneven tire pressure can cause an uneven cut. Check the pressure at the valve stem (Figure 47). Check the tires when they are cold to get the most accurate pressure reading.

Inflate the front caster wheel tires to 206 kPa (30 psi) or the pressure indicated on the sidewall, whichever is lower.

Inflate the rear drive-wheel tires to 90 kPa (13 psi).

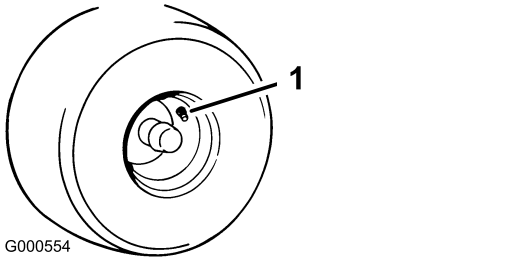

Figure 47

1. Valve stem

Adjusting the Tracking

When driving the machine forward full speed across a flat, level surface, if the machine pulls to 1 side, adjust the tracking.

If the machine pulls to the left, adjust the right motion-control lever; if the machine pulls to the right, adjust the left motion-control lever.

Note: You can adjust the tracking only for driving forward.

1. Park the machine on a level surface, disengage the blade-control switch, and move the motion-control levers outward to the PARK position.
2. Shut off the engine, remove the key, and wait for all moving parts to stop before leaving the operating position.
3. Locate the tracking-adjustment bolt near the motion-control lever on the particular side that needs adjusting (Figure 48).

   Note: Raise the seat for easier access to the adjustment bolt.
4. Rotate the bolt to decrease the speed for that particular wheel.

   Note: Rotate the bolt a small amount to make minor adjustments.

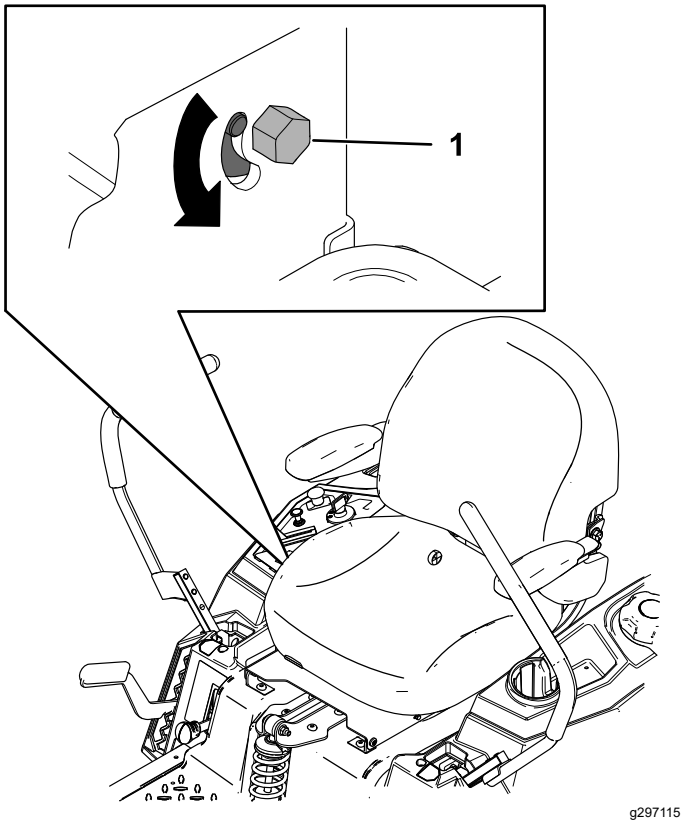

Figure 48

1. Bolt

5. Start the machine and drive forward across a flat, level surface with the motion-control levers fully forward to check if the machine tracks straight. Repeat the procedure as needed.

Belt Maintenance

Inspecting the Belts

Service Interval: Every 25 hours—Check the belts for wear or cracks.

Replace the belt if it is worn. The signs of a worn belt include squealing while the belt is rotating; the blades slipping while cutting grass; and frayed edges, burn marks, and cracks on the belt.

Replacing the Mower Belt

The signs of a worn belt include squealing while the belt is rotating, blades slipping while cutting grass, and frayed edges, burn marks, and cracks on the belt. Replace the mower belt if any of these conditions are evident.

1. Park the machine on a level surface, disengage the blade-control switch, and move the motion-control levers outward to the PARK position.
2. Shut off the engine, remove the key, and wait for all moving parts to stop before leaving the operating position.
3. Set the height of cut at the lowest cutting position (38 mm or 1-1/2 inches).
4. Remove the hairpin cotter and push in the tab on the cover to remove the pulley covers (Figure 49).

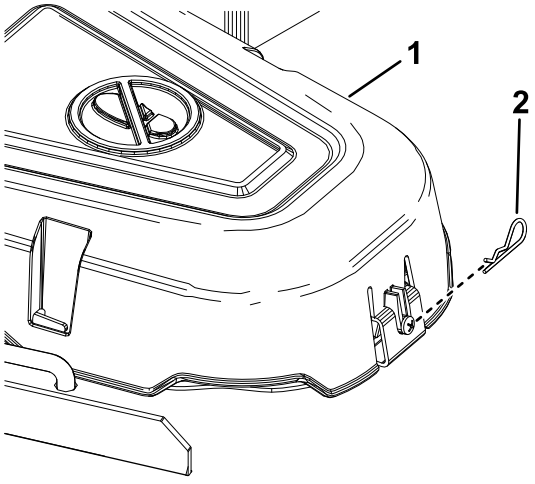

g331652

Figure 49

1. Cover
2. Hairpin cotter

5. Using a spring-removal tool (Toro Part No. 92-5771), remove the idler spring from the deck hook to remove tension on the idler pulley, and roll the belt off the pulleys (Figure 50).

⚠ WARNING

The spring is under tension when installed and can cause personal injury.

Be careful when removing the belt.

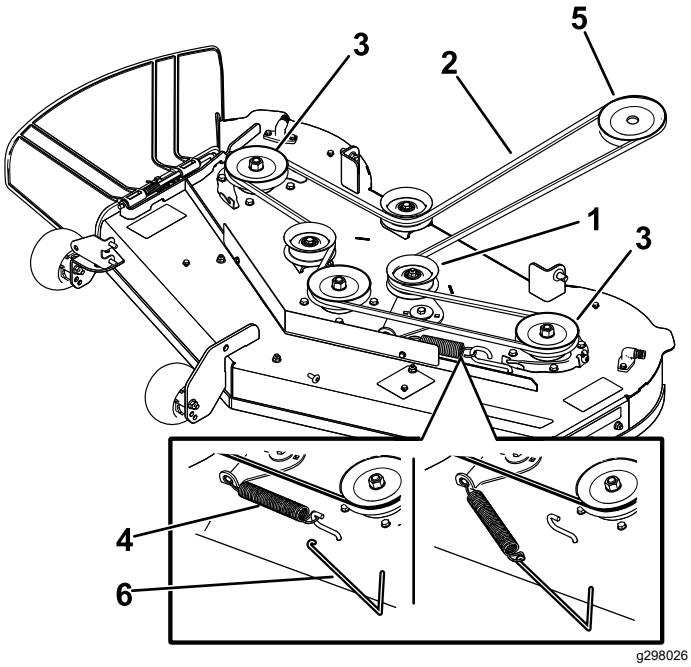

Figure 50

1. Idler pulley
2. Mower belt
3. Outside pulley
4. Spring
5. Engine pulley
6. Spring-removal tool

6. Route the new belt around the engine pulley and mower pulleys (Figure 50).
7. Using a spring-removal tool (Toro Part No. 92-5771), install the idler spring over the deck hook and place tension on the idler pulley and the mower belt (Figure 50).
8. Install the pulley covers.

Mower Maintenance

Blade Safety

- Inspect the blades periodically for wear or damage.
- Use care when checking the blades. Wrap the blades or wear gloves, and use caution when servicing the blades. Only replace or sharpen the blades; never straighten or weld them.
- On multi-bladed machines, take care as rotating one blade can cause other blades to rotate.
- Replace worn or damaged blades and bolts in sets to preserve balance.

Servicing the Cutting Blades

To ensure a superior quality of cut, keep the blades sharp. For convenient sharpening and replacement, keep extra blades on hand.

Before Inspecting or Servicing the Blades

1. Park the machine on a level surface, disengage the blade-control switch, and move the motion-control levers outward to the PARK position.
2. Shut off the engine, remove the key, and disconnect the spark-plug wires from the spark plugs.

Inspecting the Blades

Service Interval: Before each use or daily

1. Inspect the cutting edges (Figure 51).
2. If the edges are not sharp or have nicks, remove and sharpen the blade; refer to Sharpening the Blades (page 42).
3. Inspect the blades, especially in the curved area.
4. If you notice any cracks, wear, or a slot forming in this area, immediately install a new blade (Figure 51).

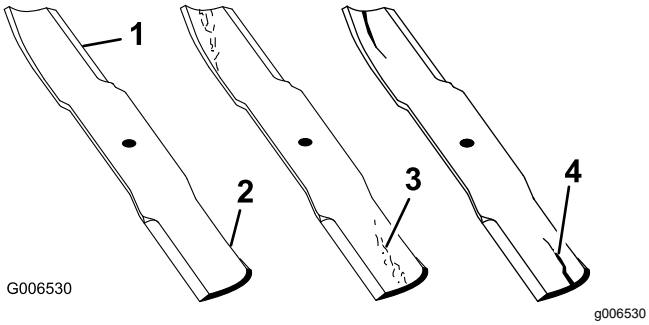

Figure 51

1. Cutting edge
2. Curved area
3. Wear/slot forming
4. Crack

Checking for Bent Blades

Note: The machine must be on a level surface for the following procedure.

1. Raise the mower deck to the highest height-of-cut position.
2. While wearing thickly padded gloves, or other adequate hand protection, slowly rotate the blade into a position that allows you to measure the distance between the cutting edge and the level surface the machine is on (Figure 52).

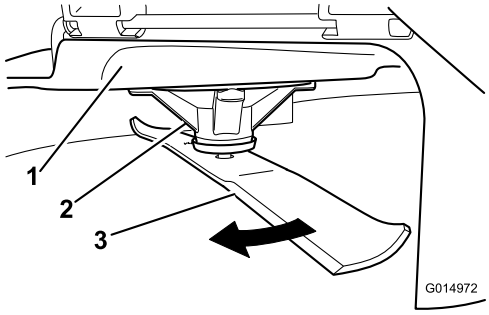

Figure 52

1. Deck
2. Spindle housing
3. Blade

3. Measure from the tip of the blade to the flat surface (Figure 53).

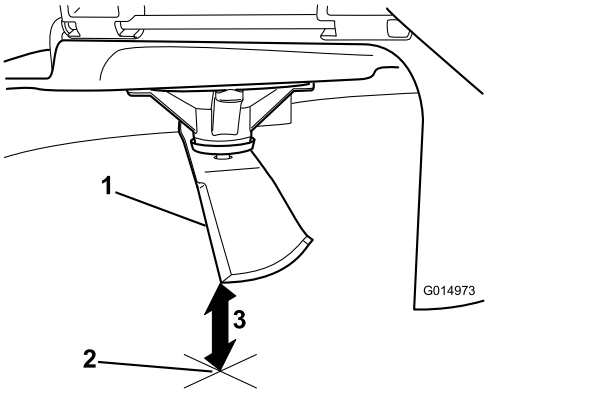

Figure 53

1. Blade (in position for measuring)
2. Level surface
3. Measured distance between blade and the surface (A)

4. Rotate the same blade 180 degrees so that the opposing cutting edge is now in the same position (Figure 54).

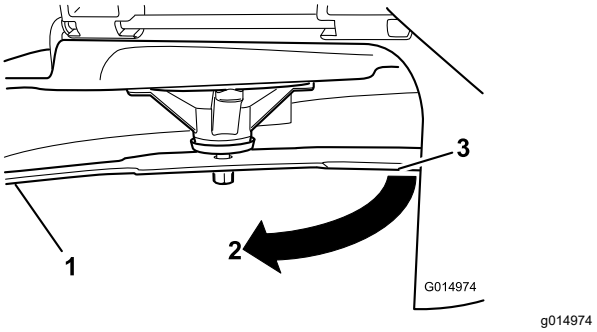

Figure 54

1. Blade (side previously measured)
2. Measurement (position used previously)
3. Opposing side of blade being moved into measurement position

5. Measure from the tip of the blade to the flat surface (Figure 55).

   Note: The variance should be no more than 3 mm (1/8 inch).

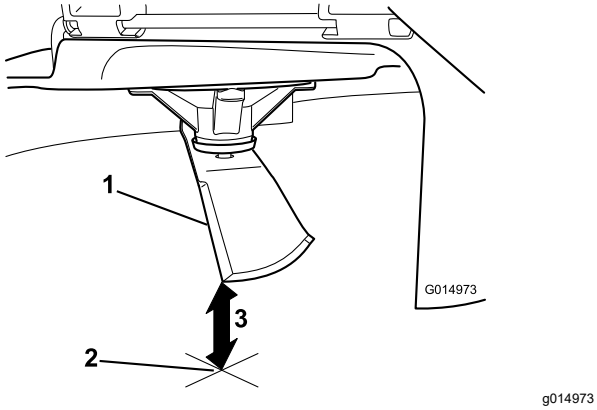

Figure 55

1. Opposite blade edge (in position for measuring)
2. Level surface
3. Second measured distance between blade and surface (B)

A. If the difference between A and B is greater than 3 mm (1/8 inch), replace the blade with a new blade; refer to Removing the Blades (page 42) and Installing the Blades (page 43).

Note: If a bent blade is replaced with a new blade, and the dimension obtained continues to exceed 3 mm (1/8 inch), the blade spindle could be bent. Contact an Authorized Service Dealer for service.

B. If the variance is within constraints, move to the next blade.

6. Repeat this procedure on each blade.

Removing the Blades

Replace the blades if they hit a solid object, or if the blade is out of balance or bent.

1. Hold the blade end using a rag or thickly padded glove.
2. Remove the blade bolt, curved washer, and blade from the spindle shaft (Figure 56).

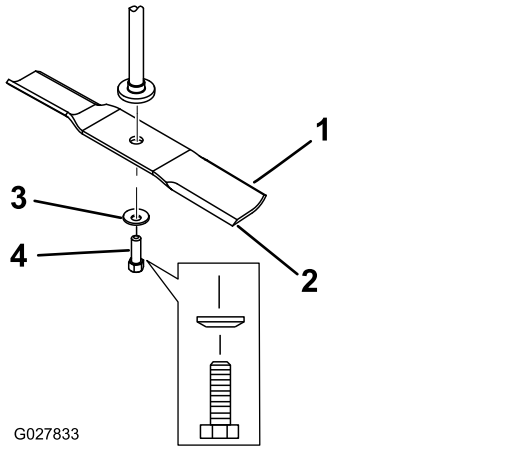

Figure 56

1. Sail area of the blade
2. Blade
3. Curved washer
4. Blade bolt

Sharpening the Blades

1. Use a file to sharpen the cutting edge at both ends of the blade (Figure 57).

Note: Maintain the original angle.

Note: The blade retains its balance if the same amount of material is removed from both cutting edges.

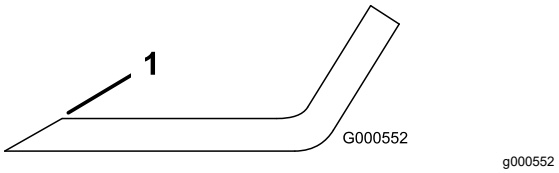

Figure 57

1. Sharpen at original angle.

2. Check the balance of the blade by putting it on a blade balancer (Figure 58).

Note: If the blade stays in a horizontal position, the blade is balanced and can be used.

Note: If the blade is not balanced, file some metal off the end of the sail area only (Figure 57).

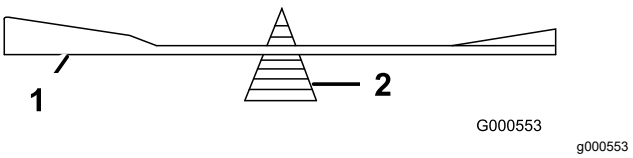

Figure 58

1. Blade
2. Balancer

3. Repeat this procedure until the blade is balanced.

Installing the Blades

1. Install the blade onto the spindle shaft (Figure 56).

   Important: **The curved part of the blade must be pointing upward toward the inside of the mower to ensure proper cutting.**

2. Install the curved washer (cupped side toward the blade) and the blade bolt (Figure 56).
3. Torque the blade bolt to 81 to 108 N·m (60 to 80 ft-lb).

Leveling the Mower Deck

Check to ensure that the mower deck is level any time you install the mower or when you see an uneven cut on your lawn.

Check the mower deck for bent blades prior to leveling, and remove and replace any bent blades; refer to the Servicing the Cutting Blades (page 40) before continuing.

Level the mower deck side-to-side first; then you can adjust the front-to-rear slope.

Requirements:

- The machine must be on a level surface.
- All tires must be properly inflated; refer to Checking the Tire Pressure (page 38).

Checking the Side-to-Side Level

1. Park the machine on a level surface, disengage the blade-control switch (PTO), and move the motion-control levers outward to the PARK position.
2. Shut off the engine, remove the key, and wait for all moving parts to stop before leaving the operating position.
3. Set the height of cut to 76 mm (3 inches).
4. Carefully rotate the blades side to side.
5. Measure between the outside cutting edges and the flat surface (Figure 59).

   Note: If both measurements are not within 5 mm (3/16 inch), an adjustment is required; refer to Leveling from Side to Side (page 44).

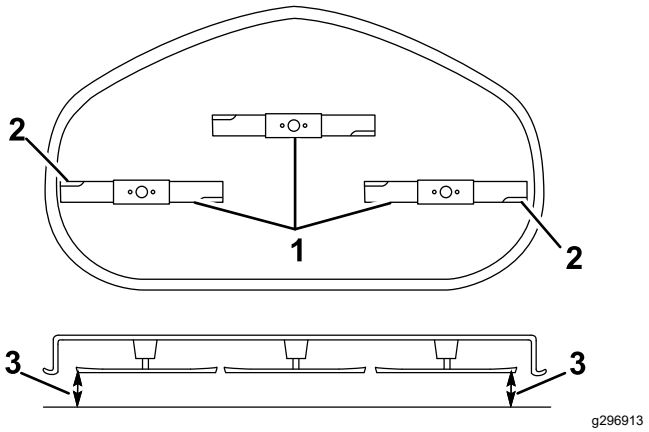

Figure 59

1. Blades side to side
2. Outside cutting edges
3. Measure from the tip of the blade to the flat surface here.

Checking the Front-to-Rear Blade Slope

Check the front-to-rear blade level any time you install the mower. If the front of the mower is more than 7.9 mm (5/16 inch) lower than the rear of the mower, adjust the blade level.

1. Park the machine on a level surface, disengage the blade-control switch (PTO), and move the motion-control levers outward to the PARK position.
2. Shut off the engine, remove the key, and wait for all moving parts to stop before leaving the operating position.
3. Set the height of cut to 76 mm (3 inches).
4. Carefully rotate the blades so they are facing front to rear (Figure 60).
5. Measure from the tip of the front blade to the flat surface and the tip of the rear blade to the flat surface (Figure 60).

   Note: If the front blade tip is not 1.6 to 7.9 mm (1/16 to 5/16 inch) lower than the rear blade tip, continue to the Checking the Front-to-Rear Blade Slope (page 43) procedure.

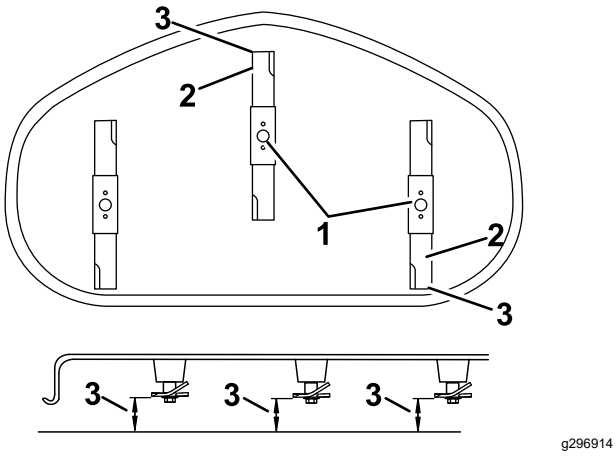

g296914

Figure 60

1. Blades front to rear
2. Outside cutting edges
3. Measure from the tip of the blade to the flat surface here.

Leveling from Side to Side

1. Move to the left side of the machine.
2. Set the anti-scalp rollers to the top holes or remove them completely for this procedure; refer to Adjusting the Anti-Scalp Rollers (page 25).
3. Set the height-of-cut lever to the 76 mm (3 inch) position; refer to Adjusting the Height of Cut (page 24).
4. Place 2 blocks, each having a thickness of 6.6 cm (2-5/8 inches), under each side of the front edge of the deck but not under the anti-scalp roller brackets (Figure 61).
5. Place 2 blocks, each having a thickness of 7.3 cm (2-7/8 inches), under the rear edge of the cutting deck skirt, 1 on each side of the cutting deck (Figure 61).

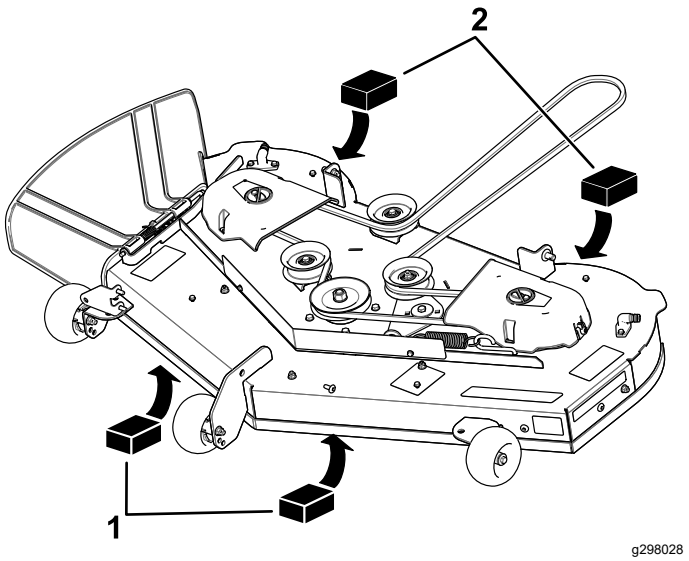

g298028

Figure 61

1. Wood block—6.6 cm (2-5/8 inches) thick
2. Wood block—7.3 cm (2-7/8 inches) thick

6. Remove the hairpin cotter and washer from the lower lift-arm pin (Figure 62).

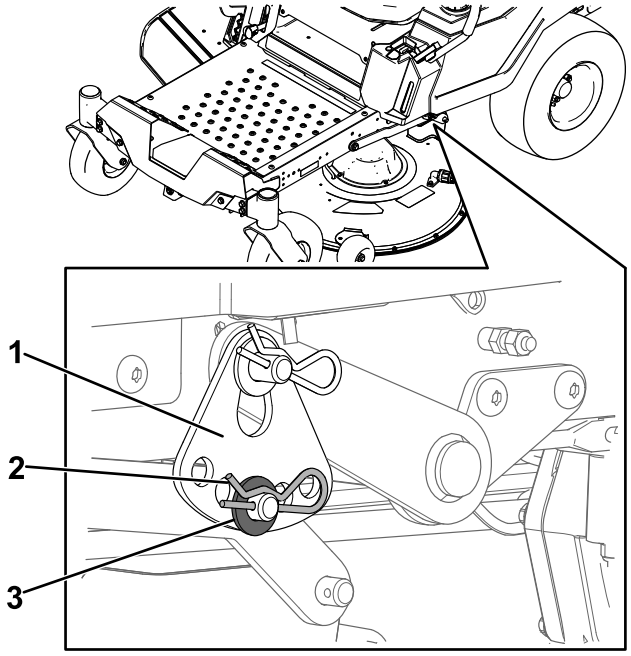

g294197

Figure 62

1. Height-of-cut plate
2. Hairpin cotter
3. Washer

7. Rotate the height-of-cut plate to a different hole so that it supports the weight of the mower deck after you install the plate (Figure 63).

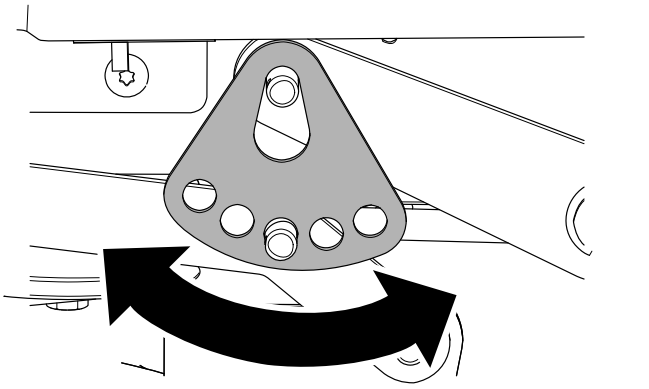

g294195

Figure 63

8. Install the washer and hairpin cotter (Figure 63).
9. Repeat steps 6 through 8 for the other side of the machine.
10. Check the side-to-side level again; repeat this procedure until the measurements are correct.
11. Continue leveling the mower deck by checking the front-to-rear blade slope; refer to Checking the Front-to-Rear Blade Slope (page 43).

Adjusting the Front-to-Rear Blade Slope

1. Rotate the adjustment nut in the front of the mower (Figure 64).

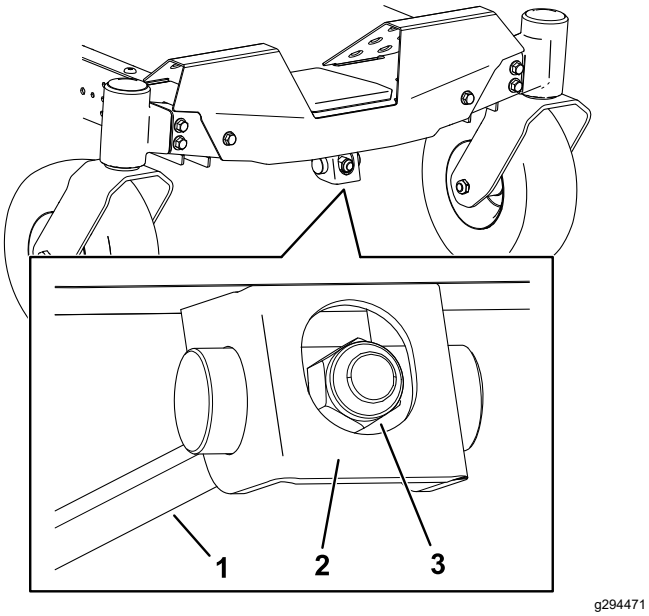

g294471

Figure 64

1. Adjusting rod
2. Adjusting block
3. Adjustment nut

2. To raise the front of the mower deck, tighten the adjustment nut.
3. To lower the front of the mower deck, loosen the adjustment nut.
4. After adjustment, check the front-to-rear slope again, continue adjusting the nut until the front blade tip is 1.6 to 7.9 mm (1/16 to 5/16 inch) lower than the rear blade tip; refer to Checking the Front-to-Rear Blade Slope (page 43).
5. When the front-to-rear blade slope is correct, check the side-to-side level of the mower deck again; refer to Checking the Side-to-Side Level (page 43).

Removing the Mower Deck

1. Park the machine on a level surface, disengage the blade-control switch (PTO), and move the motion-control levers outward to the PARK position.
2. Shut off the engine, remove the key, and wait for all moving parts to stop before leaving the operating position.
3. Lower the height-of-cut lever to the lowest position.
4. Remove the hairpin cotter from the front support rod, and remove the rod from the deck bracket (Figure 65).

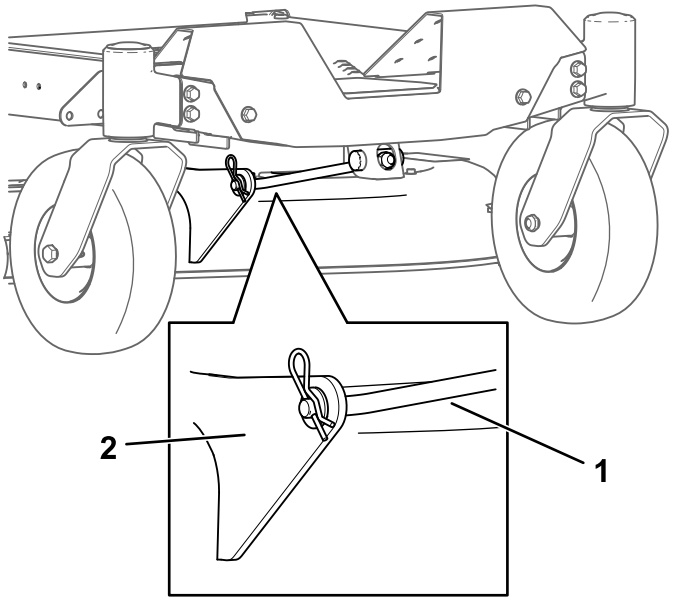

g366001

Figure 65

1. Front support rod
2. Deck bracket

5. Carefully lower the front of the mower deck to the ground.
6. On 1 side of the machine, remove the washer and hairpin cotter from the deck pin (Figure 66).

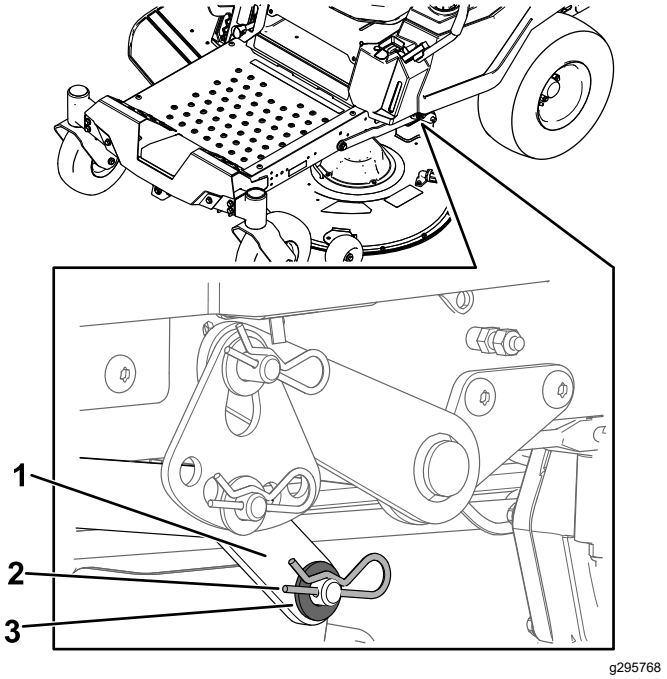

Figure 66

1. Lift arm
2. Hairpin cotter
3. Washer

7. Remove the lift arm from the deck pin (Figure 66).
8. Repeat steps 6 and 7 for the other side of the machine.
9. Slide the mower deck rearward to remove the mower belt from the engine pulley.
10. Slide the mower deck out from underneath the machine.

Note: Retain all parts for future installation.

Installing the Mower Deck

1. Park the machine on a level surface, disengage the blade-control switch (PTO), and move the motion-control levers outward to the PARK position.
2. Shut off the engine, remove the key, and wait for all moving parts to stop before leaving the operating position.
3. Slide the mower under the machine.
4. Lower the height-of-cut lever to the lowest position.
5. On 1 side of the machine, lift the rear of the mower deck and install the lift arm to the deck pin (Figure 66).
6. Install the lift arm using the washer and hairpin cotter (Figure 66).
7. Repeat steps 5 and 6 for the other side of the machine.
8. Attach the front support rod to the mower deck with the clevis pin and hairpin cotter (Figure 65).
9. Install the mower belt onto the engine pulley; refer to Replacing the Mower Belt (page 39).

Replacing the Grass Deflector

Service Interval: Before each use or daily—Inspect the grass deflector for damage.

⚠ WARNING

An uncovered discharge opening could allow the machine to throw objects toward you or bystanders, resulting in serious injury. Also, contact with the blade could occur.

Never operate the machine without the grass deflector, the discharge cover, or the grass-collection system in place.

1. Remove the nut (3/8 inch) from the rod under the mower (Figure 67).

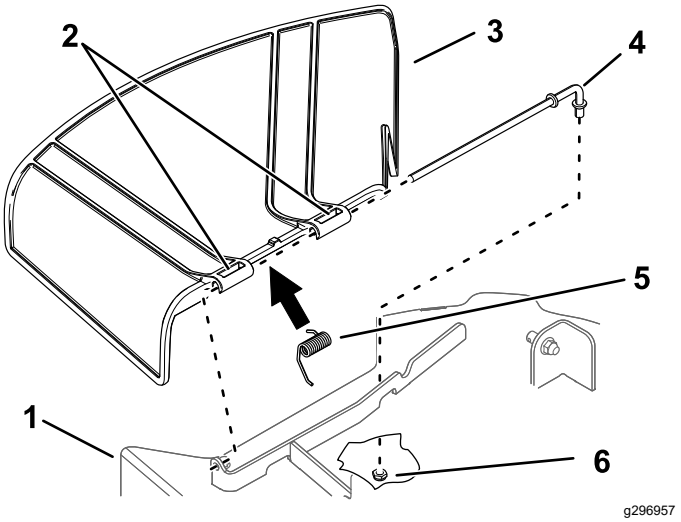

Figure 67

1. Mower deck
2. Grass-deflector pivot
3. Grass deflector
4. Rod
5. Spring
6. Nut (3/8 inch)

2. Slide the rod out of the deck bracket, spring, and grass deflector (Figure 67).
3. Remove the damaged or worn grass deflector.
4. Install the new grass deflector (Figure 67).
5. Slide the straight end of the rod through the rear grass deflector pivot.
6. Place the spring on the rod, with end wires down, and between the grass deflector brackets.

7. Slide the rod through the second grass-deflector pivot (Figure 67).
8. Insert the rod at the front of the grass deflector into the bracket on the deck.
9. Secure the rear end of the rod into the mower with a nut (3/8 inch) as shown in Figure 67.

Important: **The grass deflector must be spring-loaded in the down position. Lift the deflector up to test that it snaps into the full-down position.**

Cleaning

Washing the Underside of the Mower Deck

Service Interval: After each use

Important: **You can wash the machine with a mild detergent and water. Do not pressure wash the machine. Avoid excessive use of water, especially near the control panel, under the seat, around the engine, hydraulic pumps, and motors.**

Wash the underside of the mower deck after each use to prevent grass buildup for improved mulch action and clipping dispersal.

1. Park the machine on a level surface, disengage the blade-control switch (PTO), and move the motion-control levers outward to the PARK position.
2. Shut off the engine, remove the key, and wait for all moving parts to stop before leaving the operating position.
3. Attach the hose coupling to the end of the mower washout fitting, and turn the water on high (Figure 68).

   Note: Spread petroleum jelly on the washout fitting O-ring to make the coupling slide on easier and protect the O-ring.

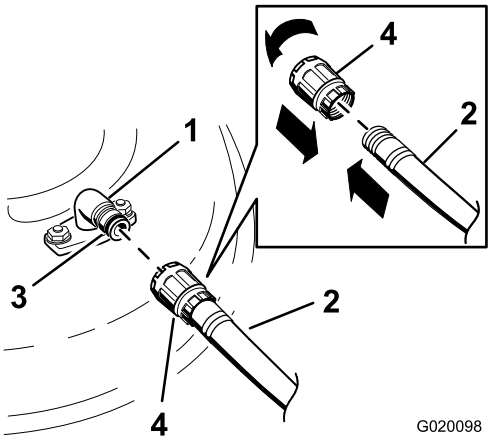

g020098

Figure 68

1. Washout fitting
2. Hose
3. O-ring
4. Coupling

4. Lower the mower to the lowest height-of-cut.
5. Sit on the seat and start the engine.
6. Engage the blade-control switch and let the mower run for 1 to 3 minutes.
7. Disengage the blade-control switch, shut off the engine, remove the key, and wait for all moving parts to stop.

8. Turn the water off and remove the coupling from the washout fitting.

   Note: If the mower is not clean after 1 washing, soak it and let it stand for 30 minutes. Then repeat the process.

9. Run the mower again for 1 to 3 minutes to remove excess water.

⚠ WARNING

A broken or missing washout fitting could expose you and others to thrown objects or blade contact. Contact with a blade or thrown debris can cause injury or death.

- **Replace broken or missing washout fitting immediately, before using machine again.**
- **Never put your hands or feet under the mower or through openings in the machine.**

Disposing of Waste

Engine oil, batteries, hydraulic fluid, and engine coolant are pollutants to the environment. Dispose of these according to your state and local regulations.

Storage

Storage Safety

- Shut off the engine, remove the key, and wait for all moving parts to stop before you leave the operator's position. Allow the machine to cool before adjusting, servicing, cleaning, or storing it.
- Do not store the machine or fuel near flames or drain the fuel indoors or inside an enclosed trailer.
- Do not store the machine or fuel container where there is an open flame, spark, or pilot light, such as on a water heater or on other appliances.

Cleaning and Storage

1. Park the machine on a level surface, disengage the blade-control switch (PTO), and move the motion-control levers outward to the PARK position.
2. Shut off the engine, remove the key, and wait for all moving parts to stop before leaving the operating position.
3. Remove grass clippings, dirt, and grime from the external parts of the entire machine, especially the engine and hydraulic system. Clean dirt and chaff from the outside of the engine cylinder-head fins and blower housing.

   Important: **You can wash the machine with mild detergent and water. Do not pressure-wash the machine. Avoid excessive use of water, especially near the control panel, engine, hydraulic pumps, and motors.**
4. Check the parking brake operation; refer to Park Position (page 13).
5. Service the air cleaner; refer to Servicing the Air Cleaner (page 31).
6. Grease the machine; refer to Lubrication (page 30).
7. Change the crankcase oil; refer to Changing the Engine Oil (page 32).
8. Check the tire pressure; refer to Checking the Tire Pressure (page 38).
9. Charge the battery; refer to Charging the Battery (page 37).
10. If storing the machine with the battery installed, disconnect the negative (black) cable from the battery.
11. Scrape any heavy buildup of grass and dirt from the underside of the mower, then wash the machine with a garden hose.

Note: Run the machine with the blade-control switch (PTO) engaged and the engine at high idle for 2 to 5 minutes after washing.

12. Check the condition of the blades; refer to Servicing the Cutting Blades (page 40).
13. Prepare the machine for storage for over 30 days as follows:
    A. Add fuel stabilizer/conditioner to fresh fuel in the tank. Follow mixing instructions from the fuel stabilizer manufacturer. Do not use an alcohol-based stabilizer (ethanol or methanol).
    B. Run the engine to distribute conditioned fuel through the fuel system for 5 minutes.
    C. Shut off the engine, allow it to cool, and drain the fuel tank using a pump type syphon or operate engine until it shuts off.
    D. Dispose of fuel properly. Recycle the fuel according to local codes.

    Important: **Do not store fuel containing stabilizer/conditioner longer than the duration recommended by the fuel-stabilizer manufacturer.**
14. Remove and check the condition of the spark plug(s); refer to Servicing the Spark Plug (page 34). With the spark plug(s) removed from the engine, pour 30 ml (2 tablespoons) of engine oil into the spark plug hole. Use the starter to crank the engine and distribute the oil inside the cylinder. Install the spark plug(s). Do not install the wire on the spark plug(s).
15. Check and tighten all fasteners. Repair or replace any part that is damaged.
16. Paint all scratched or bare metal surfaces. Paint is available from your Authorized Service Dealer.
17. Store the machine in a clean, dry garage or storage area. Remove the key from the switch and keep it out of reach of children or other unauthorized users. Cover the machine to protect it and keep it clean.

Storing the Battery

1. Fully charge the battery.
2. Let the battery rest for 24 hours, then check the battery voltage.

   Note: If the battery voltage is below 12.6 V, repeat steps 1 and 2.
3. Disconnect the cables from the battery.
4. Check the voltage periodically to ensure that the voltage is 12.4 V or higher.

   Note: If the battery voltage is below 12.4 V, repeat steps 1 and 2.

Battery Storage Tips

If you are storing the battery outside the machine, do the following:

- Store the battery in a cool, dry area in an upright position.
- Do not stack batteries directly on top of each other, unless they are in cartons.
- Do not stack more than 3 batteries (only 2 if the battery type is commercial).
- Test a wet battery every 4 to 6 months and charge it, if necessary.
- Always test and charge the battery before installation.

Troubleshooting

Problem	Possible Cause	Corrective Action
The fuel tank is showing signs of collapsing or the machine is frequently showing signs of running out of fuel.	1. The air-cleaner paper element clogged.	1. Clean the paper element.
The engine overheats.	1. The engine load is excessive. 2. The oil level in the crankcase is low. 3. The cooling fins and air passages under the engine-blower housing are plugged. 4. The air cleaner is dirty. 5. Dirt, water, or stale fuel is in the fuel system.	1. Reduce the ground speed. 2. Add oil to the crankcase. 3. Remove the obstruction from the cooling fins and air passages. 4. Clean or replace the air-cleaner element. 5. Contact an Authorized Service Dealer
The starter does not crank.	1. The blade-control switch is engaged. 2. The motion-control levers are not in the PARK position. 3. The battery is dead. 4. The electrical connections are corroded or loose. 5. A fuse is blown. 6. A relay or switch is damaged.	1. Disengage the blade-control switch. 2. Move the motion-control levers outward to the PARK position. 3. Charge the battery. 4. Check the electrical connections for good contact. 5. Replace the fuse. 6. Contact an Authorized Service Dealer.
The engine does not start, starts hard, or fails to keep running.	1. The fuel tank is empty. 2. The choke (if applicable) is not on. 3. The air cleaner is dirty. 4. The spark-plug wire(s) is loose or disconnected. 5. The spark plug(s) is pitted, fouled, or the gap is incorrect. 6. There is dirt in fuel filter. 7. Dirt, water, or stale fuel is in fuel system. 8. There is incorrect fuel in the fuel tank. 9. The oil level in the crankcase is low.	1. Fill the fuel tank. 2. Move the choke lever to the ON position. 3. Clean or replace the air-cleaner element. 4. Install the wire(s) on the spark plug. 5. Install a new, correctly gapped spark plug(s). 6. Replace the fuel filter. 7. Contact an Authorized Service Dealer. 8. Drain the tank and replace the fuel with the proper type. 9. Add oil to the crankcase.
The engine loses power.	1. The engine load is excessive. 2. The air cleaner is dirty. 3. The oil level in the crankcase is low. 4. The cooling fins and air passages under the engine blower housing are plugged. 5. The spark plug(s) is pitted, fouled, or the gap is incorrect. 6. The fuel-tank vent is blocked. 7. There is dirt in the fuel filter. 8. Dirt, water, or stale fuel is in the fuel system. 9. There is incorrect fuel in the fuel tank.	1. Reduce the ground speed. 2. Clean the air-cleaner element. 3. Add oil to the crankcase. 4. Remove the obstruction from the cooling fins and air passages. 5. Install a new, correctly gapped spark plug(s). 6. Contact an Authorized Service Dealer. 7. Replace the fuel filter. 8. Contact an Authorized Service Dealer. 9. Contact an Authorized Service Dealer.

Problem	Possible Cause	Corrective Action
The machine does not drive.	1. The bypass valves are open. 2. The traction belts are worn, loose, or broken. 3. The traction belts are off the pulleys. 4. The transmission has failed.	1. Close the tow valves. 2. Contact an Authorized Service Dealer. 3. Contact an Authorized Service Dealer. 4. Contact an Authorized Service Dealer.
The machine vibrates abnormally.	1. The cutting blade(s) is/are bent or unbalanced. 2. The blade mounting bolt is loose. 3. The engine mounting bolts are loose. 4. The engine pulley, idler pulley, or blade pulley is loose. 5. The engine pulley is damaged. 6. The blade spindle is bent. 7. The motor mount is loose or worn.	1. Install new cutting blade(s). 2. Tighten the blade mounting bolt. 3. Tighten the engine mounting bolts. 4. Tighten the appropriate pulley. 5. Contact an Authorized Service Dealer. 6. Contact an Authorized Service Dealer. 7. Contact an Authorized Service Dealer.
The cutting height is uneven.	1. The blade(s) is not sharp. 2. A cutting blade(s) is/are bent. 3. The mower is not level. 4. An anti-scalp roller (if applicable) is not set correctly. 5. The underside of the mower deck is dirty. 6. The tire pressure is incorrect. 7. A blade spindle is bent.	1. Sharpen the blade(s). 2. Install a new cutting blade(s). 3. Level the mower from side-to-side and front-to-rear. 4. Adjust the anti-scalp wheel height. 5. Clean the underside of the mower deck. 6. Adjust the tire pressure. 7. Contact an Authorized Service Dealer.
The blades do not rotate.	1. The drive belt is worn, loose or broken. 2. The drive belt is off of the pulley. 3. The power-takeoff (PTO) switch or PTO clutch is faulty. 4. The mower belt is worn, loose, or broken.	1. Install a new drive belt. 2. Install the drive belt and check the adjusting shafts and belt guides for the correct position. 3. Contact an Authorized Service Dealer. 4. Install a new mower belt.

Schematics

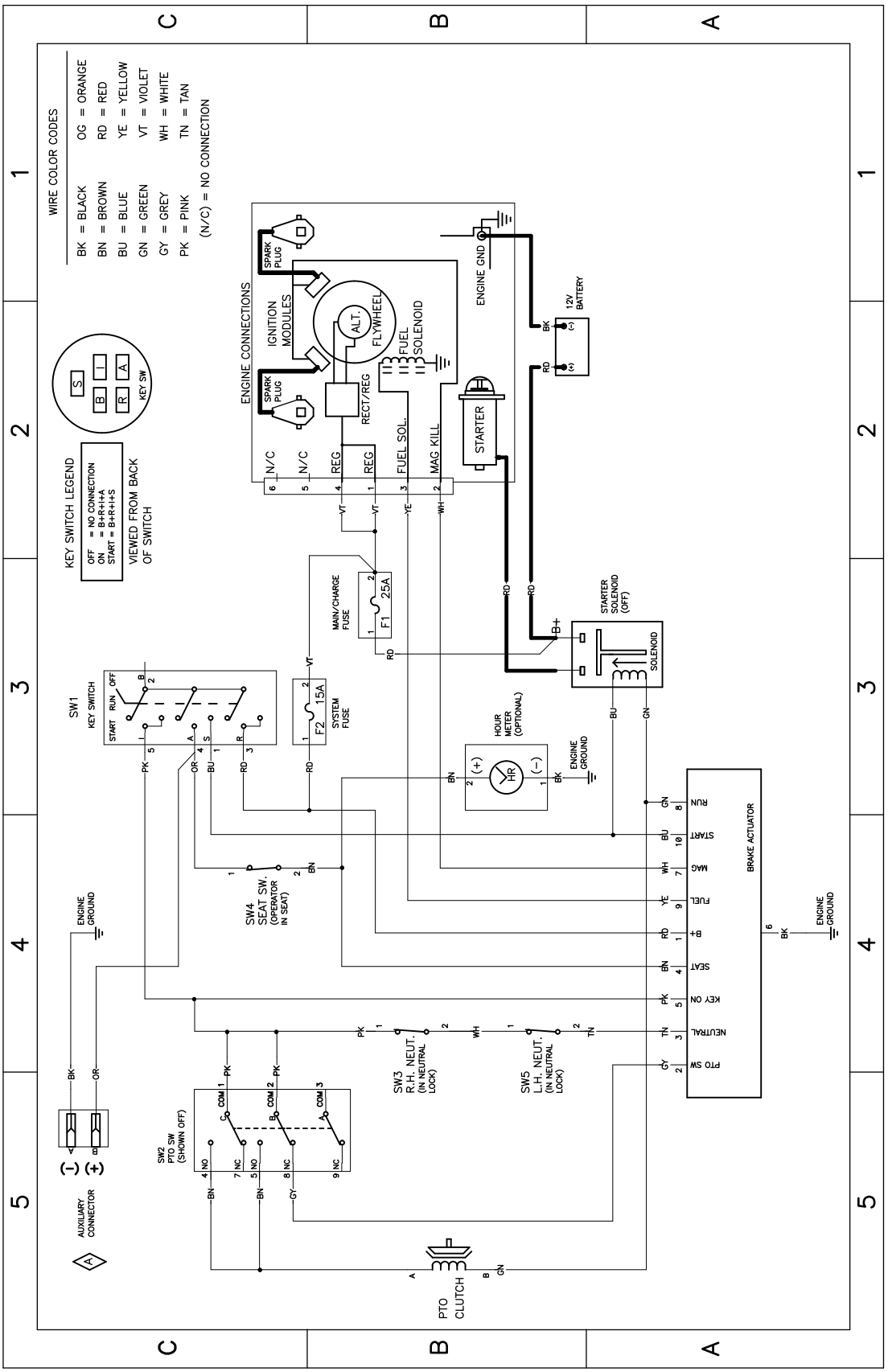

g307974

Electrical Diagram—139–2356 (Rev. A)

Notes:

Notes:

Notes:

California Proposition 65 Warning Information

What is this warning?

You may see a product for sale that has a warning label like the following:



WARNING: Cancer and Reproductive Harm—www.p65Warnings.ca.gov.

What is Prop 65?

Prop 65 applies to any company operating in California, selling products in California, or manufacturing products that may be sold in or brought into California. It mandates that the Governor of California maintain and publish a list of chemicals known to cause cancer, birth defects, and/or other reproductive harm. The list, which is updated annually, includes hundreds of chemicals found in many everyday items. The purpose of Prop 65 is to inform the public about exposure to these chemicals.

Prop 65 does not ban the sale of products containing these chemicals but instead requires warnings on any product, product packaging, or literature with the product. Moreover, a Prop 65 warning does not mean that a product is in violation of any product safety standards or requirements. In fact, the California government has clarified that a Prop 65 warning "is not the same as a regulatory decision that a product is 'safe' or 'unsafe.'" Many of these chemicals have been used in everyday products for years without documented harm. For more information, go to https://oag.ca.gov/prop65/faqs-view-all.

A Prop 65 warning means that a company has either (1) evaluated the exposure and has concluded that it exceeds the "no significant risk level"; or (2) has chosen to provide a warning based on its understanding about the presence of a listed chemical without attempting to evaluate the exposure.

Does this law apply everywhere?

Prop 65 warnings are required under California law only. These warnings are seen throughout California in a wide range of settings, including but not limited to restaurants, grocery stores, hotels, schools, and hospitals, and on a wide variety of products. Additionally, some online and mail order retailers provide Prop 65 warnings on their websites or in catalogs.

How do the California warnings compare to federal limits?

Prop 65 standards are often more stringent than federal and international standards. There are various substances that require a Prop 65 warning at levels that are far lower than federal action limits. For example, the Prop 65 standard for warnings for lead is 0.5 µg/day, which is well below the federal and international standards.

Why don't all similar products carry the warning?

- Products sold in California require Prop 65 labelling while similar products sold elsewhere do not.
- A company involved in a Prop 65 lawsuit reaching a settlement may be required to use Prop 65 warnings for its products, but other companies making similar products may have no such requirement.
- The enforcement of Prop 65 is inconsistent.
- Companies may elect not to provide warnings because they conclude that they are not required to do so under Prop 65; a lack of warnings for a product does not mean that the product is free of listed chemicals at similar levels.

Why does Toro include this warning?

Toro has chosen to provide consumers with as much information as possible so that they can make informed decisions about the products they buy and use. Toro provides warnings in certain cases based on its knowledge of the presence of one or more listed chemicals without evaluating the level of exposure, as not all the listed chemicals provide exposure limit requirements. While the exposure from Toro products may be negligible or well within the "no significant risk" range, out of an abundance of caution, Toro has elected to provide the Prop 65 warnings. Moreover, if Toro does not provide these warnings, it could be sued by the State of California or by private parties seeking to enforce Prop 65 and subject to substantial penalties.