Form No. 3471-888 Rev C

Three-Wheel Drive Kit

Greensmaster® TriFlex® 3300/3400 Series Traction Unit

Model No. 04714

Installation Instructions

Installation

Loose Parts

Use the chart below to verify that all parts have been shipped.

Procedure	Description	Qty.	Use
1	No parts required	–	Prepare the machine.
2	No parts required	–	Remove the existing wheel.
3	Wire form hose guide Bolt (1/2 x 1-1/2 inches)	1 2	Install the wire-form hose guide.
4	Bolt (1/2 x 2-1/2 inches) Locknut Wheel-motor assembly Hydraulic fittings Socket-head bolt (1/2 x 3-3/4 inches) Shim plate	2 4 1 2 4 1	Install the motor assembly.
5	Tube clamp Hydraulic lines Bolt (5/16 x 1-3/4 inches) Cover plate	2 2 1 1	Install the steel lines.
6	Hose bracket Bolt (5/16 x 7/8 inch) Flange nut (5/16 inch) Hose shield Wire form	1 2 6 1 1	Install the hose bracket.
7	45° hydraulic fitting (1-1/16 inch, 12 tpi SAE end) 45° hydraulic fitting (7/8 inch, 14 tpi SAE end) Wire tie Flange nut Cover plate Tube clamp Bolt Nut R-clamp O-ring	1 1 2 1 1 1 2 1 1 1	Install the traction hoses.
8	No parts required	–	Finish the installation.

© 2026—The Toro® Company
8111 Lyndale Avenue South
Bloomington, MN 55420

Register at www.Toro.com.

Original Instructions (EN)
Printed in the USA
All Rights Reserved

3471-888

1

Preparing the Machine

No Parts Required

Procedure

1. Park the machine on a level surface.
2. Lower the cutting units.
3. Engage the parking brake.
4. Shut off the engine and remove the key.

2

Removing the Existing Wheel

No Parts Required

Procedure

1. Raise the unit on the castor fork lift point (Figure 1).

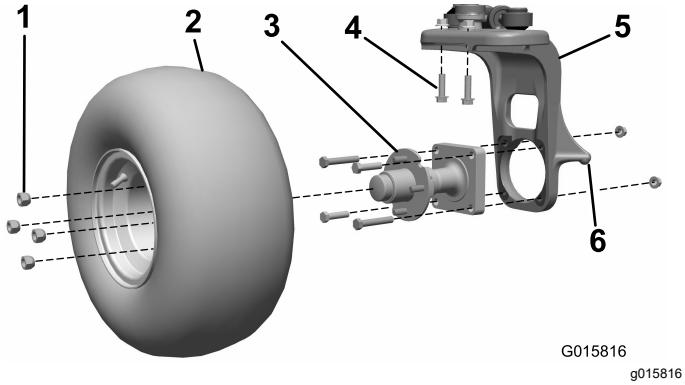

Figure 1

1. Lug nuts
2. Wheel assembly
3. Wheel hub
4. Bolts
5. Castor fork
6. Castor fork lift point

2. Remove the wheel assembly from the wheel hub. Retain the lug nuts (Figure 1).
3. Remove the 4 bolts and 2 nuts securing the wheel hub to the castor fork (Figure 1). Discard all items.
4. Remove the 2 bolts and 2 nuts securing the vertical steering pivot to the castor fork (Figure 1). Discard these items.

   Important: **Do not loosen the 2 remaining bolts securing the spindle to the castor fork.**

3

Installing the Wire-Form Hose Guide

Parts needed for this procedure:

1	Wire form hose guide
2	Bolt (1/2 x 1-1/2 inches)

Procedure

1. Install the wire-form hose guide on top of the castor fork and secure it with 2 bolts (1/2 x 1-1/2 inches).
2. Torque the bolts to 75 ft-lb (101.7 N·m).

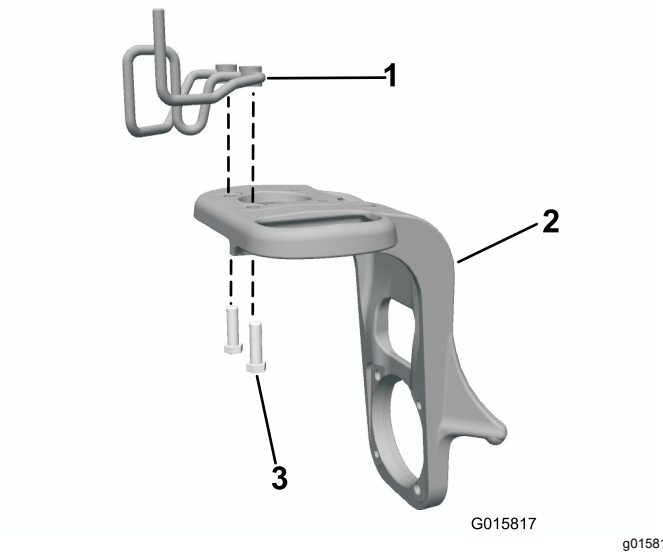

Figure 2

1. Wire-form hose guide
2. Castor fork
3. Bolt (1/2 x 1-1/2 inches)

4

Installing the Motor Assembly

Parts needed for this procedure:

2	Bolt (1/2 x 2-1/2 inches)
4	Locknut
1	Wheel-motor assembly
2	Hydraulic fittings
4	Socket-head bolt (1/2 x 3-3/4 inches)
1	Shim plate

Procedure

1. Install the 45° hydraulic fittings into the wheel motor and orient them approximately as shown in Figure 3. Leave the fittings loose.

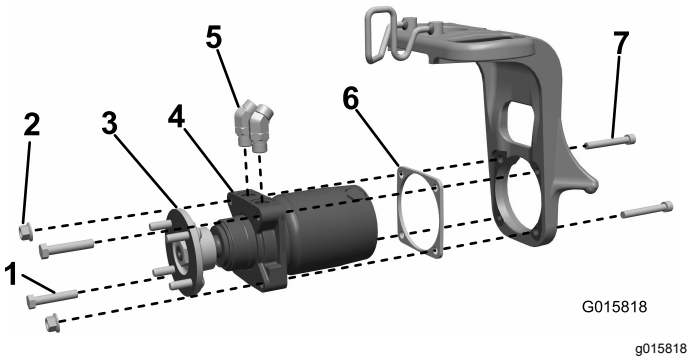

g015818

Figure 3

1. Bolt
2. Locknut
3. Wheel hub
4. Wheel motor assembly
5. Hydraulic fittings
6. Shim plate
7. Socket-head bolt

2. Install the wheel hub to the motor assembly and torque it to 420 to 461 N·m (310 to 340 ft-lb).
3. Identify if your machine has a caster fork that has 4 threaded holes or a combination of 2 threaded holes and 2 through holes where the wheel-motor assembly mounts to the caster fork (Figure 4).

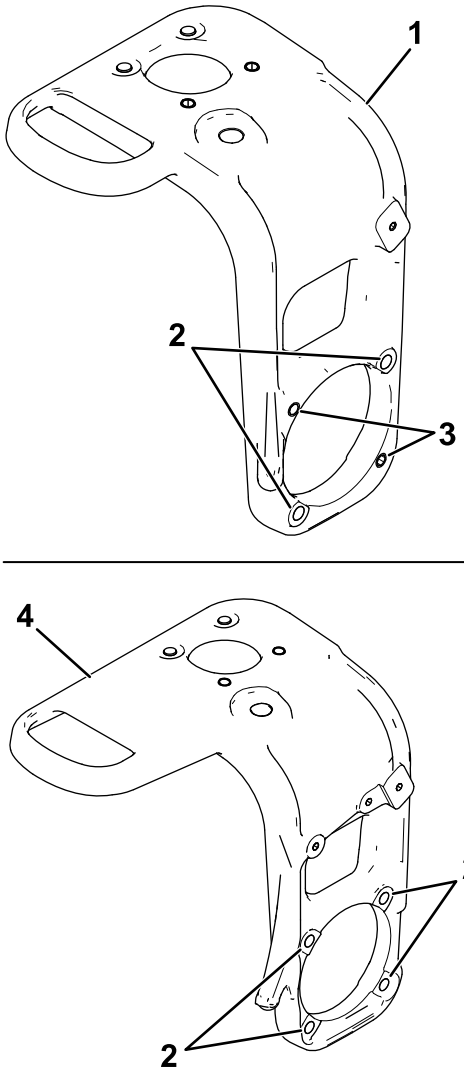

g524135

Figure 4

1. Steering fork—2 threaded holes and 2 through holes
2. Through holes
3. Threaded holes
4. Steering fork—4 through holes

4. Perform the appropriate step per the caster fork that is equipped on your machine:
   - **For machines with caster forks that have 2 threaded holes and 2 through holes where the wheel-motor assembly mounts to the caster fork:** Install the wheel-motor assembly and shim plate to the castor fork (placing the shim between the motor and castor fork) and secure it with 2 socket head bolts (1/2 x 3-3/4 inches), 2 bolts (1/2 x 2-1/2 inches), and 2 locknuts (Figure 3).
   - **For machines with caster forks that have 4 threaded holes where the wheel-motor assembly mounts to the caster fork:** Install the wheel-motor assembly and shim

plate to the castor fork (placing the shim between the motor and castor fork) and secure it with 4 socket head bolts (1/2 x 3-3/4 inches) and 4 locknuts (Figure 5).

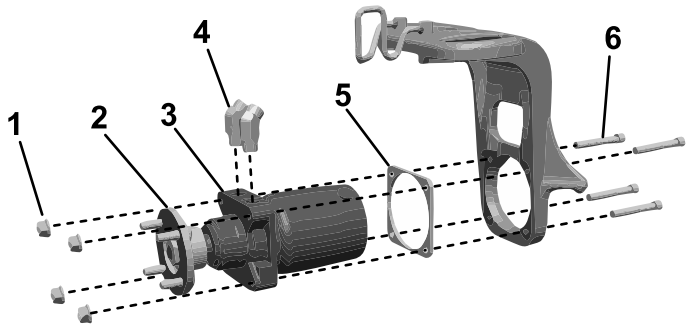

Figure 5

1. Locknut
2. Wheel hub
3. Wheel motor assembly
4. Hydraulic fittings
5. Shim plate
6. Socket-head bolt

5. Torque the bolts to 101.7 N·m (75 ft-lb).

5

Installing the Steel Lines

Parts needed for this procedure:

2	Tube clamp
2	Hydraulic lines
1	Bolt (5/16 x 1-3/4 inches)
1	Cover plate

Procedure

1. Loosely install the steel hydraulic lines to the wheel motor fittings (Figure 6).

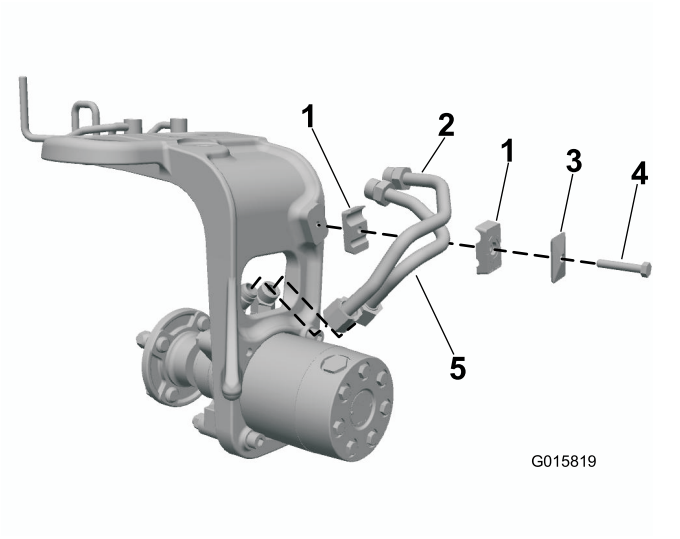

Figure 6

1. Tube clamp
2. Hydraulic lines
3. Cover plate
4. Bolt

2. Install the tube clamp to the castor fork. Adjust this assembly for proper fit with the hydraulic fittings and tube clamps (Figure 6).
3. Secure the tube clamps with a cover plate and bolt (5/16 x 1-3/4 inches) as shown in Figure 6.

   Important: **Do not tighten fully until the last step.**
4. Secure the tube fittings and hydraulic fittings. Use a back-up wrench to eliminate twisting on hard lines.

6

Installing the Hose Bracket

Parts needed for this procedure:

1	Hose bracket
2	Bolt (5/16 x 7/8 inch)
6	Flange nut (5/16 inch)
1	Hose shield
1	Wire form

Gasoline-Powered Traction Units

Install the hose bracket to the frame and secure it with 2 bolts (5/16 x 7/8 inch) and 2 flange nuts (5/16 inch) as shown in Figure 7.

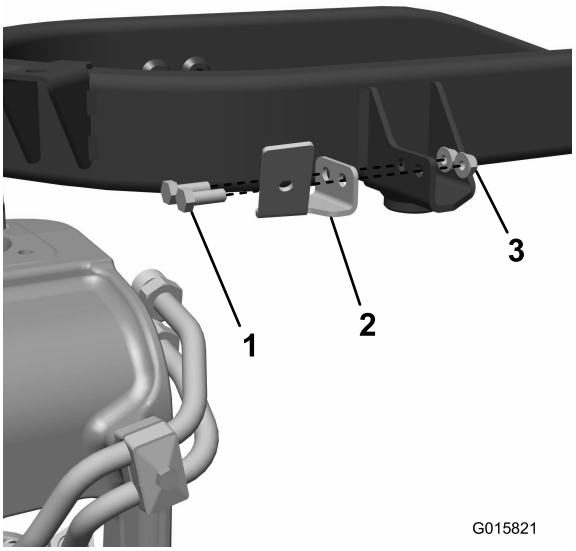

Figure 7

1. Bolt (5/16 x 7/8 inch)
2. Hose bracket
3. Flange nut (5/16 inch)

Diesel-Powered Traction Units

1. Install the wire form to the frame and secure it with 2 bolts (5/16 inch) and 2 nuts (Figure 8).

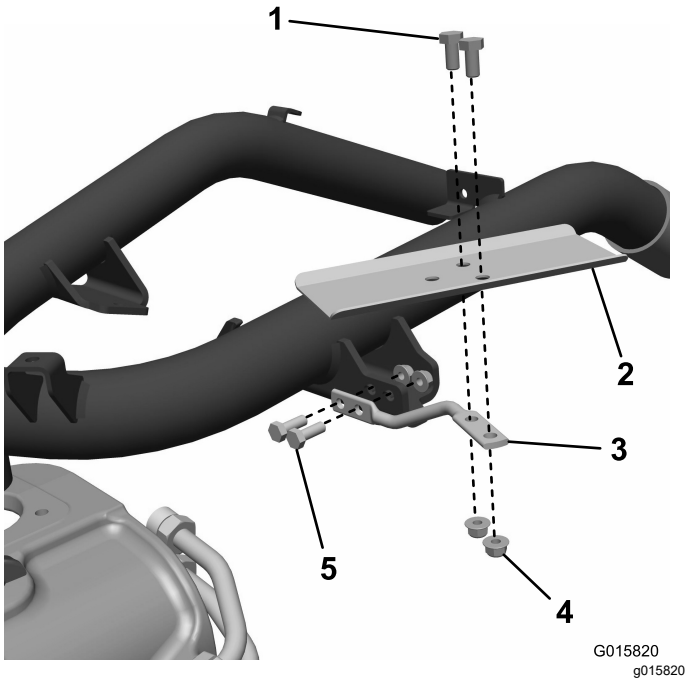

Figure 8

1. Bolt
2. Hose shield
3. Wire form
4. Nut
5. Bolt (5/16 inch)

2. Install the hose shield to the wire form and secure it with 2 bolts and 2 nuts.

7

Installing the Traction Hoses

Parts needed for this procedure:

1	45° hydraulic fitting (1-1/16 inch, 12 tpi SAE end)
1	45° hydraulic fitting (7/8 inch, 14 tpi SAE end)
2	Wire tie
1	Flange nut
1	Cover plate
1	Tube clamp
2	Bolt
1	Nut
1	R-clamp
1	O-ring

Procedure

1. Disconnect the lower hydraulic pump hose from the pump and from the upper bulkhead tee fitting to the front motors. Discard this hose (Figure 9).

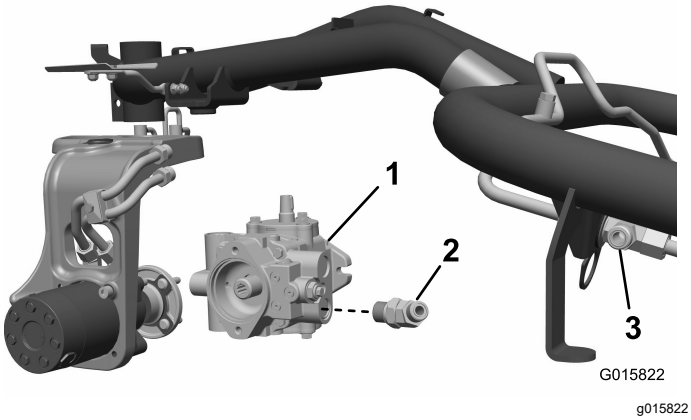

Figure 9

1. Hydraulic pump (Eaton)
2. 45° hydraulic fitting (1-1/16 inch, 12 tpi SAE end is shown)
3. Tee fitting

2. **Gasoline-powered traction unit only:** Remove the lower 90° hydraulic fitting from the pump and replace it with the appropriate 45° hydraulic fitting per the hydraulic pump on your machine:

- Machines equipped with an Eaton pump: Install the fitting that has a 1-1/16 inch, 12 tpi SAE end.
- Machines equipped with a Danfoss pump: Install the fitting that has a 7/8 inch, 14 tpi SAE end.

Leave the fitting loose, oriented up, and facing out (Figure 9).

3. Install the hose with straight fittings at both ends through the guide on the castor fork and attach it to the lower steel line. Attach the opposite end to the lower hydraulic-pump fitting (Figure 10 or Figure 11).
4. Install the remaining hose through hose guide and attach to upper steel line. Attach the opposite end and O-ring to the upper tee fitting for front-wheel motor (Figure 10 or Figure 11).
5. Install both hose assemblies into the tube clamp at the hose cover split and attach it to the bracket. (Figure 10; or Figure 11).
6. Tighten the jam nuts on the motor fittings.
7. Install the tire and secure with the previously-removed lug nuts.
8. Rotate the castor fork and the adjust hose position for proper fit by flexing it through the hose guide and clamp.
9. Add the wire ties to the hose assemblies as shown (Figure 10 or Figure 11). Secure all hose ends, fittings, and clamps.
10. Rotate the castor fork fully in each direction and check for clearance with tire, frame, and tank.

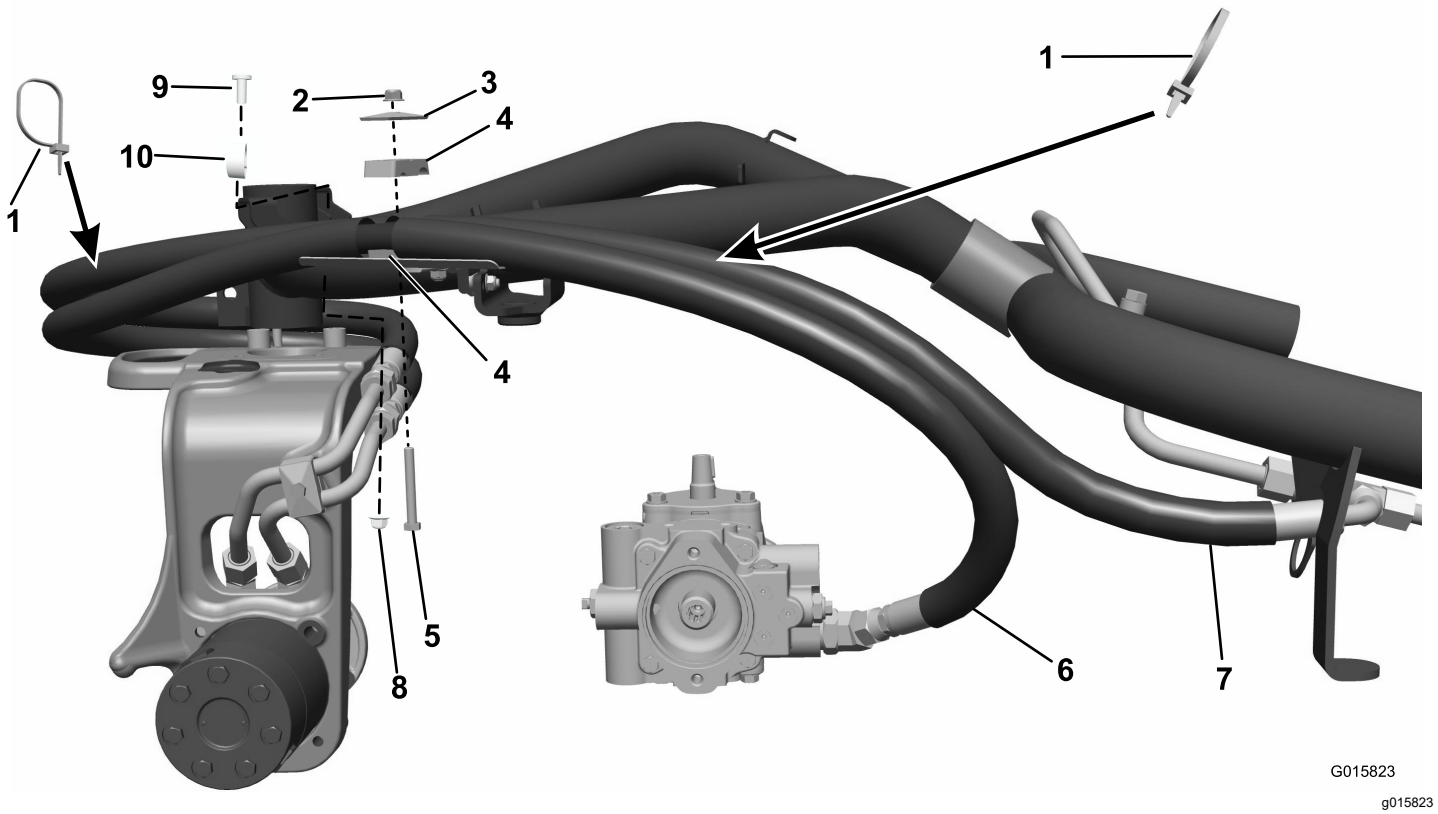

Figure 10
Diesel Engine

1. Wire tie
2. Flange nut
3. Cover plate
4. Tube clamp
5. Bolt
6. Front motor attachment
7. Hydraulic pump attachment
8. Nut
9. Bolt
10. R-clamp (install on outer hose, only on hose shield)

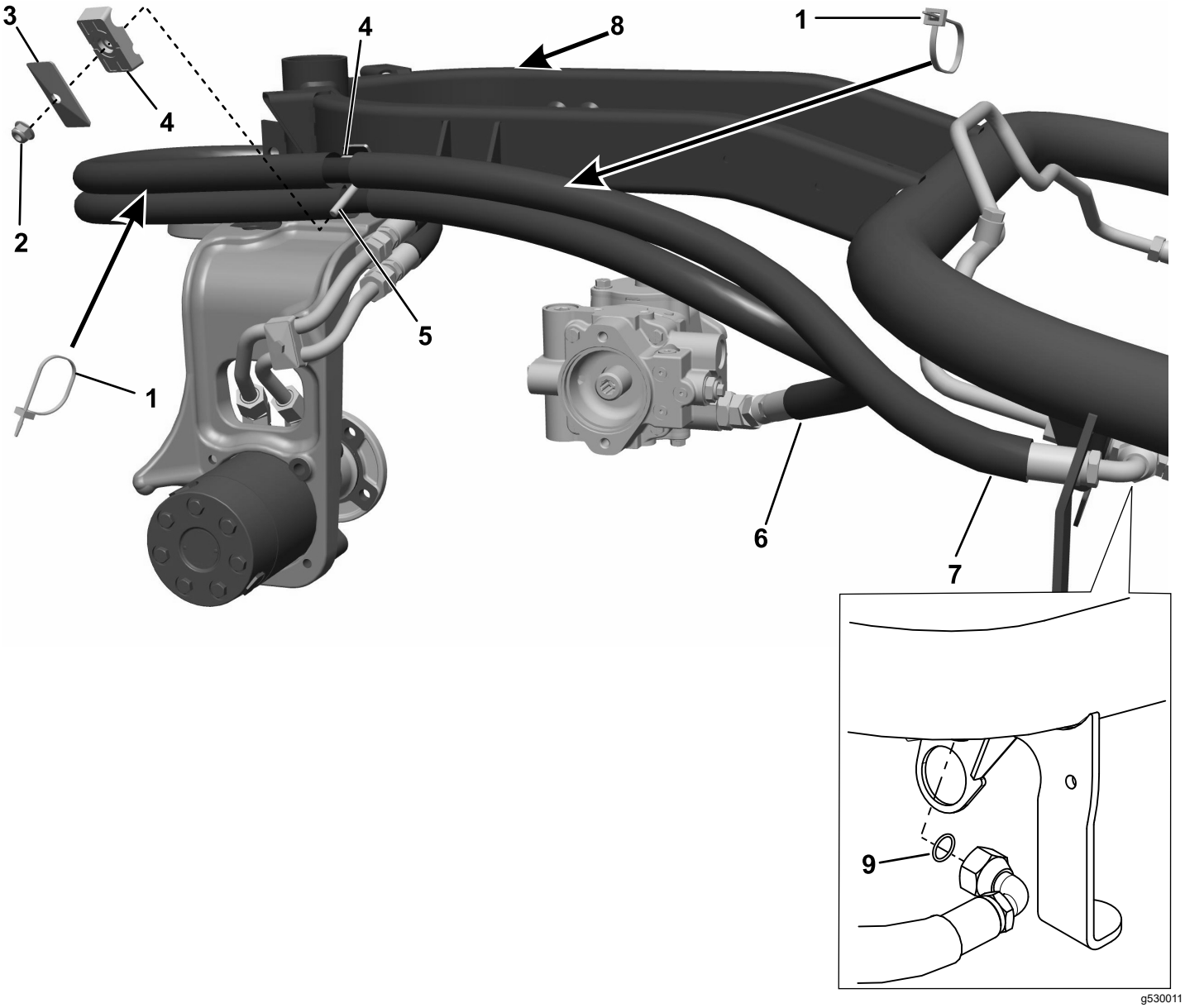

Figure 11
Gasoline Engine

1. Wire tie
2. Flange nut
3. Cover plate
4. Tube clamp
5. Bolt
6. Front motor attachment
7. Hydraulic pump attachment
8. Secure the throttle cable to the frame with a wire tie at this location.
9. O-ring

8

Finishing the Installation

No Parts Required

Procedure

After installing the kit, drive the machine in a figure-8 pattern, then torque the rear wheel hub nut to 420 to 461 N·m (310 to 340 ft-lb).

Notes:

Notes:

Notes:



Count on it.