Form No. 3477-629 Rev B

TORO®

Count on it.

Parts Catalog

11-Blade EdgeSeries™ DPA Cutting Unit

Greensmaster® 3300, 3400, or 3360 with GeoLink® Mow Series Traction Unit

Model No. 04658—Serial No. 400000000 and Up

Register at www.Toro.com.
Original Instructions (EN)

CE

3477-629 B

Ordering Replacement Parts

To order replacement parts, please supply the part number, the quantity, and the description of each part desired.

Understanding Reference Numbers

Each identified part in an illustration has a reference number. The reference number for a part also appears in the parts list, along with other information about the part.

This catalog uses two special reference number formats, one to indicate parts in a service assembly and another to indicate the quantity of a given part in an illustration.

Service Assembly Reference Numbers

Parts in service assemblies have reference numbers in the form a:b. The a represents the reference number of the entire service assembly and the b represents a sequential number unique to each part within the service assembly.

For example, a wheel assembly might be identified by reference number 6, the tire by 6:1, the valve by 6:2, and the wheel by 6:3. When you order the assembly identified by reference number 6, you receive all parts identified by reference numbers 6:1,6:2, and 6:3. However, you may also order any part individually. Reference numbers of this type appear in illustration and in parts lists.

Reference Numbers Indicating Quantity

In an illustration, if a reference number indicates more than one part, the reference number has the form nX y. The n represents the quantity of the part, the X is the multiplication symbol, and the y represents the reference number.

For example, in an illustration, the reference number 2X 37 means that two of the parts identified by reference number 37 are indicated.

Contents

Frame Assembly 4
Reel Assembly 5
Rear Roller Assembly 6
Roller Rebuild Kit Assembly No. 140-5552 7
Pitch Arm and Weight Assembly 8
Roller Assembly 9
Attachments and Accessories 11

© 2026—The Toro® Company
8111 Lyndale Avenue South
Bloomington, MN 55420

Contact us at www.Toro.com.
Printed in the USA.
All Rights Reserved

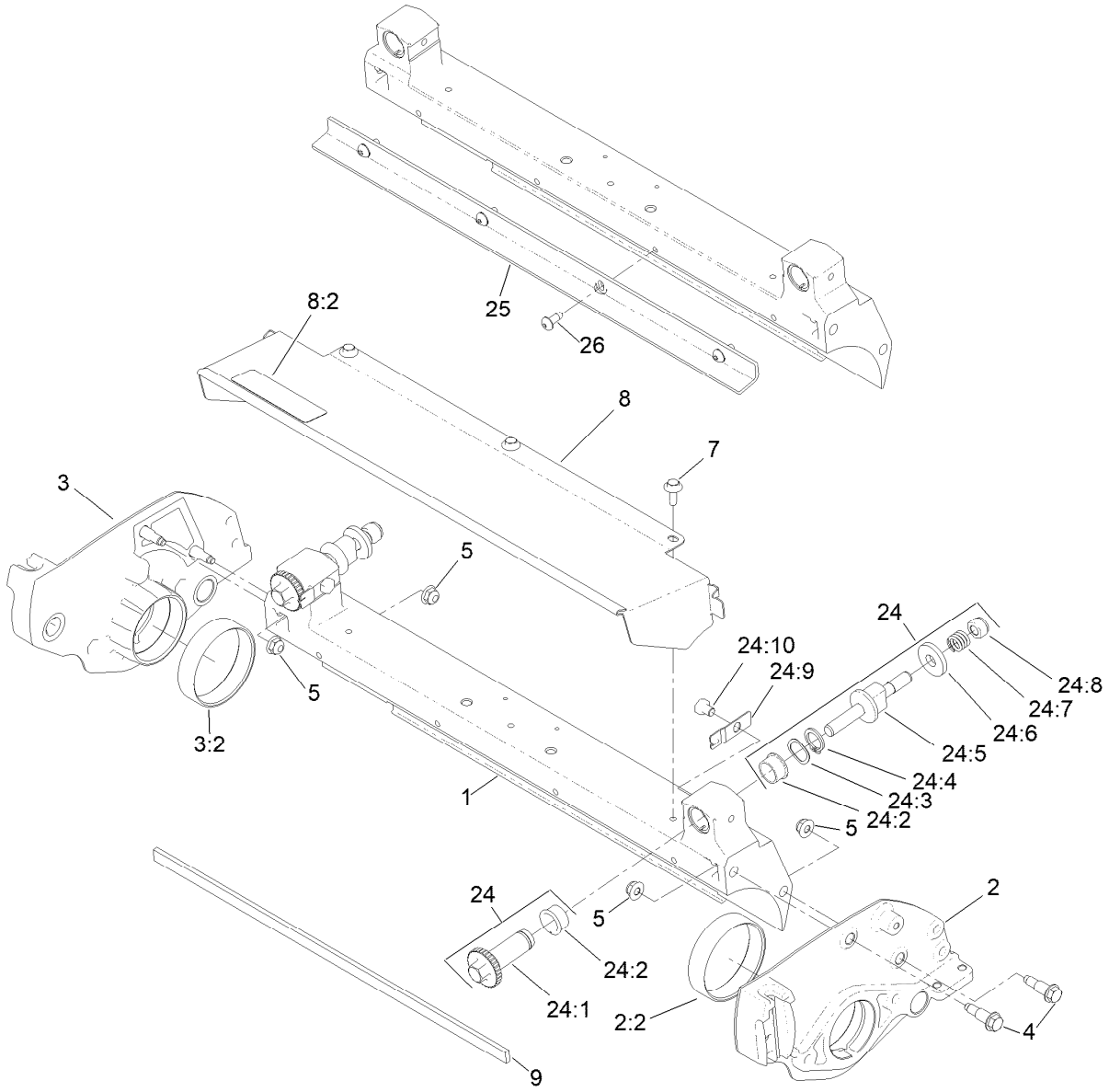

Frame Assembly

Ref.	Part Number	Qty.	Description
1	119-9303	1	Crossmember
2	119-4005	1	LH Sideplate ASM
2:2	117-6619	1	Bushing
3	119-4007	1	RH Sideplate ASM
3:2	117-6619	1	Bushing
4	115-7042	4	Bolt-Shoulder, Flange
5	119-4041	4	Nut-HF
7	119-4012	3	Screw-HWHTF
8	119-4095	1	Grass Shield ASM
8:2	137-9706	1	Decal-Warning
9	106-2619	1	Strip-Seal
24	121-2637	1	DPA Rebuild Kit

Ref.	Part Number	Qty.	Description
24:1	106-5363	2	Shaft-Adjuster
24:2	106-5344	4	Bushing-Flange, Keyed
24:3	119-4164	2	Washer-Wave
24:4	32120-93	2	Ring-Retaining
24:5	137-6130	2	Screw-Adjuster, Bedbar
24:6	119-4155	2	Washer-Hardened
24:7	119-4156	2	Spring-Compression
24:8	119-4039	2	Nut-Hex
24:9	99-2097	2	Detent
24:10	119-4067	2	Screw-HH
25	147-1290-03	1	Bar-Cutoff
26	87-6620	4	Screw-Tph Thd Form

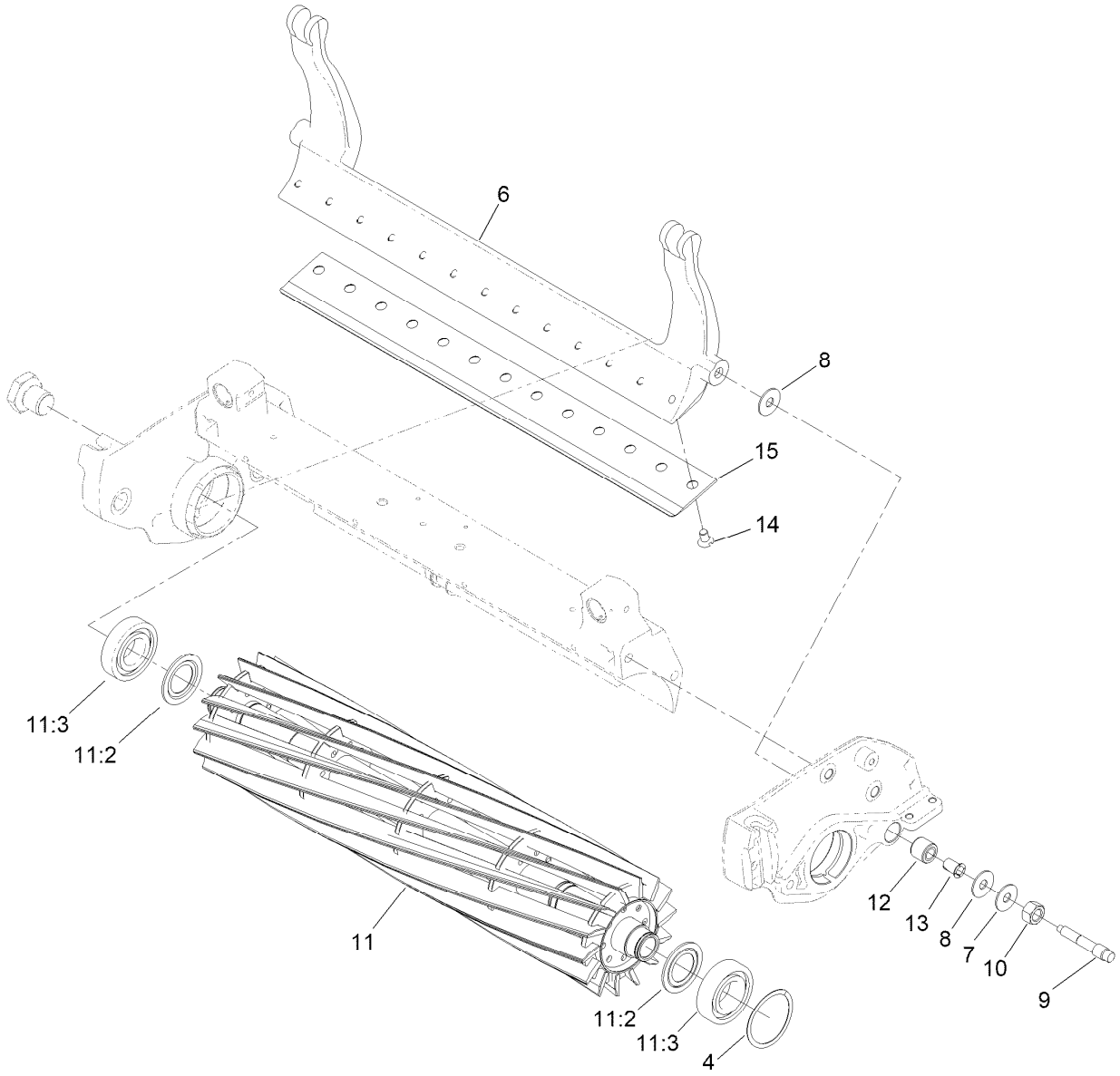

Reel Assembly

Ref.	Part Number	Qty.	Description
4	115-5258	1	Spring-Wire, Flat
6	106-2648-01	1	Bedbar
7	119-4150	2	Washer-Flat
8	52-2900	4	Washer-Plastic
9	117-9493	2	Bolt-Bedbar
10	140-9234	2	Nut-Hex Lock
11	137-8511	1	21 Inch 8 Blade Low Drag Edge Series+ Reel ASM
11	137-8512	1	21 Inch 11 Blade Low Drag Edge Series+ Reel ASM
11	137-8513	1	21 Inch 14 Blade Low Drag Edge Series+ Reel ASM
11:2	115-3299	2	Seal-Flocked
11:3	140-5510	2	Bearing-Sealed, Stainless
12	119-4153	2	Rubber Bushing ASM
13	52-2890	2	Bushing-Nylon
14	119-4151	13	Screw-Bedknife

Ref.	Part Number	Qty.	Description
15	108-4302	1	Bedknife-Tournament, Extended (GR21) ●
15	108-4303	1	Bedknife-Microcut, Extended (GR21) ●
15	115-1880	1	Bedknife-Edgemax Microcut (GR21) ●
15	115-1881	1	Bedknife-Edgemax Tournament (GR21)
15	137-6092	1	Bedknife-Edgemax Fairway (GR21) ●
15	137-6097	1	Bedknife-Fairway (GR21) ●
15	93-4262	1	Bedknife-Microcut (GR21) ●
15	93-4263	1	Bedknife-Tournament Cut (GR21) ●
15	93-4264	1	Bedknife-Low Cut (GR21) ●
15	94-6392	1	Bedknife-Highcut (GR21) ●

● Optional Equipment

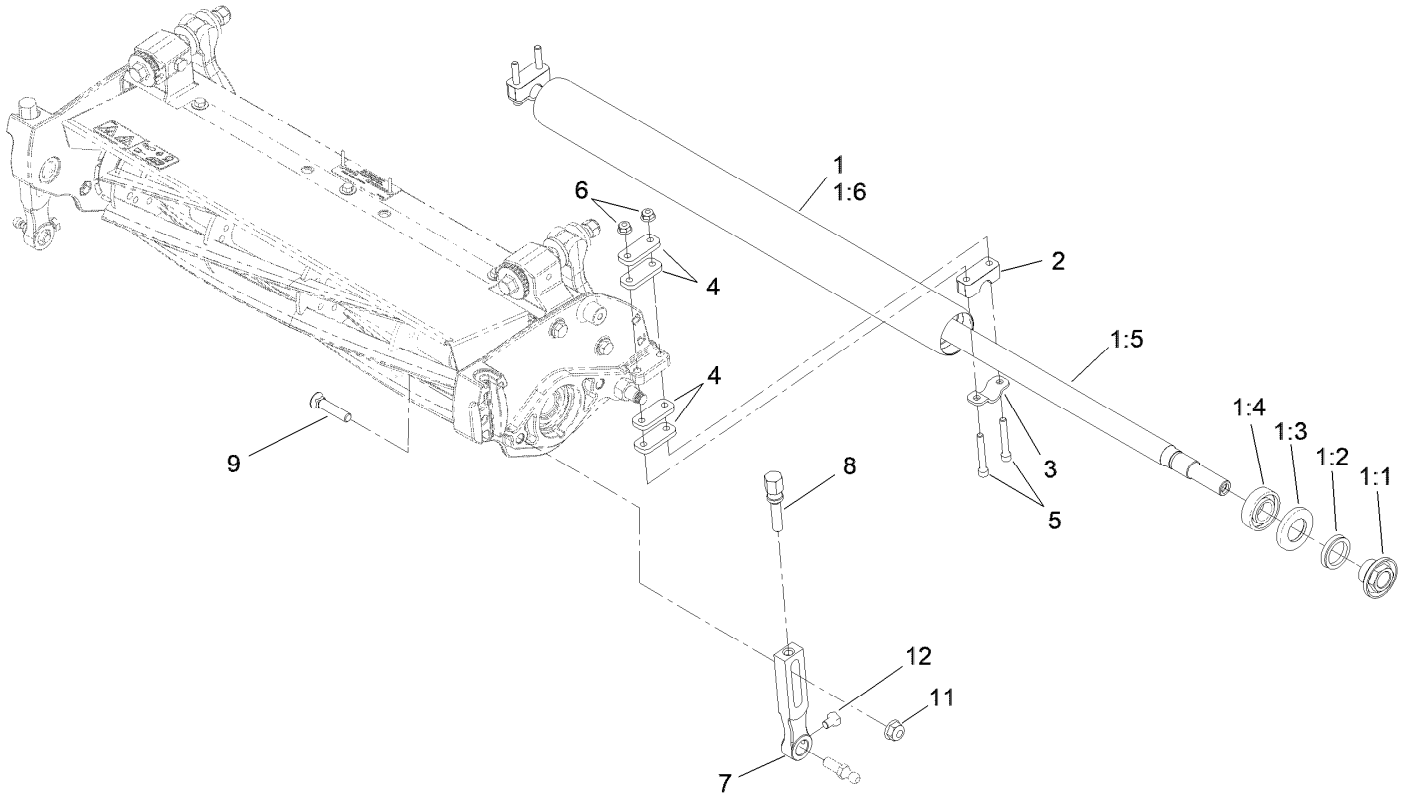

Rear Roller Assembly

Ref.	Part Number	Qty.	Description
1	140-5560	1	GR21 Steel Rear Roller ASM (2.0In)
1:1	108-3151	2	Nut-Lock, Bearing (Service)
1:2	106-6942	2	V-Ring
1:3	106-6941	2	Seal
1:4	251-347	2	Bearing-Ball
1:5	147-1347	1	Shaft-Roller (21In)
1:6	140-5541	1	Tube Roller 2.0In DIA X 22.15In
2	119-4166	2	Spacer-Height, Roller
3	119-4157	2	Retainer-Shaft
4	119-4165	8	Shim-Height, Roller
5	3274-54	4	Screw-HSH
6	119-4040	4	Nut-HF, NI
7	140-5691	2	Bracket-GR Front HOC
8	110-7352	2	Screw-HOC
9	99-3773	2	Bolt-Plow
11	133-7570	2	Nut-Flange, NI
12	119-4067	2	Screw-HH

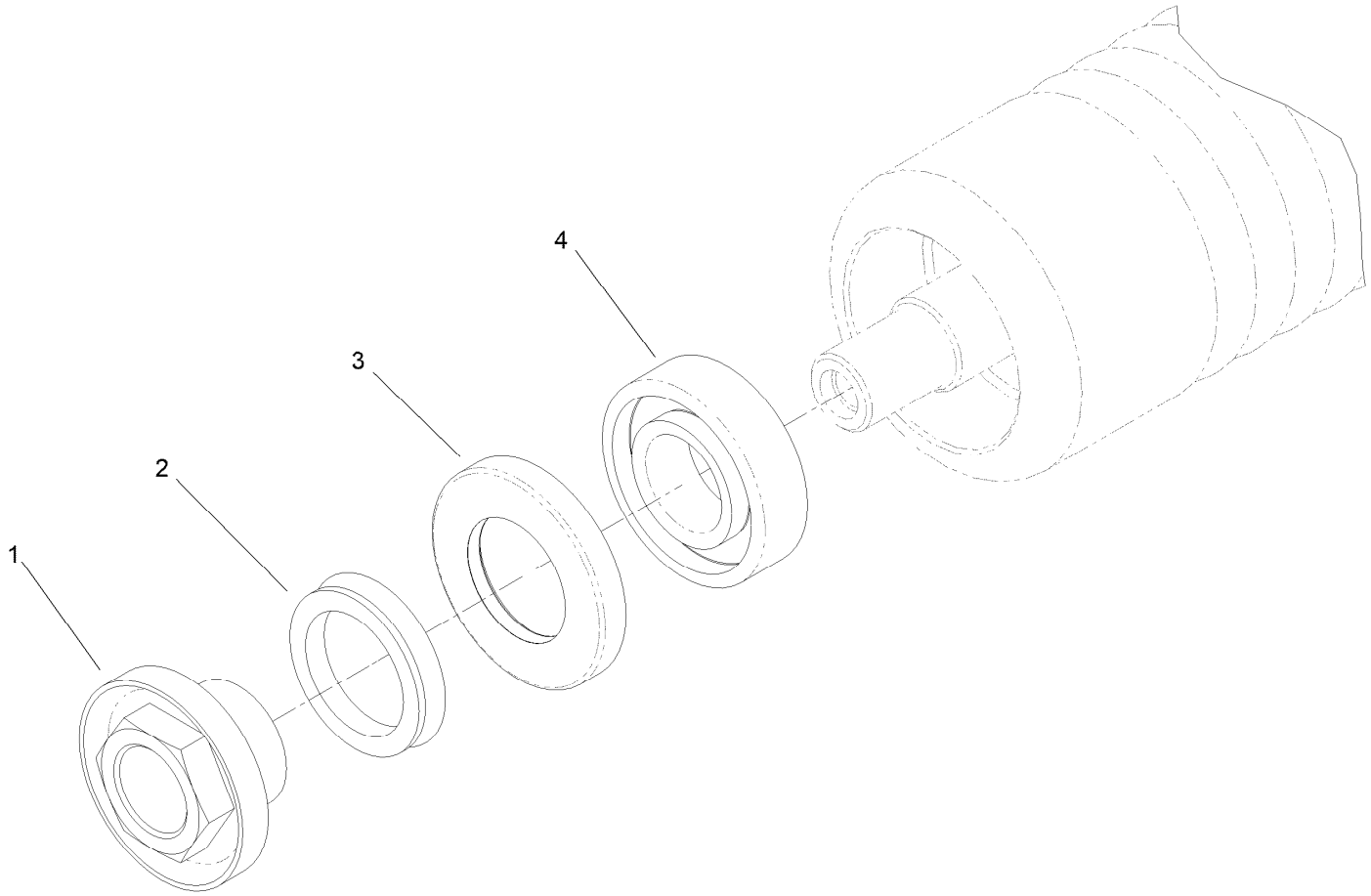

Roller Rebuild Kit Assembly No. 140-5552

Ref.	*Part Number*	*Qty.*	*Description*
1	108-3151	2	Nut-Lock, Bearing (Service)
2	106-6942	2	V-Ring
3	106-6941	2	Seal
4	251-347	2	Bearing-Ball

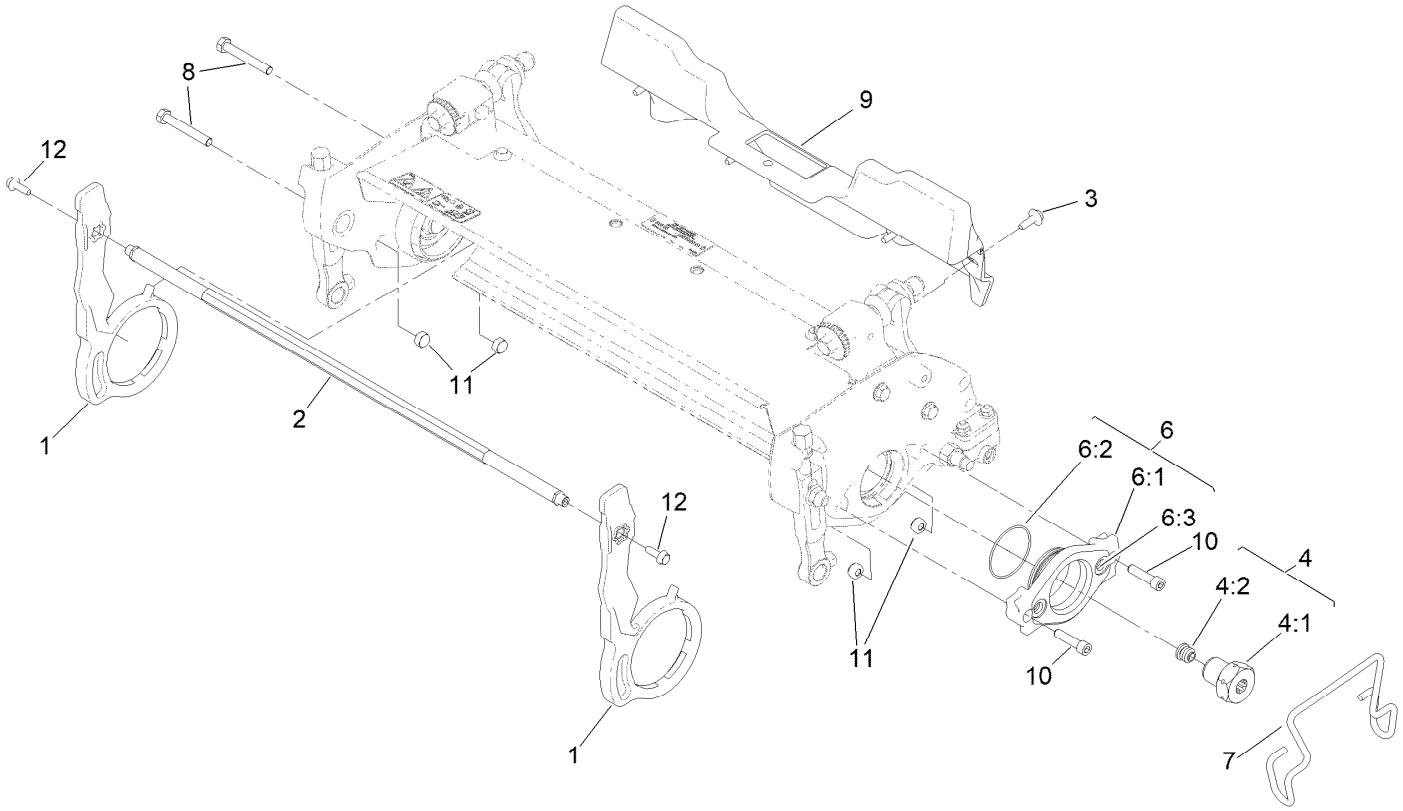

Pitch Arm and Weight Assembly

Ref.	Part Number	Qty.	Description
1	147-0901	2	Arm-Pitch
2	117-9456	1	Crosslink
3	119-4012	4	Screw-HWHTF
4	120-3221	1	LH Reel Nut ASM
4:1		1	Nut-Reel, Splined (LH) ●
4:2	120-3220	1	Plug-Plastic
6	115-5227	1	Motor Adapter ASM
6:1	115-3294	1	Adaptor-Motor
6:2	360-0398	1	O-Ring
6:3	237-22	2	O-Ring
7	117-6706	1	Clamp-Motor
8	322-11	2	Screw-HH
9	117-6849	1	Shield-Spring
10	3274-18	2	Screw-HSH
11	119-4038	4	Nut-Hex
12	131-6150	2	Screw-HWHTF

● Not serviced separately

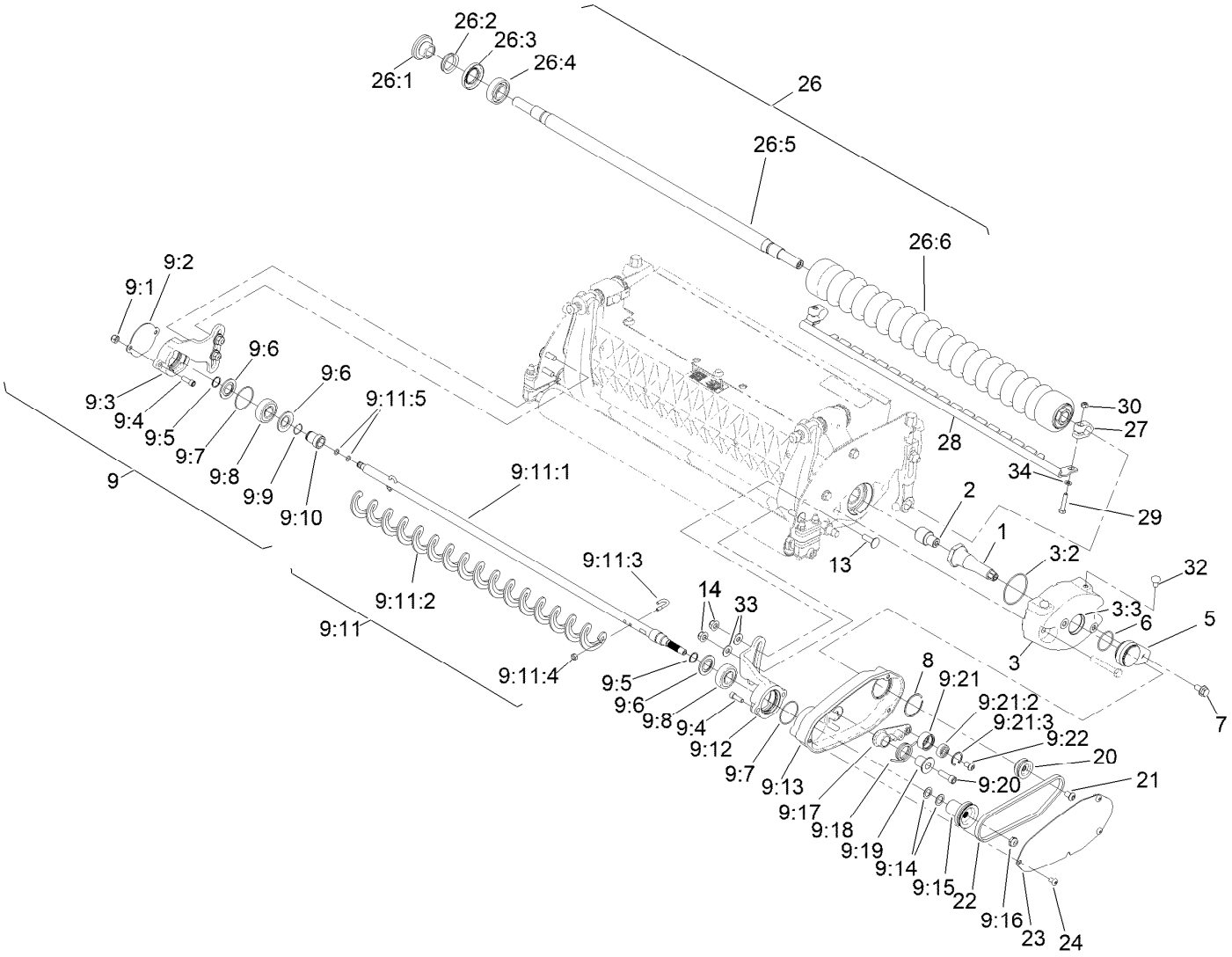

Roller Assembly

Ref.	Part Number	Qty.	Description
1	131-1842	1	Shaft-Drive
2	147-1040	1	Adapter-RH (GR)
3	115-3340	1	Weight ASM, GR
3:2	360-0398	1	O-Ring
3:3	121-4609	1	Plug-Expansion
5	131-1852	1	Adapter-Housing
6	119-1156	1	O-Ring
7	114-7728	1	Screw-HHF, Patch
8	131-1880	1	Ring-Retaining, EXT
9		1	GR RRB Sub-Assembly ●
9:1	3296-42	2	Nut-Lock, NI
9:2	131-1844	1	Cover-Bearing
9:3	131-1840	1	Bracket-Bearing, LH
9:4	3274-8	4	Screw-HSH
9:5	132-0716	2	Ring-Retaining, External
9:6	132-0700	3	Seal-Flocked
9:7	131-1864	2	O-Ring
9:8	132-0703	2	Bearing-Ball, Spherical

Ref.	Part Number	Qty.	Description
9:9	115-7143	1	Spring-Wave
9:10	132-0718	1	Collar-Shaft,Stepped
9:11	132-0724	1	Rollerbrush ASM
9:11:1	132-0702	1	Shaft-Brush
9:11:2	105-6792	1	Brush-Roller
9:11:3	104-1830	2	Bolt-J
9:11:4	3296-2	2	Nut-Lock, NI
9:11:5	132-0717	2	O Ring
9:12	131-1838	1	Bracket-Bearing, RH
9:13	120-2830	1	Housing-Drive, Brush
9:14	112-6957	2	Washer-Hardened
9:15	132-0701	1	Pulley-Driven
9:16	121-4600	1	Nut-Hex
9:17	131-1846	1	Idler-Drive
9:18	131-1848	1	Spring-Torsion
9:19	131-1847	1	Bushing-Idler
9:20	127-8633	1	Screw-HSH, Patch
9:21	161-7356	1	Pulley - Idler, ASM

● Not serviced separately

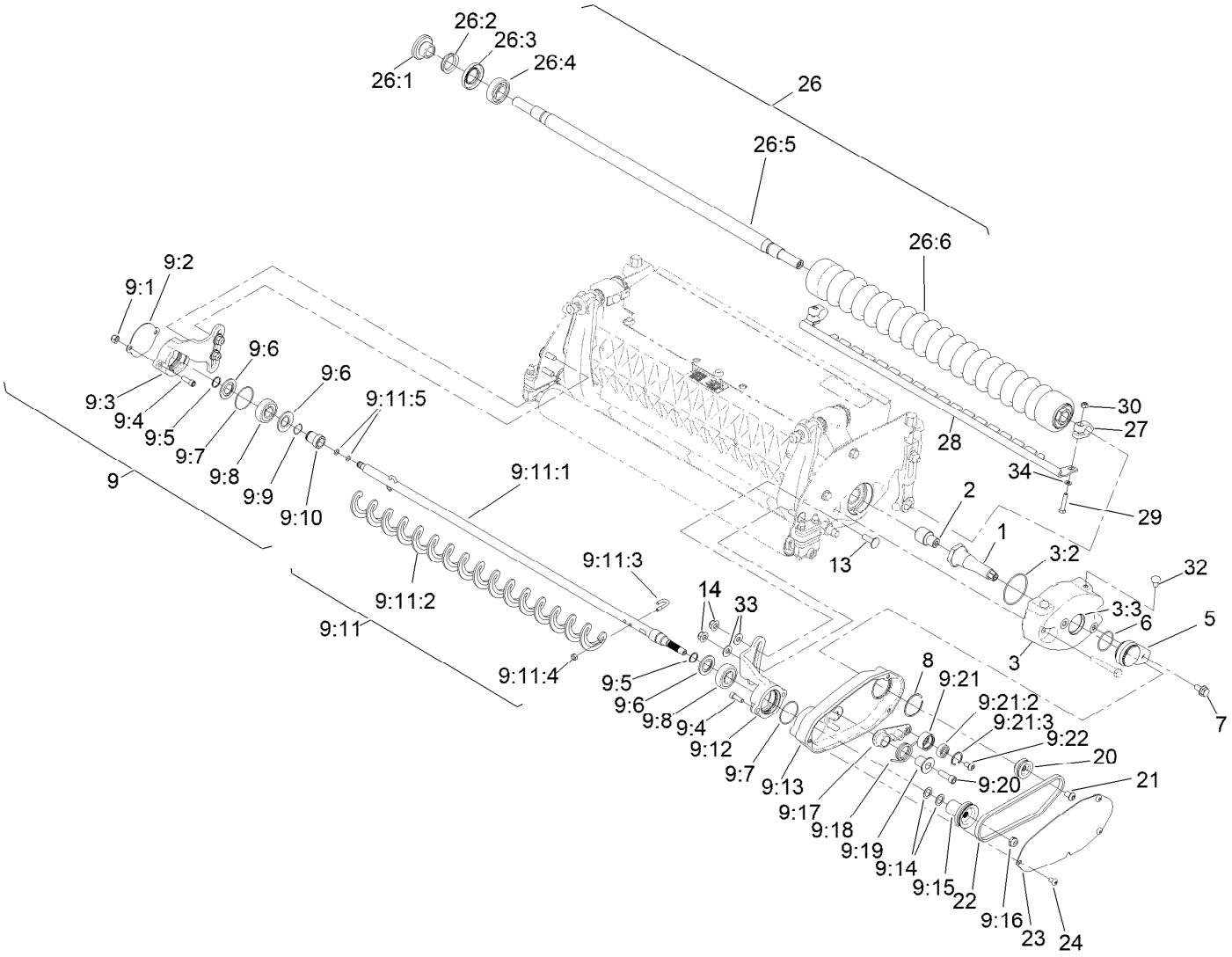

Roller Assembly (continued)

Ref.	Part Number	Qty.	Description
9:21:2	251-259	1	Bearing-Ball
9:21:3	104-4727	1	Ring-Retaining
9:22	131-1884	1	Screw-HSBH,Patch
13	3290-511	4	Screw-HSBH
14	104-8300	4	Nut-HF, NI
20	131-1855	1	Pulley-Drive
21	131-1884	1	Screw-HSBH,Patch
22	105-5720	1	Belt-V, Poly
23	131-1843-03	1	Cover-Drive, Belt
24	131-1883	3	Screw-HSBH
26	147-1215	1	GR21 Hhoc Wide Wiehle Roller ASM (Steel)
26:1	147-0701	2	Nut-Lock, Bearing
26:2	106-6942	2	V-Ring
26:3	106-6941	2	Seal
26:4	251-347	2	Bearing-Ball
26:5	147-1347	1	Shaft-Roller (21In)
26:6	147-1213	1	Tube-Roller, Hhoc Wide Wiehle(21In,Cz)
27	115-7364	2	Block-Clamp, Scraper
28	147-1330-03	1	Scraper-Wiehle, GR (21In) [black]
29	115-7372	2	Screw-HH
30	115-7373	2	Nut-Lock
32	119-4067	2	Screw-HH
33	98-3499	4	Washer-Flat
34	33093-00	2	Washer-Flat

● Not serviced separately

Attachments and Accessories

For 04658 — 11-Blade EdgeSeries DPA Cutting Unit Greensmaster 3300, 3400, or 3360 with GeoLink Mow Series Traction Unit

Product Name	Model/Part
Narrow Wiehle Roller (Qty 1)	04255
Wide Wiehle Roller (Qty 1)	04256
Front Full Smooth Roller (Qty 1)	04257
Extended Narrow Wiehle Roller (Qty 1)	04258
Paspalum Wiehle Roller (Qty 1)	04267
Turf Evaluator	04399
Steel Roller (Qty 1)	04628
Steel Roller Asm	107-3509
Narrow Wiehle Steel Roller Asm	107-3510
Wide Wiehle Steel Roller Asm	107-3514
Narrow Wiehle Roller Kit	115-7360
Front Brush for Narrow Wiehle Roller (Qty 1)	115-7377
Front Brush for Wide Wiehle Roller (Qty 1)	115-7378
Front Brush for Full Roller (Qty 1)	115-7379
Front Comb for Narrow Wiehle Roller (Qty 1)	115-7380
Front Comb for Wide Wiehle Roller (Qty 1)	115-7381
Front Comb for Full Roller (Qty 1)	115-7382
Wide Wiehle Roller Kit	115-7386
Rear Roller Adjustment (Qty 1)	120-9602
Rear Roller Scraper (Qty 1)	121-2260
Extended Wiehle Roller Kit	121-4675
Paspalum Wiehle Roller	121-9535
Front Scraper for Narrow Wiehle Roller (Qty 1)	125-3503
Front Scraper for Wide Wiehle Roller (Qty 1)	125-3504
Front Scraper for Full Roller (Qty 1)	125-3505
GR Roller Rebuild Kit	140-5552
Roller Rebuild Tool Kit, Greensmaster Cutting Units	140-5553
Full Rear Roller(2.0in Dia)(21in)	140-5560
Cast Iron Wiehle Roller (Qty 1)	71-1550
Height-of-Cut Bar	94-9010



Count on it.