Form No. 3481-901 Rev A

Seat Conversion Kit

Workman® GTX Utility Vehicle

Model No. 164-4550

Installation Instructions

Preparing the Machine

1. Park the machine on a level surface.
2. Engage the parking brake (if applicable).
3. Shut off the engine and remove the key (if applicable).

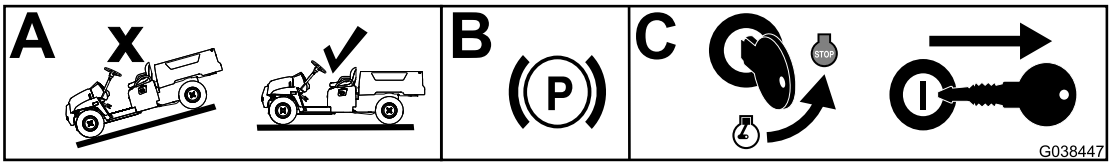

g038447

Figure 1

Preparing the Seat Base

1. Remove and retain the driver and passenger hand-holds, nuts, and bolts.

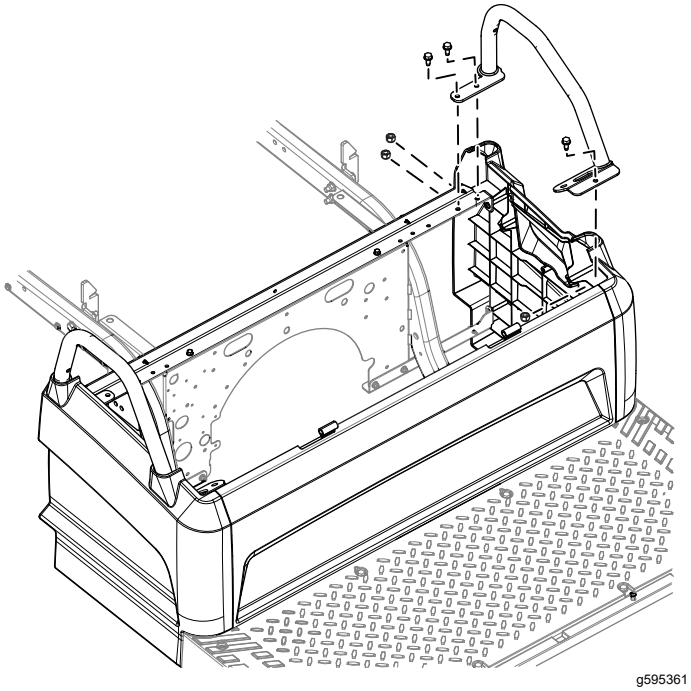

g595361

Figure 2
Left side shown

© 2026—The Toro® Company
8111 Lyndale Avenue South
Bloomington, MN 55420

Register at www.Toro.com.

Original Instructions (EN)
Printed in the USA
All Rights Reserved

3481-901

2. Remove and discard the front and the rear seat bracket. Retain the removed push rivets, screws, nuts, and bolts.

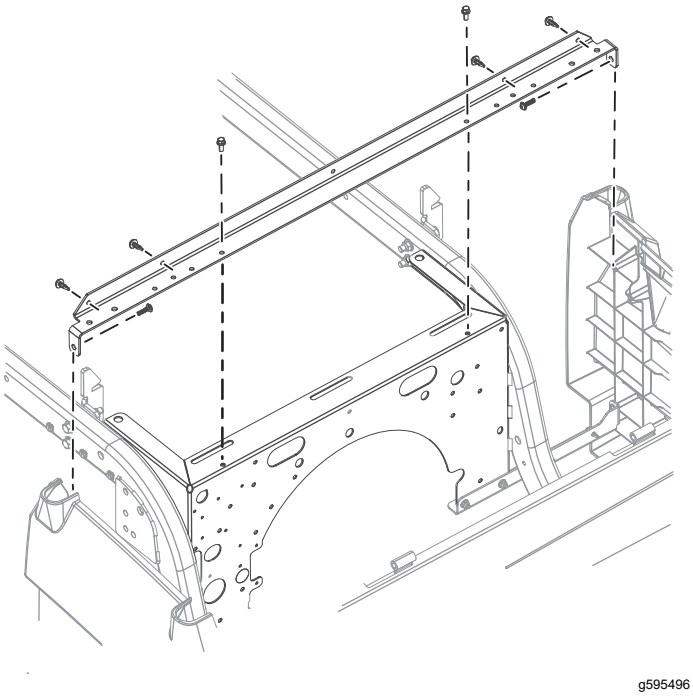

g595496

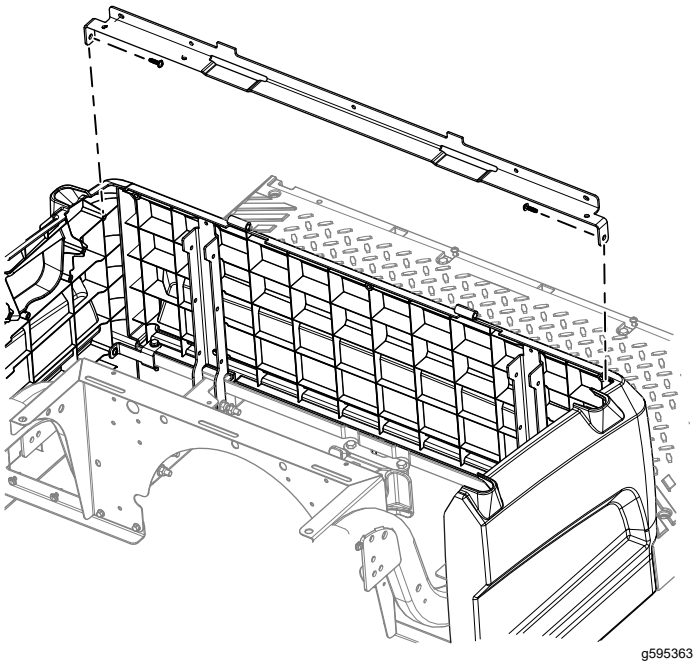

g595363

Figure 3

3. Drill 4 holes (13/64 inch) in the front panel of the seat base.

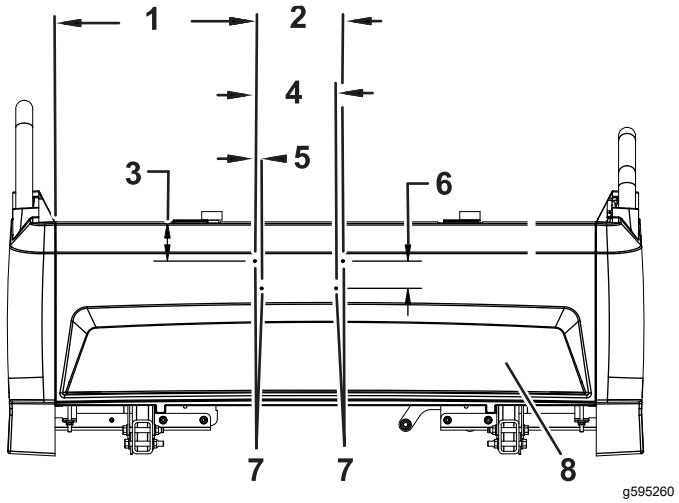

g595260

Figure 4

Front panel of the seat base

1. 14.75 inches
2. 6.5 inches
3. 2.9 inches
4. 6 inches
5. 0.5 inch
6. 2 inches
7. Holes (13/64 inch)
8. Front panel

4. Using the kits rear seat bracket as a template, drill 2 holes (9/32 inch) in the rear panel of the seat base.

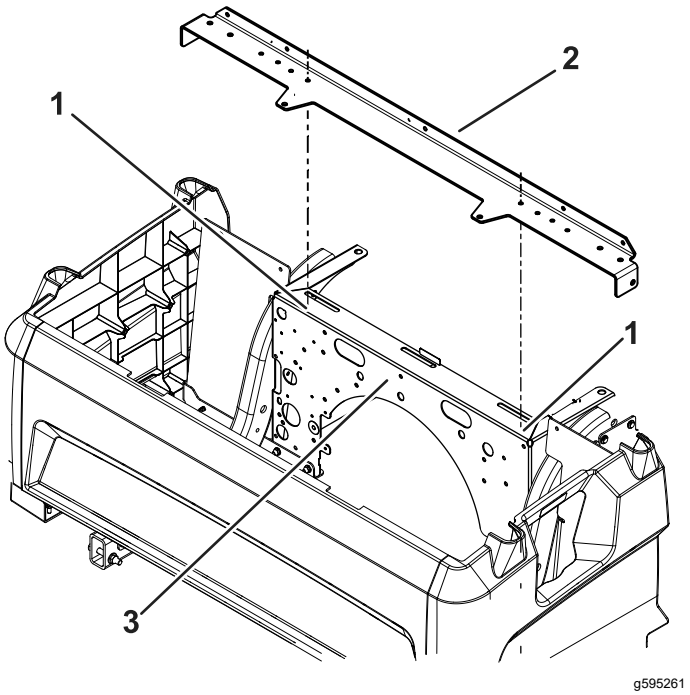

g595261

Figure 5

Seat Base

1. Holes (9/32 inch)
2. Rear bracket
3. Rear panel

Installing the Seat Brackets

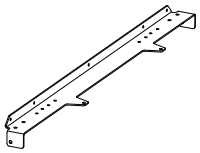

1x

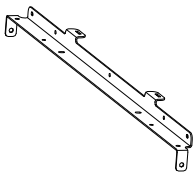

1x

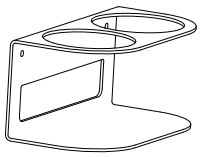

1x



1x

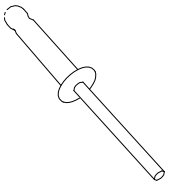

4x

1. Install the kit rear seat bracket with the 2 previously removed screws and the 2 previously removed nuts and bolts from the rear seat bracket (Figure 6). Torque the nuts and bolts to 11.3 N·m (100 in-lb). Torque the screws to 2.2 N·m (20 in-lb).
2. Install the kit front seat bracket with the 2 previously removed screws (Figure 6). Torque the screws to 2.2 N·m (20 in-lb).
3. Install the previously removed driver and passenger hand-holds with the previously removed nuts and bolts (Figure 6). Torque the nuts and bolts to 24.4 N·m (18 ft-lb).
4. Install the 4 previously removed push rivets (Figure 6).
5. Install the cup holder bracket and divider to the front of the seat base with the 4 pop rivets.

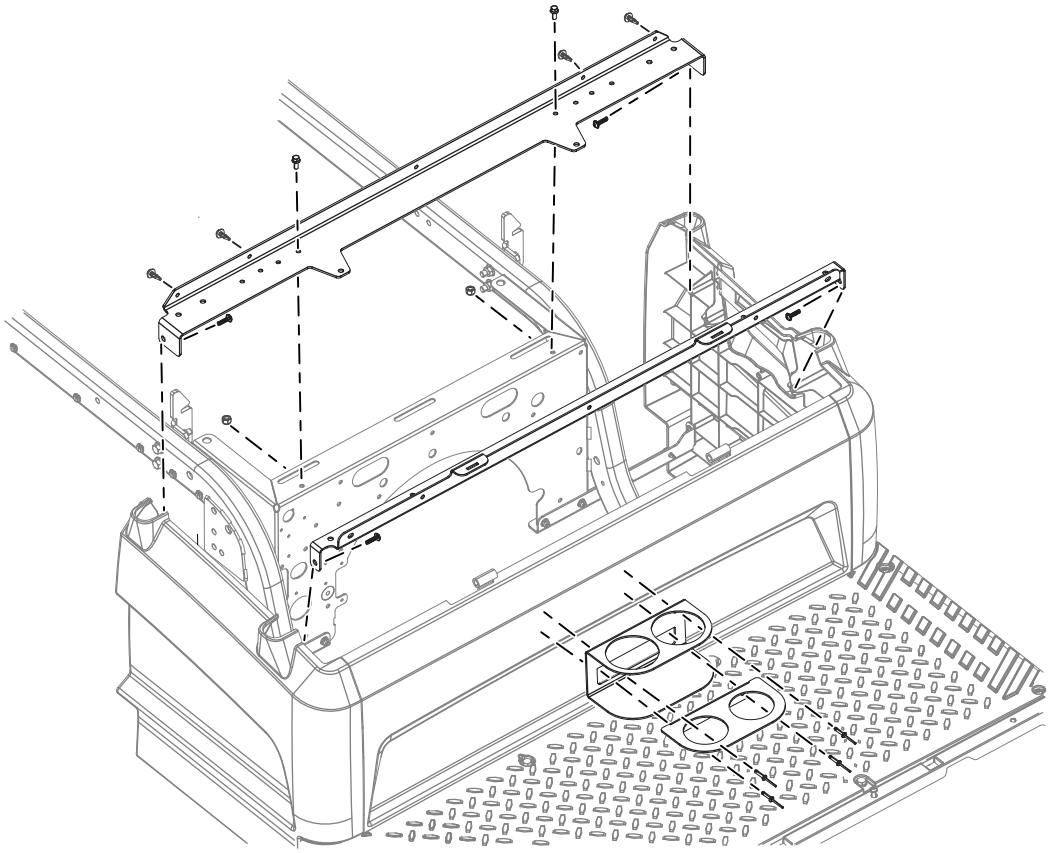

g595376

Figure 6



Count on it.