Form No. 3481-914 Rev A

TORO®

Count on it.

Parts Catalog

Seat Conversion Kit

Workman® GTX Utility Vehicle

Model No. 164-4550

Register at www.Toro.com.
Original Instructions (EN)

CE

3481-914 A

Seat Conversion Kit Assembly No. 164-4550

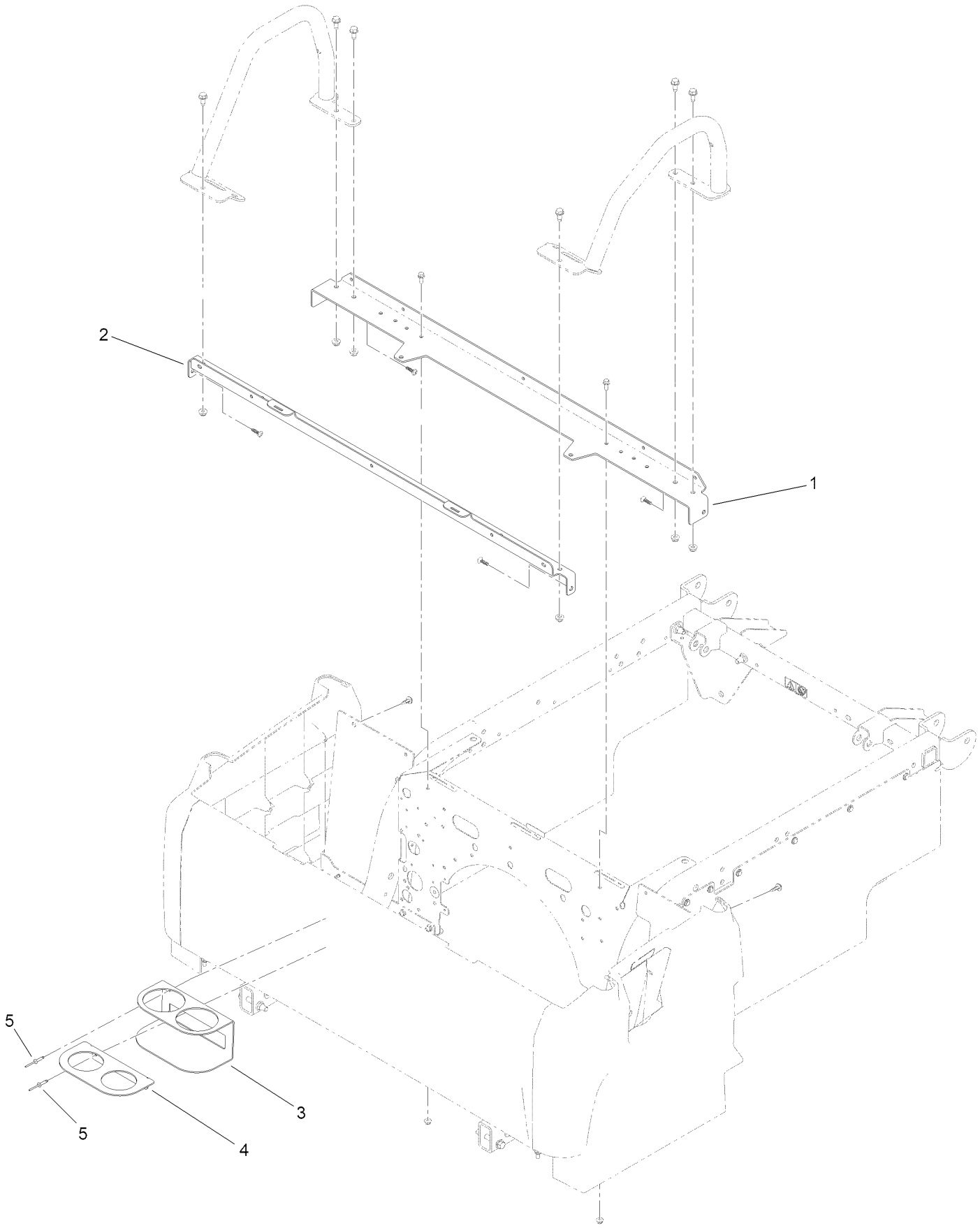

Seat Conversion Kit Assembly No. 164-4550 (continued)

Ref.	Part Number	Qty.	Description
1	163-5086-03	1	Support-Rear, Seat
2	163-3765-03	1	Support-Front, Seat
3	133-7122-05	1	Bracket-Holder, Cup
4	133-7133-05	1	Bracket-Divider, Cup Holder
5	133-7130	4	Rivet-Pop



Count on it.