Form No. 3481-933 Rev A

TORO®

Count on it.

Parts Catalog

Fuel Tank Kit

Greensmaster® 3400 or 3420 TriFlex® Traction Unit

Model No. 164-5503

Register at www.Toro.com.
Original Instructions (EN)

CE

3481-933 A

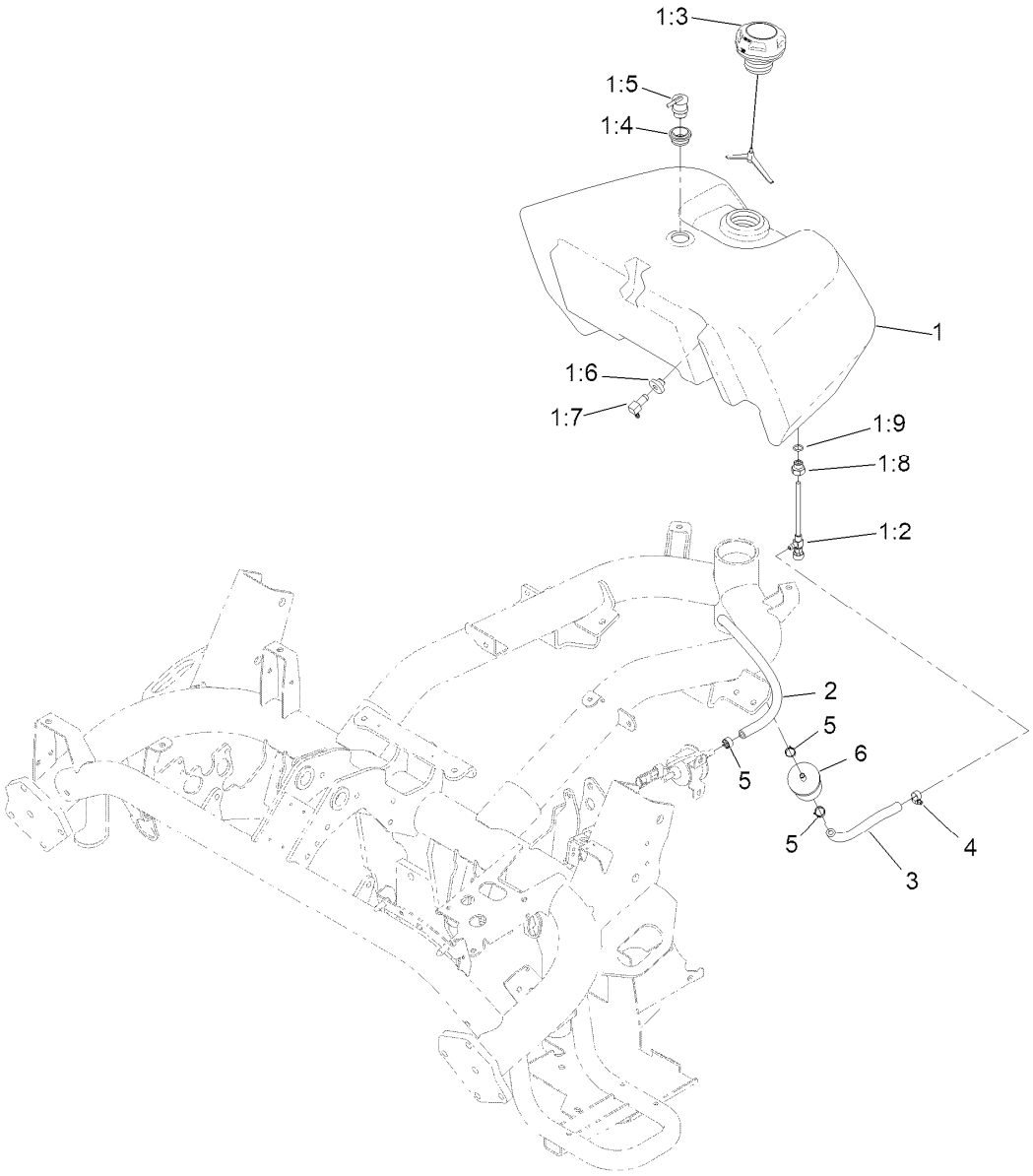

Fuel Tank Kit Assembly No. 164-5503

Ref.	*Part Number*	*Qty.*	*Description*
1	161-4671	1	Fuel Tank ASM, Diesel
1:2	114-4679	1	Fitting-Shut Off, Fuel
1:3	161-4680	1	Cap-Diesel, No Vent
1:4	114-0284	1	Grommet
1:5	119-3547	1	Valve-Vent, Fuel
1:6	46-6560	1	Bushing
1:7	104-5228	1	Fitting-Elbow, 90 DEG
1:8	161-4703	1	Adapter
1:9	237-42	1	O-Ring
2	110-8752	1	Hose-Fuel
3	126-7503	1	Hose-Fuel
4	2412-108	1	Clamp-Worm
5	92-2379	3	Clamp-Hose
6	98-7612	1	Filter-Fuel