FORM NO. 3312-642

TORO®

MODEL NO. 62912 — 6000001 & UP
MODEL NO. 62923 — 6000001 & UP

PARTS CATALOG

5 H.P. LAWN VACUUM, H.P. & S.P.

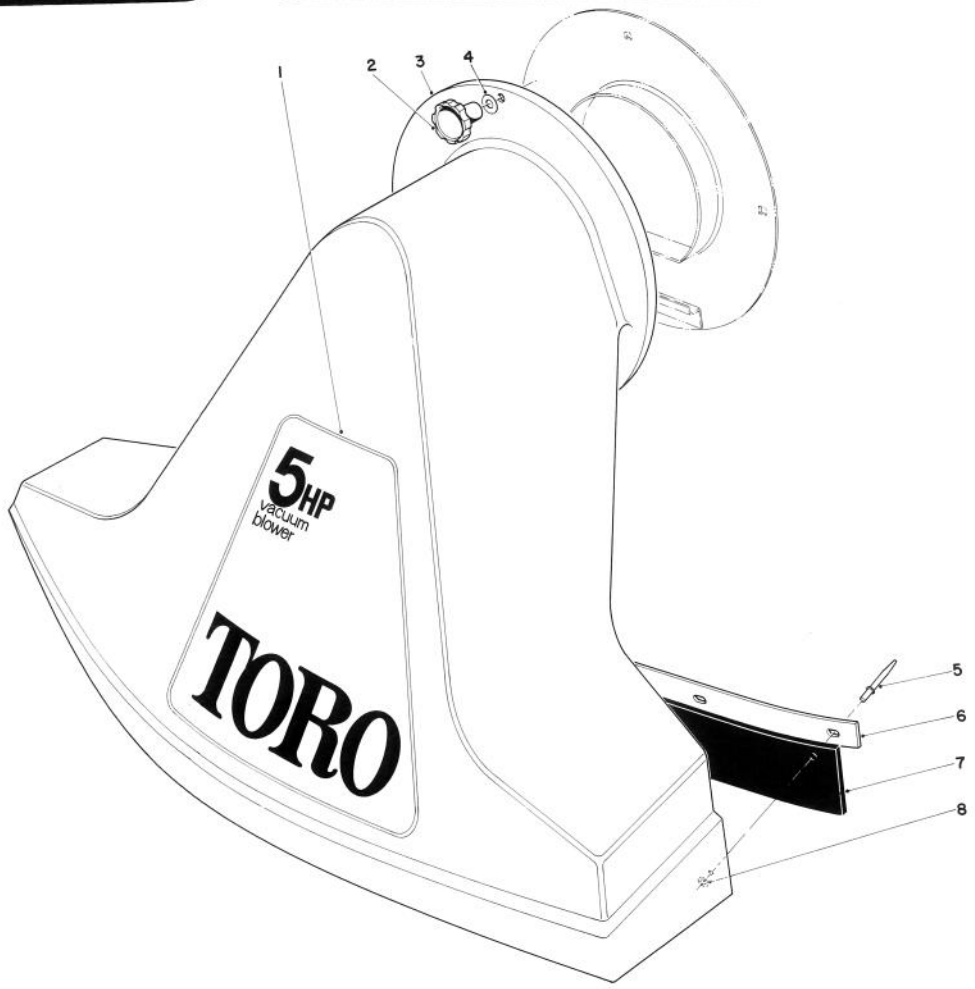

SNOUT ASSEMBLY (Models 62912 & 62923)

Ref. No.	Part No.	Description	No. Used
1	20-9810	Decal — Toro Vacuum Model No. 62912	1
*	20-6990	Decal — Toro Vacuum Model No. 62923	1
2	19-4050	Handle Release	1
3	40-7000	Snout Assembly (Incl. Ref. #5-8)	1

Ref. No.	Part No.	Description	No. Used
4	3-3391	Washer	1
5	3290-417	Pop Rivet	5
6	20-6840	Flap Clamp	1
7	20-6830	Rubber Flap	1
8	3256-51	Washer	5

*Not Illustrated

®The Toro Company — 1985

PRICE $1.00

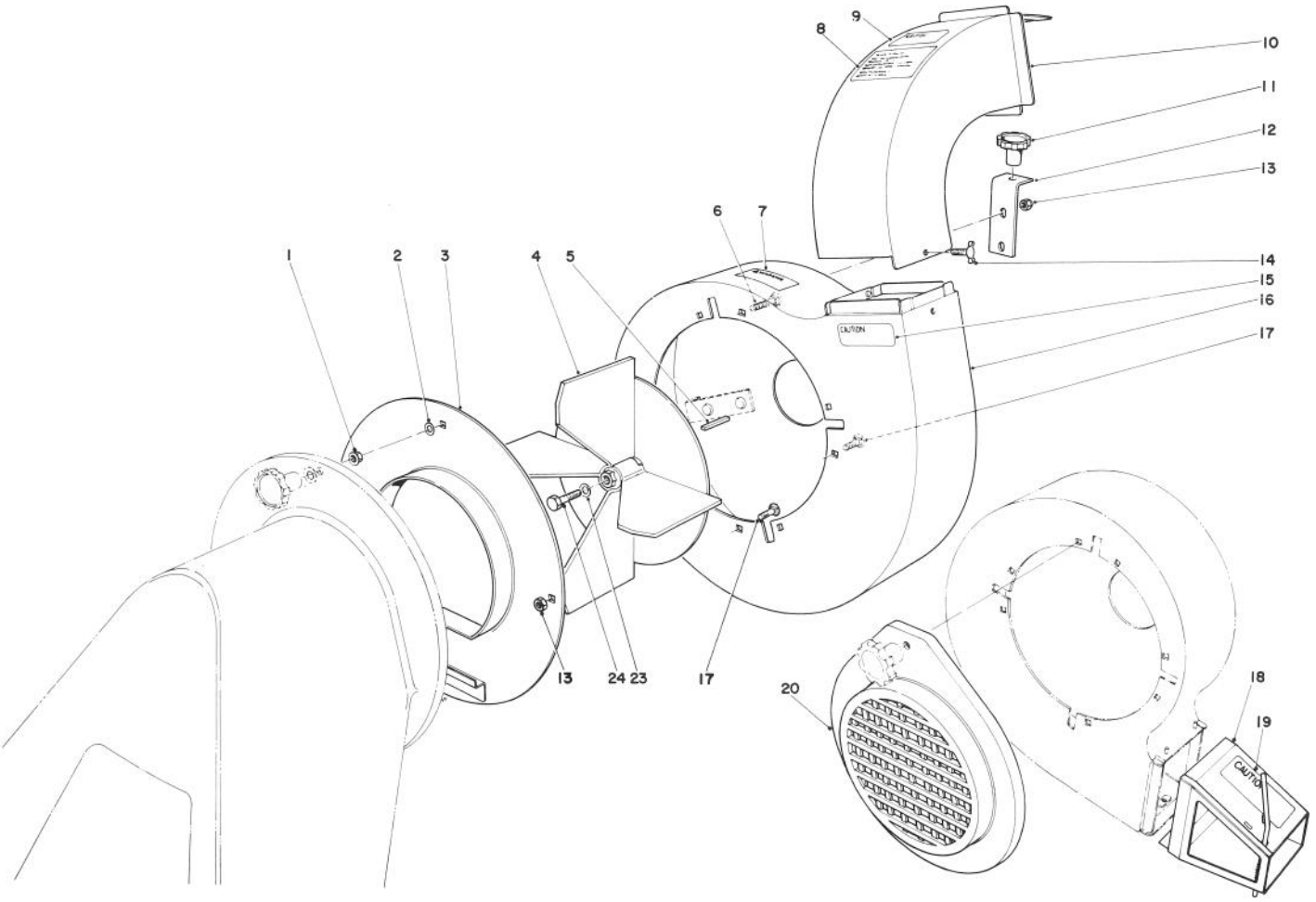

BLOWER ASSEMBLY (Model 62912 & 62923)

Ref. No.	Part No.	Description	No. Used
1	32128-26	Flange Nut	1
2	3256-25	Washer – Flat	3
3	20-5450	Blower Cover	1
4	37-9230	Fan	1
5	7-0036	Key	1
6	3230-4	Carriage Bolt	1
7	37-9250	Decal – Warning Rotation	1
8	20-7000	Decal – Toro Advertising	1
9	20-8710	Decal – Caution Bag	1
10	20-6130	Vacuum Chute	1
11	19-4050	Knob – Handle Release	1

Ref. No.	Part No.	Description	No. Used
12	39-4660	Mounting Bracket Housing	2
13	32152-1	Locknut	7
14	3288-6	Wing Screw	1
15	20-7010	Decal – Warning	1
16	20-5890	Blower Housing	1
17	3230-19	Carriage Bolt	3
18	20-6570	Blower Exhaust (Incl. Ref. #19)	1
19	20-7900	Decal – Exhaust	1
20	20-5780	Blower Intake	1
23	3253-4	Lockwasher	1
24	40-6990	Screw – Special	1

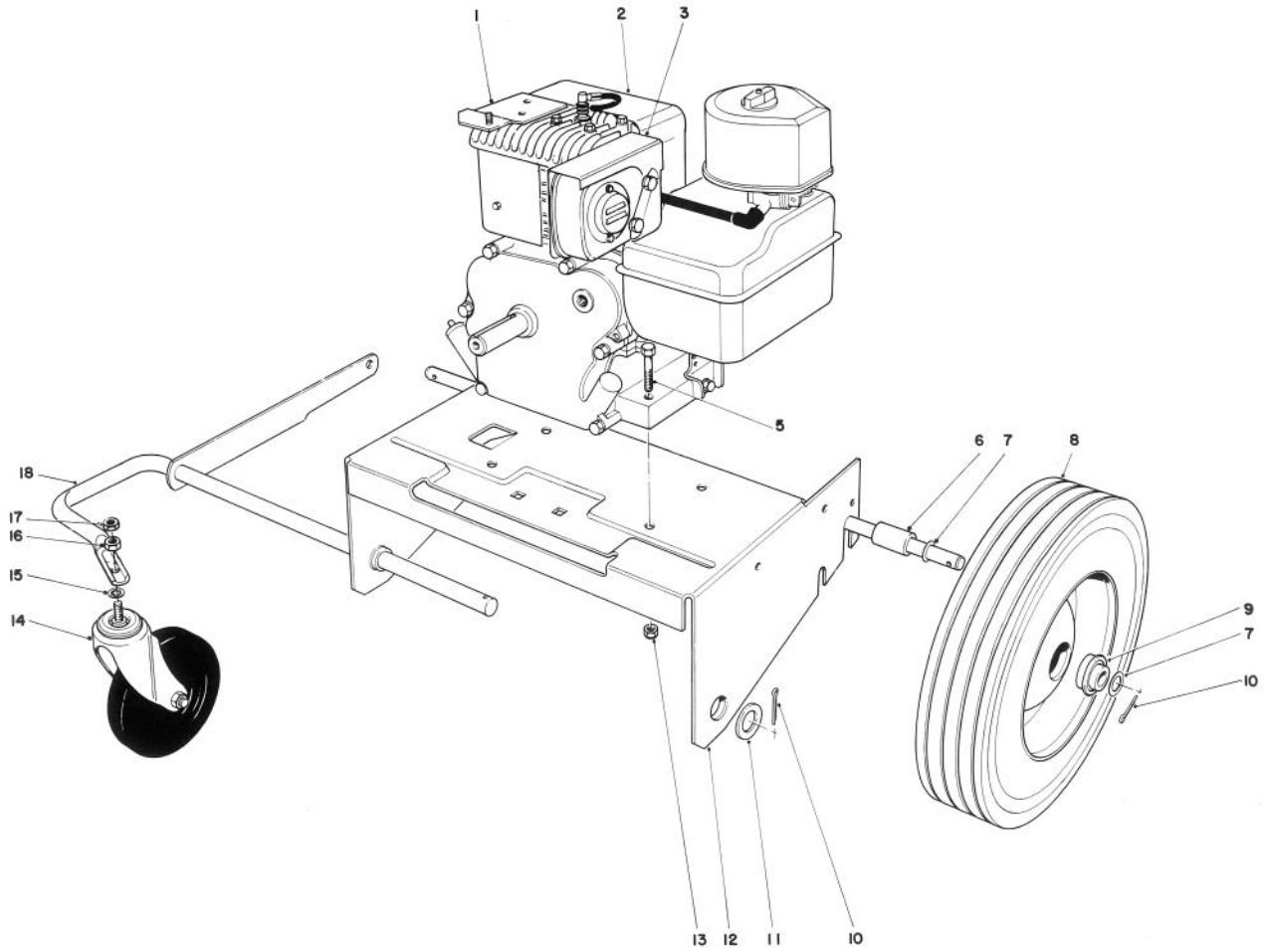

ENGINE AND BASE ASSEMBLY (Model 62912)

Ref. No.	Part No.	Description	No. Used
1	39-4680	Mounting Bracket	1
2	221-643	Engine	1
3	39-4690	Heat Shield-Muffler	1
5	322-7	Capscrew	4
6	20-5410	Spacer – Axle	2
7	7-3590	Flatwasher	4
8	20-6100	Wheel (Incl. Ref. #9)	2
9	251-258	Bearing	4
10	3272-17	Cotter Pin	3

Ref. No.	Part No.	Description	No. Used
11	3256-29	Flat Washer	1
12	20-5560	Engine Plate	1
13	32152-1	Locknut	4
14	23-3320	Caster	1
15	3254-4	Lockwasher Internal Tooth	1
16	3217-9	Nut	1
17	32152-3	Locknut	1
18	23-3280	Front Wheel Support	1

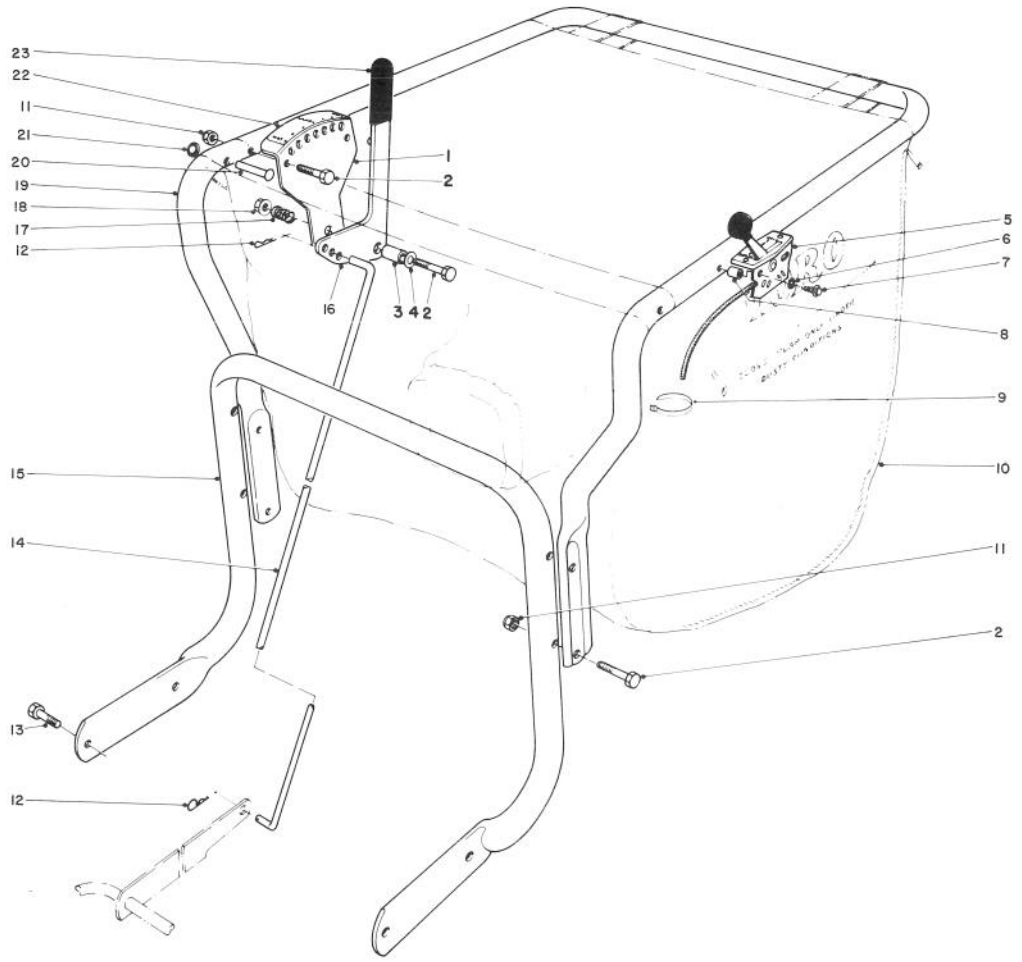

CONTROLS AND HANDLE ASSEMBLY (Model 62912)

Ref. No.	Part No.	Description	No. Used
1	20-5820	Adjustment Bracket	1
2	322-7	Capscrew	7
3	20-5650	Spacer – Adjustment	1
4	3256-3	Flat Washer	1
5	23-3610	Throttle Control	1
6	3255-17	Lockwasher	2
7	32104-72	Screw – Self Tapping	2
8	23-3620	Spacer	2
9	3290-378	Cable Tie	1
10	20-6090	Bag – Vacuum	1
11	32152-1	Locknut	10
12	3290-250	Hair Pin Cotter	2

Ref. No.	Part No.	Description	No. Used
13	322-4	Capscrew	4
14	33-2410	Connector Rod	1
15	20-5810	Lower Handle	1
16	23-3410	Handle – Height Adjustment	1
17	20-6110	Spring – Height Adjustment	1
18	32128-13	Flange Nut	1
19	23-3570	Handle Upper	1
20	3263-9	Rivet	2
21	3290-418	Push Nut	2
22	20-6880	Decal – Height Adjustment	1
23	3-7877	Grip Handle	1

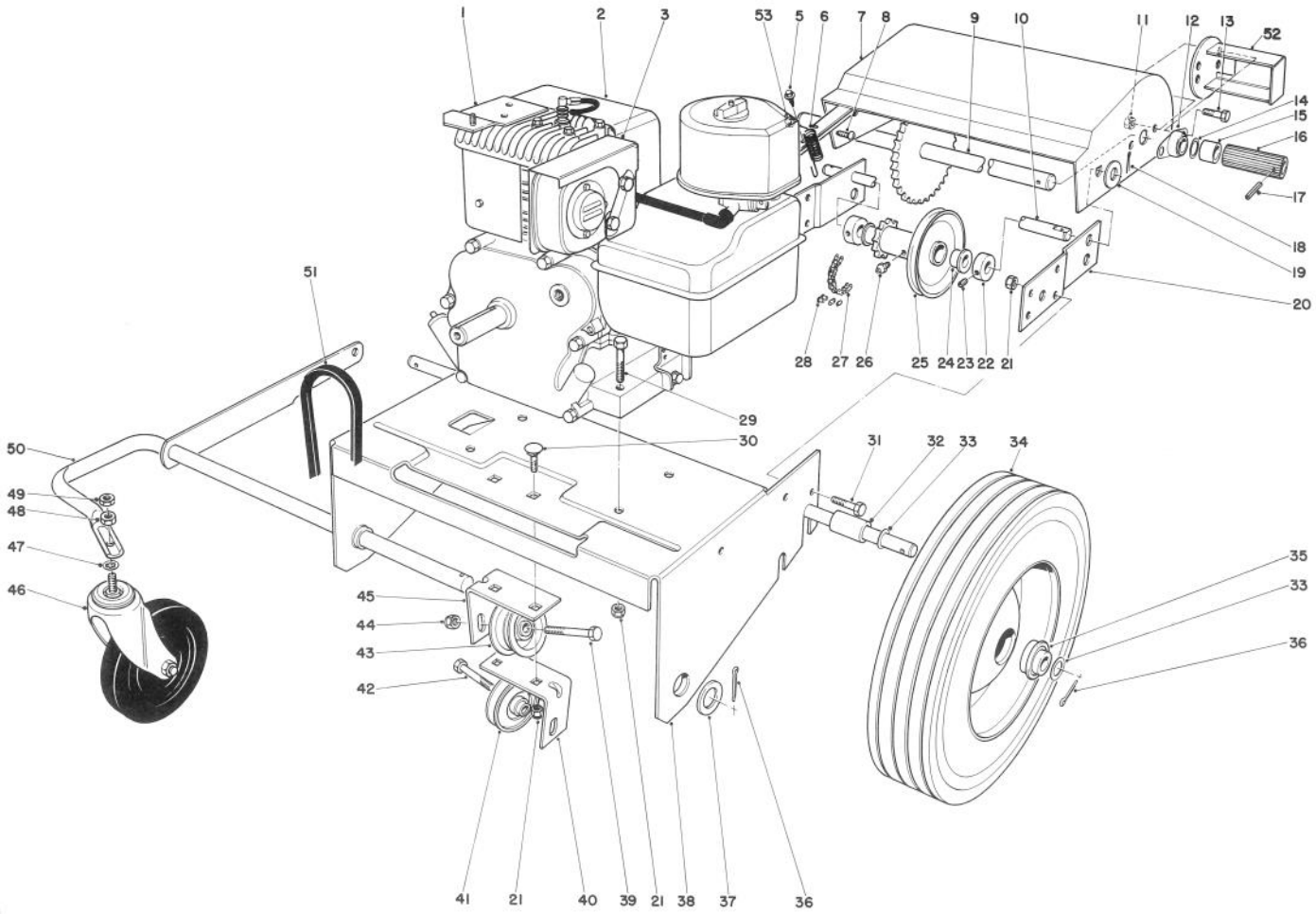

ENGINE AND BASE ASSEMBLY (Model 62923)

Ref. No.	Part No.	Description	No. Used
1	39-4680	Mounting Bracket	1
2	221-643	Engine	1
3	39-4690	Heat Shield – Muffler	1
5	32140-32	Screw Self Tapping	1
6	23-3520	Spring – Traction	1
7	20-6040	Guard	1
8	3290-111	Screw	1
9	20-7270	Shaft Friction	1
10	20-5870	Shaft	1
11	3296-29	Nut	4
12	256-236	Bearing	2
13	322-2	Hex Hd. Capscrew	4
14	7-3590	Washer	2
15	20-5460	Spacer	2
16	20-5960	Friction Wheel	2
17	32121-4	Roll Pin	2
18	3272-7	Cotter Pin	2
19	3256-26	Washer	2
20	43-6830	Bracket Mounting	2
21	32152-1	Locknut	10
22	20-5950	Set Screw Collar (Incl. Ref. #23)	2
23	3245-1	Set Screw	2
24	256-105	Flange Bushing	2

Ref. No.	Part No.	Description	No. Used
25	20-6000	Idler Assembly (Incl. Ref. #24 & 26)	1
26	302-5	Grease Fitting	1
27	3-3434	Traction Chain (Incl. Ref. #28)	1
28	2710-31	Connecting Link	1
29	322-7	Capscrew	4
30	3230-20	Carriage Bolt	2
31	322-4	Capscrew	4
32	20-5410	Spacer Axle	2
33	7-3590	Flat Washer	5
34	20-6100	Wheel (Incl. Ref. #35)	2
35	251-258	Bearing	4
36	3272-17	Cotter Pin	3
37	3256-29	Flat Washer	1
38	20-5560	Engine – Plate	1
39	323-10	Capscrew	1
40	20-8690	Idler Mounting Bracket L.H.	1
41	12-5820	Idler Pulley	1
42	323-19	Capscrew	1
43	12-6700	Pulley Idler	1
44	32152-2	Locknut	2
45	20-8680	Idler Mounting Bracket R.H.	1
46	23-3320	Caster	1

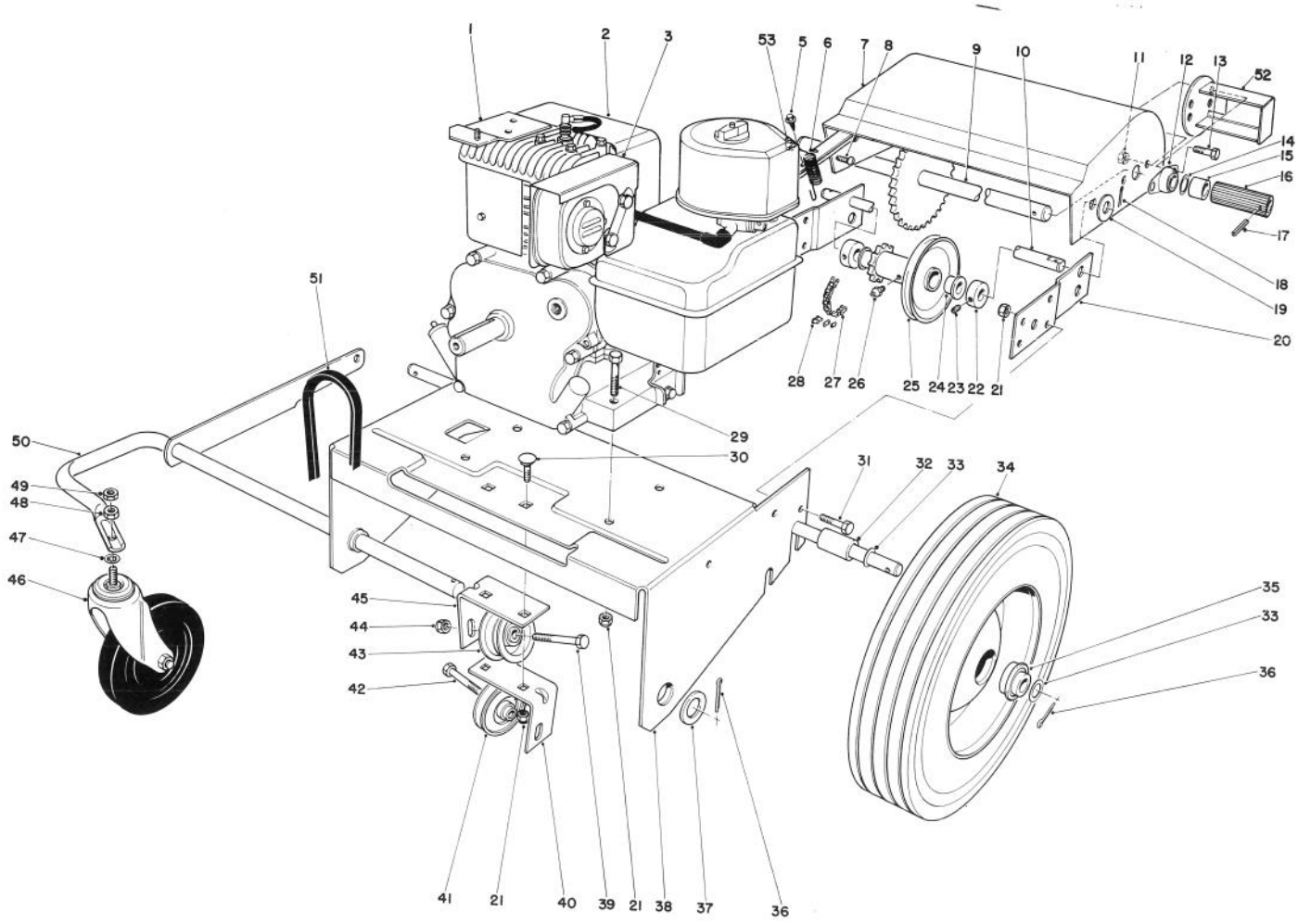

ENGINE AND BASE ASSEMBLY (Model 62923) (Continued)

Ref. No.	Part No.	Description	No. Used
47	3254-4	Lock Washer Internal Tooth	1
48	3217-9	Nut	1
49	32152-3	Locknut	1
50	23-3280	Front Wheel Support	1

Ref. No.	Part No.	Description	No. Used
51	20-5990	V-Belt	1
52	37-9210	Guard	2
53	32149-7	Nut	1

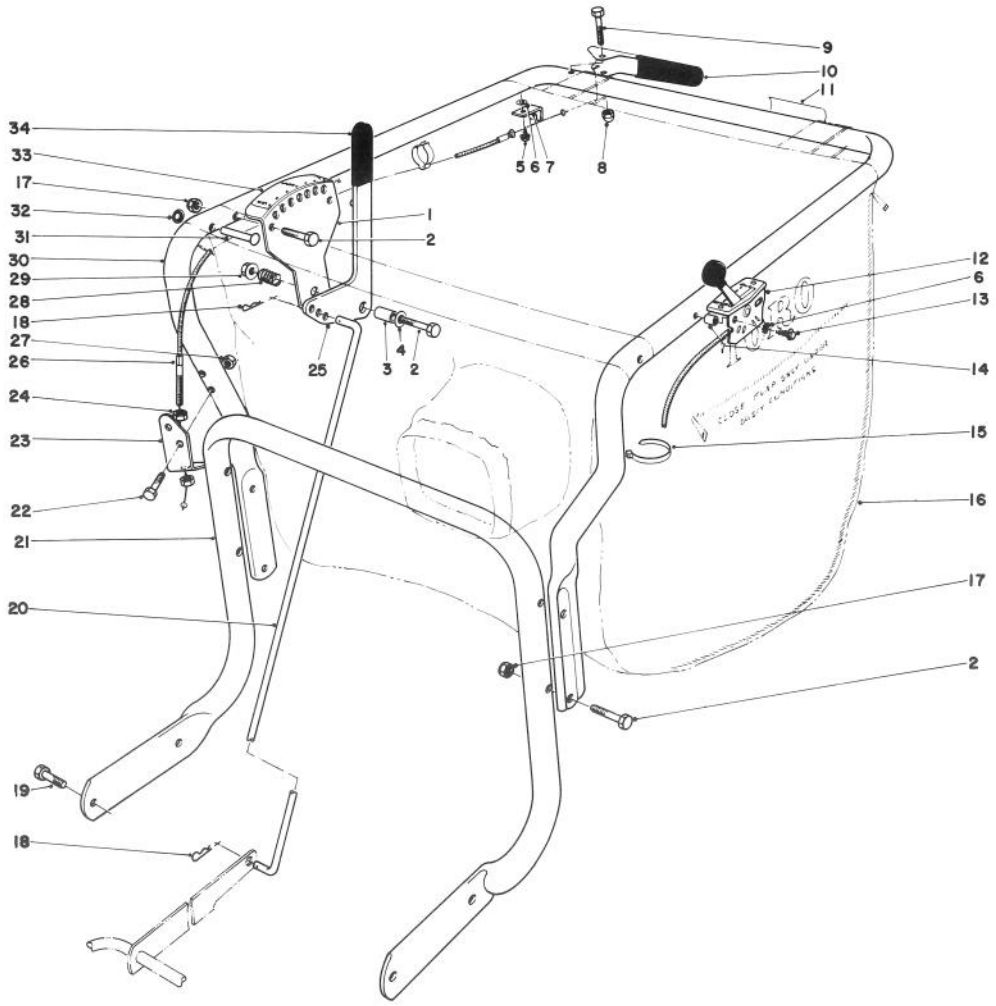

CONTROLS AND HANDLE ASSEMBLY (Model 62923)

Ref. No.	Part No.	Description	No. Used
1	20-5820	Bracket Adjustment	1
2	322-7	Capscrew	7
3	20-5650	Spacer Adjustment	1
4	3256-3	Washer – Plain	1
5	12-5450	Screw – Special	1
6	3255-17	Washer External Tooth	3
7	20-8780	Clip – Retaining	1
8	32111-7	Nut – Cap	1
9	321-10	Capscrew	1
10	25-7880	Lever	1
11	20-8700	Decal – Traction Control	1
12	23-3610	Throttle Control	1
13	32104-72	Screw – Self Tapping	2
14	23-3620	Spacer	2
15	3290-378	Cable Tie	2
16	20-6090	Bag – Vacuum	1
17	32152-1	Locknut	6

Ref. No.	Part No.	Description	No. Used
18	3290-250	Hair Pin Cotter	2
19	322-4	Capscrew	2
20	33-2410	Connector Rod	1
21	20-5810	Lower Handle	1
22	321-9	Hex Hd. Capscrew	2
23	33-2830	Bowden Mount	1
24	32149-5	Nut	2
25	23-3410	Handle – Height Adjustment	1
26	25-7860	Bodine Cable	1
27	32152-4	Locknut	2
28	20-6110	Spring – Height Adjustment	1
29	32128-13	Flange Nut	1
30	23-3570	Handle – Upper	1
31	3263-9	Rivet Round Head	2
32	3290-418	Push Nut	2
33	20-6880	Decal – Height Adjustment	1
34	3-7877	Grip Handle	1

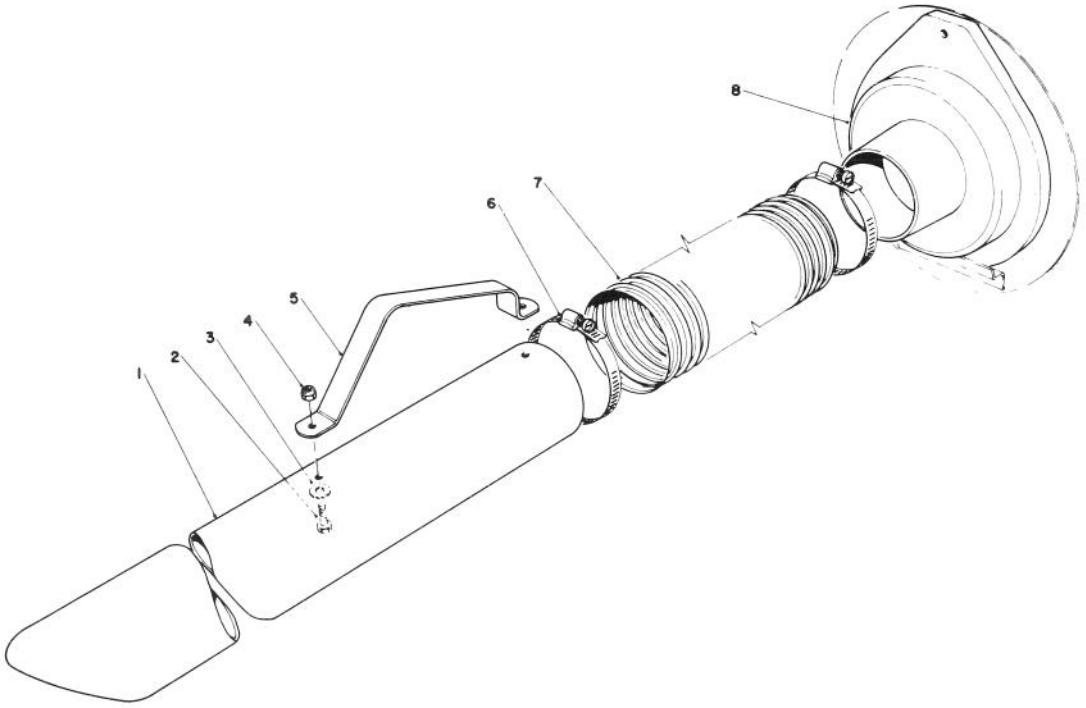

VACUUM HOSE KIT (Model 59085) (Optional)

Ref. No.	Part No.	Description	No. Used
1	20-5750	Nozzle	1
2	321-3	Capscrew	2
3	20-5690	Special Washer	2
4	32149-2	Locknut	2

Ref. No.	Part No.	Description	No. Used
5	20-6200	Handle	1
6	2412-46	Hose Clamp	2
7	20-6650	Vacuum Hose	1
8	20-5740	Adaptor	1

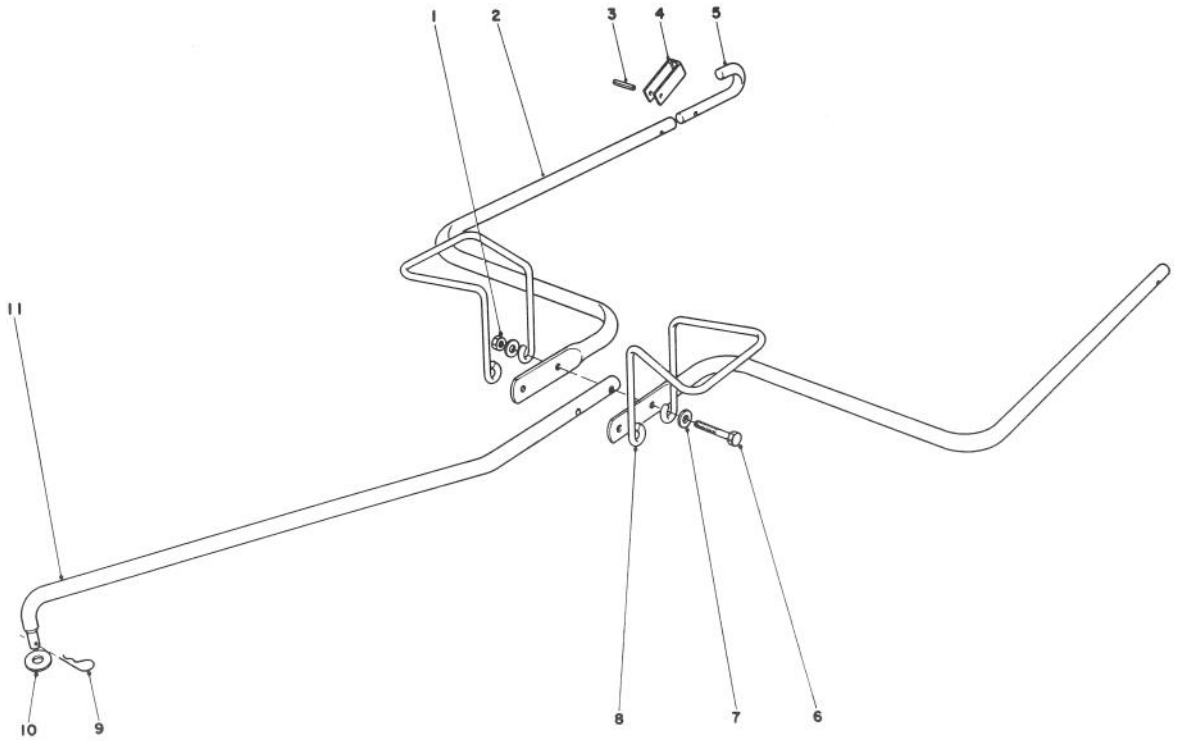

HITCH KIT (Model 59087) (Optional)

Ref. No.	Part No.	Description	No. Used
1	32152-4	Lock Nut	2
2	20-8010	Hitch Arm	2
3	32121-18	Pin Slotted Roll	2
4	20-8030	Hitch Lock	2
5	20-8850	Hook Hitch Arm	2
6	321-15	Capscrew	2

Ref. No.	Part No.	Description	No. Used
7	3256-2	Flat Washer	4
8	23-5190	Support Bag	2
9	3290-250	Hair Pin Cotter	1
10	3290-377	Push Nut	1
11	23-5360	Hitch Pole	1

ENGINE BRIGGS & STRATTON MODEL NO. 130202-1640-01

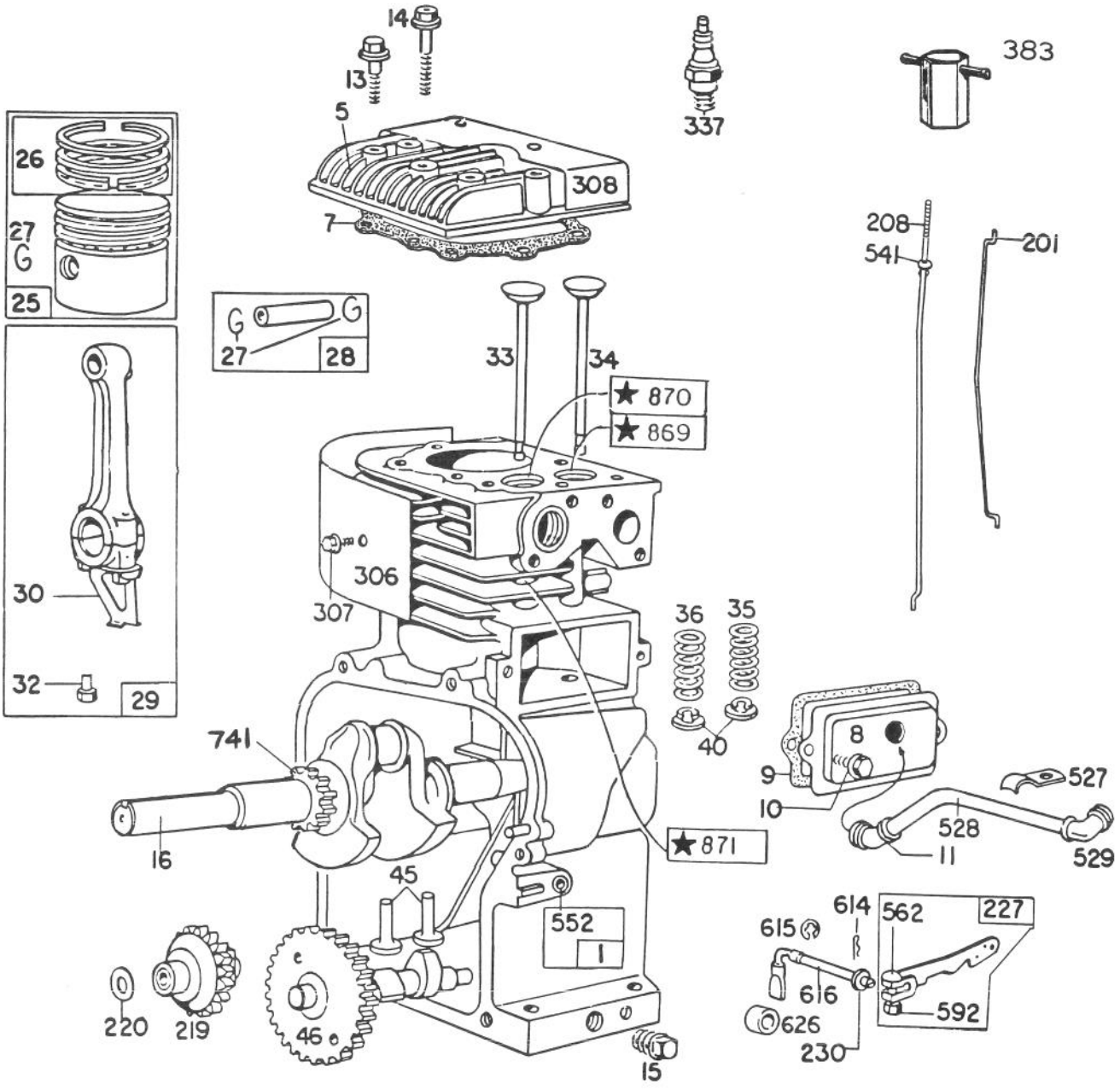

358 GASKET SET

★ REQUIRES SPECIAL TOOLS TO INSTALL
SEE REPAIR INSTRUCTION MANUAL

ENGINE BRIGGS & STRATTON MODEL NO. 130202-1640-01

Ref. No.	Part No.	Description	No. Used
1	395990	Cylinder Assembly	1
5	211542	Head – Cylinder	1
7	*270383	Gasket – Cylinder Head	1
8	294178	Breather – Valve Chamber	1
9	*27549	Gasket – Valve Cover	1
10	93394	Screw – Breather Mtg.	1
11	66578	Grommet – Breather Tube	1
12	*270080	Gasket – Crankcase – .015" thick (Std.)	1
	*270125	Gasket – Crankcase – .005" thick	1
	*270126	Gasket – Crankcase – .009" thick	1
13	93368	Screw – Cylinder Head (2-3/32" long)	1
		Note: 391608 Bracket – Mtg. Furnished by equipment manufacturer	
14	93369	Screw – Cylinder Head (2-15/32" long)	1
15	91249	Plug – Pipe, 1/4" Std., Square Head	1
16	397085	Crankshaft	1
		Note: To Replace Crankshaft Gear Pin, Order Part No. 230978 Used Only With Crankshaft With Loose Gear.	
18	297602	Cover Assy. – Crankcase	1
19	297603	Bushing – Crankcase Cover	1
		Note: Requires special tools for installation.	
20	294606	Seal – Oil	1
21	66768	Plug – Oil Filler	1
22	93032	Screw – Crankcase Cover Mounting	1
25	298904	Piston Assy. – Standard	1
	298905	Piston Assy. – .010" O.S.	1
	298906	Piston Assy. – .020" O.S.	1
	298907	Piston Assy. – .030" O.S.	1
		PISTON RING SETS:	
		Note: For Chrome Piston Ring Set – Standard Size – Order Part No. 299742.	
26	298982	Ring Set – Standard Piston	1
	298983	Ring Set – .010" O.S. Piston	1
	298984	Ring Set – .020" O.S. Piston	1
	298985	Ring Set – .030" O.S. Piston	1

*Included in Gasket Set – Part No. 297615.

Ref. No.	Part No.	Description	No. Used
27	26026	Lock – Piston Pin	1
28	298909	Pin Assy. – Piston – Standard	1
	298908	Pin Assy. – Piston – .005" O.S.	1
29	299430	Rod Assy. – Connecting	1
		Note: For Connecting Rod with .020" undersize Crankpin Bore – Order No. 390459.	
30	221890	Dipper – Connecting Rod	1
32	92296	Screw – Connecting Rod	1
33	211119	Valve Exhaust	1
34	261044	Valve – Intake	1
35	260552	Spring – Intake Valve	1
36	26478	Spring – Exhaust Valve	1
40	93312	Retainer – Valve Spring	1
45	260642	Tappet – Valve	1
46	211117	Gear – Cam	1
201	261558	Link – Governor	1
208	230946	Rod – Control	1
219	391737	Gear – Governor	1
220	221551	Washer – Thrust	1
227	393920	Lever Assy. – Governor	1
230	222450	Washer – Governor Lever (1/4" I.D.)	1
306	221511	Shield – Cylinder	1
307	93042	Screw – Cylinder Shield Mounting	1
308	221512	Cover – Cylinder Head	1
337	293918	Plug – Spark (1-1/2" Resistor Type)	1
358	297615	Gasket Set	1
383	89838	Wrench – Spark Plug	1
527	221514	Clamp – Breather Tube	1
528	230722	Tube – Breather	1
529	67838	Grommet – Breather Tube	1
541	22398	Washer	1
552	231079	Bushing – Governor	1
562	92613	Bolt – Governor Lever	1
592	231082	Nut – Hex. – 10-24	1
614	93306	Cotter – Hair Pin	1
615	93307	Retainer – E-Ring	1
616	231077	Crank – Governor	1
626	230749	Spacer – Governor Crank	1
741	261696	Gear – Timing	1
869	211787	Seat – Intake Valve (Std.)	1
870	211172	Seat – Exhaust Valve (Std.)	1
871	63709	Guide – Exhaust Valve	1

ENGINE BRIGGS & STRATTON MODEL NO. 130202-1640-01 (Continued)

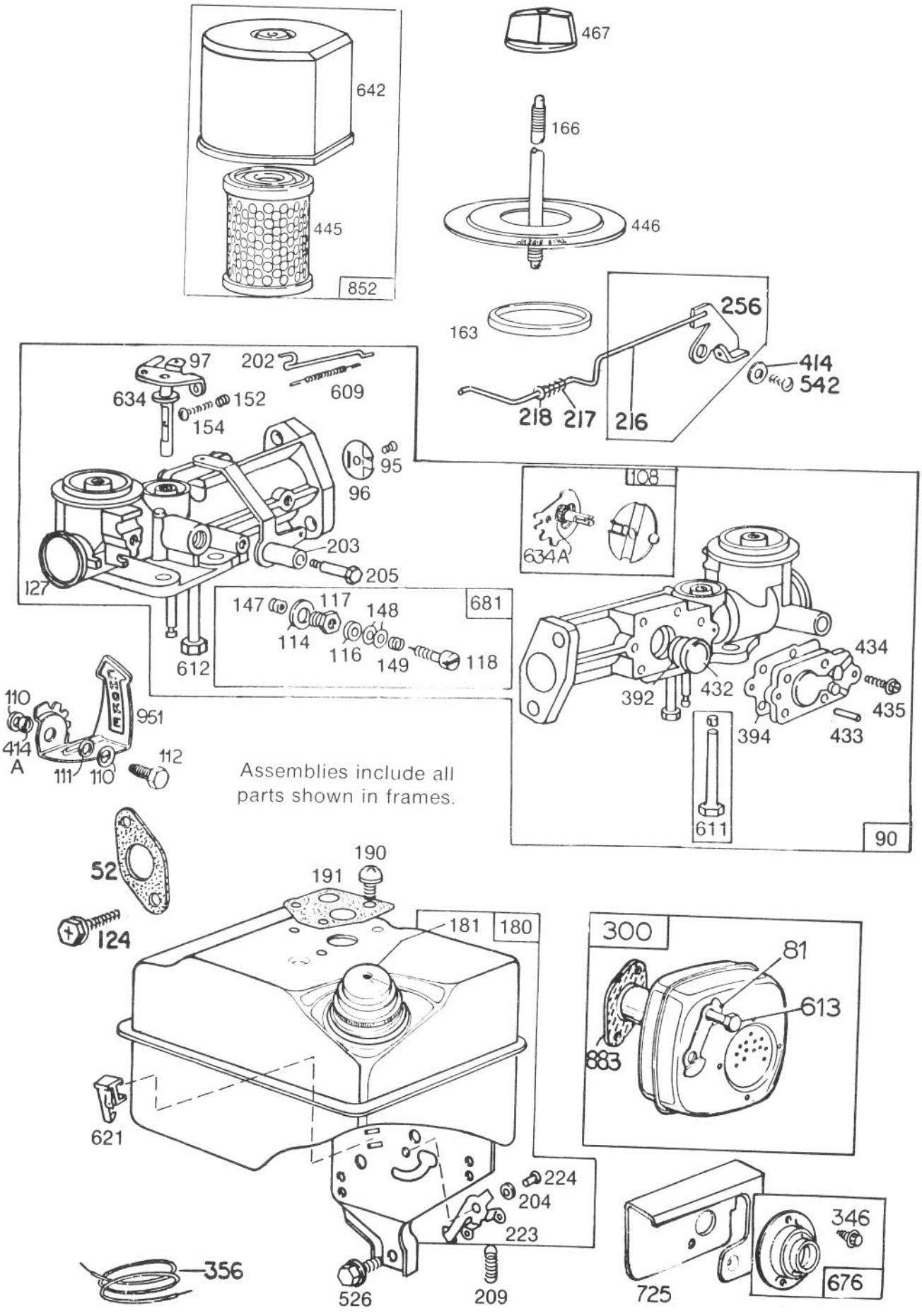

ENGINE BRIGGS & STRATTON MODEL NO. 130202-1640-01 (Continued)

Ref. No.	Part No.	Description	No. Used
52	*27355	Gasket – Carburetor Mounting	2
81	222263	Lock – Screw	1
90	397457	Carburetor Assembly	1
95	93499	Screw – Throttle Valve to Shaft	1
96	211203	Throttle – Carburetor	1
97	299212	Shaft and Lever – Throttle	1
108	397134	Valve Group – Choke	1
110	221226	Washer – Choke Lever	2
111	94060	Washer – Wave	1
112	93686	Screw – Choke Lever	1
114	66594	Gasket – Needle Valve Nut	1
116	65978	Packing – Needle Valve	1
117	230590	Nut – Needle Valve	1
118	23433	Valve – Needle	1
124	93357	Screw – Hex. Hd.	2
127	22831	Welch Plug	1
147	230591	Seat – Needle Valve	1
148	22235	Washer – Needle Valve	2
149	26336	Spring – Needle Valve	1
152	260575	Spring – Throttle Adjustment	1
154	93527	Screw – Machine, Rd. Hd.	1
163	271139	Gasket – Air Cleaner Mounting	1
166	231332	Stud – Air Cleaner	1
180	397137	Tank Assembly – Fuel	1
181	397567	Cap – Fuel Tank	1
190	93440	Screw – Fuel Tank Mounting	1
191	*27911	Gasket – Fuel Tank Mounting	2
202	260678	Link – Throttle	1
203	393919	Crank – Bell	1
204	222962	Bushing – Governor Lever (Flat)	1
205	93838	Screw – Shoulder	1
209	260695	Spring – Governor	1
216	299859	Link – Choke (Includes Bell Crank)	1
217	260189	Spring – Choke Link	1
218	221198	Washer – Choke Link	1

Ref. No.	Part No.	Description	No. Used
223	221517	Lever – Governor Control	1
224	93491	Rivet – Governor Control Lever Mounting	1
256	299859	Crank – Bell (Includes Choke Link)	1
300	393615	Muffler – Exhaust	1
346	93705	Screw	1
356	298693	Wire – Ground	1
392	260455	Spring – Fuel Pump Diaphragm	1
394	270026	Diaphragm	1
414	220982	Washer	1
414A	231325	Spacer – Choke Lever	1
432	221377	Cap – Spring	1
433	93265	Pin – Diaphragm Cover	1
434	210959	Cover – Diaphragm	1
435	93141	Screw – Diaphragm Cover	1
445	396424	Cartridge – Air Cleaner	1
446	222844	Base – Air Cleaner	1
467	212706	Knob – Air Cleaner	1
526	93343	Screw – Tank Bracket Mounting	1
542	92265	Screw	1
609	260694	Spring – Throttle Link	1
611	391813	Fuel Pipe and Clip Assembly	1
612	296811	Pipe – Fuel	1
613	93935	Screw – Hex. Hd. Shoulder	1
621	297472	Switch – Stop	1
634	270167	Washer – Throttle Shaft (Felt)	1
634A	270382	Washer – Choke Shaft	1
642	223306	Cover – Air Cleaner	1
676	395700	Deflector – Exhaust (Direct Outlet)	1
681	299060	Needle Valve Kit	1
725	222595	Shield – Heat	1
852	396397	Cleaner Group – Air	1
883	270918	Gasket – Muffler	1
951	223286	Lever – Choke	1

*Included in Gasket Set — Part No. 297615.

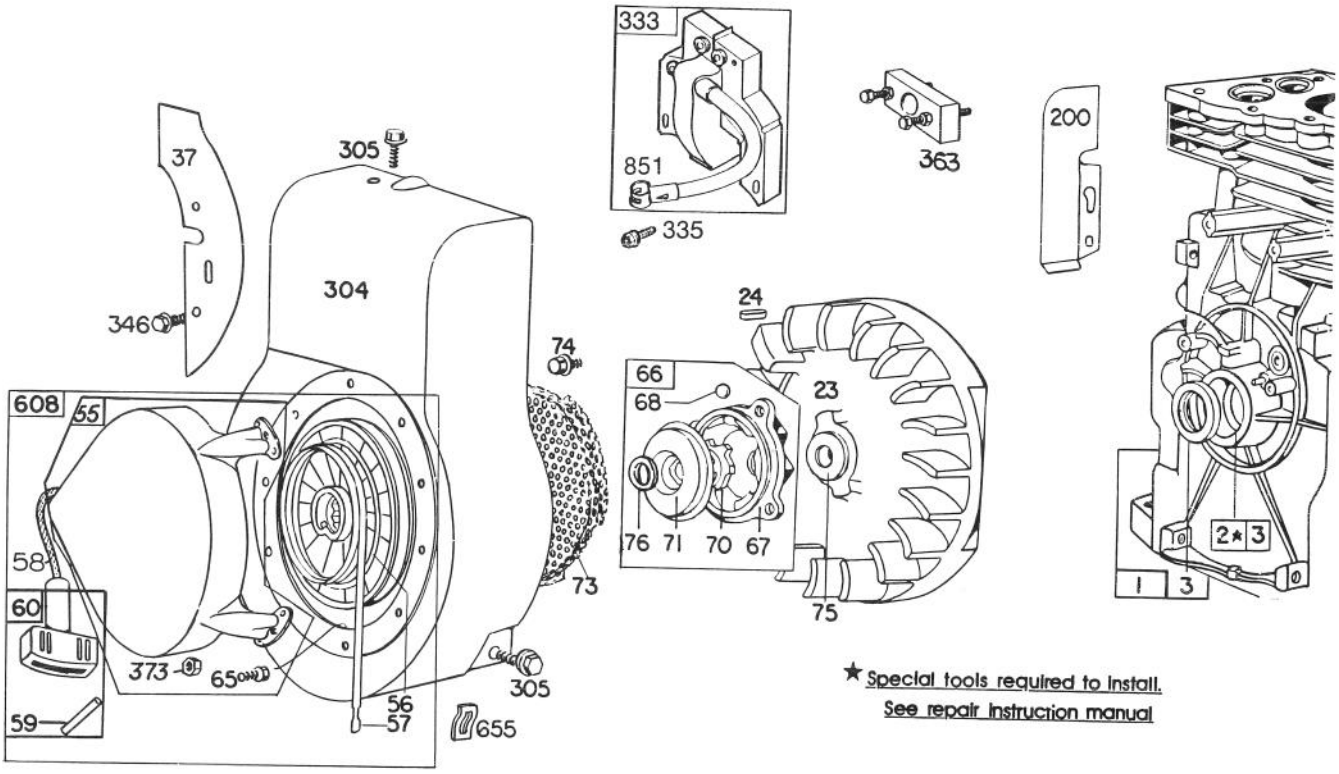

ENGINE BRIGGS & STRATTON MODEL NO. 130202-1640-01 (Continued)

Ref. No.	Part No.	Description	No. Used
1	395990	Cylinder Assembly	1
2	297565	Bushing – Cylinder **Note:** Requires special tools for installation.	1
3	299819	Seal – Oil	1
23	297229	Flywheel – Magneto	1
24	222698	Key – Flywheel	1
37	222443	Guard – Flywheel	1
55	299431	Housing – Rewind Starter	1
56	295871	Pulley – Rewind Starter (Includes 63" long rope)	1
57	294303	Spring – Rewind Starter	1
58	66884	Rope – Rewind Starter — 63" long	1
59	230228	Pin – Starter Grip	1
60	393152	Grip – Starter Rope	1
65	93067	Screw – Stamped Steel Housing Mtg.	1
66	394558	Clutch Assy. – Rewind Starter	1
67	394897	Housing – Starter Clutch	1

Ref. No.	Part No.	Description	No. Used
68	63770	Ball – Clutch	1
70	298436	Ratchet – Rewind Starter	1
71	221653	Washer – Clutch Retainer	1
73	221923	Screen – Starter Pulley	1
74	93490	Screw	1
75	220865	Washer – Spring	1
76	68238	Washer – Ratchet Sealing	1
200	221480	Guide – Air	1
304	299410	Housing – Blower	1
305	93158	Screw – Blower Housing Mtg.	1
333	397358	Armature – Magneto	1
335	93414	Screw – Armature Mtg.	1
346	93705	Screw	1
363	19069	Flywheel Puller (Optional Accessory)	1
373	92987	Nut – Hex.	1
608	390463	Starter Assy. – Rewind	1
655	222598	Anchor – Spring	1
851	221798	Cable Terminal – Ignition	1

The Toro Promise

A TWO YEAR LIMITED WARRANTY

The Toro Company promises to repair your TORO Product if defective in materials or workmanship. The following time periods from the date of purchase apply:

Residential Product	2 Years
Residential Products Used Commercially . . .	45 Days

The costs of parts and labor are included, but the customer pays the transportation costs. Just return any residential product to an Authorized TORO Service Dealer or TORO Distributor.

Should you feel your TORO Product is defective and wish to rely on The Toro Promise, the following procedure is recommended:

1. Contact any Authorized TORO Service Dealer, TORO Master Service Dealer, or TORO Distributor (the Yellow Pages of your telephone directory is a good reference source).
2. He will either instruct you to return the product to him or recommend another Authorized TORO Service outlet which might be more convenient.
3. Bring the product along with your original sales slip, or other evidence of purchase date, to the service dealer.
4. The servicing dealer will inspect the unit, advise you whether the product is defective and, if so, make all repairs necessary to correct the defect without extra charge to you.

If for any reason you are dissatisfied with the dealer's analysis of the defect or the service performed, you may contact us.

Write:

TORO Consumer Service Department
8111 Lyndale Avenue South
Minneapolis, Minnesota 55420

The above remedy of product defects through repair by an Authorized TORO Service Dealer is the purchaser's sole remedy for any defect.

THERE IS NO OTHER EXPRESS WARRANTY. ALL IMPLIED WARRANTIES OF MERCHANTABILITY AND FITNESS FOR USE ARE LIMITED TO THE DURATION OF THE EXPRESS WARRANTY.

Some states do not allow limitations on how long an implied warranty lasts, so the above limitation may not apply to you.

This warranty applies only to parts or components which are defective and does not cover repairs necessary due to normal wear, misuse, accidents, or lack of proper maintenance. Regular, routine maintenance of the unit to keep it in proper operating condition is the responsibility of the owner.

All warranty repairs reimbursable under The Toro Promise must be performed by an Authorized TORO Service Dealer using Toro approved replacement parts.

Repairs or attempted repairs by anyone other than an Authorized TORO Service Account are not reimbursable under The Toro Promise. In addition, these unauthorized repair attempts may result in additional malfunctions, the correction of which is not covered by warranty.

THE TORO COMPANY IS NOT LIABLE FOR INDIRECT, INCIDENTAL OR CONSEQUENTIAL DAMAGES IN CONNECTION WITH THE USE OF THE PRODUCT INCLUDING ANY COST OR EXPENSE OF PROVIDING SUBSTITUTE EQUIPMENT OR SERVICE DURING PERIODS OF MALFUNCTION OR NON-USE.

Some states do not allow the exclusion or limitation of incidental or consequential damages, so the above limitation or exclusion may not apply to you.

This warranty gives you specific legal rights, and you may also have other rights which vary from state to state.

COUNTRIES OTHER THAN THE UNITED STATES OR CANADA

Customers who have purchased TORO products exported from the United States or Canada should contact their TORO Distributor (Dealer) to obtain guarantee policies for your country, province or state. If for any reason you are dissatisfied with your Distributor's service or have difficulty obtaining guarantee information, contact the TORO importer. If all other remedies fail, you may contact us at The Toro Company.

Compliance with Radio Interference Regulations Certified.
Certifie Conforme au Reglement sur le Brouillage Radioelectrique.

PRODUCT CHANGES

In an effort to make improvements available to TORO owners as quickly as possible, minor changes are incorporated into Toro's products from time to time that do not become immediately shown in the Parts Catalog. If such a change apparently has been made in your unit, which is not reflected in your manual, see your TORO Distributor or his Authorized TORO Service Dealer for information and part numbers.

IDENTIFICATION AND ORDERING

Model and Serial Numbers

The lawn vacuum has two identification numbers: a model number and a serial number. The two numbers are stamped on a decal which is located on right front corner of engine plate. In any correspondence concerning the lawn vacuum, supply model and serial numbers to assure that correct information and replacement parts are obtained.

To order replacement parts from an Authorized TORO Service Dealer, supply the following information:

1. Model and serial numbers of the lawn vacuum.
2. Part number, description, and quantity of part(s) desired.

NOTE: Do not order by reference number if a parts catalog is being used; use the PART NUMBER.

Keep Your TORO All Toro Genuine TORO PARTS & ACCESSORIES ***Insist on Genuine Toro Parts***

MAINTENANCE RECORD

Date	Hours Used	Oil Change	Lubrication	Summer Storage	Fall Service	Spark Plug Gap

Litho in U.S.A.