Form No. 3455-997 Rev C

TORO®

Count on it.

Parts Catalog

# 60in Z Master® Professional 2000 Series

## Riding Mower

**Model No. 77288—Serial No. 400000000 and Up**

Register at www.Toro.com.
Original Instructions (EN)

*3455-997* C

# Ordering Replacement Parts

To order replacement parts, please supply the part number, the quantity, and the description of each part desired.

### Understanding Reference Numbers

Each identified part in an illustration has a reference number. The reference number for a part also appears in the parts list, along with other information about the part.

This catalog uses two special reference number formats, one to indicate parts in a service assembly and another to indicate the quantity of a given part in an illustration.

### Service Assembly Reference Numbers

Parts in service assemblies have reference numbers in the form a:b. The a represents the reference number of the entire service assembly and the b represents a sequential number unique to each part within the service assembly.

For example, a wheel assembly might be identified by reference number 6, the tire by 6:1, the valve by 6:2, and the wheel by 6:3. When you order the assembly identified by reference number 6, you receive all parts identified by reference numbers 6:1,6:2, and 6:3. However, you may also order any part individually. Reference numbers of this type appear in illustration and in parts lists.

### Reference Numbers Indicating Quantity

In an illustration, if a reference number indicates more than one part, the reference number has the form nX y. The n represents the quantity of the part, the X is the multiplication symbol, and the y represents the reference number.

For example, in an illustration, the reference number 2X 37 means that two of the parts identified by reference number 37 are indicated.

# Contents

Frame Assembly . . . 4
Roll-Over Protection System Assembly No. 139-8062 . . . 6
Hydro Drive Assembly . . . 8
LH Transaxle Assembly No. 145-8424 . . . 10
RH Transaxle Assembly No. 145-8425 . . . 12
Throttle and Guards Assembly . . . 14
Fuel Assembly . . . 16
Fuel Tank Assembly No. 147-2403 . . . 18
Seat Mount Assembly . . . 20
Seat Assembly No. 147-2384 . . . 22
Motion Control Assembly . . . 24
Left and Right Motion Control Assembly . . . 26
Front Caster Wheel Assembly . . . 28
Caster and Wheel Assembly . . . 30
Rear Wheel Assembly . . . 32
Electrical Assembly . . . 34
Wire Harness Assembly No. 147-2363 . . . 36
Deck Lift Assembly . . . 38
Deck Strut Assembly No. 140-1179 . . . 40
Engine, Clutch and Muffler Assembly . . . 42
Decal Assembly . . . 44
Deck Assembly . . . 46
Deck Decal Assembly No. 147-7373 . . . 48
Spindle Assembly No. 139-2357 . . . 50
Deflector Assembly No. 144-2635 . . . 52
Idler Arm Assembly No. 139-1087 . . . 54
Attachments and Accessories . . . 56

**© 2026—The Toro® Company**
**8111 Lyndale Avenue South**
**Bloomington, MN 55420**



**Contact us at www.Toro.com.**
**Printed in the USA.**
**All Rights Reserved**

# Frame Assembly

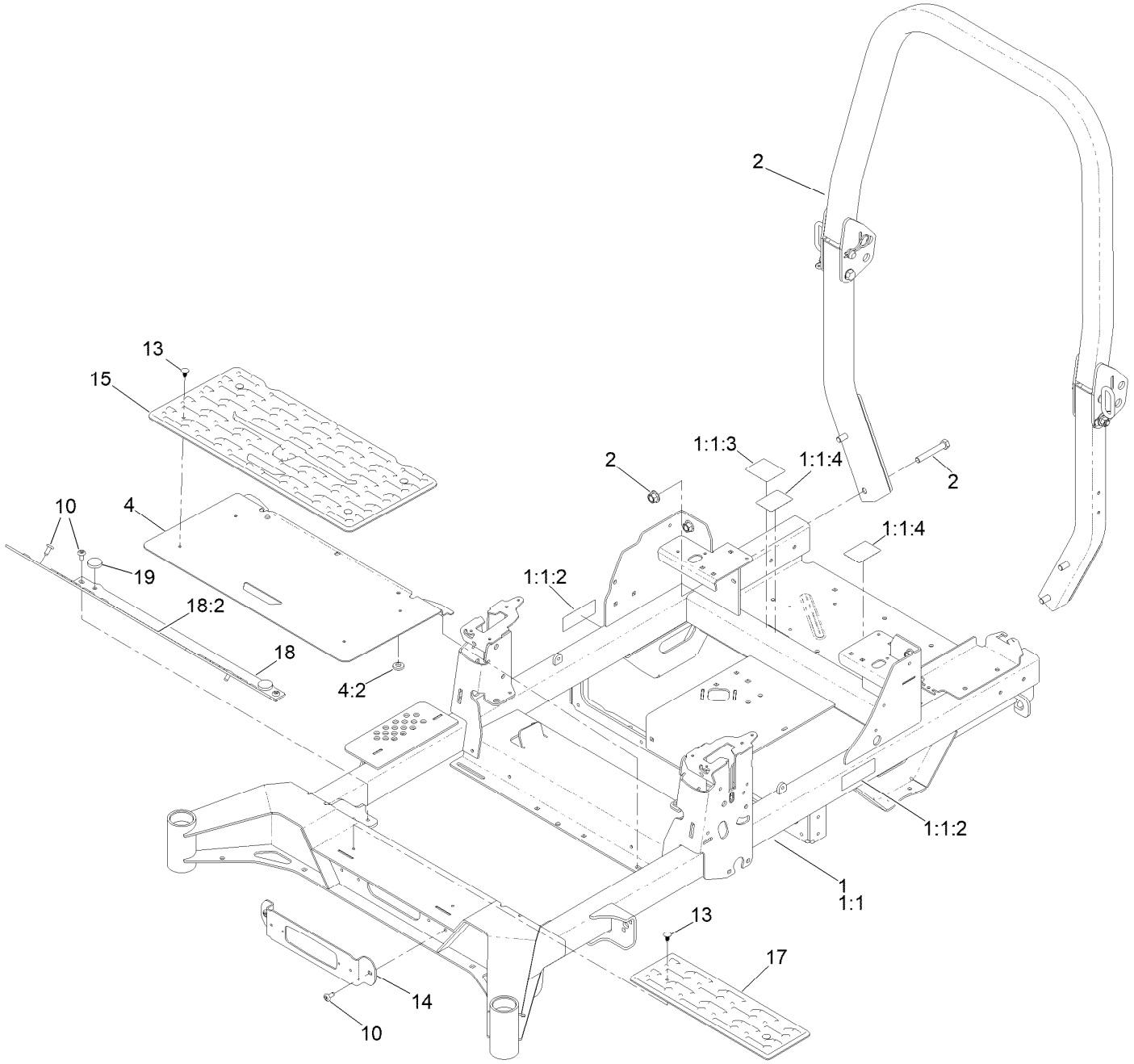

# Frame Assembly (continued)

| Ref. | Part Number | Qty. | Description |
|---|---|---|---|
| 1 | 145-7031 | 1 | Frame ASM |
| 1:1 | | 1 | Frame-60 ● |
| 1:1:2 | 126-4363 | 2 | Decal-Warning |
| 1:1:3 | 109-6014 | 1 | Decal-Routing, Belt |
| 1:1:4 | 147-4982 | 2 | Decal-Bypass |
| 2 | 139-8062 | 1 | ASM-ROPS |
| 4 | 138-6098 | 1 | Floor Pan ASM |
| 4:2 | 109-9233 | 2 | Bumper-Push-In, Rubber |

| Ref. | Part Number | Qty. | Description |
|---|---|---|---|
| 10 | 138-9753 | 6 | Screw |
| 13 | 117-2382 | 6 | Plug-Plastic |
| 14 | 140-4994-01 | 1 | Bracket-Light |
| 15 | 140-7950 | 1 | Floormat-Fixed Seat |
| 17 | 140-4992 | 1 | Step |
| 18 | 140-4995 | 1 | Toeboard |
| 18:2 | 126-8383 | 1 | Decal-Danger |
| 19 | 109-9233 | 2 | Bumper-Push-In, Rubber |

● Not serviced separately

# Roll-Over Protection System Assembly
# No. 139-8062

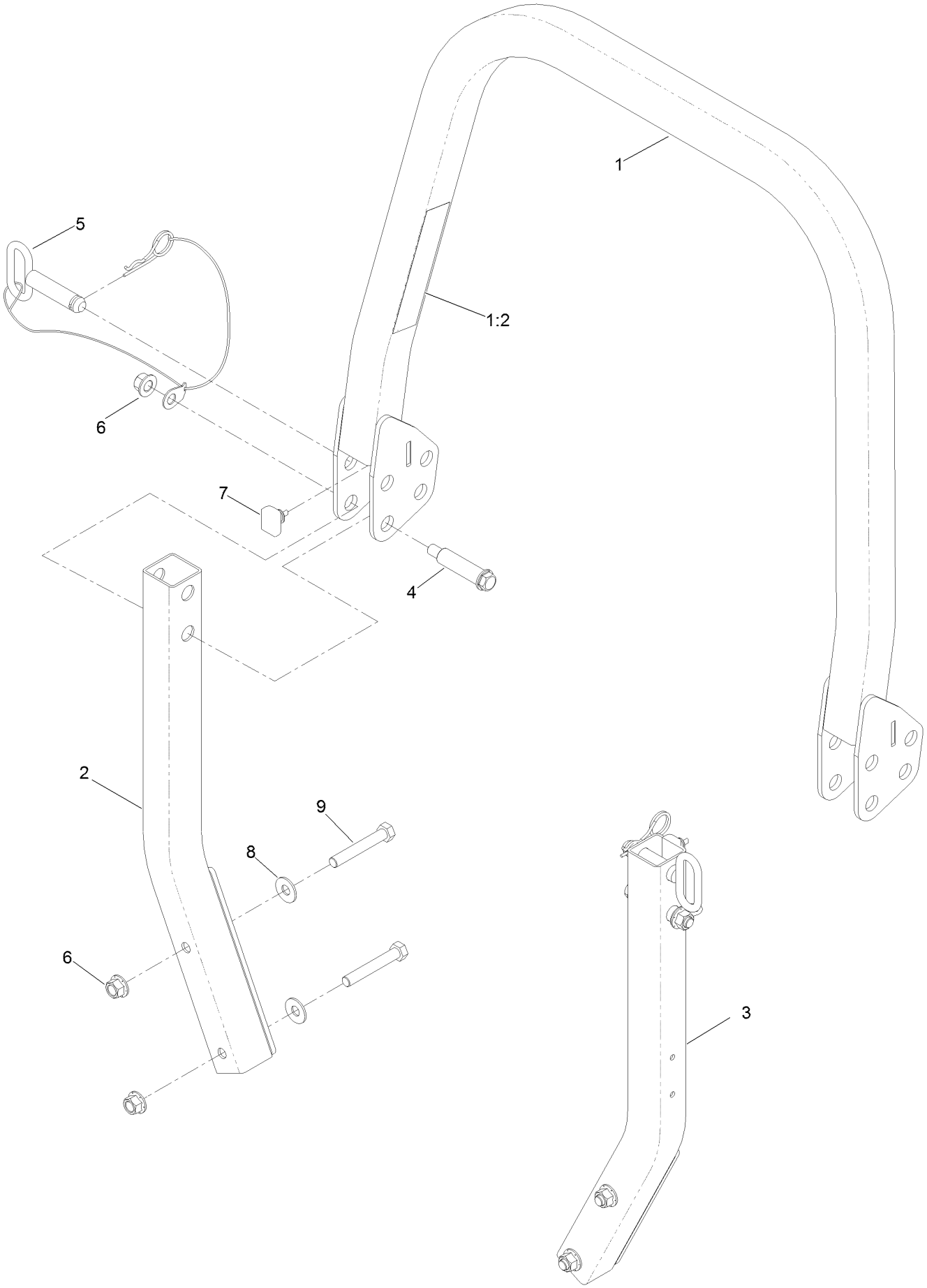

# Roll-Over Protection System Assembly No. 139-8062 (continued)

| Ref. | Part Number | Qty. | Description |
|---|---|---|---|
| 1 | | 1 | Upper ROPS ASM ● |
| 1:2 | 107-3069 | 1 | Decal-Warning |
| 2 | | 1 | RH Lower ROPS ASM ● |
| 3 | | 1 | LH Lower ROPS ASM ● |
| 4 | 126-9209 | 2 | Bolt-Shoulder |
| 5 | 103-4553 | 2 | ROPS Fold Pin ASM |
| 6 | 99-5107 | 6 | Nut-HF Nylock |
| 7 | 109-5337 | 2 | Bumper-ROPS |
| 8 | 109-9505 | 4 | Washer-Spring |
| 9 | 325-13 | 4 | Screw-HH |

● Not serviced separately

# Hydro Drive Assembly

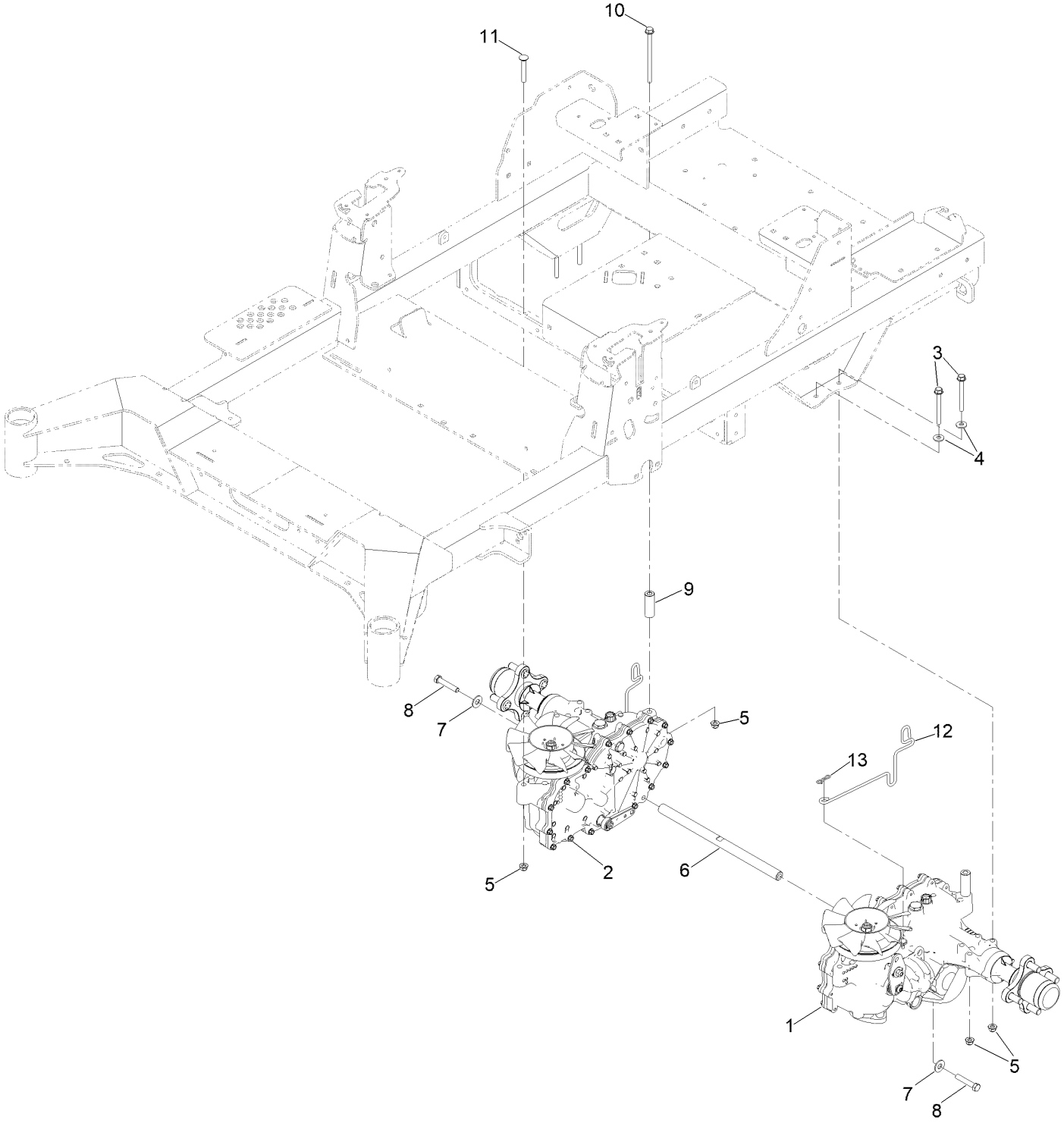

# Hydro Drive Assembly (continued)

| Ref. | Part Number | Qty. | Description |
|---|---|---|---|
| 1 | 145-8424 | 1 | Transaxle ASM |
| 2 | 145-8425 | 1 | Transaxle ASM |
| 3 | 126-4687 | 4 | Screw-HHF |
| 4 | 1-303334 | 4 | Washer-Spring |
| 5 | 104-8300 | 8 | Nut-HF, NI |
| 6 | 145-5708 | 1 | Shaft-Spacer |
| 7 | 3256-4 | 2 | Washer-Flat |
| 8 | 94-7972 | 2 | Screw-HH, Patch |
| 9 | 109-3652 | 2 | Spacer |
| 10 | 126-5896 | 2 | Screw HHF |
| 11 | 3230-7 | 2 | Bolt-CARR |
| 12 | 125-8950 | 2 | Rod-Bypass |
| 13 | 119-1415 | 2 | Pin-Cotter, Locking |

# LH Transaxle Assembly No. 145-8424

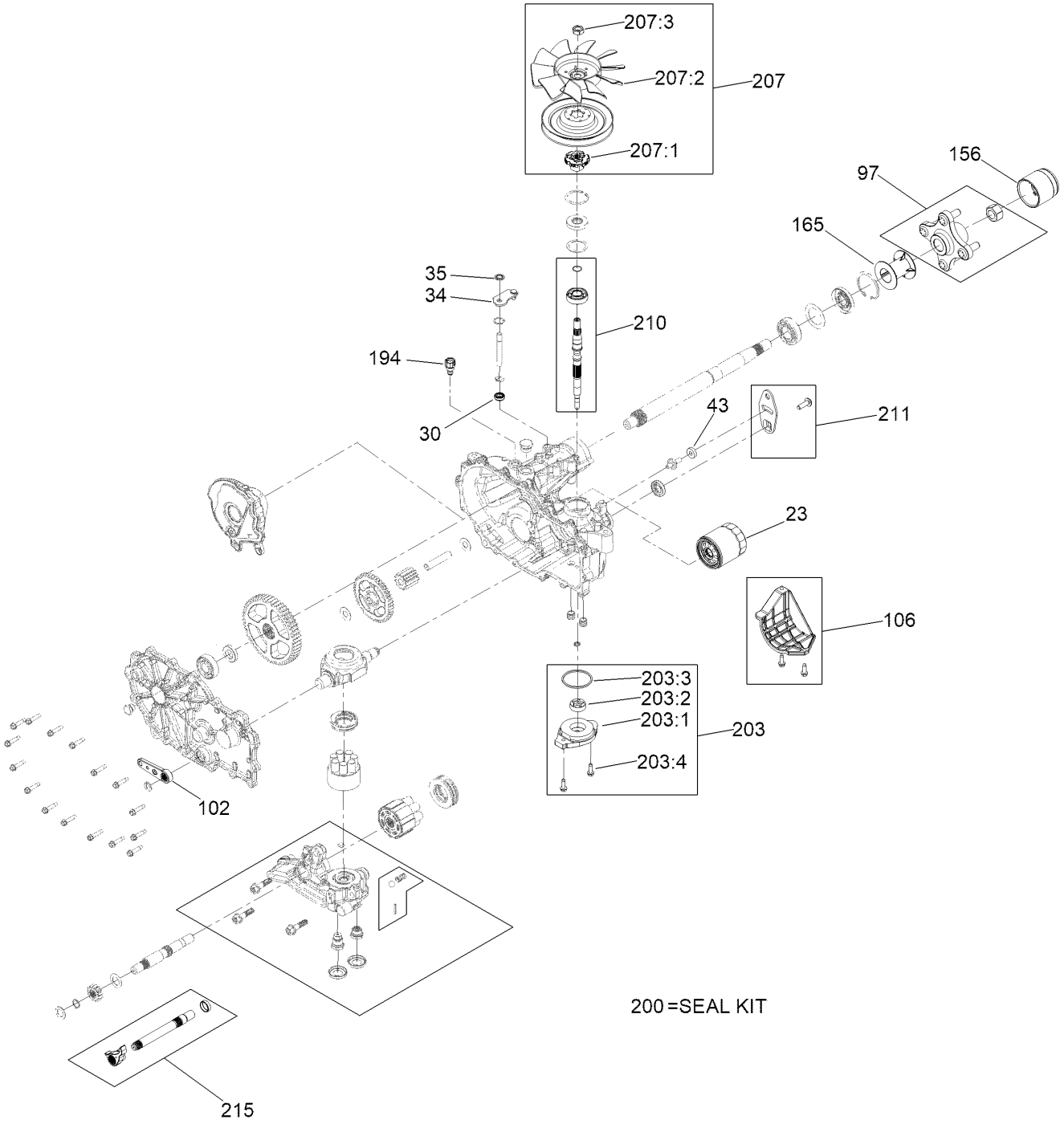

# LH Transaxle Assembly No. 145-8424 (continued)

| Ref. | Part Number | Qty. | Description |
|---|---|---|---|
| 23 | 109-3321 | 1 | Element-Oil Filter, HYD |
| 30 | 139-7497 | 1 | Seal-Lip |
| 34 | 107-2490 | 1 | Arm-Bypass |
| 35 | 106-8681 | 1 | Ring-Retaining, External |
| 43 | 112-9853 | 1 | Puck-Friction |
| 97 | 116-3872 | 1 | Hub-Offset |
| 102 | 125-0021 | 1 | Handle-Brake |
| 106 | 120-7979 | 1 | Guard-Filter, LH |
| 156 | 116-6214 | 1 | Cap-Axle, Long |
| 165 | 116-6213 | 1 | Tube-Axle |
| 194 | 147-7366 | 1 | Assembly-Fitting, Breather |
| 200 | 121-3243 | 1 | Seal Kit |

| Ref. | Part Number | Qty. | Description |
|---|---|---|---|
| 203 | 114-8465 | 1 | Charge Kit |
| 203:1 | 114-8457 | 1 | Cover-Charge Pump |
| 203:2 | 104-2122 | 1 | Gerotor ASM |
| 203:3 | 109-3540 | 1 | O Ring-Seal |
| 203:4 | 104-2120 | 1 | Screw |
| 207 | 126-8904 | 1 | Fan And Pulley Kit |
| 207:1 | 126-8905 | 1 | Hub-Fan |
| 207:2 | 126-0226 | 1 | Fan |
| 207:3 | 116-9714 | 1 | Nut-HJ |
| 210 | 121-3248 | 1 | Input Shaft Kit |
| 211 | 117-5362 | 1 | Control Arm Kit |
| 215 | 140-8353 | 1 | Inboard Kit |

# RH Transaxle Assembly No. 145-8425

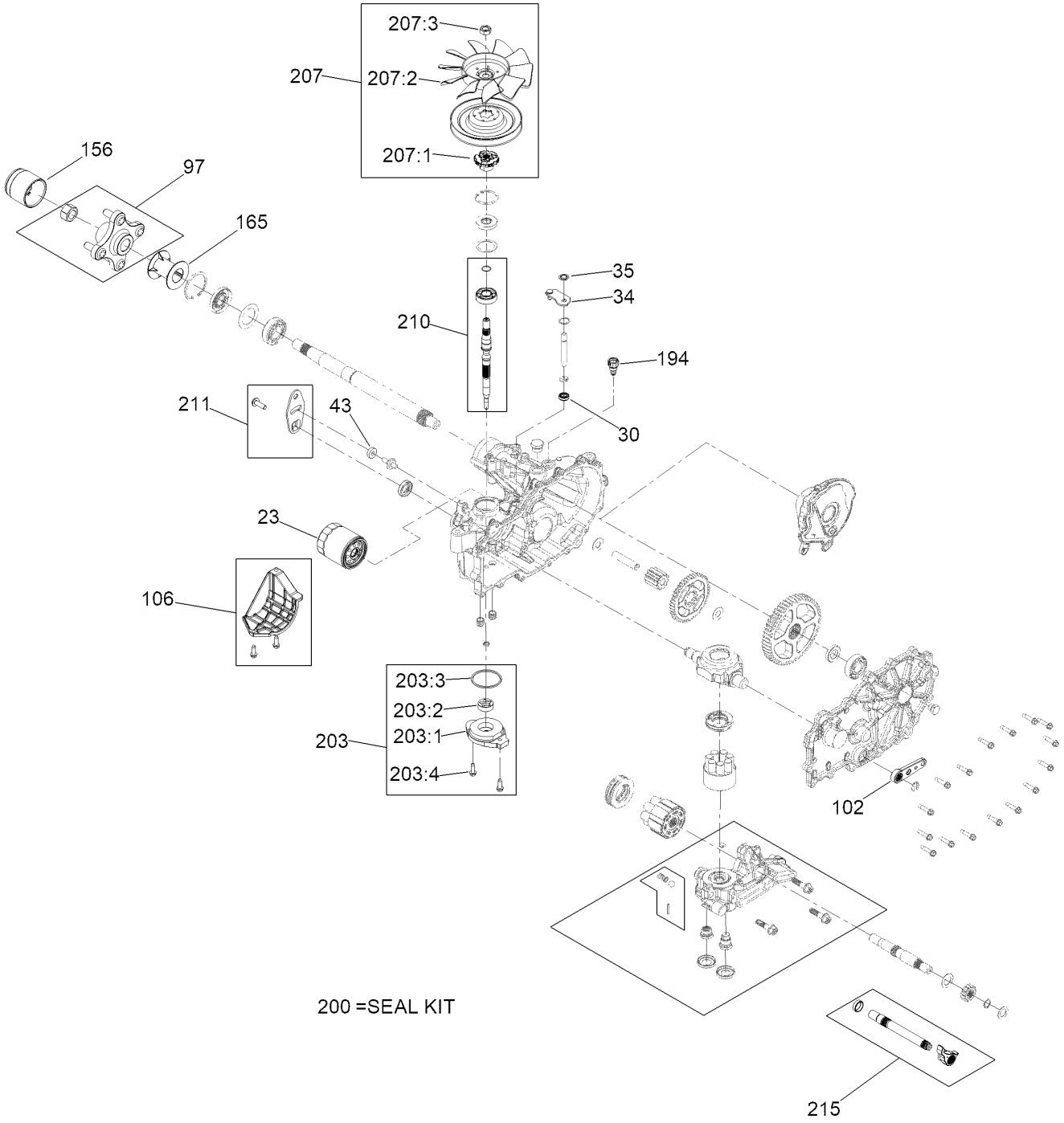

# RH Transaxle Assembly No. 145-8425 (continued)

| Ref. | Part Number | Qty. | Description |
|---|---|---|---|
| 23 | 109-3321 | 1 | Element-Oil Filter, HYD |
| 30 | 139-7497 | 1 | Seal-Lip |
| 34 | 107-2490 | 1 | Arm-Bypass |
| 35 | 106-8681 | 1 | Ring-Retaining, External |
| 43 | 112-9853 | 1 | Puck-Friction |
| 97 | 116-3872 | 1 | Hub-Offset |
| 102 | 125-0021 | 1 | Handle-Brake |
| 106 | 120-7981 | 1 | Guard-Filter, RH |
| 156 | 116-6214 | 1 | Cap-Axle, Long |
| 165 | 116-6213 | 1 | Tube-Axle |
| 194 | 147-7366 | 1 | Assembly-Fitting, Breather |
| 200 | 121-3243 | 1 | Seal Kit |

| Ref. | Part Number | Qty. | Description |
|---|---|---|---|
| 203 | 114-8465 | 1 | Charge Kit |
| 203:1 | 114-8457 | 1 | Cover-Charge Pump |
| 203:2 | 104-2122 | 1 | Gerotor ASM |
| 203:3 | 109-3540 | 1 | O Ring-Seal |
| 203:4 | 104-2120 | 1 | Screw |
| 207 | 126-8904 | 1 | Fan And Pulley Kit |
| 207:1 | 126-8905 | 1 | Hub-Fan |
| 207:2 | 126-0226 | 1 | Fan |
| 207:3 | 116-9714 | 1 | Nut-HJ |
| 210 | 121-3248 | 1 | Input Shaft Kit |
| 211 | 117-5362 | 1 | Control Arm Kit |
| 215 | 140-8353 | 1 | Inboard Kit |

# Throttle and Guards Assembly

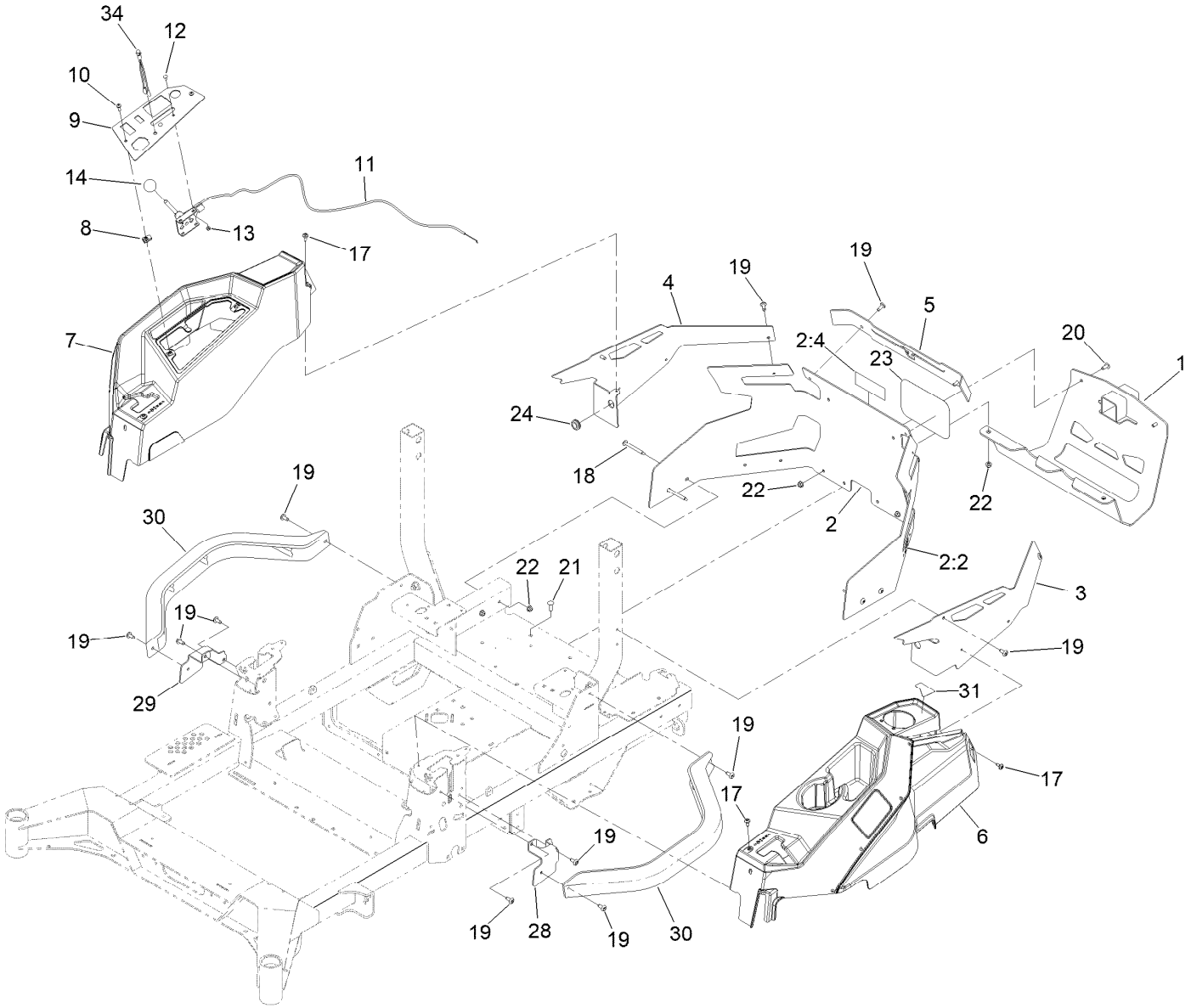

# Throttle and Guards Assembly (continued)

| Ref. | Part Number | Qty. | Description |
|---|---|---|---|
| 1 | 147-2408-03 | 1 | Guard-Muffler |
| 2 | 145-7022 | 1 | Rear Guard ASM |
| 2:2 | 106-5517 | 2 | Decal-Warning |
| 2:4 | 147-7364 | 1 | Decal-Hitch |
| 3 | 145-8443-01 | 1 | Guard-Rear, LH |
| 4 | 145-8444-01 | 1 | Guard-Rear, RH |
| 5 | 145-7007-01 | 1 | Guard-Rear, Top |
| 6 | 147-2352 | 1 | LH Pod ASM |
| 7 | 147-2353 | 1 | RH Pod ASM |
| 8 | 107069 | 2 | Clip |
| 9 | 145-8498-03 | 1 | Panel-Control |
| 10 | 138-0689 | 2 | Screw-PH |
| 11 | 139-6734 | 1 | Cable-Control, Throttle |
| 12 | 1-807513 | 2 | Bolt-CARR |
| 13 | 3296-2 | 2 | Nut-Lock, NI |
| 14 | 1-603175 | 1 | Knob-Ball |
| 17 | 120-7950 | 6 | Screw-Torx |
| 18 | 126-6267 | 4 | Screw-TTH |
| 19 | 138-9753 | 14 | Screw |
| 20 | 126-6268 | 2 | Screw-TTH |
| 21 | 3230-22 | 2 | Screw-CARR |
| 22 | 104-8300 | 8 | Nut-HF, NI |
| 23 | 67-7320 | 1 | Decal |
| 24 | 112-7069 | 1 | Grommet |
| 28 | 145-8481-01 | 1 | Bracket-Mount, LH |
| 29 | 145-8484-01 | 1 | Bracket-Mount, RH |
| 30 | 147-2385-01 | 2 | Tube-Pod |
| 31 | 147-2399 | 1 | Decal-Fuel Fill |
| 34 | 1-643267 | 1 | Indicator-LED, Red |

# Fuel Assembly

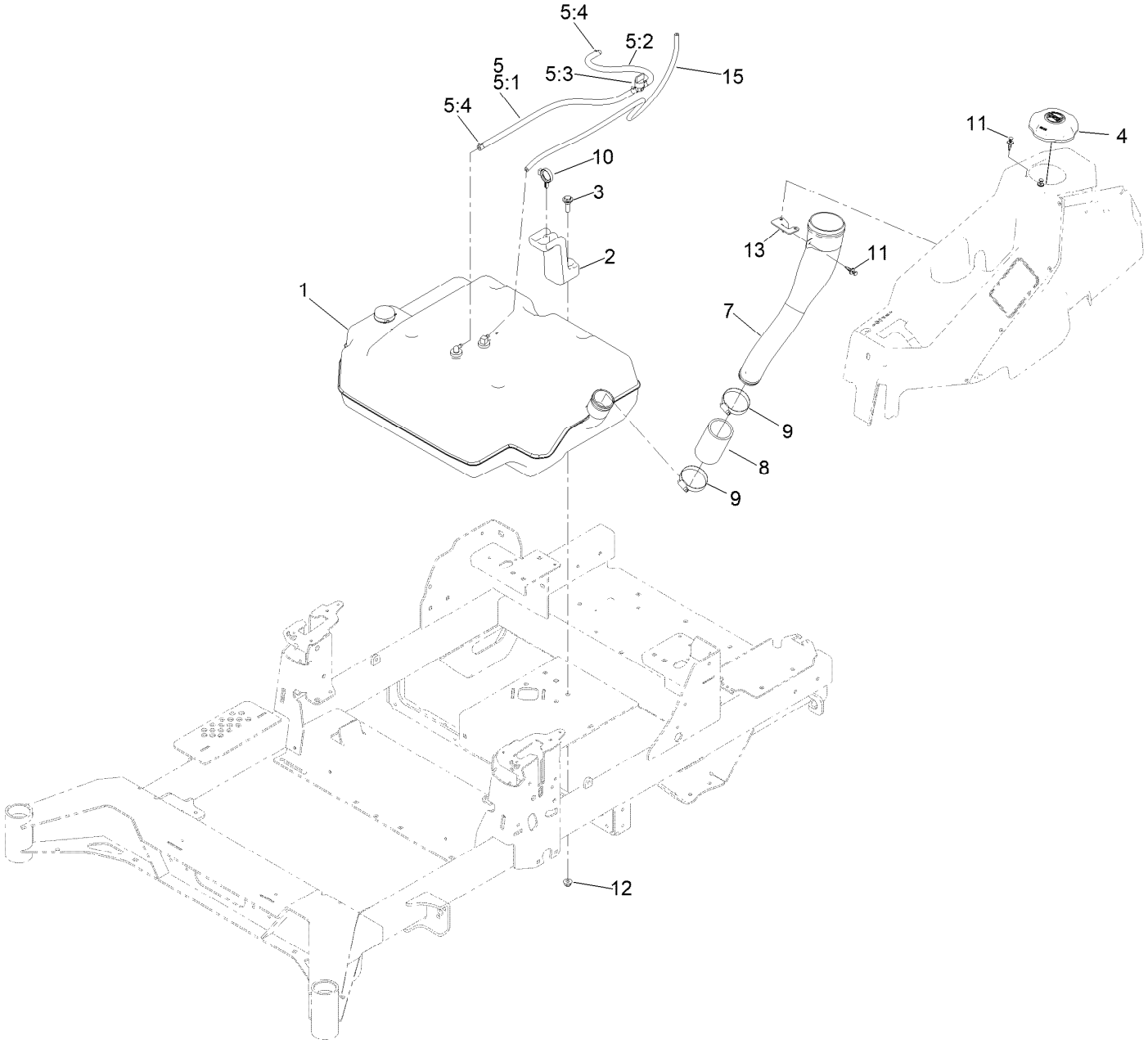

# Fuel Assembly (continued)

| Ref. | Part Number | Qty. | Description |
|---|---|---|---|
| 1 | 147-2403 | 1 | Tank ASM-Fuel |
| 2 | 145-5778 | 1 | Retainer-Tank, Rear |
| 3 | 614672 | 1 | Screw-Shoulder, HWH |
| 4 | 137-4119 | 1 | Cap-Fuel, Ratcheting |
| 5 | 147-4649 | 1 | Fuel Hose ASM |
| 5:1 | 109-0301 | 1 | Hose-Fuel |
| 5:2 | 114-3766 | 1 | Hose-Fuel |
| 5:3 | 1-603770 | 1 | Valve-Fuel |
| 5:4 | 2412-98 | 4 | Clamp-Hose |

| Ref. | Part Number | Qty. | Description |
|---|---|---|---|
| 7 | 147-7350 | 1 | Neck-Filler, Fuel |
| 8 | 145-4698 | 1 | Hose-Filler, Fuel |
| 9 | 2412-130 | 2 | Clamp-Hose |
| 10 | 104-2490 | 1 | Clamp-Hose |
| 11 | 125-9622 | 3 | Rivet-Blind |
| 12 | 104-8301 | 1 | Nut-HF, NI |
| 13 | 147-4588 | 1 | Bracket-Mounting, Neck |
| 15 | 119-3517 | 1 | Hose-Fuel |

# Fuel Tank Assembly No. 147-2403

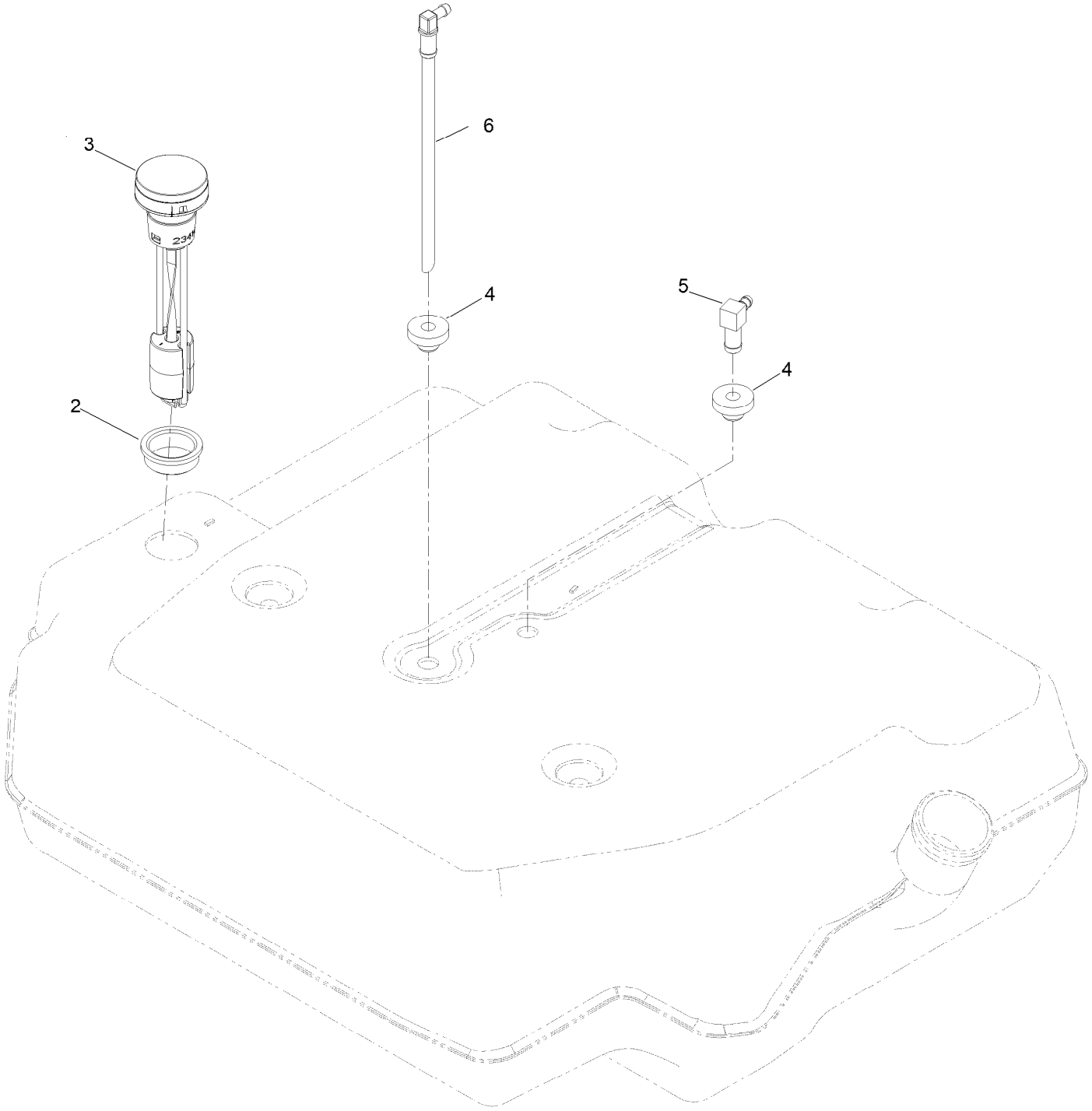

# Fuel Tank Assembly No. 147-2403 (continued)

| Ref. | Part Number | Qty. | Description |
|---|---|---|---|
| 2 | 133-9269 | 1 | Grommet-Fuel |
| 3 | 139-8058 | 1 | Gauge-Fuel |
| 4 | 46-6560 | 2 | Bushing |
| 5 | 126-9057 | 1 | Fitting-90 DEG |
| 6 | 140-4955 | 1 | Connector Elbow-90 DEG |

# Seat Mount Assembly

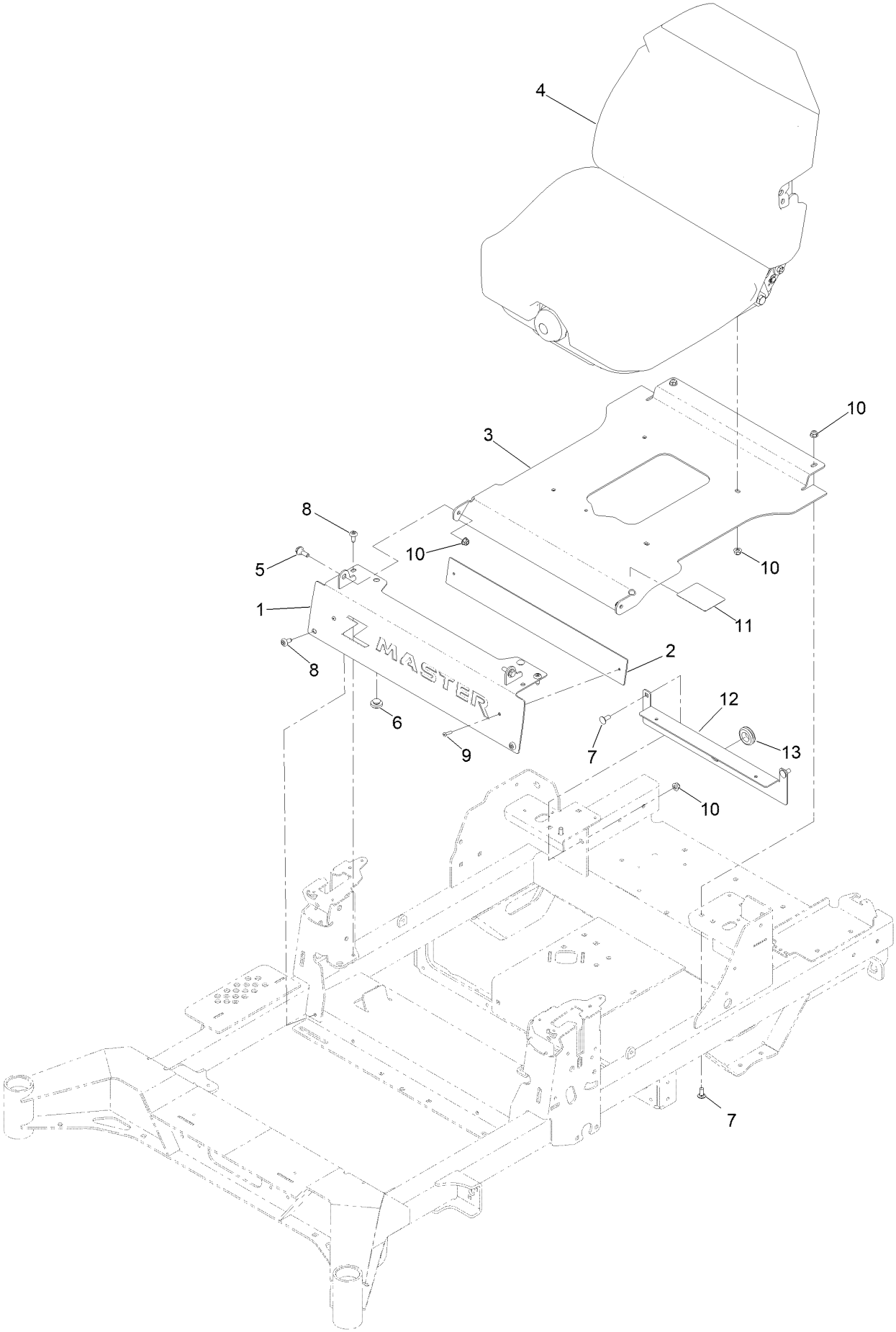

# Seat Mount Assembly (continued)

| Ref. | Part Number | Qty. | Description |
|---|---|---|---|
| 1 | 145-7025-03 | 1 | Badge Plate ASM [black] |
| 2 | 147-4954-01 | 1 | Plate-Backer |
| 3 | 147-7354-03 | 1 | Pan-Seat |
| 4 | 147-2384 | 1 | Seat ASM-Suspension |
| 5 | 116-2670 | 2 | Screw-Shoulder |
| 6 | 135-0505 | 2 | Bumper-Seat |
| 7 | 3230-23 | 4 | Bolt-CARR |
| 8 | 138-9753 | 4 | Screw |
| 9 | 130-8451 | 2 | Rivet-Trifold |
| 10 | 104-8300 | 10 | Nut-HF, NI |
| 11 | 144-2669 | 1 | Decal-Service Aid |
| 12 | 147-2362-03 | 1 | Bracket-Firewall |
| 13 | 1-543286 | 1 | Grommet |

# Seat Assembly No. 147-2384

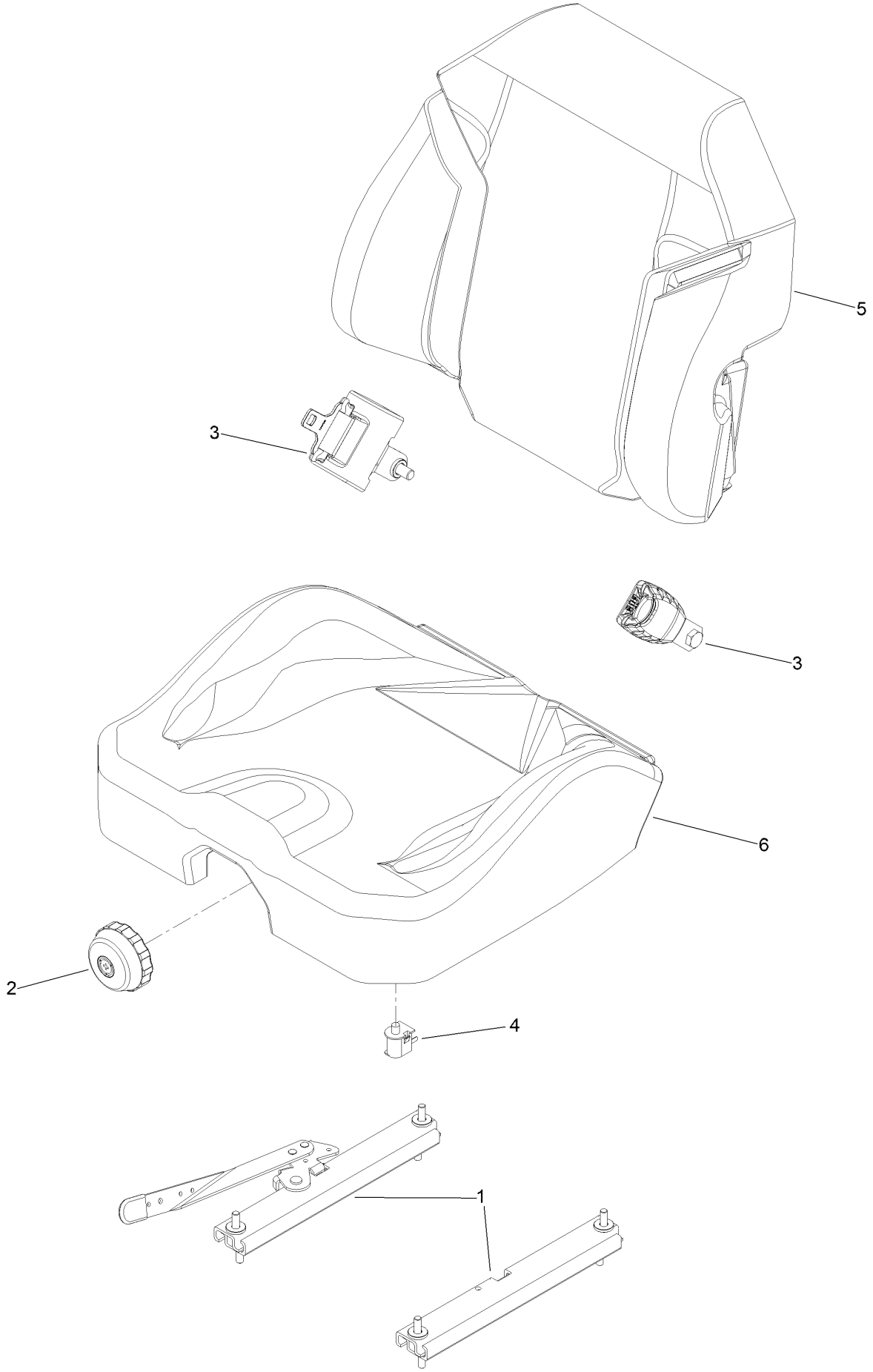

# Seat Assembly No. 147-2384 (continued)

| Ref. | Part Number | Qty. | Description |
|---|---|---|---|
| 1 | 126-8558 | 1 | Tracks-4" Travel |
| 2 | 116-8911 | 1 | Knob-Adjuster |
| 3 | 146-0595 | 1 | Seat Belt Kit |
| 4 | 82-2190 | 1 | Switch-Bail |
| 5 | 147-7367 | 1 | Cover-Back, Seat |
| 6 | 147-7368 | 1 | Cover-Bottom, Suspension Seat |

# Motion Control Assembly

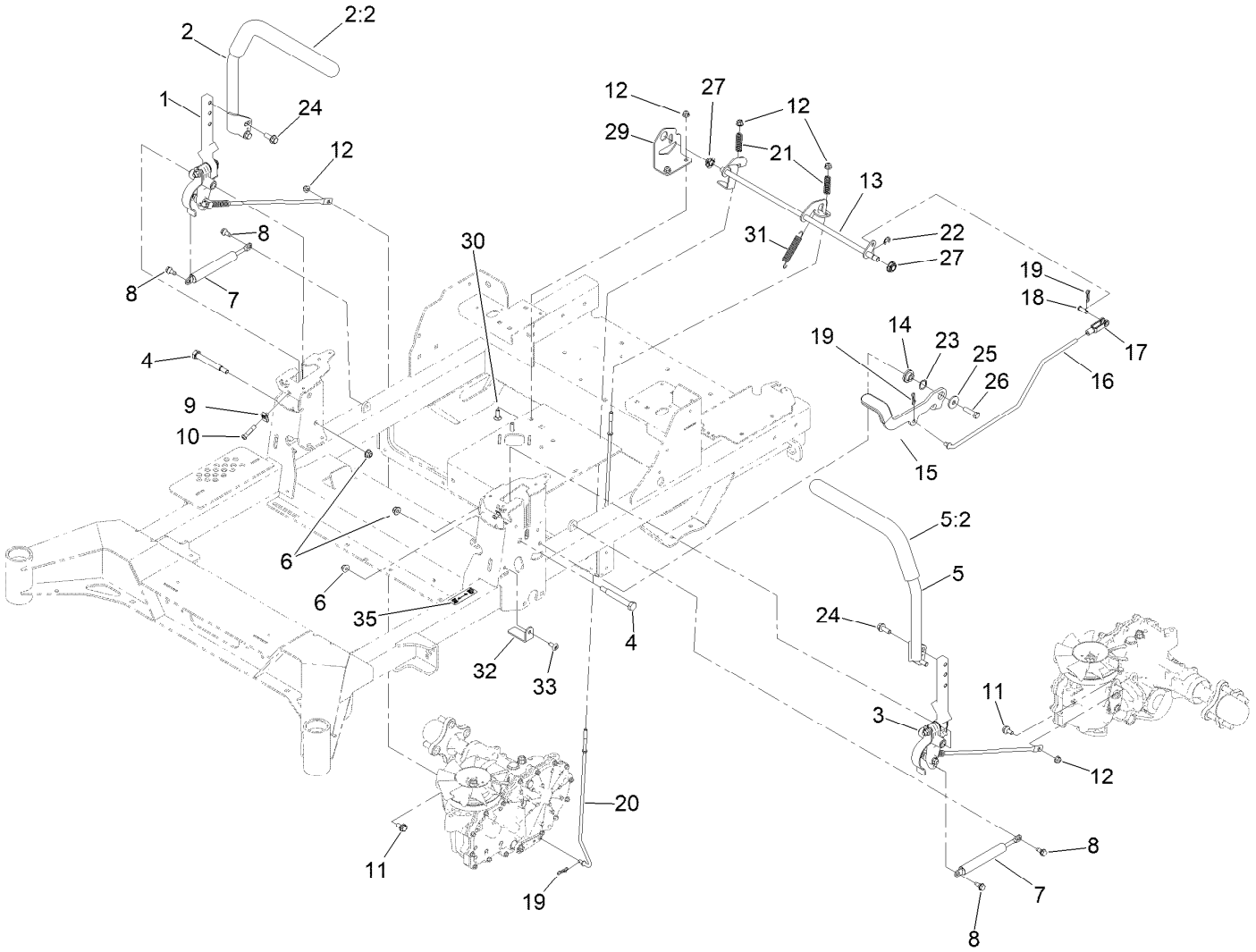

# Motion Control Assembly (continued)

| Ref. | Part Number | Qty. | Description |
|---|---|---|---|
| 1 | 145-5725 | 1 | Motion Control ASM-RH |
| 2 | 147-2390 | 1 | RH Handle ASM |
| 2:2 | 109-5668 | 1 | Grip-Lever, Control |
| 3 | 145-5724 | 1 | Motion Control ASM-LH |
| 4 | 115-5099 | 2 | Bolt-Pivot |
| 5 | 147-2391 | 1 | LH Handle ASM |
| 5:2 | 109-5668 | 1 | Grip-Lever, Control |
| 6 | 104-8301 | 3 | Nut-HF, NI |
| 7 | 142-6851 | 2 | Damper |
| 8 | 126-4424 | 4 | Screw-Shoulder |
| 9 | 112-3306 | 2 | Nut |
| 10 | 126-4299 | 2 | Screw-HSBH |
| 11 | 37-8771 | 2 | Bolt-Shoulder, HF |
| 12 | 104-8300 | 6 | Nut-HF, NI |
| 13 | 145-5719 | 1 | Shaft-Brake |
| 14 | 126-5989 | 1 | Pivot-Flange |
| 15 | 126-9490 | 1 | Lever-Brake (With Grip) |
| 16 | 145-5722 | 1 | Linkage-Brake, Upper |
| 17 | 1-303105 | 1 | Yoke-Adjustable |
| 18 | 1-808280 | 1 | Pin-Clevis |
| 19 | 119-1415 | 4 | Pin-Cotter, Locking |
| 20 | 126-7217 | 2 | Linkage-Brake, Lower |
| 21 | 109-7694 | 2 | Spring-Compression |
| 22 | 32120-47 | 1 | Ring-Retaining, External |
| 23 | 119-4164 | 1 | Washer-Wave |
| 24 | 3234-42 | 4 | Screw-HHF |
| 25 | 2844 | 1 | Washer |
| 26 | 323-8 | 1 | Screw-HH |
| 27 | 126-5820 | 2 | Bearing-Spherical |
| 29 | 145-5726 | 1 | Bracket-Brake |
| 30 | 3230-22 | 2 | Screw-CARR |
| 31 | 109-7124 | 1 | Spring-Extension |
| 32 | 145-3685 | 2 | Plate-Stop, Rtn |
| 33 | 138-9753 | 2 | Screw |
| 35 | 115-9625 | 1 | Decal-Brake, Parking |

# Left and Right Motion Control Assembly

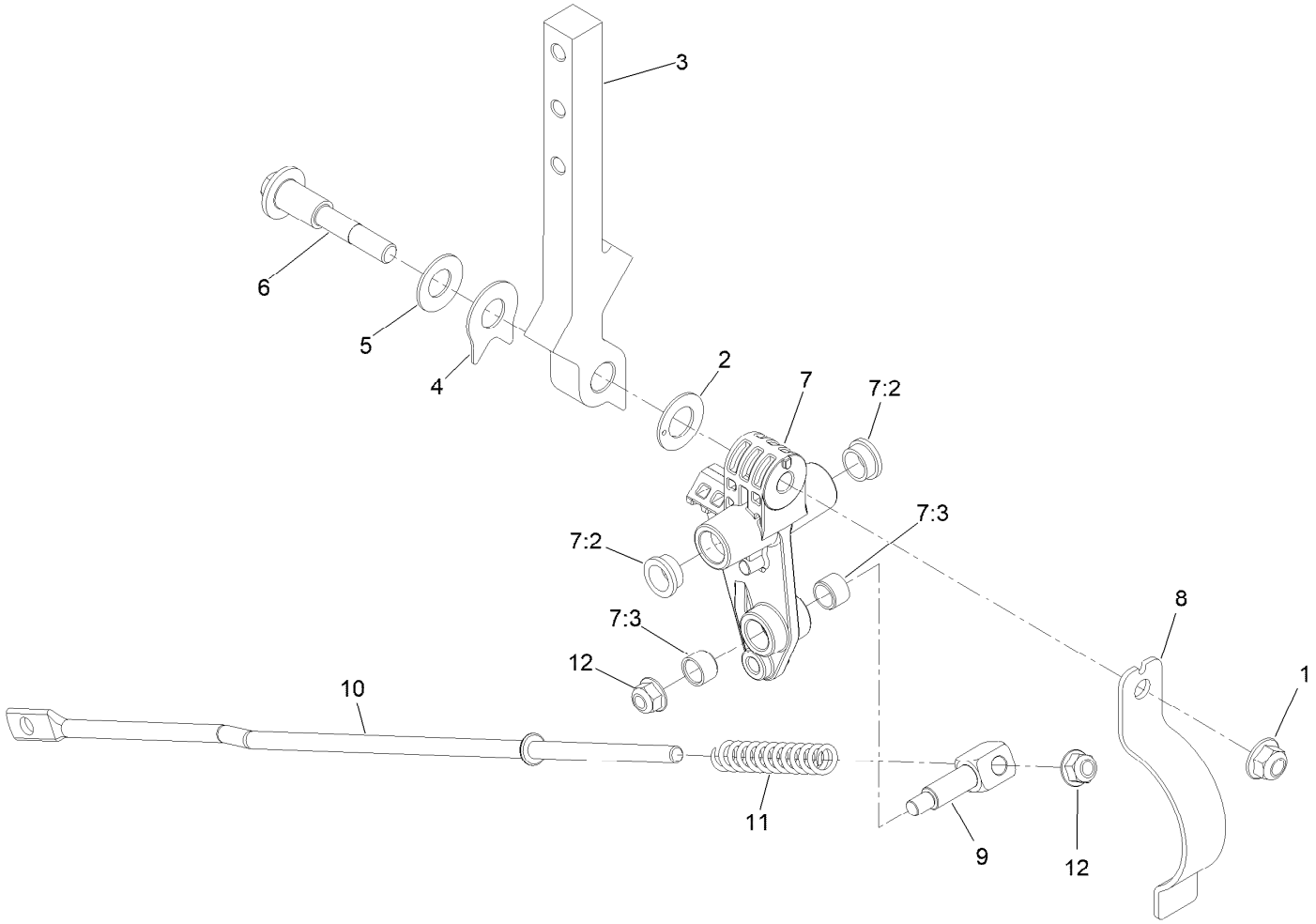

# Left and Right Motion Control Assembly (continued)

| Ref. | Part Number | Qty. | Description |
|---|---|---|---|
| 1 | 104-8301 | 1 | Nut-HF, NI |
| 2 | 126-7296 | 1 | Washer-Friction |
| 3 | 147-2389 | 1 | Arm-Control |
| 4 | 142-8478 | 1 | Spacer, Anti-Rotation |
| 5 | 119-8925 | 1 | Washer-Belleville |
| 6 | 117-1198 | 1 | Bolt-Pivot |
| 7 | 145-5798 | 1 | ASM-Control Arm |

| Ref. | Part Number | Qty. | Description |
|---|---|---|---|
| 7:2 | 126-8909 | 2 | Bushing |
| 7:3 | 1-413152 | 2 | Bushing-Sleeve |
| 8 | 145-5799 | 1 | Spring-Rtn |
| 9 | 126-5434 | 1 | Swivel |
| 10 | 145-5723 | 1 | Link-Control |
| 11 | 126-8195 | 1 | Spring-Return, Neutral |
| 12 | 104-8300 | 2 | Nut-HF, NI |

# Front Caster Wheel Assembly

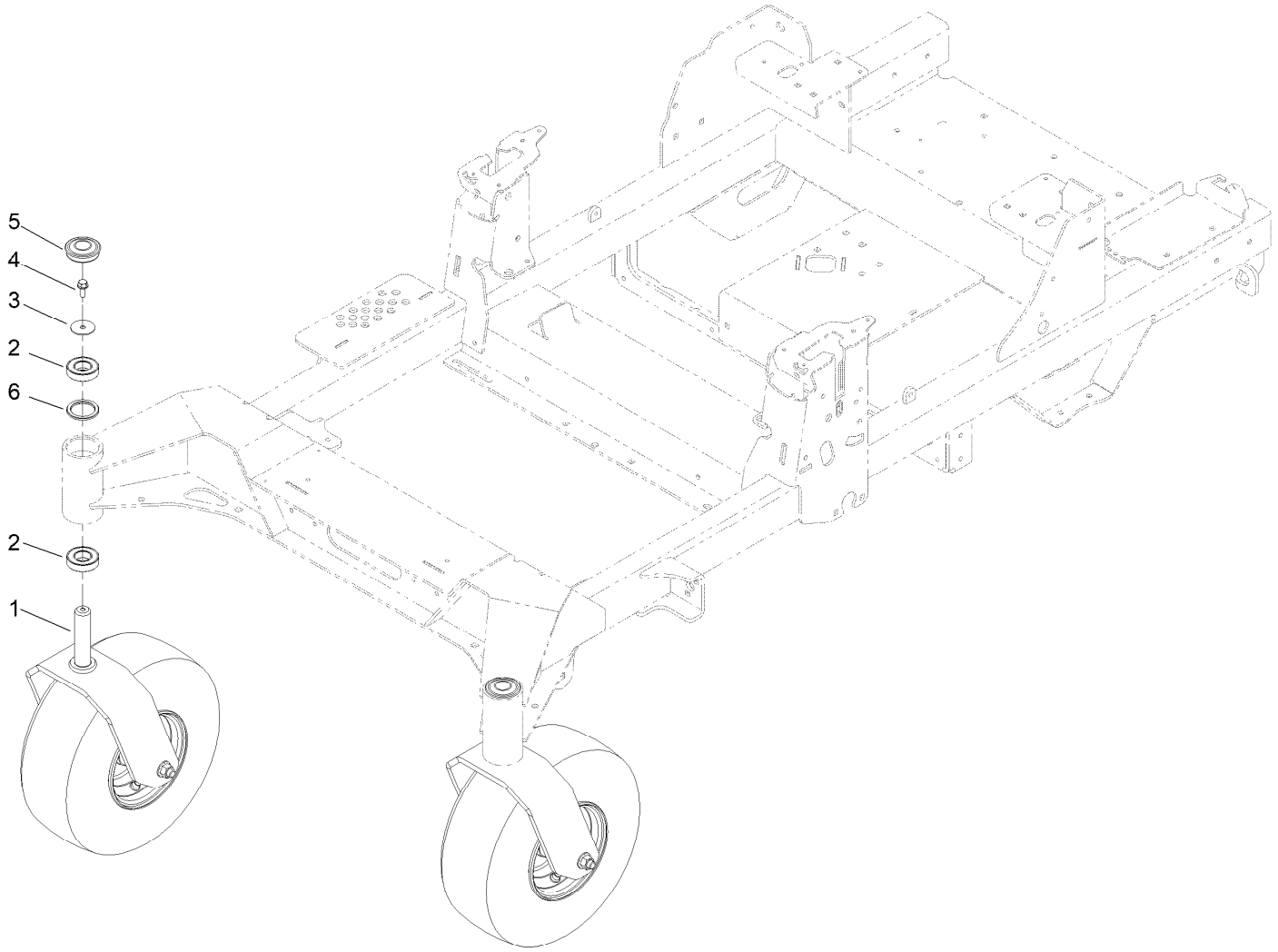

# Front Caster Wheel Assembly (continued)

| Ref. | Part Number | Qty. | Description |
|---|---|---|---|
| 1 | | 2 | Front Caster W/ Fork ASM ● |
| 2 | 109-3678 | 4 | Bearing-Ball |
| 3 | 3256-68 | 2 | Washer-Flat |
| 4 | 100-1668 | 2 | Screw-HHF |
| 5 | 144-0375 | 2 | Cap-Grease |
| 6 | 145-3660 | 2 | Spacer-Bearing |

● Not serviced separately

# Caster and Wheel Assembly

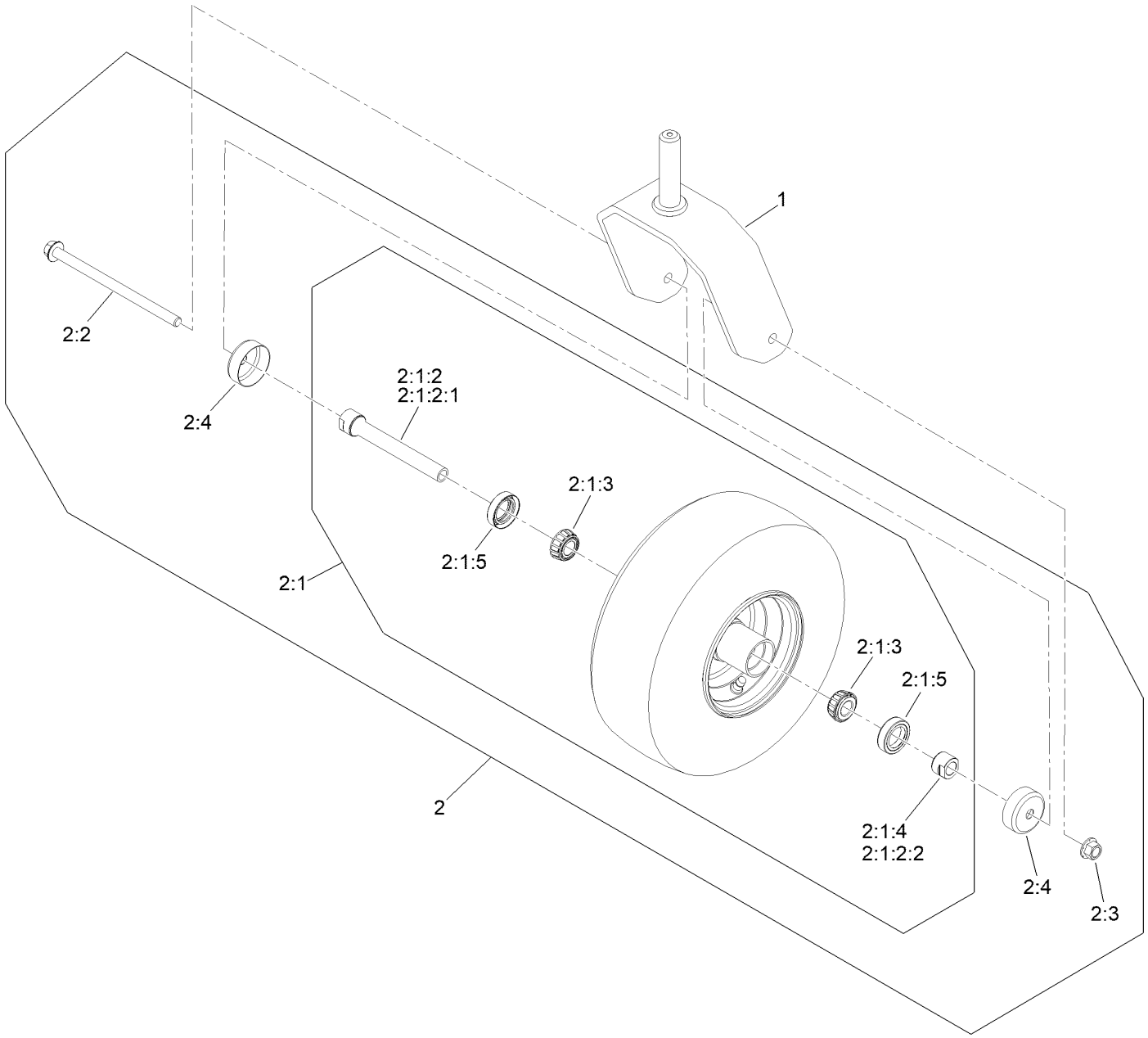

# Caster and Wheel Assembly (continued)

| Ref. | Part Number | Qty. | Description |
|---|---|---|---|
| 1 | 142-7827-01 | 1 | Fork-Caster |
| 2 | 140-4896 | 1 | Semi Pneumatic ASM 13X6.50-6 |
| 2:1 | | 1 | Wheel And Bearings ASM ● |
| 2:1:2 | 126-7796 | 1 | Caster Axle ASM |
| 2:1:2:1 | 126-5220 | 1 | Axle-Caster |
| 2:1:2:2 | 103-3051 | 1 | Spacer-Nut |
| 2:1:3 | 1-633585 | 2 | Bearing-Cone, Taper |
| 2:1:4 | 103-3051 | 1 | Spacer-Nut |
| 2:1:5 | 103-0063 | 2 | Seal-Caster |
| 2:2 | 126-5389 | 1 | Screw-HHF |
| 2:3 | 99-5107 | 1 | Nut-HF Nylock |
| 2:4 | 103-2768 | 2 | Guard-Seal |

● Not serviced separately

# Rear Wheel Assembly

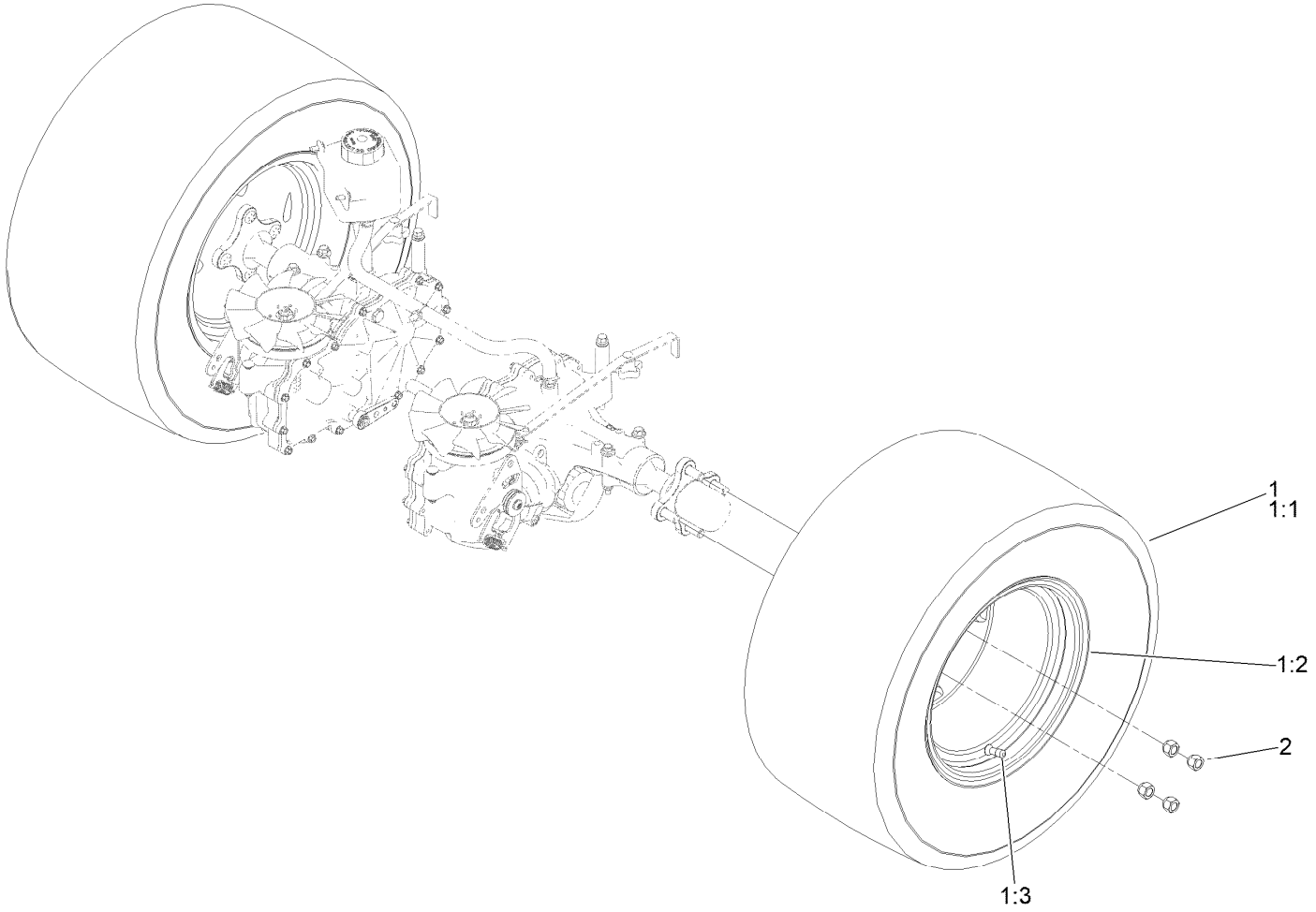

# Rear Wheel Assembly (continued)

| Ref. | Part Number | Qty. | Description |
|---|---|---|---|
| 1 | 144-6986 | 2 | ASM-Voodoo Trac 24X12-12 |
| 1:1 | 144-6963 | 1 | Tire-Voodoo |
| 1:2 | 144-6606 | 1 | Wheel |
| 1:3 | 232-27 | 1 | Stem-Valve |
| 2 | 242-50 | 8 | Nut-Lug |

# Electrical Assembly

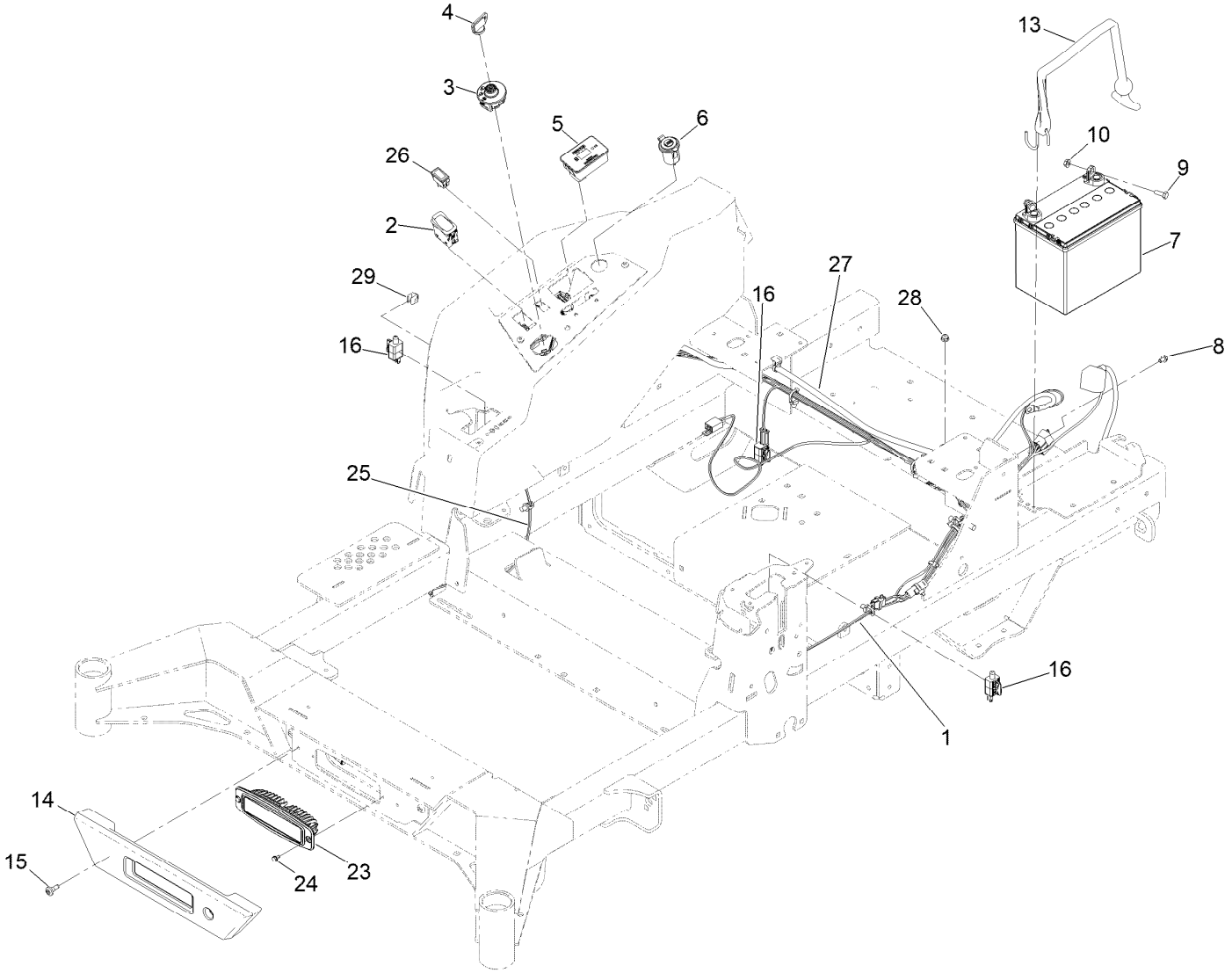

# Electrical Assembly (continued)

| Ref. | Part Number | Qty. | Description |
|---|---|---|---|
| 1 | 147-2363 | 1 | Harness-Wire, Zmaster |
| 2 | 139-6368 | 1 | Switch-Rocker, On-None-On |
| 3 | 137-4100 | 1 | Switch-Ignition |
| 4 | 63-8360 | 1 | Key-Ignition |
| 5 | 116-5609 | 1 | Module ASM |
| 6 | 140-7955 | 1 | Port-Power, USB |
| 7 | 104-8162 | 1 | Battery |
| 8 | 99-8445 | 1 | Screw-HWH |
| 9 | 321-4 | 2 | Screw-HH |
| 10 | 32128-33 | 2 | Nut-HF |
| 13 | 142-8697 | 1 | Strap, Bungee |
| 14 | 140-4993 | 1 | Bumper-Front |
| 15 | 135-2015 | 2 | Screw-Shoulder |
| 16 | 110-6765 | 3 | Switch |
| 23 | 139-8089 | 1 | Light - Flush Mount |
| 24 | 104-2065 | 2 | Screw-HWH |
| 25 | 140-1213 | 1 | Harness-Wire, Light Kit |
| 26 | 92-8875 | 1 | Switch-Rocker |
| 27 | 147-2364 | 1 | Harness-Wire, Adapter |
| 28 | 104-7201 | 1 | Nut-HF, NI |
| 29 | 32180-082 | 1 | Clip-Edge W/Tie, Perpendicular |
| 99 | 1-603511 | 1 | Keys-Ignition (Spare Pair) ● ■ |

● Not illustrated

■ Optional Equipment

# Wire Harness Assembly No. 147-2363

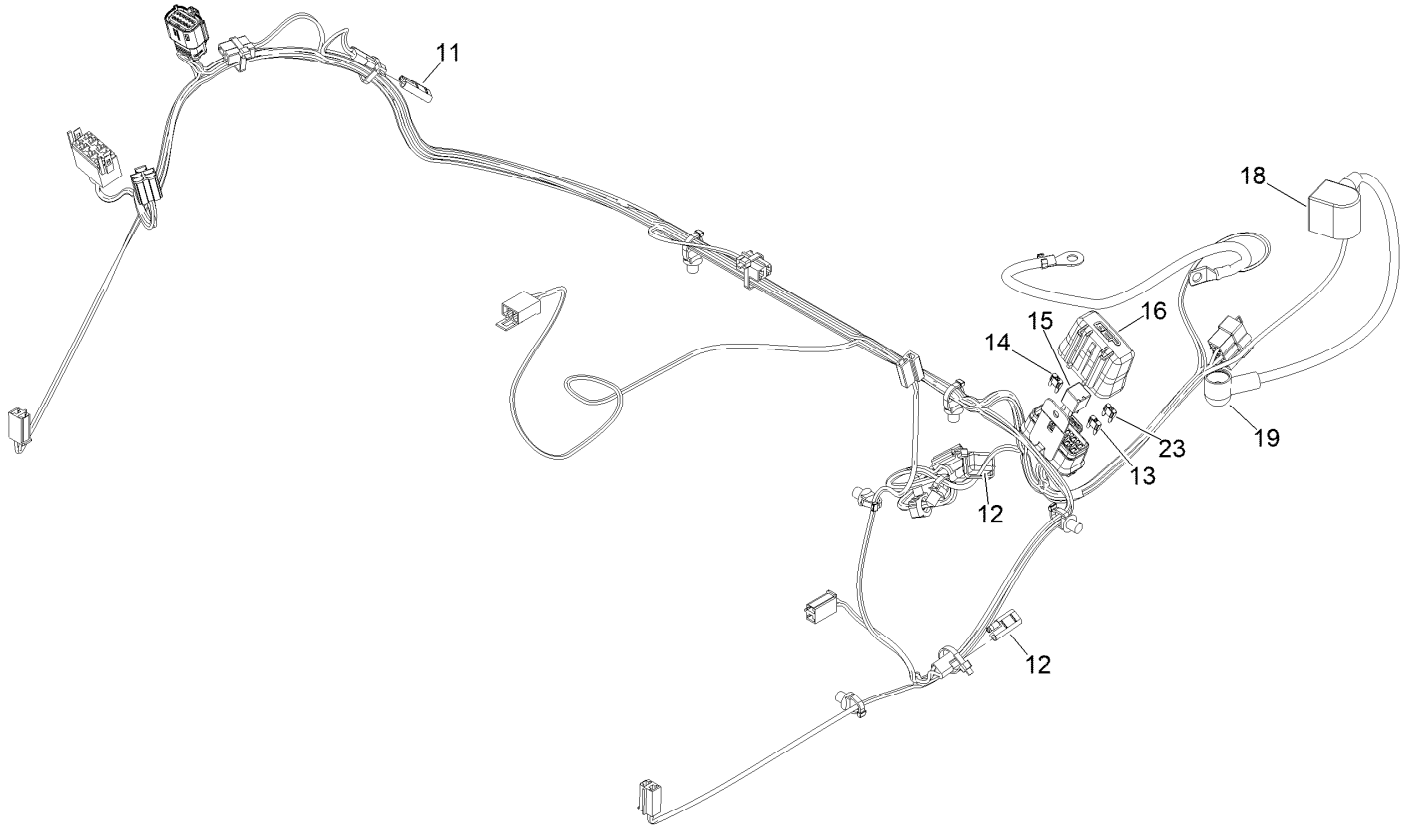

# Wire Harness Assembly No. 147-2363 (continued)

| Ref. | Part Number | Qty. | Description |
|---|---|---|---|
| 11 | 116-0053 | 3 | Cap-Plug |
| 12 | 103-3895 | 1 | Diode |
| 13 | 121-8867 | 1 | Fuse-Mini Blade, 15 Amp |
| 14 | 121-8868 | 1 | Fuse-Mini Blade, 20 Amp |
| 15 | 126-3991 | 1 | Relay-Micro |
| 16 | 32180-176 | 1 | Cover-Block, Fuse |
| 18 | 126-8876 | 1 | Insulator-Battery |
| 19 | 1-543393 | 1 | Insulator-Solenoid |
| 23 | 121-8869 | 1 | Fuse-Mini Blade, 25 Amp |

# Deck Lift Assembly

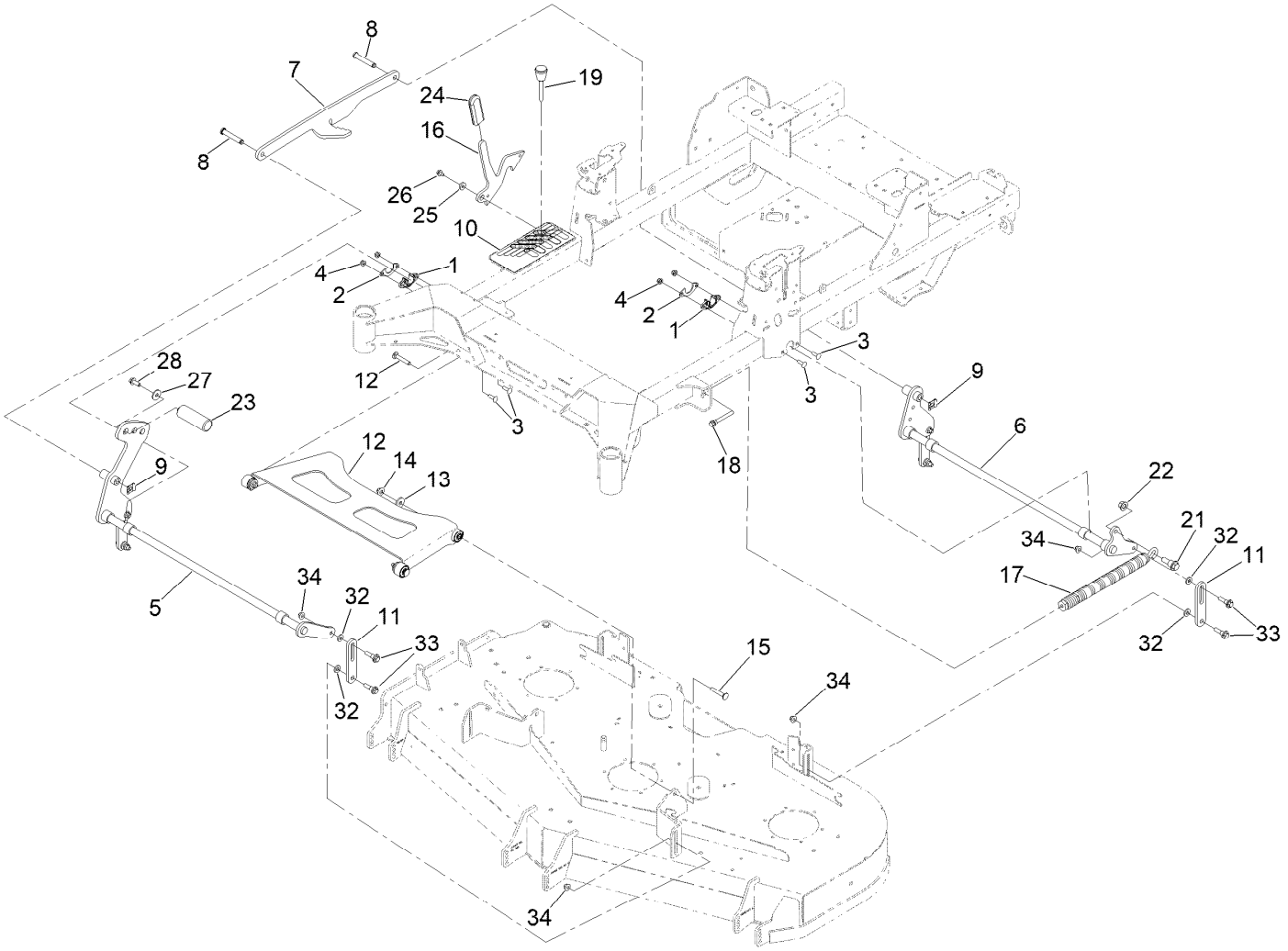

# Deck Lift Assembly (continued)

| Ref. | Part Number | Qty. | Description |
|---|---|---|---|
| 1 | 139-5872 | 4 | Bearing-Flange |
| 2 | 116-2887 | 4 | Gusset-Lift, Deck |
| 3 | 3230-22 | 8 | Screw-CARR |
| 4 | 104-8300 | 8 | Nut-HF, NI |
| 5 | 139-8050-03 | 1 | Front Deck Lift Shaft ASM |
| 6 | 140-4975-03 | 1 | Shaft-Lift, Deck |
| 7 | 126-4639-03 | 1 | Link-HOC |
| 8 | 126-9181 | 2 | Pin-Clevis |
| 9 | 138-8491 | 2 | Clip-Pin |
| 10 | 147-2360 | 1 | Decal-HOC |
| 11 | 145-5702-03 | 4 | Link-Lift, Deck |
| 12 | 140-1179 | 1 | Deck Strut W/ Bushings ASM |
| 13 | 1-373034 | 2 | Washer |
| 14 | 109-6658 | 2 | Nut-Flange, NI |
| 15 | 3231-7 | 2 | Screw-CARR |
| 16 | 145-8475-03 | 1 | Plate-Transport Lock |
| 17 | 116-0886 | 1 | Spring-Extension |
| 18 | 92-7674 | 1 | Bolt-Shoulder |
| 19 | 126-5401 | 1 | Pin-HOC |
| 21 | 116-0780 | 1 | Screw-Shoulder, HHF |
| 22 | 99-5107 | 1 | Nut-HF Nylock |
| 23 | 140-4959 | 1 | Pedal-Foot Lift |
| 24 | 132-4749 | 1 | Grip-Lever |
| 25 | 104-7658 | 1 | Spacer |
| 26 | 9266934 | 1 | Screw |
| 27 | 2844 | 1 | Washer |
| 28 | 3234-42 | 1 | Screw-HHF |
| 32 | 43-0940 | 8 | Spacer |
| 33 | 130-0742 | 8 | Bolt-Shoulder |
| 34 | 104-8301 | 8 | Nut-HF, NI |

# Deck Strut Assembly No. 140-1179

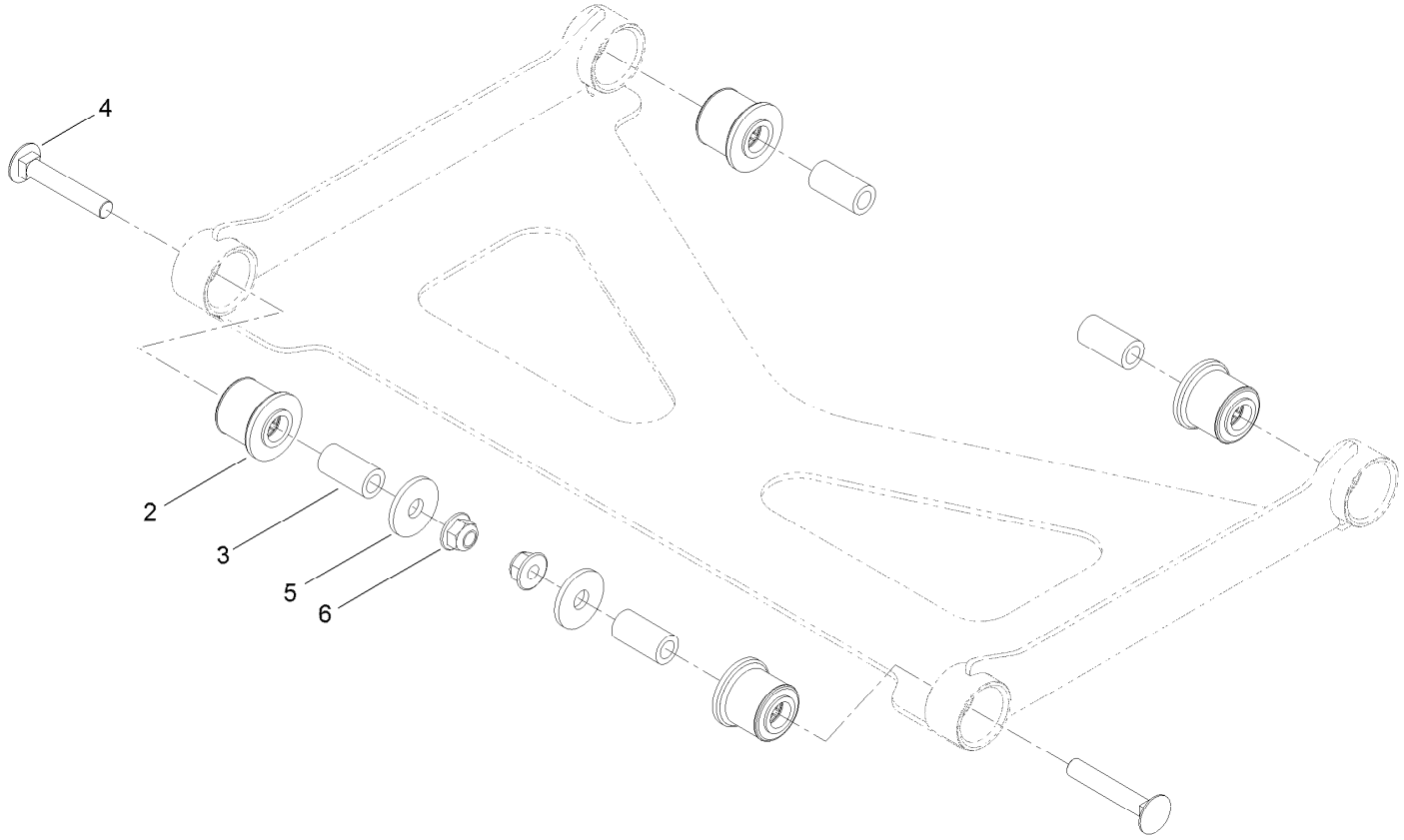

# Deck Strut Assembly No. 140-1179 (continued)

| Ref. | Part Number | Qty. | Description |
|---|---|---|---|
| 2 | 126-8360 | 4 | Bushing-Rubber, Suspension |
| 3 | 108-6544 | 4 | Spacer |
| 4 | 3231-7 | 2 | Screw-CARR |
| 5 | 2844 | 2 | Washer |
| 6 | 104-8301 | 2 | Nut-HF, NI |

# Engine, Clutch and Muffler Assembly

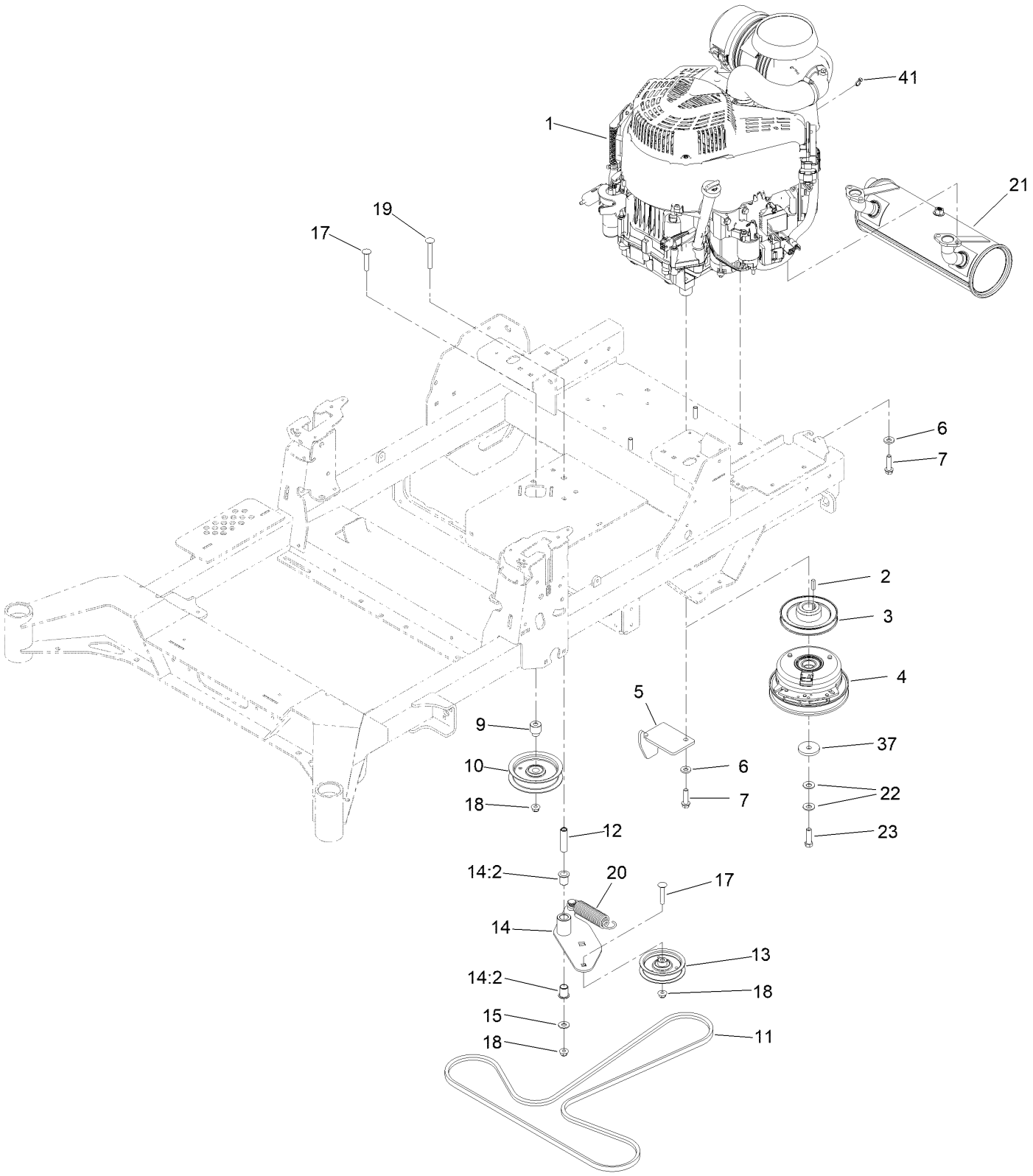

# Engine, Clutch and Muffler Assembly (continued)

| Ref. | Part Number | Qty. | Description |
|---|---|---|---|
| 1 | | 1 | Engine, 810 Vanguard EFI ●■ |
| 2 | 1-807259 | 1 | Key |
| 3 | 126-5358 | 1 | Sheave (W/Hub) |
| 4 | 147-2401 | 1 | Clutch 6.75, 105 Ftlb, 1.125 Dd |
| 5 | 140-1190 | 1 | Anchor-Clutch |
| 6 | 98-5975 | 4 | Washer-Belleville |
| 7 | 32144-102 | 4 | Screw-HWH |
| 9 | 126-7684 | 1 | Bushing-Idler |
| 10 | 132-4718 | 1 | Pulley-Idler, Flat |
| 11 | 145-5727 | 1 | Belt-V |
| 12 | 139-6690 | 1 | Bushing, Idler Pivot |
| 13 | 140-4964 | 1 | Pulley-Idler, Flat |
| 14 | 145-5731 | 1 | Idler Arm ASM |
| 14:2 | 138-2573 | 1 | Bushing-Flange |
| 15 | 3256-4 | 1 | Washer-Flat |
| 17 | 117-9971 | 2 | Bolt-Carriage |
| 18 | 104-8301 | 3 | Nut-HF, NI |
| 19 | 3231-42 | 1 | Screw-CARR |
| 20 | 138-7264 | 1 | Spring-Extension |
| 21 | 147-2412 | 1 | Muffler-Briggs |
| 22 | 1-603610 | 2 | Washer-Spring |
| 23 | 109-9761 | 1 | Screw-HH |
| 37 | 109-6919 | 1 | Washer-Plain |
| 41 | 1-303287 | 1 | Tie-Cable |

● Not serviced separately

■ Obtain parts from www.briggsandstratton.com

# Decal Assembly

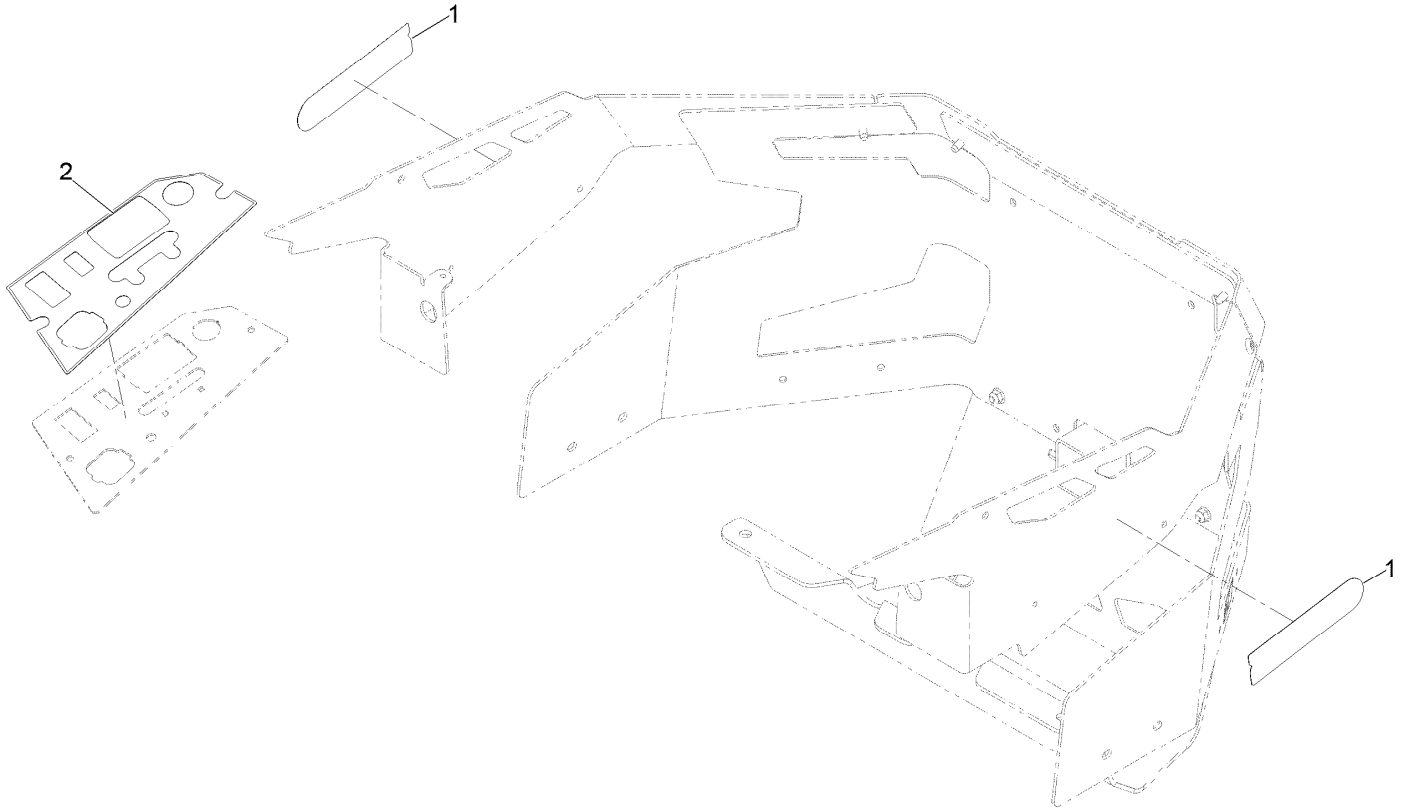

# Decal Assembly (continued)

| Ref. | Part Number | Qty. | Description |
|---|---|---|---|
| 1 | 145-8407 | 2 | Decal-2000 Series |
| 2 | 147-4953 | 1 | Decal-Panel, Control |

# Deck Assembly

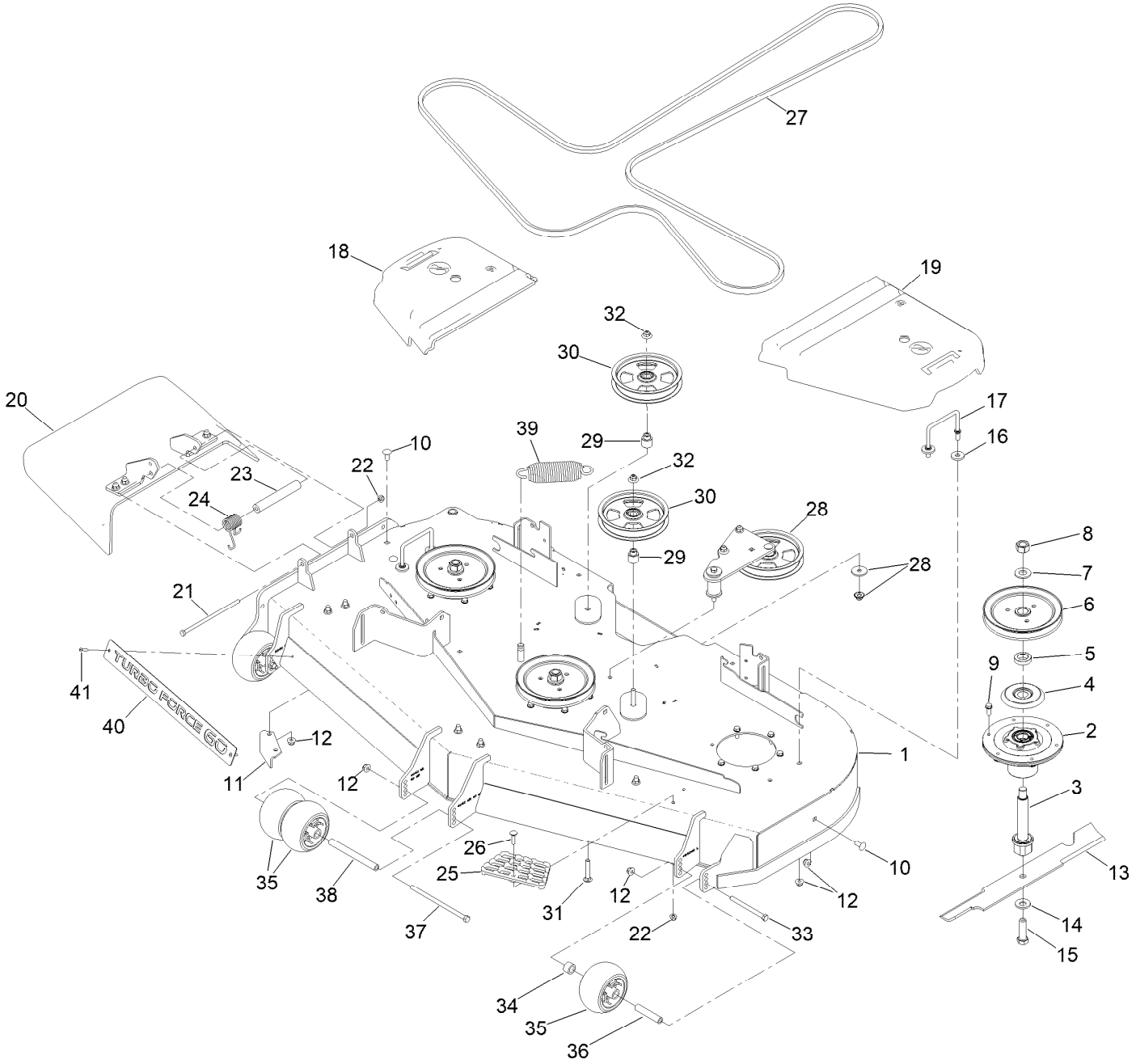

# Deck Assembly (continued)

| Ref. | Part Number | Qty. | Description |
|---|---|---|---|
| 1 | 147-7373 | 1 | Deck Decal ASM |
| 2 | 139-2357 | 3 | Spindle ASM |
| 3 | 133-2126 | 3 | Shaft-Spindle |
| 4 | 117-7210 | 3 | Shield-Bearing |
| 5 | 147-2381 | 3 | Spacer-Pulley |
| 6 | 138-6059 | 3 | Sheave-Drive, Blade |
| 7 | 103-2802 | 3 | Washer |
| 8 | 116-7306 | 3 | Nut-Hex |
| 9 | 32144-41 | 18 | Screw-Taptite |
| 10 | 3231-27 | 9 | Screw-CARR |
| 11 | 107-8541-01 | 1 | Baffle-Discharge |
| 12 | 104-8301 | 16 | Nut-HF, NI |
| 13 | 133-2127 | 3 | Blade-Rotary, 20.5In (Hi Flow) |
| 14 | 125-1736 | 3 | Washer-Belleville |
| 15 | 51-4060 | 3 | Screw-Blade |
| 16 | 1-373034 | 4 | Washer |
| 17 | 109-6982 | 2 | Wireform-Cover |
| 18 | 116-0094 | 1 | Cover-Belt, RH |
| 19 | 109-6938 | 1 | Cover-Belt, LH |
| 20 | 144-2635 | 1 | Rubber Deflector ASM |
| 21 | 322-50 | 1 | Screw-HH |
| 22 | 104-8300 | 2 | Nut-HF, NI |
| 23 | 105-4622 | 1 | Spacer |
| 24 | 108-4052 | 1 | Spring-Torsion |
| 25 | 126-4781-03 | 1 | Step-Deck |
| 26 | 3230-3 | 1 | Screw-CARR |
| 27 | 144-0357 | 1 | Belt-V |
| 28 | 139-1087 | 1 | Idler Arm ASM |
| 29 | 139-8061 | 2 | Bushing, Idler |
| 30 | 132-9424 | 2 | Pulley-Idler, Flat |
| 31 | 3231-7 | 2 | Screw-CARR |
| 32 | 109-6658 | 2 | Nut-Flange, NI |
| 33 | 323-23 | 2 | Screw-HH |
| 34 | 133-2128 | 2 | Tube-Spacer |
| 35 | 1-603299 | 4 | Roller-Scalp, Anti |
| 36 | 133-2129 | 2 | Tube-Shafting |
| 37 | 108-5388 | 1 | Screw-HH |
| 38 | 98-5967 | 1 | Spacer-Wheel |
| 39 | 116-6317 | 1 | Spring-Extension |
| 40 | 147-4631-03 | 1 | Plate-Turbo Force |
| 41 | 130-8451 | 2 | Rivet-Trifold |

# Deck Decal Assembly No. 147-7373

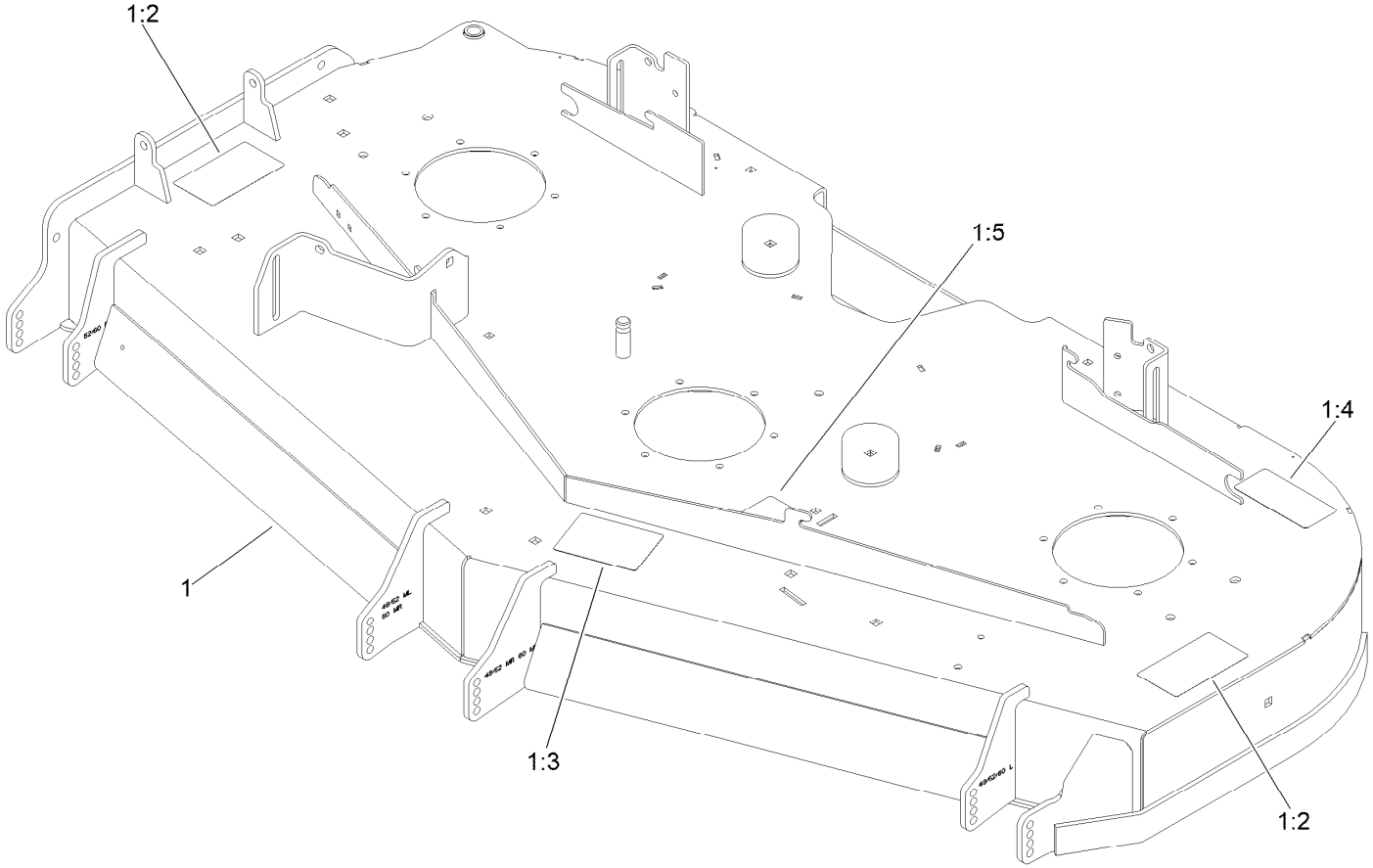

# Deck Decal Assembly No. 147-7373 (continued)

| Ref. | Part Number | Qty. | Description |
|---|---|---|---|
| 1 | | 1 | ASM-Deck W/Decals ● |
| 1:2 | 117-3848 | 2 | Decal-Danger |
| 1:3 | 127-0326 | 1 | Decal-Scalp, Anti |
| 1:4 | 93-7818 | 1 | Decal-Torque, Blade Bolt |
| 1:5 | 109-6035 | 1 | Decal-Routing, Belt |

● Not serviced separately

# Spindle Assembly No. 139-2357

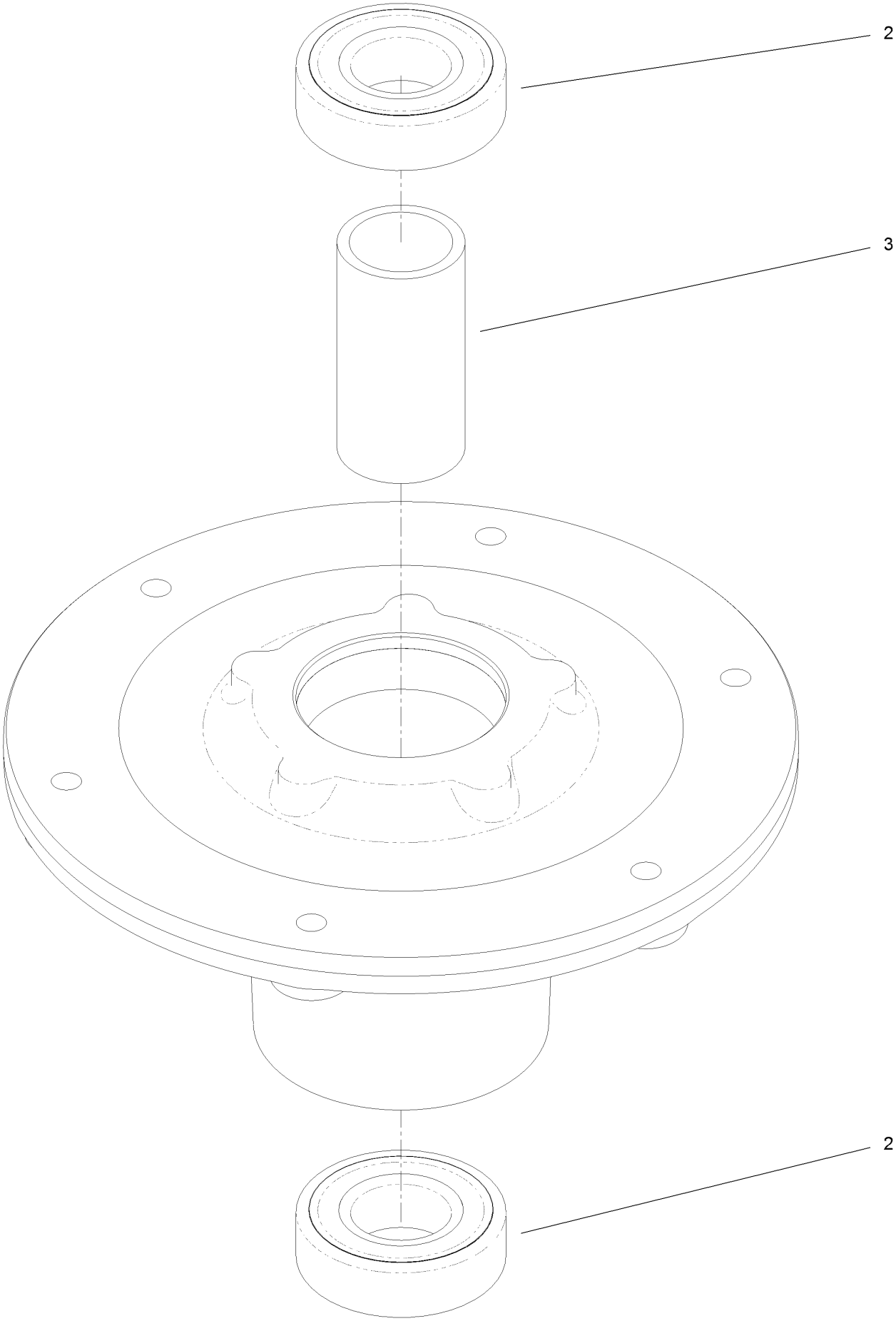

# Spindle Assembly No. 139-2357 (continued)

| Ref. | Part Number | Qty. | Description |
|---|---|---|---|
| 2 | 116-0720 | 2 | Bearing-Ball |
| 3 | 138-7220 | 1 | Spacer-Bearing |

# Deflector Assembly No. 144-2635

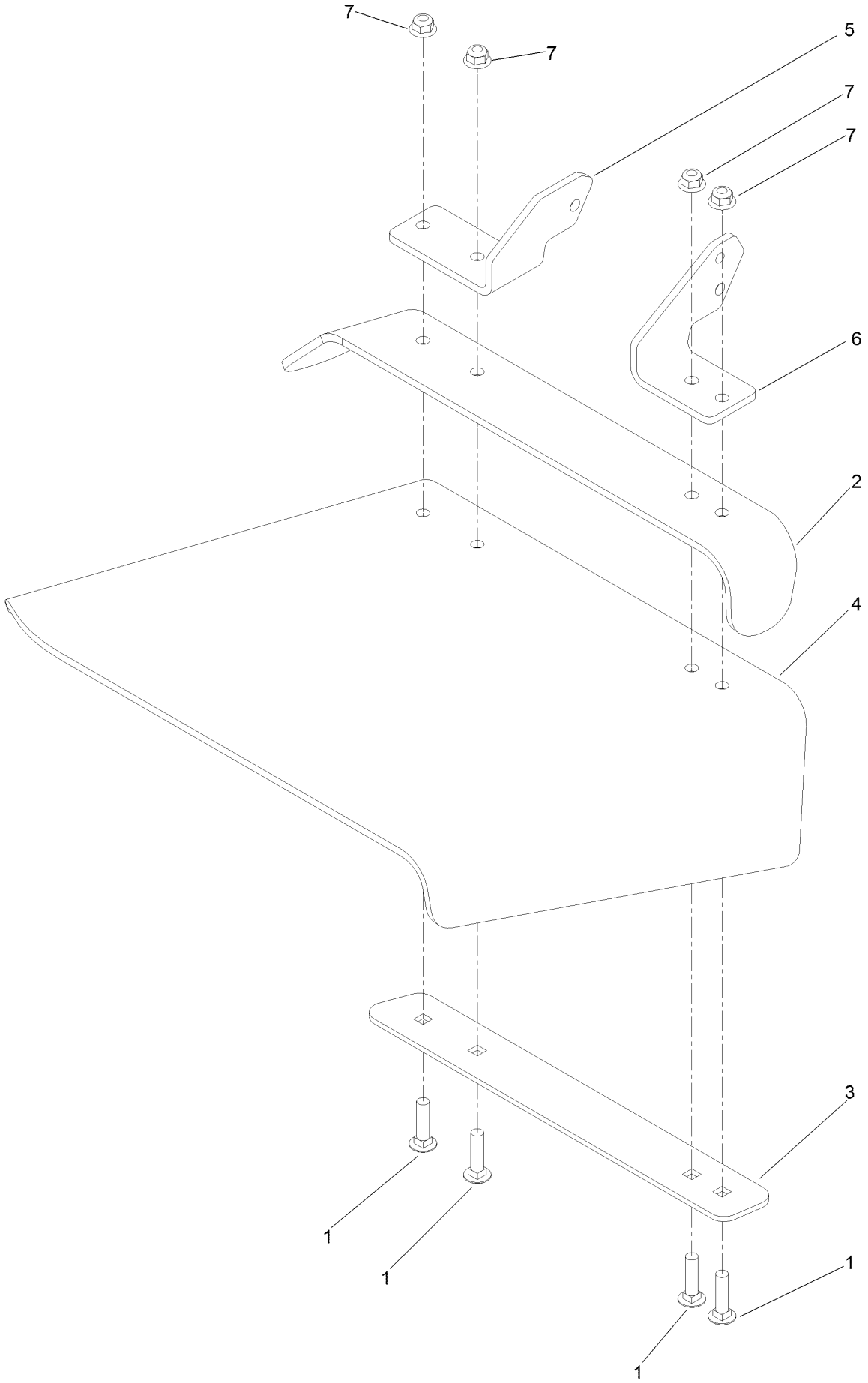

# Deflector Assembly No. 144-2635 (continued)

| Ref. | Part Number | Qty. | Description |
|---|---|---|---|
| 1 | 3231-4 | 4 | Screw-CARR |
| 2 | 106-3246-01 | 1 | Deflector |
| 3 | 106-3248-03 | 1 | Strap-Discharge |
| 4 | 139-8114 | 1 | Deflector-Deck, Rubber |
| 5 | 108-4059-01 | 1 | Plate-Hinge, Rear |
| 6 | 106-3253-01 | 1 | Plate-Hinge, Front |
| 7 | 104-8301 | 4 | Nut-HF, NI |

# Idler Arm Assembly No. 139-1087

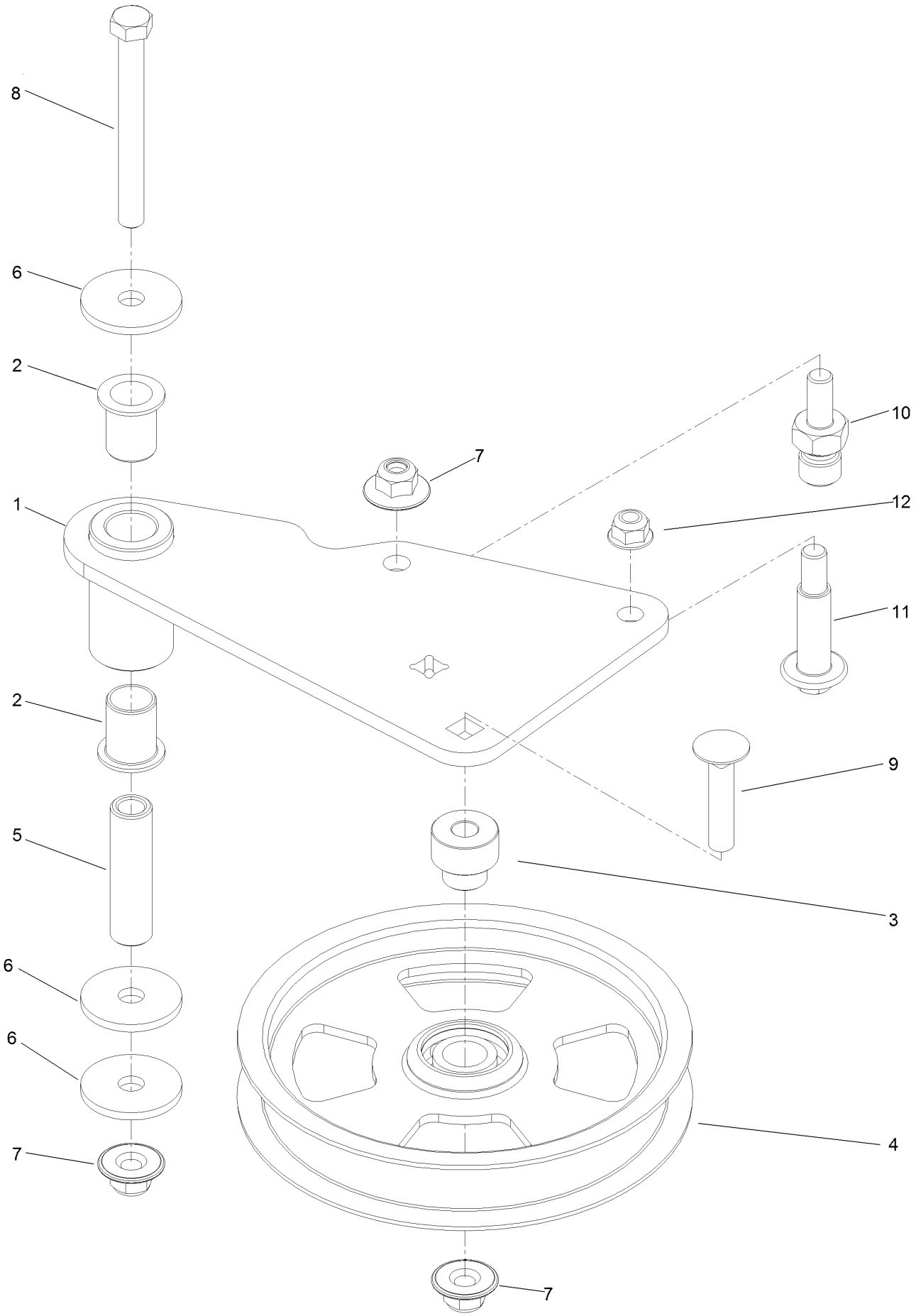

# Idler Arm Assembly No. 139-1087 (continued)

| Ref. | Part Number | Qty. | Description |
|---|---|---|---|
| 1 | 139-1086 | 1 | Idler Arm ASM |
| 2 | 138-2573 | 2 | Bushing-Flange |
| 3 | 139-8060 | 1 | Bushing, Idler |
| 4 | 132-9424 | 1 | Pulley-Idler, Flat |
| 5 | 139-6690 | 1 | Bushing, Idler Pivot |
| 6 | 1-213069 | 3 | Washer |
| 7 | 109-6658 | 3 | Nut-Flange, NI |
| 8 | 323-15 | 1 | Screw-HH |
| 9 | 3231-5 | 1 | Screw-CARR |
| 10 | 132-4729 | 1 | Anchor-Spring, Short |
| 11 | 136-9028 | 1 | Bolt-Shoulder, HWH |
| 12 | 104-8301 | 1 | Nut-HF, NI |

# Attachments and Accessories

## For 77288 — 60in Z Master Professional 2000 Series Riding Mower

| Product Name | Model/Part |
|---|---|
| Spark Arrestor Kit | 112-1688 |
| Hypr-Oil 500 (quart) | 114-4713 |
| Hypr-Oil 500 (gallon) | 114-4714 |
| Hypr-Oil 500-5 (5 gallon) | 114-4715 |
| Striper Kit | 126-7882 |
| Jack Kit | 127-6666 |
| Blade-Rotary, 20.5in (Hi Flow) | 133-2127 |
| Blade-Rotary, Atomic 20.5in | 133-2157 |
| Blade-Rotary, Recycling 20.5in | 133-2161 |
| Blade (6 Pack) 20.5in, Hi Flow | 133-2174 |
| Blade (6 Pack) 20.5in, Recycler | 133-2177 |
| Blade (6 Pack) 20.5in, Atomic | 133-2180 |
| Tweel-Turf Tire | 139-3649 |
| Recycler Kit | 139-6655 |
| Trimmer Mount | 144-2665 |
| Jack Mount Kit | 144-2676 |
| Hardtop Sun Canopy | 144-3719 |
| Handle Extension Kit | 145-3615 |
| Bucket Mount Kit, Z Master 2000 or 4000 Series Riding Mower | 147-6345 |
| Universal Mount Kit, Z Master 2000 or 4000 Series Riding Mower | 147-6346 |
| Baffle Kit, Turbo Force 60in | 147-7362 |
| Arm Rest Kit | 147-7397 |
| 2in Reciever Hitch Kit | 161-2810 |
| Bagger Kit, Z Master 2000 / 4000 | 78439 |
| Z 4000 60in Completion Kit | 78466 |

**Notes:**

**Notes:**

**Notes:**

TORO®

Count on it.