Form No. 3444-534 Rev D

TORO®

Count on it.

Parts Catalog

Proline Commercial

Walk-Behind Mower with 54in Floating Cutting Unit

Model No. 44427—Serial No. 408786427 and Up

Register at www.Toro.com.
Original Instructions (EN)

3444-534 D

Ordering Replacement Parts

To order replacement parts, please supply the part number, the quantity, and the description of each part desired.

Understanding Reference Numbers

Each identified part in an illustration has a reference number. The reference number for a part also appears in the parts list, along with other information about the part.

This catalog uses two special reference number formats, one to indicate parts in a service assembly and another to indicate the quantity of a given part in an illustration.

Service Assembly Reference Numbers

Parts in service assemblies have reference numbers in the form a:b. The a represents the reference number of the entire service assembly and the b represents a sequential number unique to each part within the service assembly.

For example, a wheel assembly might be identified by reference number 6, the tire by 6:1, the valve by 6:2, and the wheel by 6:3. When you order the assembly identified by reference number 6, you receive all parts identified by reference numbers 6:1,6:2, and 6:3. However, you may also order any part individually. Reference numbers of this type appear in illustration and in parts lists.

Reference Numbers Indicating Quantity

In an illustration, if a reference number indicates more than one part, the reference number has the form nX y. The n represents the quantity of the part, the X is the multiplication symbol, and the y represents the reference number.

For example, in an illustration, the reference number 2X 37 means that two of the parts identified by reference number 37 are indicated.

Contents

54 Inch Deck Assembly 4
Deck Decal Assembly No. 138-6807 6
Spindle Assembly No. 139-2357 8
Transmission Assembly 10
LH Transmission Assembly No. 147-0362 12
RH Transmission Assembly No. 147-0363 14
Idler Arm Assembly No. 139-2899 16
Operator Control Assembly 18
Reference Bar Assembly No. 139-1475 20
RH Control Handle Assembly No. 139-1532 22
LH Control Handle Assembly No. 139-1487 24
Brake Assembly 26
Brake Assembly No. 138-5844 28
Deck Lift Assembly 30
Hood Assembly 32
Frame Assembly 34
Engine Assembly 36
Fuel System Assembly 38
Electrical Harness and Battery Assembly 40
Attachments and Accessories 42

© 2026—The Toro® Company
8111 Lyndale Avenue South
Bloomington, MN 55420

Contact us at www.Toro.com.
Printed in the USA.
All Rights Reserved

54 Inch Deck Assembly

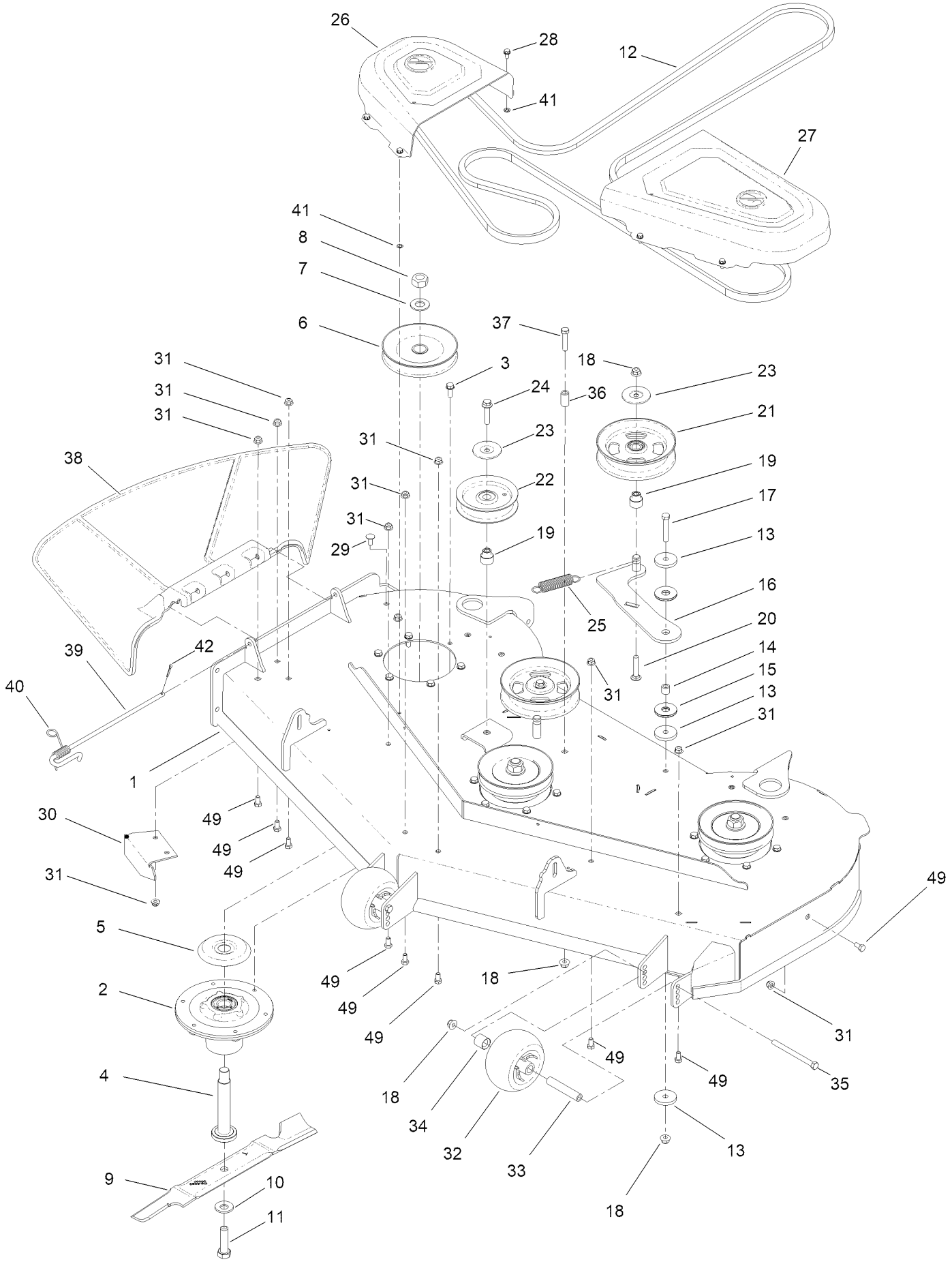

54 Inch Deck Assembly (continued)

Ref.	Part Number	Qty.	Description
1	138-6807	1	Deck ASM-54"
2	139-2357	3	Spindle ASM
3	32144-41	18	Screw-Taptite
4	115-2642	3	Shaft-Spindle
5	138-7221	3	Shield-Bearing
6	138-7223	3	Pulley
7	7-4150	3	Washer
8	3219-7	3	Nut-Hex
9	138-8889-03	3	Blade - Hi Flow, 18.75 In
10	125-1736	3	Washer-Belleville
11	51-4060	3	Screw-Blade
12	135-3215	1	Belt-V
13	110-9981	3	Washer-Plain
14	139-7933	1	Bushing-Idler
15	139-7932	2	Washer-Friction, Composite
16	139-7915	1	Idler Arm ASM
17	323-11	1	Screw-HH
18	119-4042	5	Nut-HF, NI
19	138-7227	3	Bushing-Idler
20	3231-6	1	Screw-CARR
21	132-9425	2	Pulley-Idler, Flat
22	132-4718	1	Pulley-Idler, Flat
23	126-8043	3	Shield-Dust
24	3234-19	2	Screw-HHF
25	1-323071	1	Spring-Extension
26	133-9283	1	Cover-Belt, RH
27	133-9282	1	Cover-Belt, LH
28	32144-4	8	Screw-HWH
29	137-3061	2	Bolt-CARR
30	115-9653-03	1	Baffle-Cutoff
31	119-4041	11	Nut-HF
32	1-603299	2	Roller-Scalp, Anti
33	138-7229	2	Tube-Spanner
34	104-0892	2	Spacer-Axle, Rear
35	323-23	2	Screw-HH
36	138-7230	1	Spacer-Fender
37	323-9	1	Screw-HH
38	133-1212	1	Deflector-Discharge
39	138-7231	1	Pin-Chute
40	138-7232	1	Spring-Torsion
41	1-803037	8	Nut-Retaining
42	139-2614	1	Pin-Cotter
49	322-2	9	Screw-HH

Deck Decal Assembly No. 138-6807

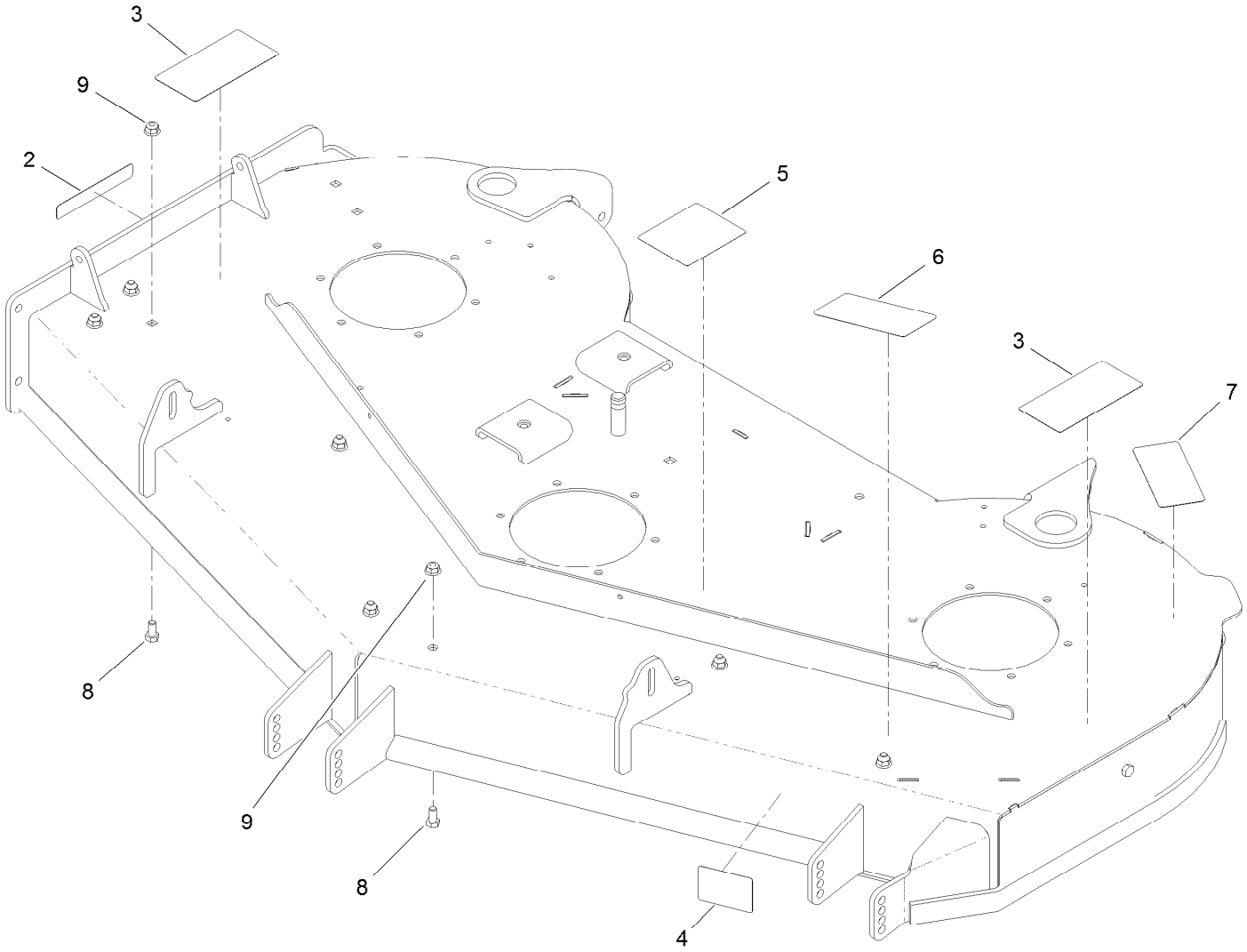

Deck Decal Assembly No. 138-6807 (continued)

Ref.	Part Number	Qty.	Description
2	130-0731	1	Decal-Danger
3	133-4604	2	Decal-Danger
4	130-0765	1	Decal-Scalp, Anti
5	117-1194	1	Decal-Routing, Belt
6	138-8828	1	Decal-Deck, 54 Inch
7	93-7818	1	Decal-Torque, Blade Bolt
8	322-2	9	Screw-HH
9	104-8300	9	Nut-HF, NI

Spindle Assembly No. 139-2357

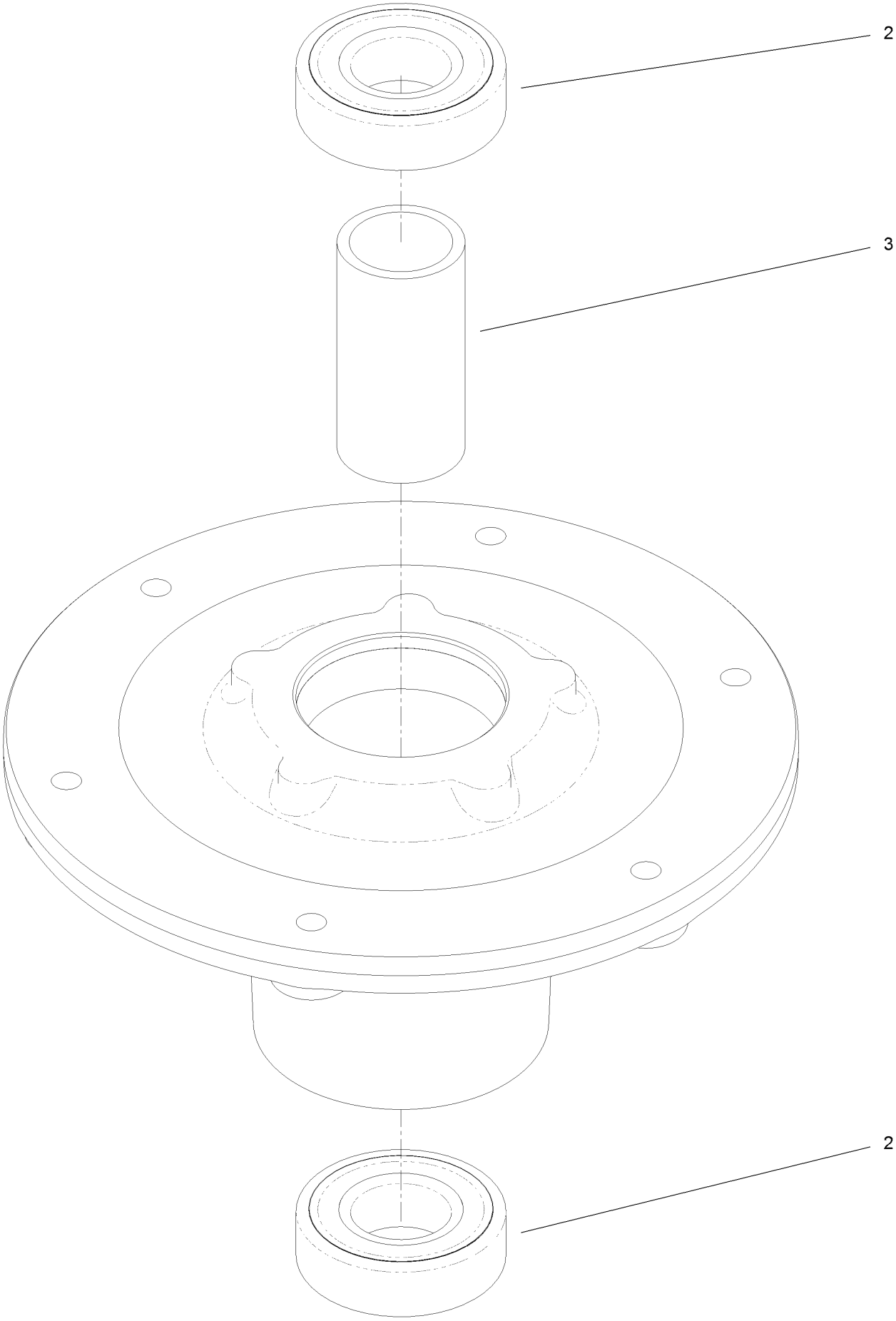

Spindle Assembly No. 139-2357 (continued)

Ref.	*Part Number*	*Qty.*	*Description*
2	116-0720	2	Bearing-Ball
3	138-7220	1	Spacer-Bearing

Transmission Assembly

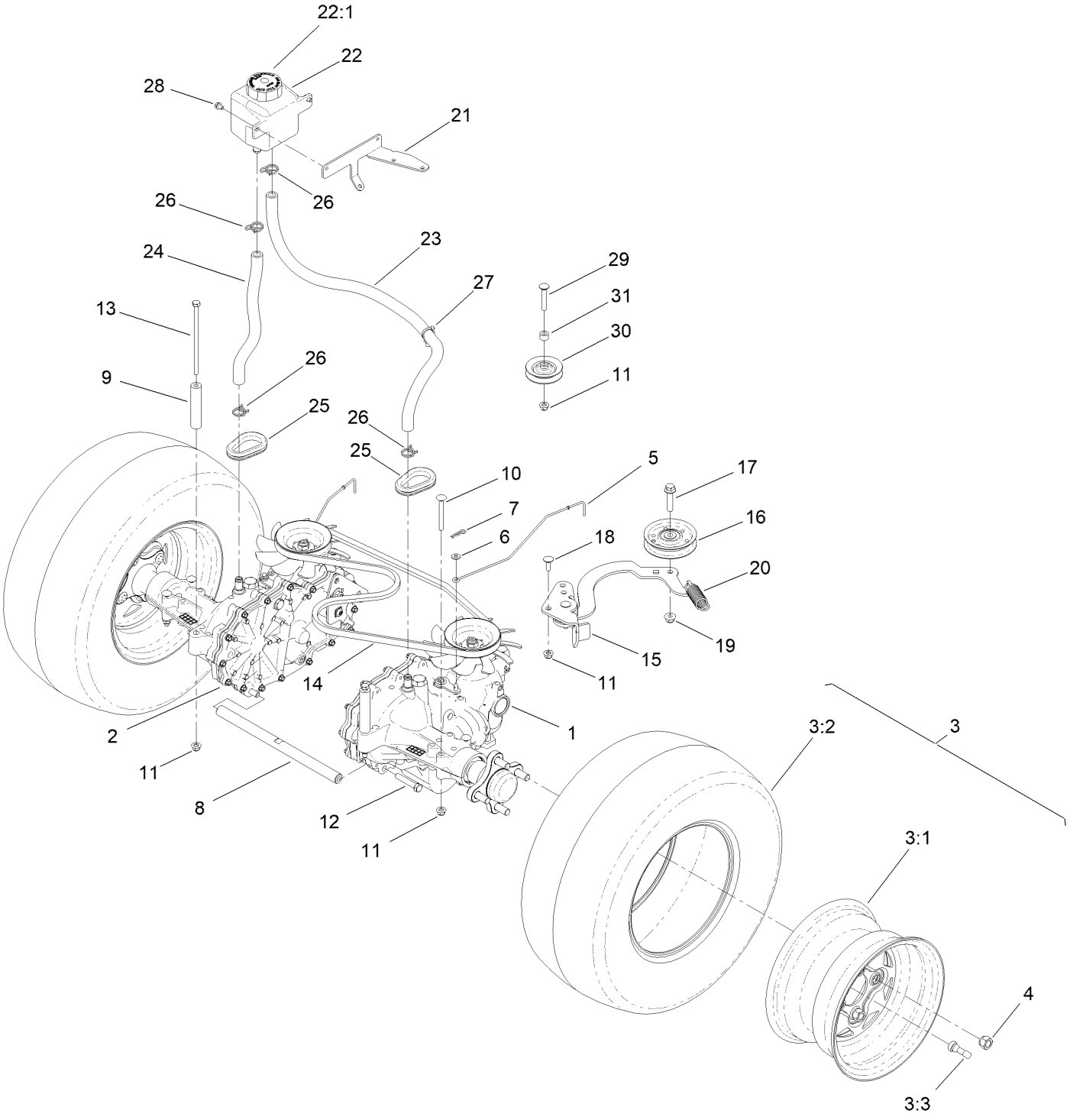

Transmission Assembly (continued)

Ref.	Part Number	Qty.	Description
1	147-0362	1	Transmission, Zt-2800 LH
2	147-0363	1	Transmission, Zt-2800 RH
3	139-5580	2	Wheel And Tire ASM
3:1	139-5581	1	Rim-10"
3:2	139-5582	1	Tire
3:3	232-27	1	Stem-Valve
4	242-50	8	Nut-Lug
5	139-5592	2	Rod-Bypass
6	3256-22	2	Washer-Flat
7	1-806003	2	Pin-Cotter
8	117-8585	1	Shaft-Cross, Hydro
9	138-5803	2	Spacer - Transmission
10	3230-9	6	Screw-CARR
11	104-8300	10	Nut-HF, NI
12	94-7972	2	Screw-HH, Patch
13	1-800286	2	Screw-HH
14	112-3799	1	Belt-V
15	139-2899	1	Idler Arm ASM
16	92-7101	1	Pulley-Idler, Flat
17	3234-19	1	Screw-HHF
18	3230-10	1	Bolt-CARR
19	104-8301	1	Nut-HF, NI
20	138-6814	1	Spring-Extension
21	139-7914-03	1	Bracket - Expansion Tank
22	109-2250	1	Tank-HYD
22:1	109-3320	1	Cap-Reservoir, HYD
23	144-3784	1	Hose-Hydro
24	115-4969	1	Hose-Overflow
25	240-12	2	Grommet-Rubber
26	117-1193	4	Clamp-Hose
27	32180-030	1	Clip-Tie
28	99-8445	2	Screw-HWH
29	3230-6	1	Bolt-CARR
30	119-8822	1	Pulley-Idler
31	98-4695	1	Spacer

LH Transmission Assembly No. 147-0362

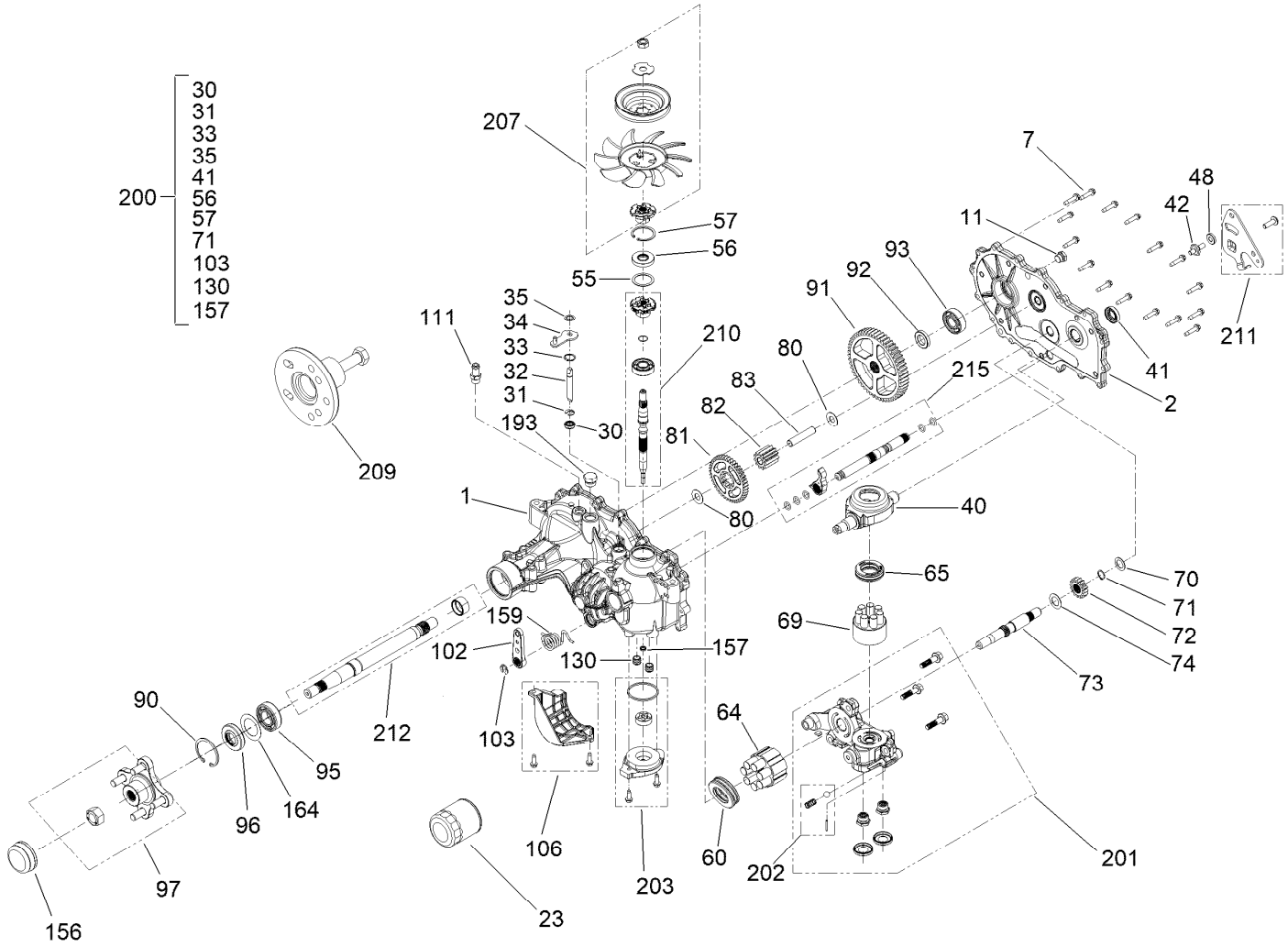

LH Transmission Assembly No. 147-0362 (continued)

Ref.	Part Number	Qty.	Description
1	140-9493	1	Kit, Main Housing RH, Charge
2	140-9494	1	Kit, Side Cover RH, Control
7	117-5359	16	Screw-HHF
11	135-1140	1	Plug-Straight
13	104-2147	1	Sealant, Silicone - Non-Flammable ●
23	109-3321	1	Element-Oil Filter, HYD
30	139-7497	1	Seal-Lip
31	106-8677	1	Ring-Retaining, External
32	114-1685	1	Rod-Bypass
33	106-8679	1	Ring-Retaining, Internal
34	107-2490	1	Arm-Bypass
35	106-8681	1	Ring-Retaining, External
40	104-5304	1	Swashplate-Trunnion
41	104-5313	1	Seal-Lip
42	104-2116	1	Stud
48	139-4073	1	Spacer
55	104-5308	1	Spacer
56	104-5310	1	Seal-Lip
57	104-5309	1	Ring-Retaining
60	112-4154	1	Bearing-Thrust
64	139-4074	1	Cylinder Block ASM Kit
65	94-6922	1	Bearing-Thrust
69	110-8561	1	Pump Block ASM
70	104-5339	1	Washer-Flat
71	104-5340	1	Ring-Retaining
72	121-5749	1	Gear-16T
73	114-1691	1	Shaft-Motor
74	104-5360	1	Washer
80	119-5541	2	*obs* Washer
81	125-0000	1	Gear-43T
82	114-1693	1	Gear-11T
83	104-5329	1	Pin-Jackshaft
90	104-2169	1	Ring-Retaining
91	114-1694	1	Gear-54T
92	120-7975	1	Spacer
93	135-1361	1	Bearing-Ball
95	130-8477	1	Bearing-Ball
96	104-2144	1	Seal
97	109-5939	1	Hub Kit
102	125-0021	1	Handle-Brake
103	131-0906	1	Ring-Retaining, EXT
106	139-7499	1	Filter Guard Kit
111	109-3278	1	Adapter-Straight
130	126-3251	2	Tube-Charge
156	115-5057	1	Cover-Nut, Axle
157	126-1930	1	Gerotor Seal Kit
159	126-2290	1	Spring, Torsion CCW
164	121-5745	1	Spacer
193	140-8343	1	Plug
200	140-8351	1	Seal Kit
201	114-8463	1	RH Center Section Kit
202	114-8464	1	Charge Relief Kit
203	114-8465	1	Charge Kit
207	135-7348	1	Fan And Pulley Kit
209	130-8482	1	Hub Puller Kit
210	139-7502	1	Input Shaft Kit
211	139-4094	1	Kit, Control Arm
212	114-8470	1	Axle Shaft Kit
215	140-9497	1	Kit, Outboard, RH Rot A / LH Rot B

● Not illustrated

RH Transmission Assembly No. 147-0363

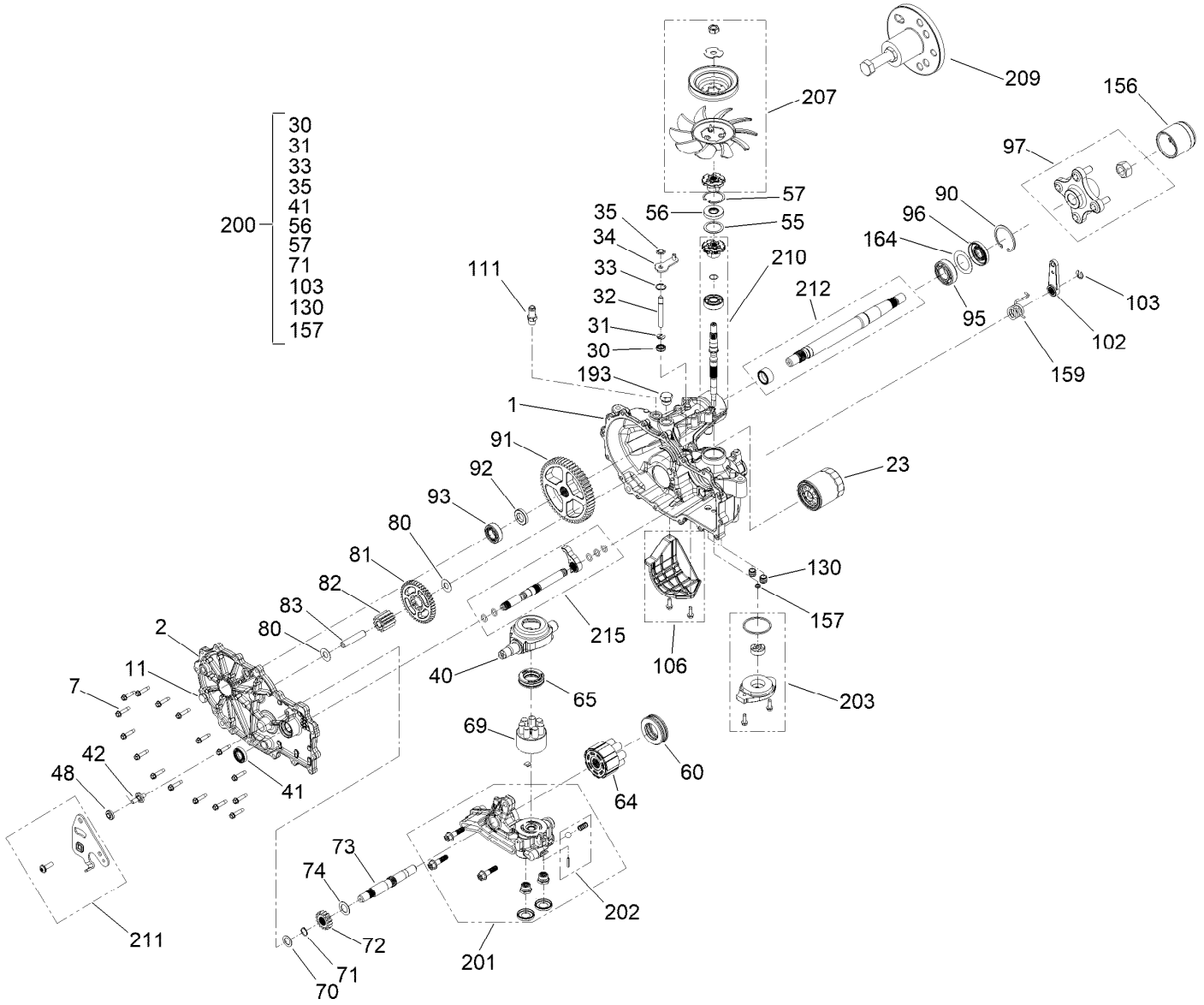

RH Transmission Assembly No. 147-0363 (continued)

Ref.	Part Number	Qty.	Description
1	140-9495	1	Kit, Main Housing LH, Charge
2	140-9496	1	Kit, Side Cover LH, Control
7	117-5359	16	Screw-HHF
11	135-1140	1	Plug-Straight
13	104-2147	1	Sealant, Silicone - Non-Flammable ●
23	109-3321	1	Element-Oil Filter, HYD
30	139-7497	1	Seal-Lip
31	106-8677	1	Ring-Retaining, External
32	114-1685	1	Rod-Bypass
33	106-8679	1	Ring-Retaining, Internal
34	112-9852	1	Arm-Bypass
35	106-8681	1	Ring-Retaining, External
40	104-5304	1	Swashplate-Trunnion
41	104-5313	1	Seal-Lip
42	104-2116	1	Stud
48	139-4073	1	Spacer
55	104-5308	1	Spacer
56	104-5310	1	Seal-Lip
57	104-5309	1	Ring-Retaining
60	112-4154	1	Bearing-Thrust
64	139-4074	1	Cylinder Block ASM Kit
65	94-6922	1	Bearing-Thrust
69	110-8561	1	Pump Block ASM
70	104-5339	1	Washer-Flat
71	104-5340	1	Ring-Retaining
72	121-5749	1	Gear-16T
73	114-1691	1	Shaft-Motor
74	104-5360	1	Washer
80	119-5541	2	*obs* Washer
81	125-0000	1	Gear-43T
82	114-1693	1	Gear-11T
83	104-5329	1	Pin-Jackshaft
90	104-2169	1	Ring-Retaining
91	114-1694	1	Gear-54T
92	120-7975	1	Spacer
93	135-1361	1	Bearing-Ball
95	120-7976	1	Bearing-Ball
96	104-2144	1	Seal
97	109-5939	1	Hub Kit
102	125-0021	1	Handle-Brake
103	131-0906	1	Ring-Retaining, EXT
106	139-7498	1	Filter Guard Kit
111	109-3278	1	Adapter-Straight
130	126-3251	2	Tube-Charge
156	115-5057	1	Cover-Nut, Axle
157	126-1930	1	Gerotor Seal Kit
159	139-4099	1	Spring, Torsion, CW
164	121-5745	1	Spacer
193	140-8343	1	Plug
200	140-8351	1	Seal Kit
201	114-8476	1	LH Center Section Kit
202	114-8464	1	Charge Relief Kit
203	114-8465	1	Charge Kit
207	135-7348	1	Fan And Pulley Kit
209	130-8482	1	Hub Puller Kit
210	139-7502	1	Input Shaft Kit
211	139-7866	1	Kit, Arm, Control
212	114-8470	1	Axle Shaft Kit
215	140-9498	1	Kit, Outboard, RH Rot B / LH Rot A

● Not illustrated

Idler Arm Assembly No. 139-2899

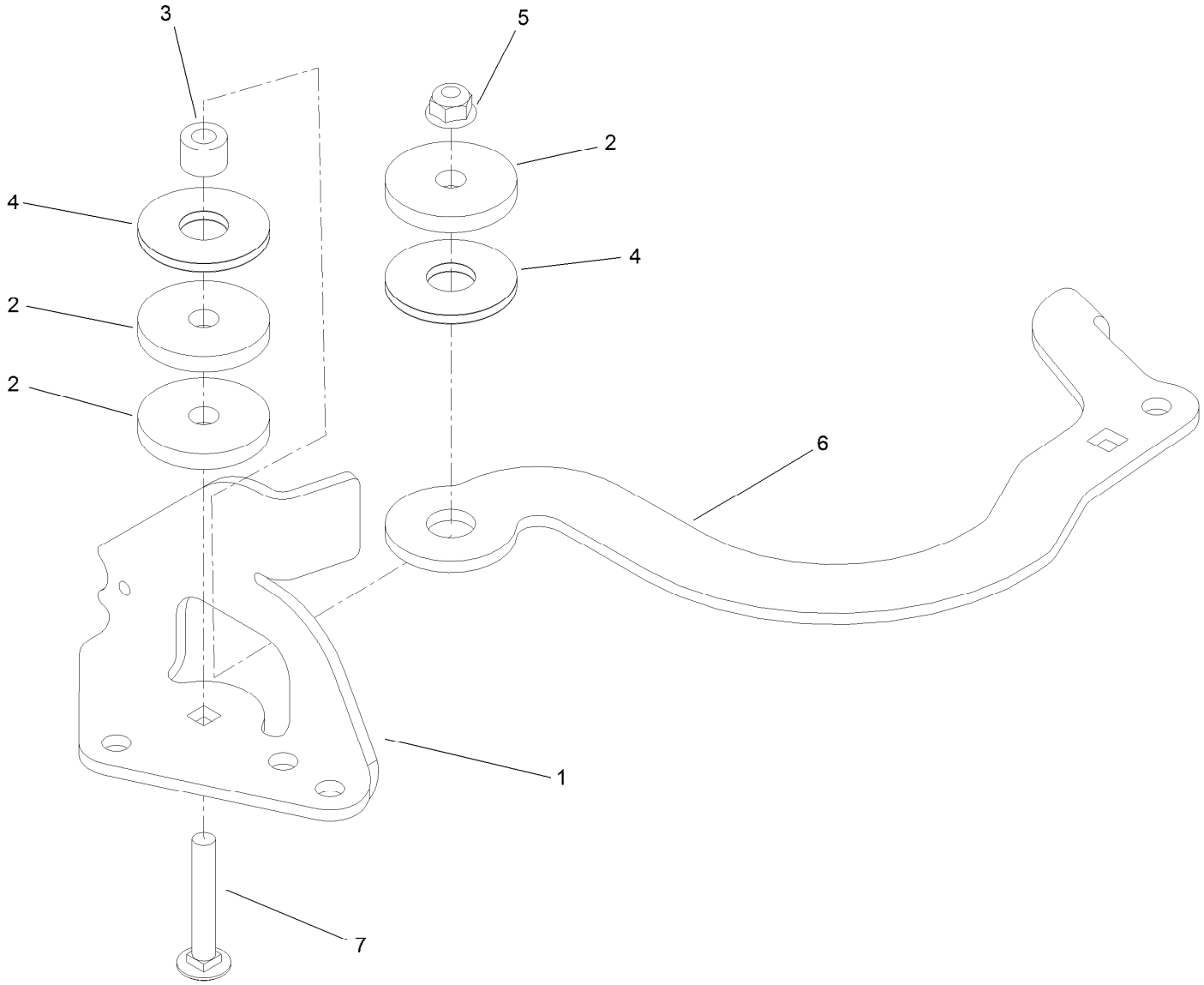

Idler Arm Assembly No. 139-2899 (continued)

Ref.	Part Number	Qty.	Description
1	138-6819	1	Mount-Idler
2	110-9981	3	Washer-Plain
3	114-8549	1	Bushing
4	114-0463	2	Washer-Friction, Composite
5	104-8300	1	Nut-HF, NI
6	139-2900	1	Arm-Idler
7	126-0699	1	Bolt-CARR

Operator Control Assembly

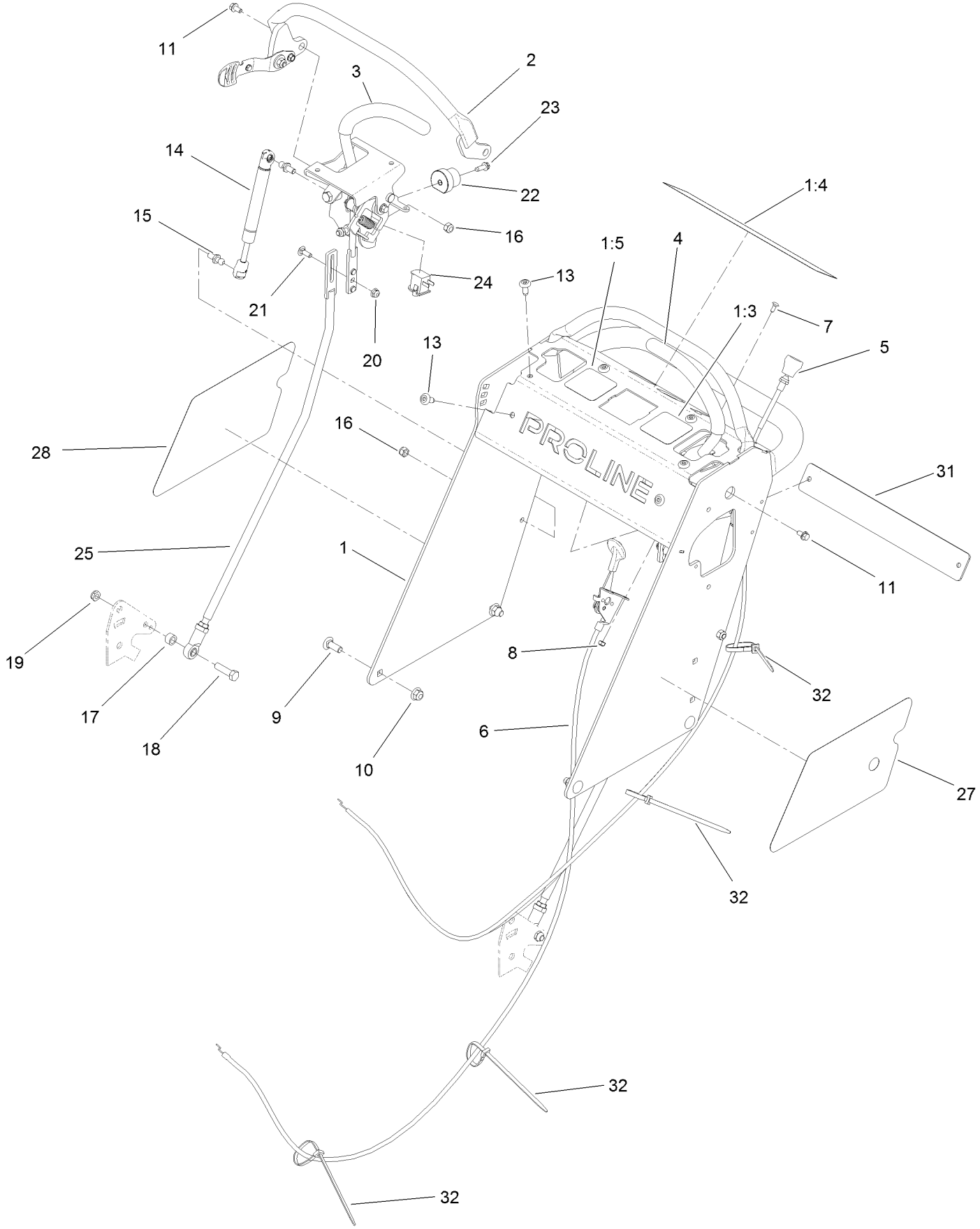

Operator Control Assembly (continued)

Ref.	Part Number	Qty.	Description
1	139-2850	1	Tower ASM
1:3	138-8816	1	Decal-OPC Control, Left
1:4	138-8818	1	Decal-Warning, Control
1:5	139-2874	1	Decal-OPC Control, Right
2	139-1475	1	Reference Bar Assembly
3	139-1532	1	Control Handle ASM, RH
4	139-1487	1	Control Handle ASM, LH
5	126-2107	1	Cable, Choke
6	109-3958	1	Control-Throttle
7	3229-34	2	Screw-CARR
8	3296-2	2	Nut-Lock, NI
9	3231-22	4	Screw-CARR
10	104-8301	4	Nut-HF, NI
11	119-1065	2	Screw-Lock,HF
13	138-9753	6	Screw
14	139-1523	2	Damper
15	103-5752	4	Stud-Ball
16	3296-72	4	Nut-Lock, NI
17	121-2608	2	Spacer
18	323-29	2	Screw-HH
19	3296-59	2	Nut-Lock, NI
20	104-7201	2	Nut-HF, NI
21	3229-1	2	Screw-CARR
22	126-1499	2	Cam
23	49-2040	2	Screw-HWHTF
24	82-2190	2	Switch-Bail
25	139-2913	2	Control Rod ASM
27	140-4253	1	Decal-Proline, LH
28	140-4254	1	Decal-Proline, RH
31	140-4251-03	1	Plate-Cover
32	3290-378	3	Tie-Cable

Reference Bar Assembly No. 139-1475

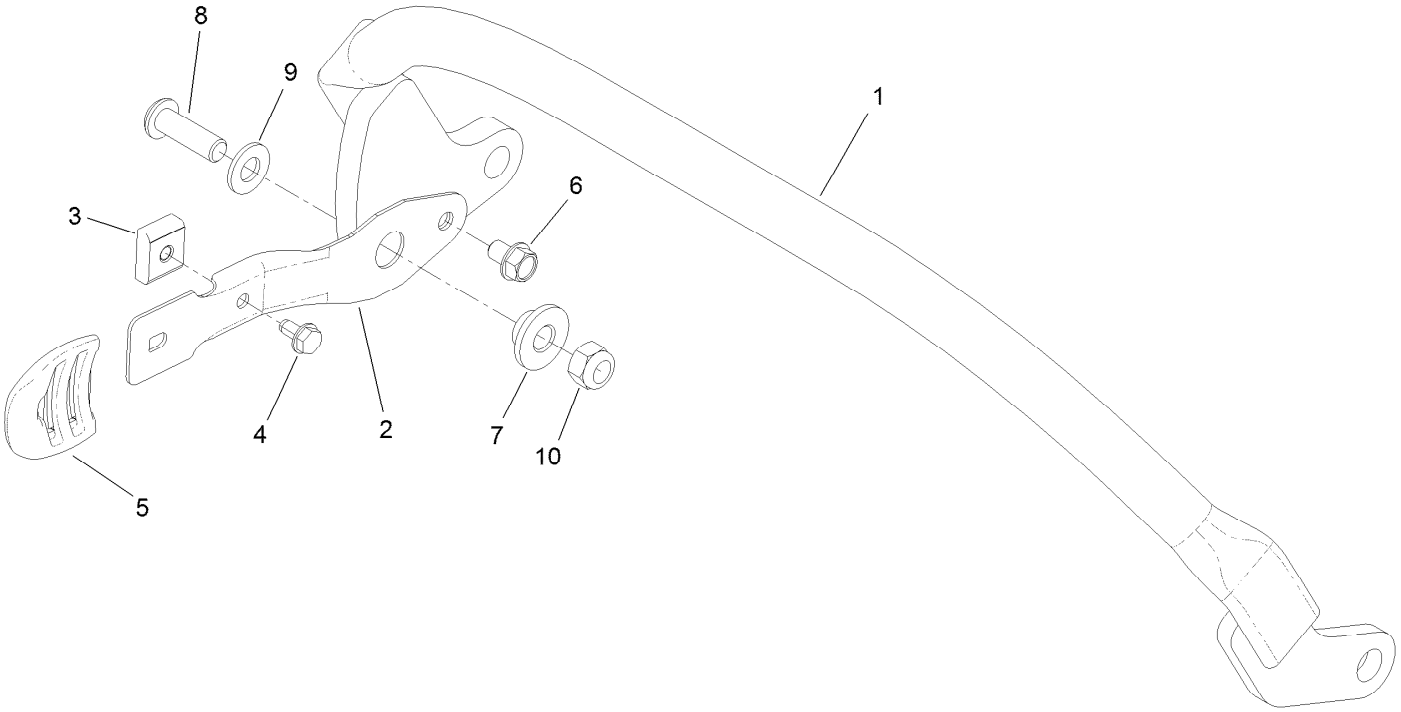

Reference Bar Assembly No. 139-1475 (continued)

Ref.	Part Number	Qty.	Description
1	139-2855-01	1	Reference Bar
2	121-1431-03	1	Arm-Spring
3	131-5377	1	Key-Arm, Spring
4	104-2065	1	Screw-HWH
5	125-1093	1	Knob-Lever, HOC
6	99-8445	1	Screw-HWH
7	117-5991	1	Washer-Stepped, Baffle
8	119-6903	1	Screw-HSBH
9	120-9683	1	Washer-Plain
10	3296-72	1	Nut-Lock, NI

RH Control Handle Assembly No. 139-1532

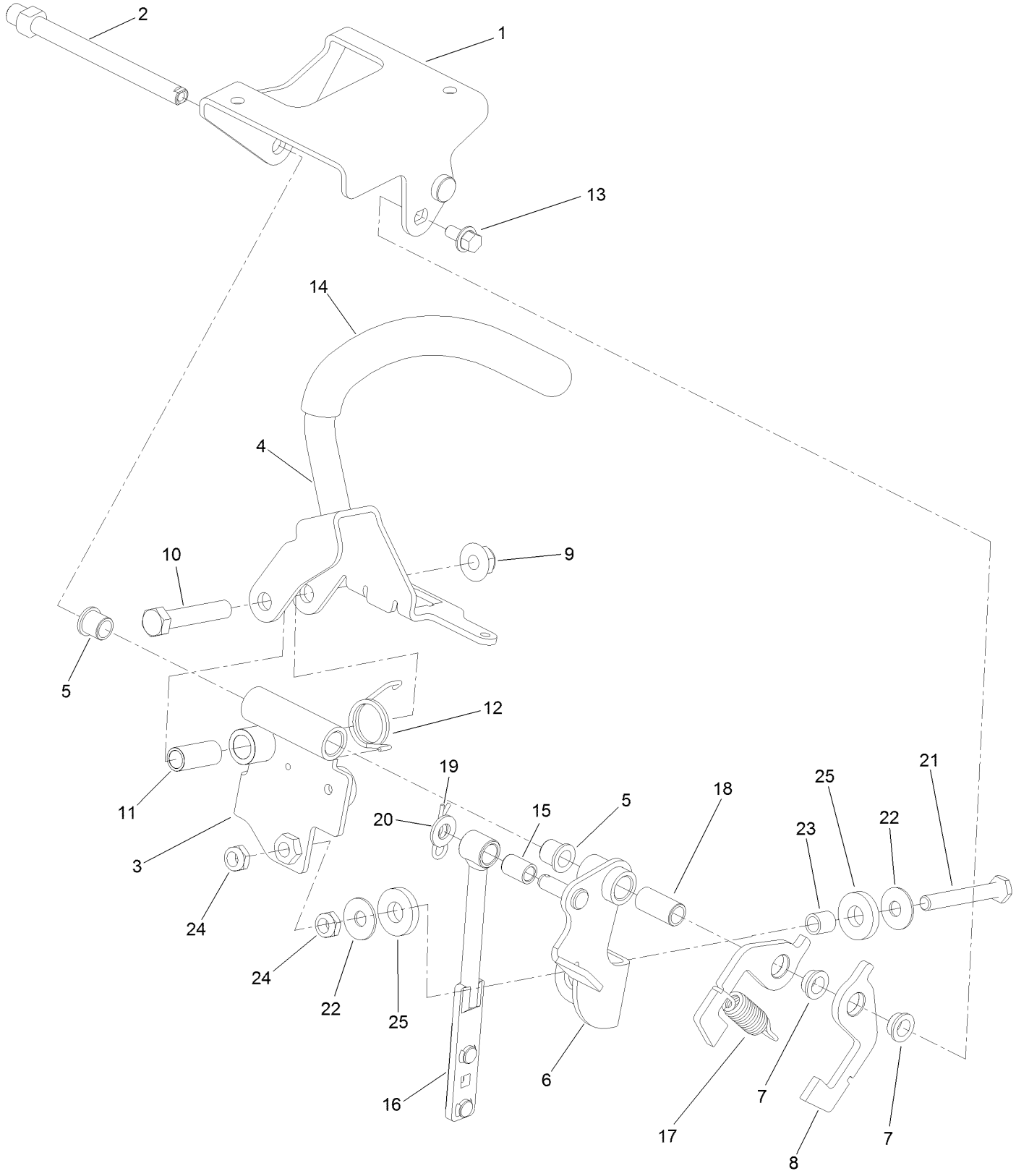

RH Control Handle Assembly No. 139-1532 (continued)

Ref.	Part Number	Qty.	Description
1	139-2852	1	Bracket-Mount, RH
2	139-1486	1	Pin-Pivot
3	139-1535	1	Motion Control ASM RH
4	139-1540	1	RH Lever ASM
5	103-9928	2	Bearing
6	139-2903	1	Motion Control ASM RH
7	139-1525	2	Bushing-Flanged Nylon
8	139-1513	2	Plate-Spring
9	104-8301	1	Nut-HF, NI
10	323-10	1	Screw-HH
11	131-3562	1	Bearing-Sleeve
12	139-1538	1	Spring-Torsion
13	3234-13	1	Screw-HHF
14	139-2863	1	Grip-Handle
15	139-2869	1	Bushing
16	139-2917	1	Control Rod Assembly
17	139-2859	1	Spring-Extension
18	139-2875	1	Bushing
19	1-806003	1	Pin-Cotter
20	3256-23	1	Washer-Plain
21	9114524	1	Bolt-TAP, HH
22	3290-456	2	Washer-Belleville
23	139-7876	1	Spacer
24	3296-47	2	Nut-Lock,NI
25	139-7883	2	Washer-Rubber

LH Control Handle Assembly No. 139-1487

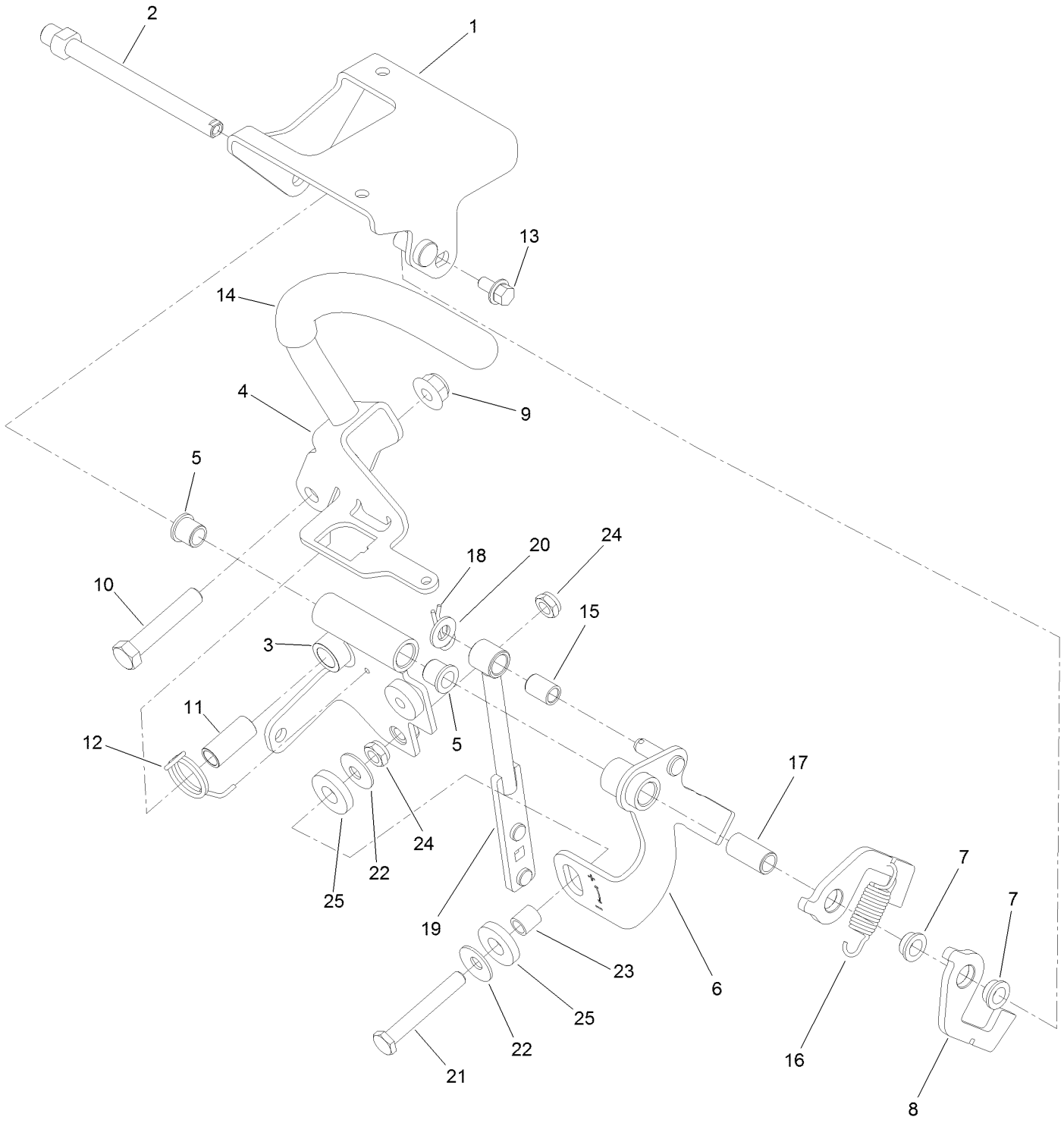

LH Control Handle Assembly No. 139-1487 (continued)

Ref.	Part Number	Qty.	Description
1	139-2851	1	Bracket-Mount, LH
2	139-1486	1	Pin-Pivot
3	139-1490	1	Motion Control ASM LH
4	139-1495	1	LH Lever ASM
5	103-9928	2	Bearing
6	139-2865	1	Motion Control ASM LH
7	139-1525	2	Bushing-Flanged Nylon
8	139-1513	2	Plate-Spring
9	104-8301	1	Nut-HF, NI
10	323-10	1	Screw-HH
11	131-3562	1	Bearing-Sleeve
12	139-1508	1	Spring-Torsion
13	3234-13	1	Screw-HHF
14	139-2863	1	Grip-Handle
15	139-2869	1	Bushing
16	139-2859	1	Spring-Extension
17	139-2875	1	Bushing
18	1-806003	1	Pin-Cotter
19	139-2917	1	Control Rod Assembly
20	3256-23	1	Washer-Plain
21	9114524	1	Bolt-TAP, HH
22	3290-456	2	Washer-Belleville
23	139-7876	1	Spacer
24	3296-47	2	Nut-Lock,NI
25	139-7883	2	Washer-Rubber

Brake Assembly

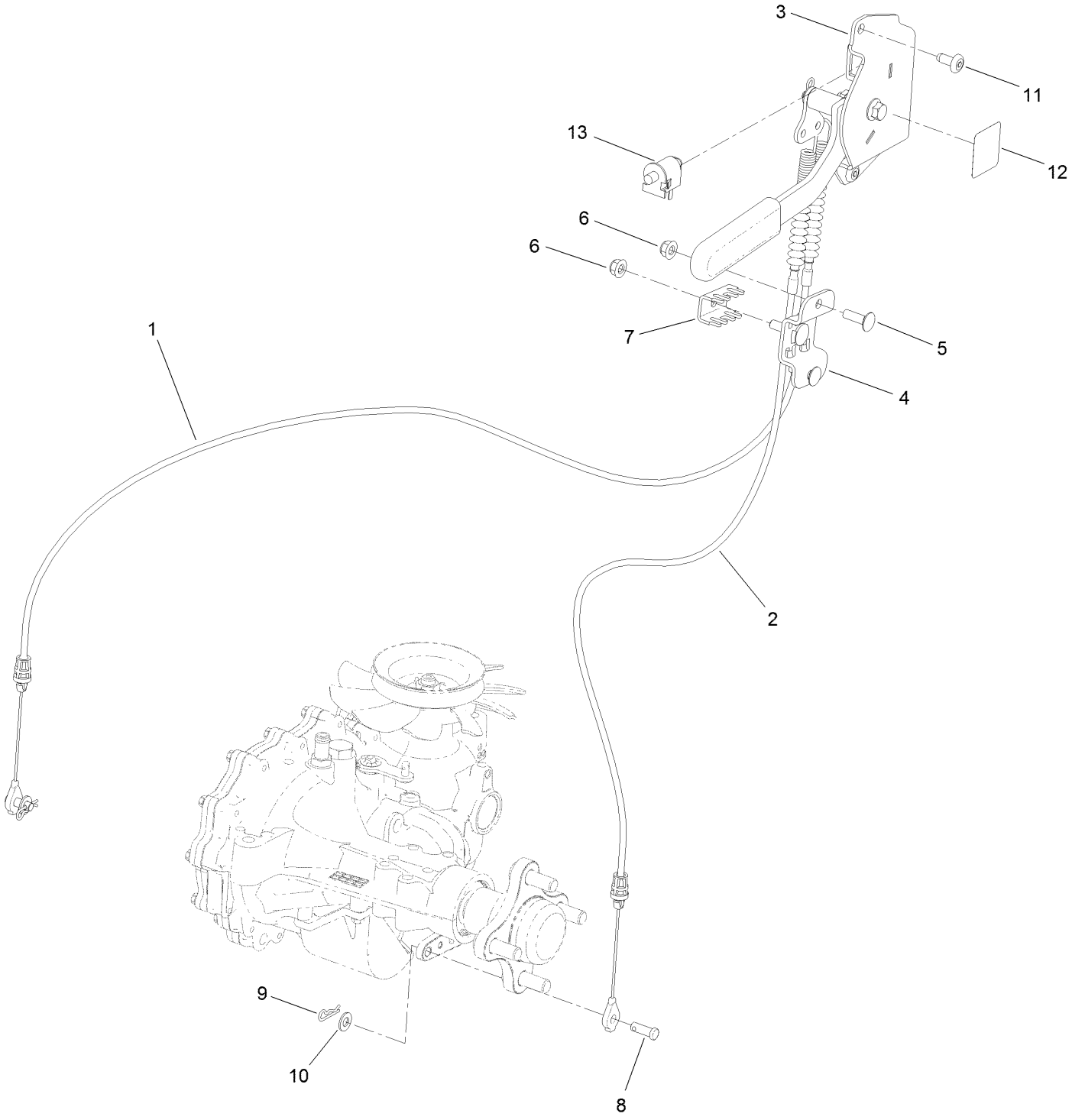

Brake Assembly (continued)

Ref.	Part Number	Qty.	Description
1	138-5841	1	Cable-Brake
2	138-5842	1	Cable-Brake
3	138-5844	1	Brake Assembly
4	132-7582	1	Mount-Cable, Brake
5	3230-28	2	Screw-CARR
6	104-8300	3	Nut-HF, NI
7	132-1187	1	Clamp-Cable
8	283-75	2	Pin-Clevis
9	1-806003	2	Pin-Cotter
10	3256-23	2	Washer-Plain
11	138-9753	2	Screw
12	116-5988	1	Decal-Park Brake, CE
13	82-2190	1	Switch-Bail

Brake Assembly No. 138-5844

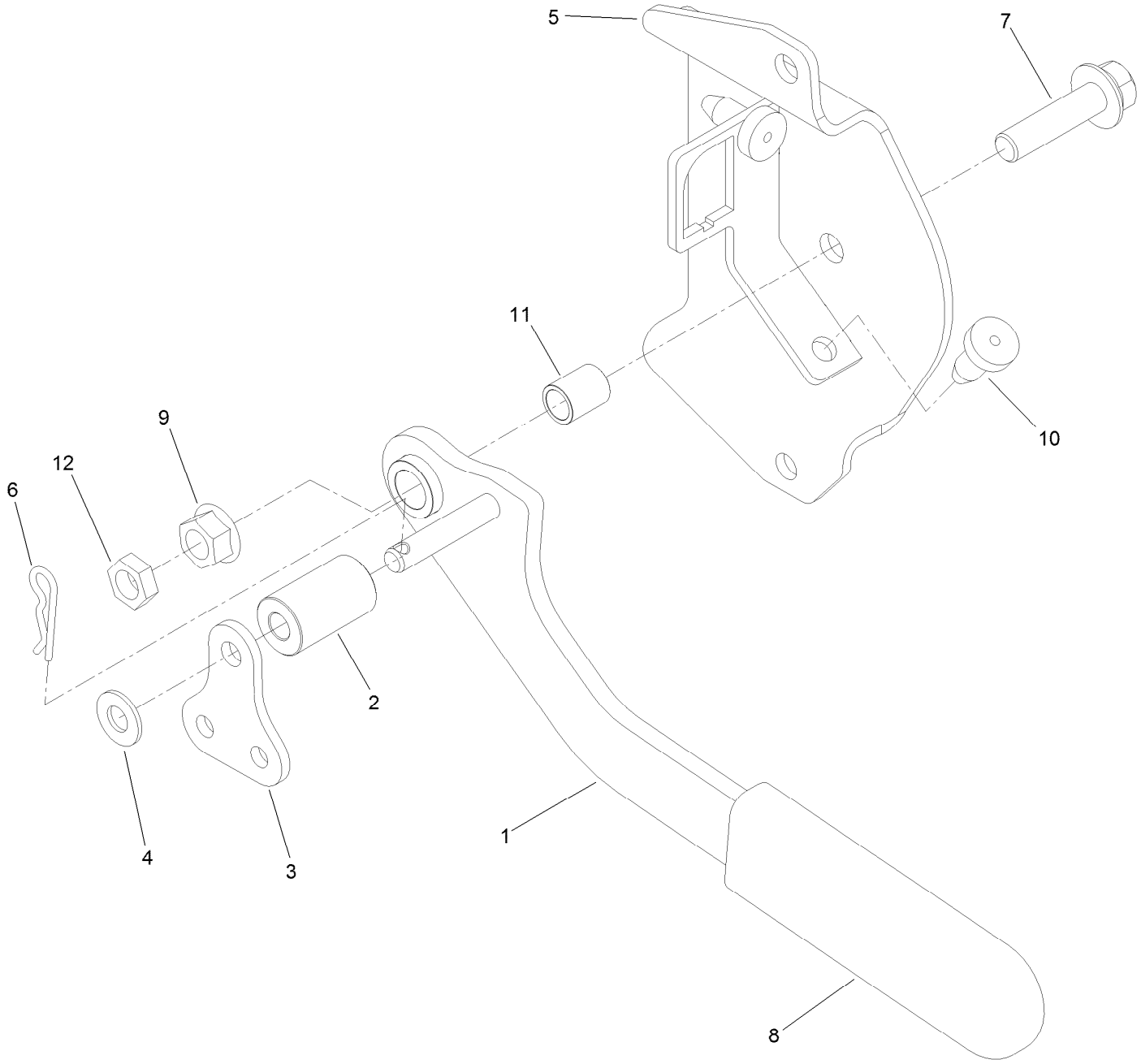

Brake Assembly No. 138-5844 (continued)

Ref.	Part Number	Qty.	Description
1	138-5845	1	Handle-Brake
2	77-3180	1	Spacer
3	138-6870	1	Yoke-Cable
4	93-6079	1	Spacer-Nylon
5	144-1515	1	Bracket ASM-Brake
6	1-806003	1	Pin-Cotter
7	114-4681	1	Screw-HHF
8	1-633268	1	Grip-Lever
9	32128-21	1	Nut-HF Lock
10	87-8460	2	Bumper-Rubber
11	139-2942	1	Bearing-Sleeve
12	3218-3	1	Nut-Jam

Deck Lift Assembly

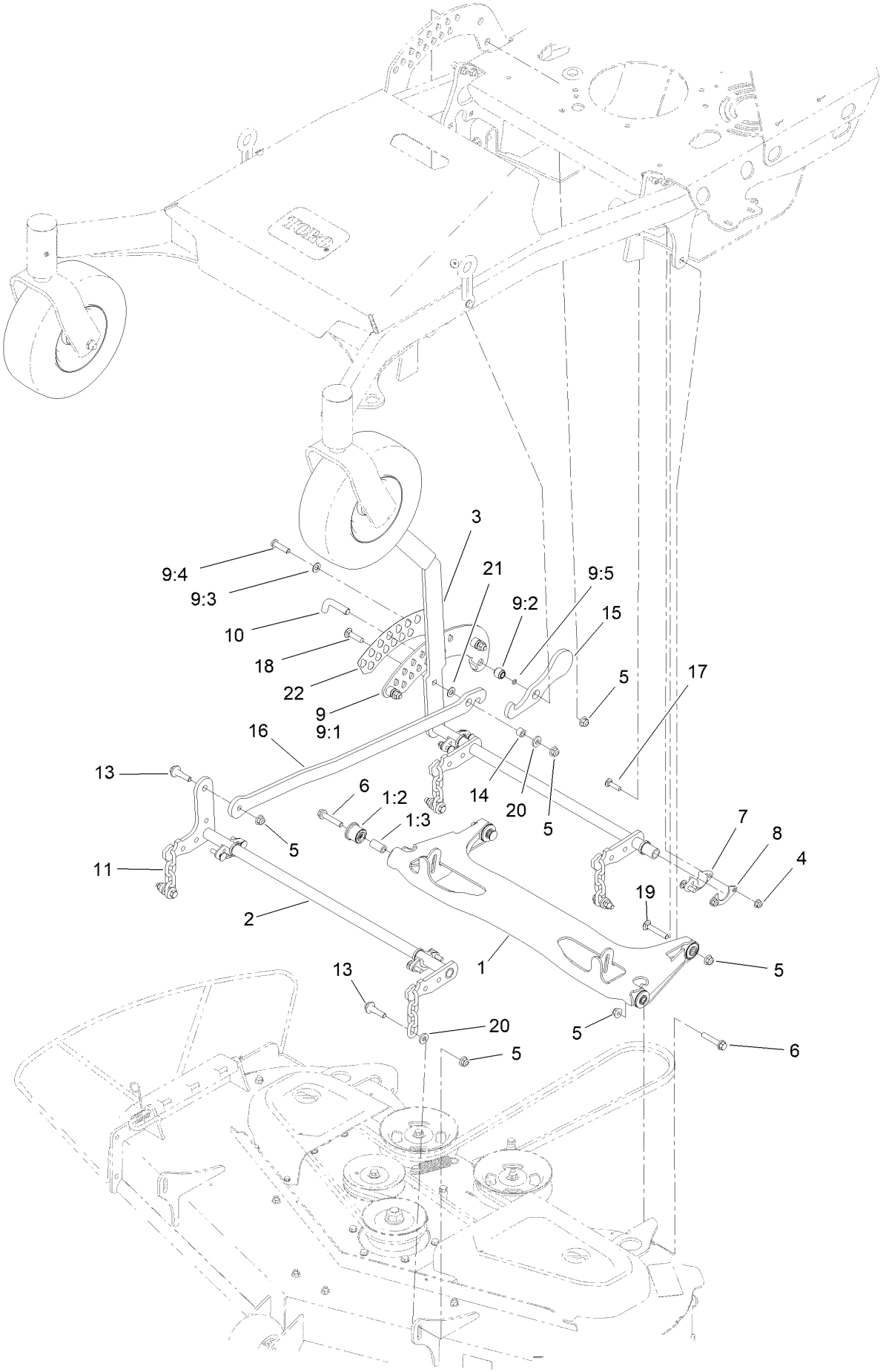

Deck Lift Assembly (continued)

Ref.	Part Number	Qty.	Description
1	138-5858	1	Deck Strut ASM
1:2	126-8360	4	Bushing-Rubber, Suspension
1:3	108-6544	4	Spacer
2	138-5861	1	Pivot ASM-Front
3	138-6869	1	Pivot ASM
4	104-8300	8	Nut-HF, NI
5	104-8301	13	Nut-HF, NI
6	108-3742	2	Screw-HHF
7	139-5872	4	Bearing-Flange
8	138-7204	4	Gusset-Deck Lift
9	138-6890	1	HOC Standoff ASM
9:1	138-1009	1	Plate - HOC
9:2	138-7201	3	Spacer-Double Step
9:3	48-9220	3	Washer-Flat
9:4	95-3857	3	Screw-HSBH
9:5	237-21	3	O-Ring
10	138-7203	1	Pin-HOC
11	138-7205	4	Chain-Decklift, 4-Link
13	130-0742	5	Bolt-Shoulder
14	115-4986	1	Spacer
15	138-5860	1	Lever-Lock
16	138-5863-03	1	Link - HOC
17	3230-3	8	Screw-CARR
18	3231-4	1	Screw-CARR
19	3231-7	2	Screw-CARR
20	138-7207	5	Spacer-Hub, Blower
21	48-9220	1	Washer-Flat
22	138-8821	1	Decal-HOC

Hood Assembly

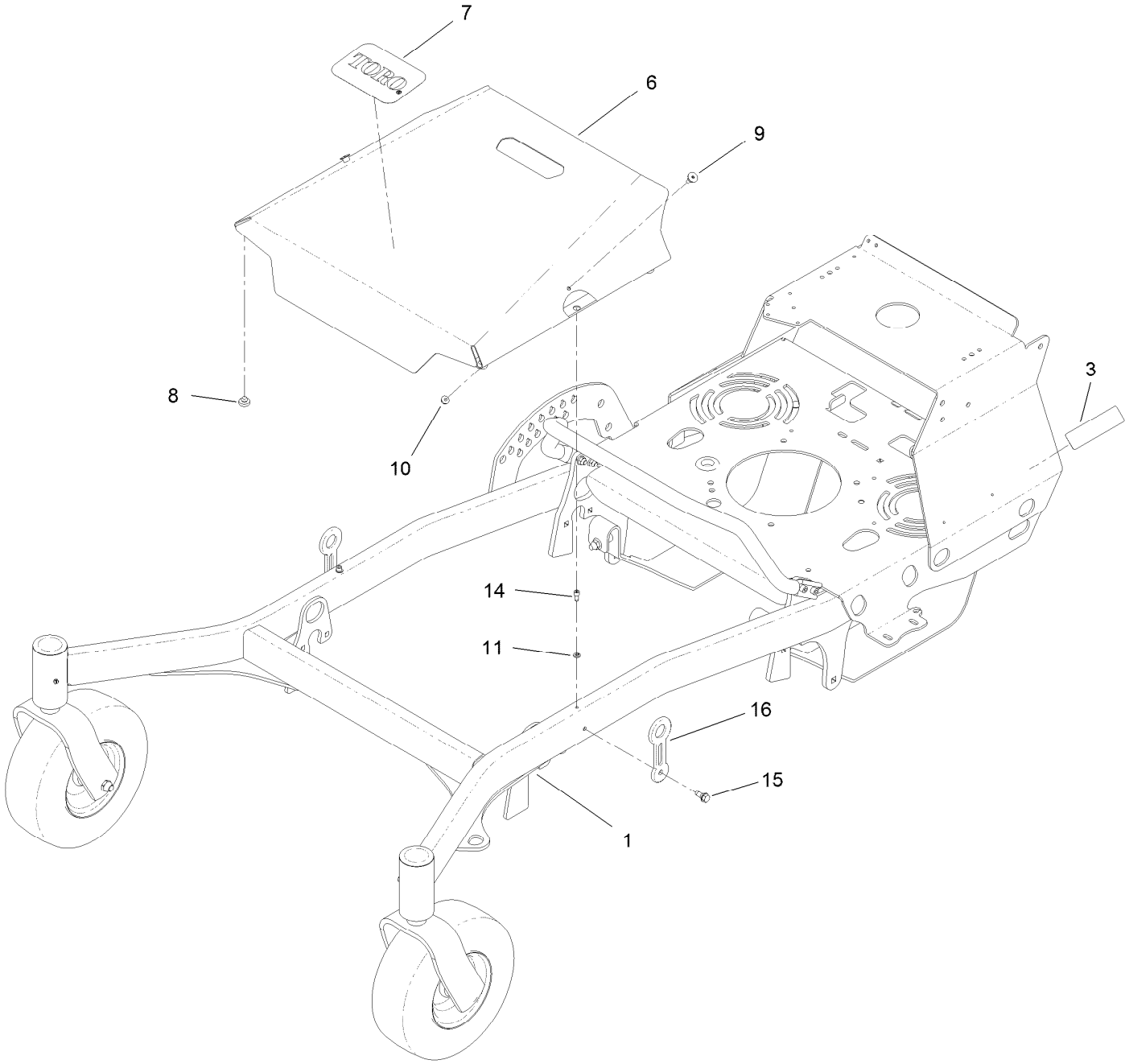

Hood Assembly (continued)

Ref.	Part Number	Qty.	Description
1		1	Frame Assembly ●
3	133-8062	1	Decal-Spark Arrestor
6	140-4331-03	1	Cover-Deck,Wide
7	99-4693	1	Decal
8	1-513658	4	Bumper
9	125-1122	2	Screw
10	104-7201	2	Nut-HF, NI
11	3253-3	2	Washer-Lock
14	65-5220	2	Screw-HSH, Thread Forming
15	126-4424	2	Screw-Shoulder
16	ST47182	2	Latch-Rubber

● Not serviced separately

Frame Assembly

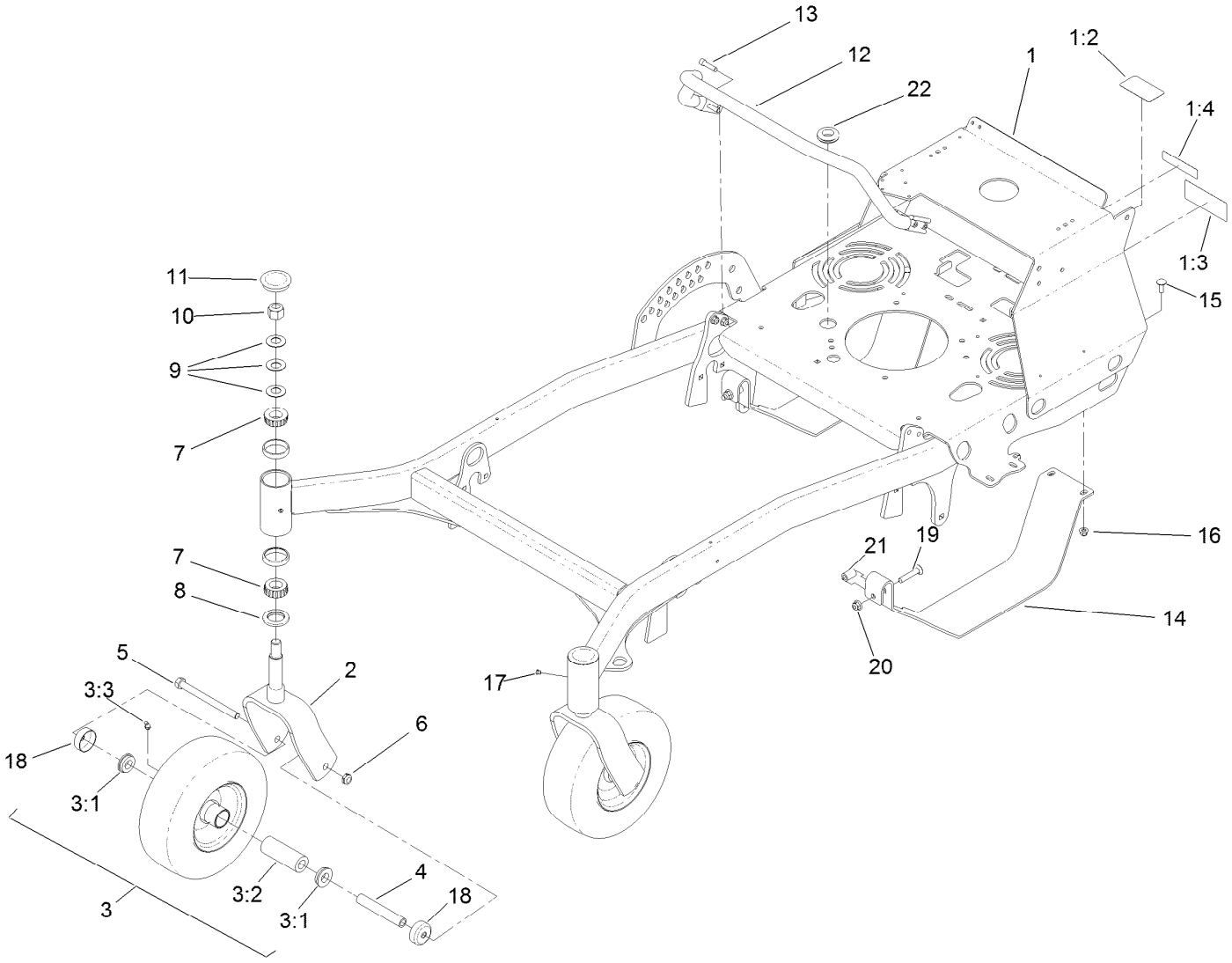

Frame Assembly (continued)

Ref.	Part Number	Qty.	Description
1	140-1865	1	Frame ASM
1:2	138-8820	1	Decal - Bypass
1:3	126-1400	1	Decal-Warning, Sulky
1:4	98-1977	1	Decal-Warning
2	121-7988-01	2	Fork-Caster
3	140-4286	2	Wheel And Tire ASM
3:1	1-513810	2	Bushing
3:2	1-513809	1	Bearing
3:3	161-9925	1	Fitting-Grease, 45
4	1-513547	2	Spacer
5	325-20	2	Screw-HH
6	3296-45	2	Nut-Hex
7	1-543509	4	Bearing-Roller, Tapered
8	1-543511	2	Seal-Grease
9	1-633508	6	Washer-Bellville
10	3296-51	2	Nut-Lock, NI
11	103-4882	2	Cap-Grease
12	138-5881-03	1	Tube, Muffler Guard
13	3274-18	4	Screw-HSH
14	139-2938-03	2	Guard-Transmission
15	3230-10	4	Bolt-CARR
16	104-8300	8	Nut-HF, NI
17	1-811010	2	Plug
18	133-7088	4	Guard-Seal
19	117-9971	2	Bolt-Carriage
20	104-8301	2	Nut-HF, NI
21	114-2754	2	Spacer
22	1-543286	1	Grommet

Engine Assembly

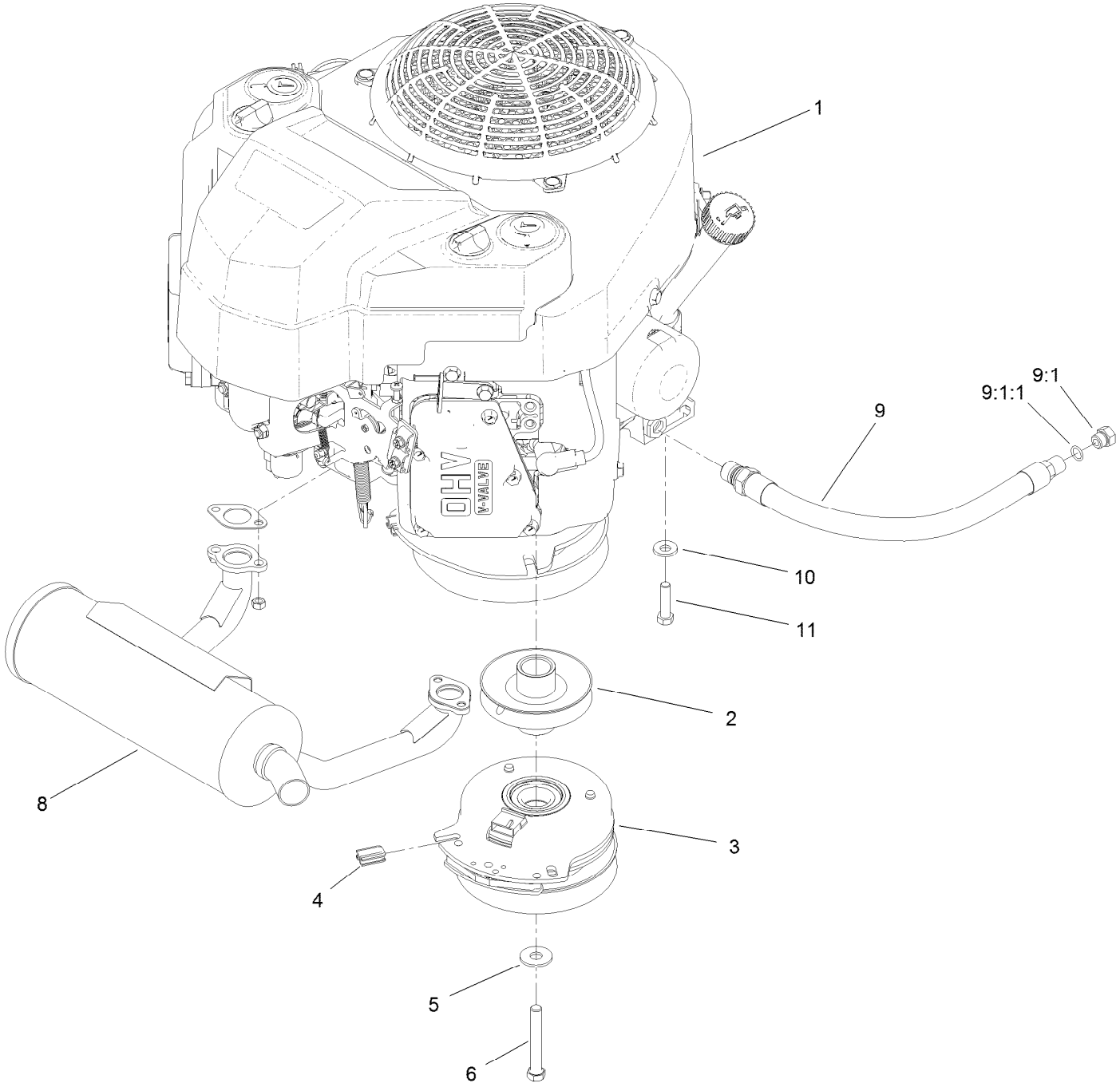

Engine Assembly (continued)

Ref.	Part Number	Qty.	Description
1		1	Engine-Kawasaki, Fs600V ■▲
2	139-2879	1	Pulley
3	127-3410	1	Clutch-PTO
4	120-2217	1	Isolator-Clutch
5	94-2701	1	Washer-Hardened
6	126-7198	1	Screw-HH W/Loctite
8	116-3735	1	Muffler-Horizontal
9	116-5052	1	Asm-Oil Drain Hose W/Plug
9:1	353-508	1	Plug-HH ●
9:1:1	237-42	1	O-Ring
10	98-5975	3	Washer-Belleville
11	323-8	4	Screw-HH

● Torque to 20-24 ft-lb
▲ Obtain parts from www.kawpower.com
■ Not serviced separately

Fuel System Assembly

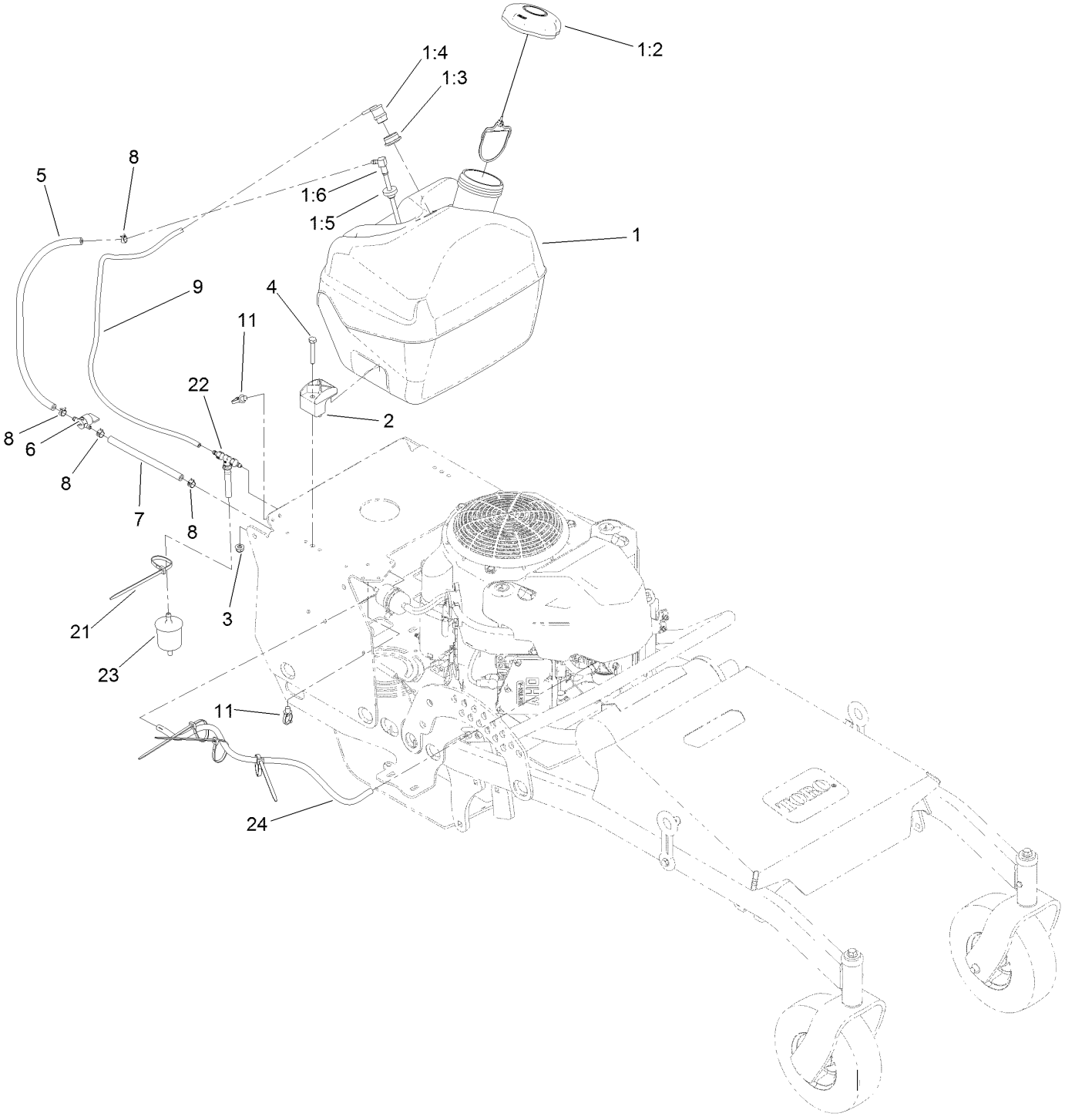

Fuel System Assembly (continued)

Ref.	Part Number	Qty.	Description
1	140-4343	1	Fuel Tank ASM, 5 Gal
1:2	137-4119	1	Cap-Fuel, Ratcheting
1:3	114-0284	1	Grommet
1:4	119-3547	1	Valve-Vent, Fuel
1:5	46-6560	1	Bushing
1:6	109-9364	1	Fitting-Fuel (W/Line And Screen)
2	107-4543	2	Clamp
3	104-8300	2	Nut-HF, NI
4	322-10	2	Screw-HH
5	114-4428	1	Hose-Fuel
6	1-603770	1	Valve-Fuel
7	110-1876	1	Hose-Fuel
8	2412-98	4	Clamp-Hose
9	138-8837	1	Hose, Emissions
11	32180-030	2	Clip-Tie
21	3290-378	4	Tie-Cable
22	116-5464	1	Tee And Check
23	120-2235	1	Filter-Fuel
24	119-6074	1	Hose-Fuel

Electrical Harness and Battery Assembly

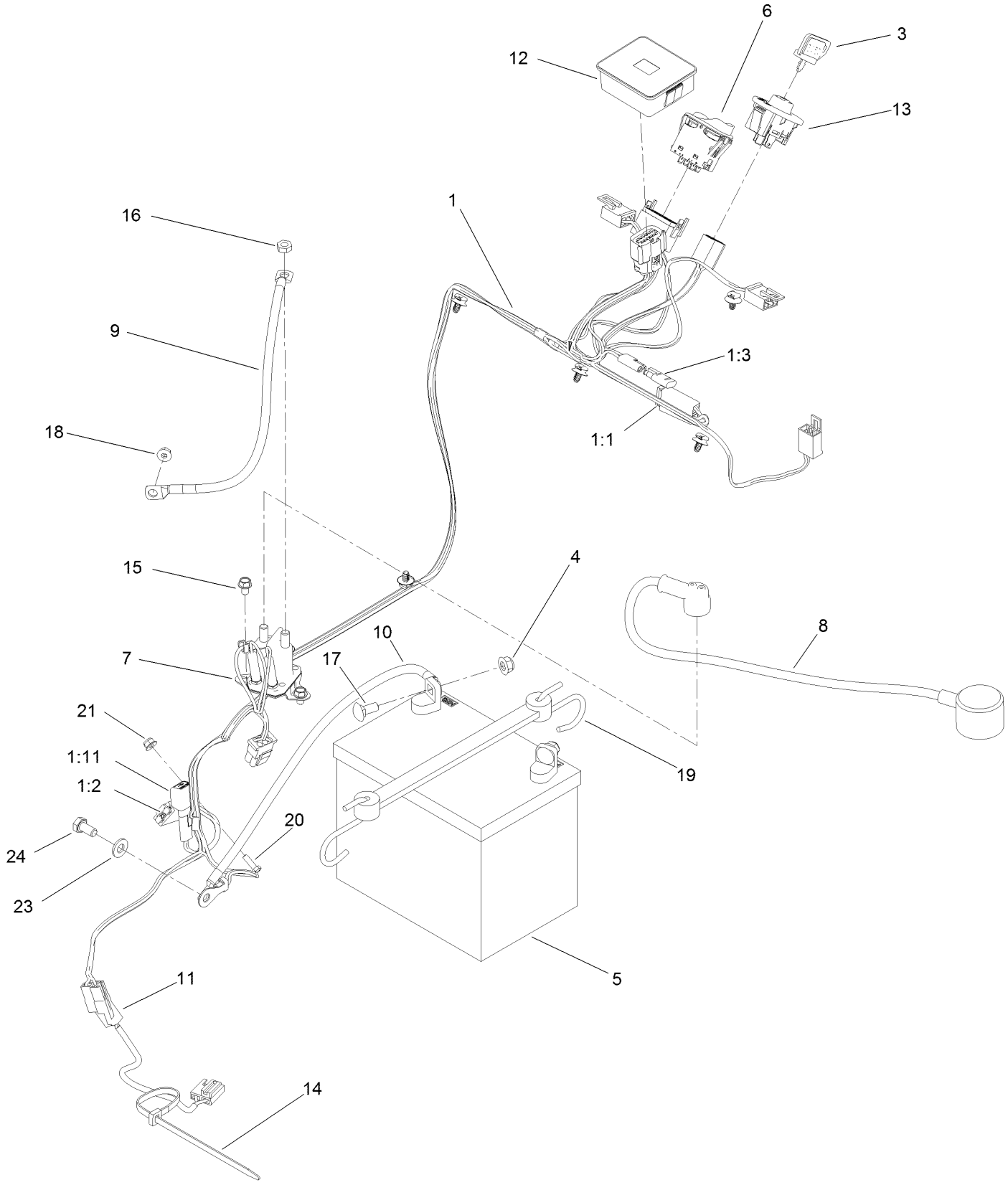

Electrical Harness and Battery Assembly (continued)

Ref.	Part Number	Qty.	Description
1	138-8840	1	Harness-Wire, Wasp
1:1	109355	1	Fuse-Blade, 15 Amp
1:2	109102	1	Fuse-Blade, 25 Amp
1:3	116-0053	1	Cap-Plug
1:11	100-4918	1	Diode
3	63-8360	1	Key-Ignition
4	104-8300	2	Nut-HF, NI
5	105-1692	1	Battery- Dry, 12V, 230 CCA
6	139-6367	1	Switch-Rocker, (On)-On-Off
7	117-1197	1	Solenoid
8	115-3864	1	Cable-Battery, Positive
9	139-6354	1	Cable-Battery, Pos ASM
10	139-6358	1	Cable-Battery, Neg ASM
11	126-0624	1	Harness-Clutch Pigtail
12	139-5561	1	Module, Hour Meter
13	137-4100	1	Switch-Ignition
14	3290-378	1	Tie-Cable
15	99-8445	2	Screw-HWH
16	3220-2	1	Nut-Hex Jam
17	3230-1	2	Bolt-CARR
18	32128-32	1	Nut-HHF
19	104-2466	1	Holddown-Battery
20	3290-134	1	Screw
21	120-4578	1	Nut-HF
23	33094-00	1	Washer-Plain
24	33114-016	1	Screw-HH

Attachments and Accessories

For 44427 — Proline Commercial Walk-Behind Mower with 54in Floating Cutting Unit

Product Name	Model/Part
Hypr-Oil 500 (quart)	114-4713
Hypr-Oil 500 (gallon)	114-4714
Hypr-Oil 500-5 (5 gallon)	114-4715
Toro Premium Fuel Treatment 12oz Bottle	131-6572
Electric Accessory Port	133-1438
Weight Kit	138-6866
Blade - Mulch, 18.75 In	138-8885-03
Blade - Hi Flow, 18.75 In	138-8889-03
Blade - High Lift, 18.75 In	138-8892-03
HOC Brackets Kit	139-4063
Light Kit	139-5595
Soft Side Bagger	139-7860
54in Recycler Kit	140-1915
Rubber Deflector Kit	140-4300
Leaf Bagging Enhancement Kit	140-5122
6 Pack-Blade, 18.75 Recycler	140-7731
6 Pack-Blade, 18.75 Hi-flow	140-7735
6 Pack-blade, 18.75 Hi-lift	140-7739
10W30 4-Cycle Engine Oil (32oz Bottle)	38280
Toro 4-Cycle SAE 30 Oil (32oz Bottle)	38903
Two-Wheel Sulky, Proline Midsize	44401
Spark Arrestor	98-9099

Notes:



Count on it.