Form No. 3351–545

Steel Roller

Greensmaster® DPA Reel Mowers

Model No. 04628

Installation Instructions

1. Remove plow bolt, washer and flange nut securing one of the HOC arms to cutting unit sideplate.
2. Loosen roller mounting screws in HOC arms.
3. Slide roller shaft into HOC arm on opposite end of cutting unit.
4. Slide HOC arm onto roller shaft.
5. Loosely secure the roller to the cutting unit with the HOC arm and fasteners previously removed.
6. Center roller between HOC arms.
7. Tighten roller mounting screws
8. Adjust to desired height of cut and tighten HOC arm mounting fasteners.

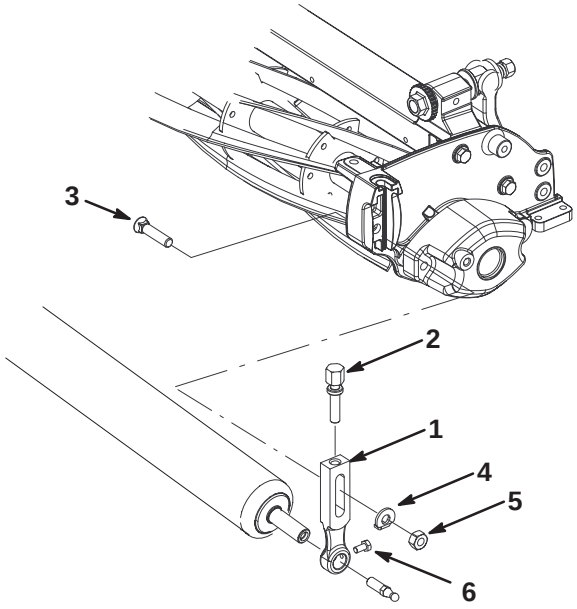

Figure 1

1. HOC arm
2. Adjusting screw
3. Plow bolt
4. Washer
5. Flange nut
6. Screw

© 2004 by The Toro Company
8111 Lyndale Avenue South
Bloomington, MN 55420-1196

All Rights Reserved
Printed in the USA