Form No. 3351-557

8 and 11 Blade DPA Reel Mowers

Greensmaster© 3000 Series

Model No. 04610—230000001 and Up
Model No. 04611—230000001 and Up

Setup Instructions

Attention!

You must perform the following procedures on the designated traction units before you install the cutting units.

Greensmaster 3050 Serial No. 230001501 & Prior

Greensmaster 3100 Serial No. 220001501 & Prior

Greensmaster 3150 Serial No. 230001000 & Prior

Mounting the Pull Arm Bumpers

Order (6) Bumpers, Part No. 94-4548 and (6) Washer Head Self Tapping Screws, Part No. 32144-44 from your local Toro Distributor. Bumper may have already been mounted to pull frame.

1. Using the dimensions shown in Figure 1, locate, mark, and drill two .221 in. diameter holes in the underside of each pull frame cross tube.

Note: Holes may already be present in the cross tubes.

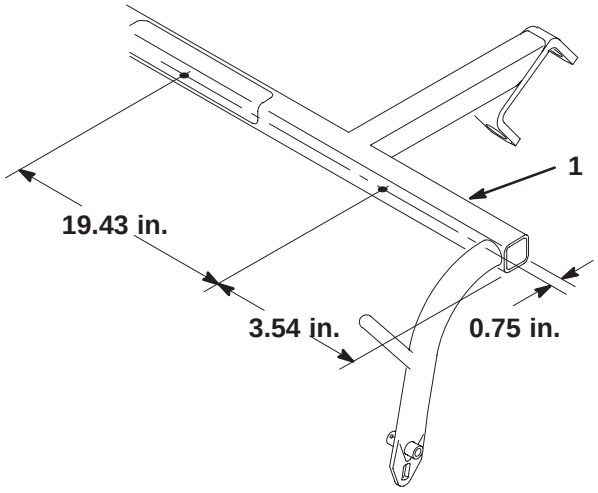

Figure 1

1. Pull frame cross tube

2. Mount the 2 recessed bumpers to the underside of each pull frame cross tube with 2 washer head self tapping screws (1/4 x 3/4 in.) (Fig. 2).

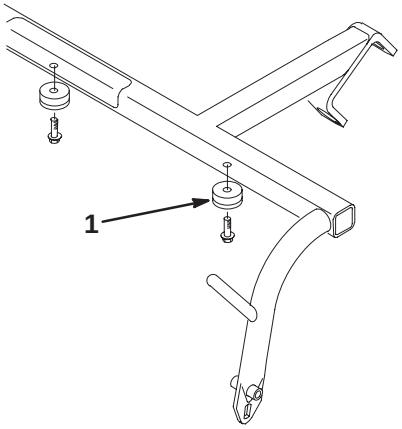

Figure 2

1. Recessed bumper

Modifying the Baskets

1. Locate and mark cut-off lines on each side of basket, as shown in Figure 3.

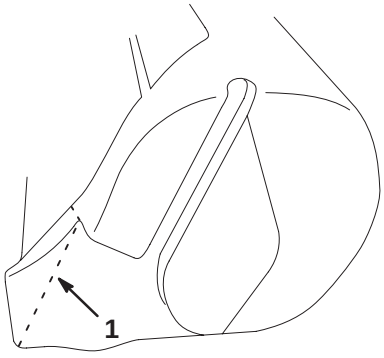

Figure 3

1. Cut-off line

© 2004—The Toro Company
8111 Lyndale Ave., Bloomington, MN 55420, USA

Printed in the USA
All Rights Reserved

Original Instructions (EN)
Register your product at www.Toro.com

2. Using a sharp knife or similar cutting tool, cut off material at marks.

3. Repeat procedure on all baskets.

Greensmaster 3250 Serial No. 230001500 & Prior

Modifying the Baskets

1. Using dimensions shown in Figure 4, locate and mark cut–off lines on each side of basket.

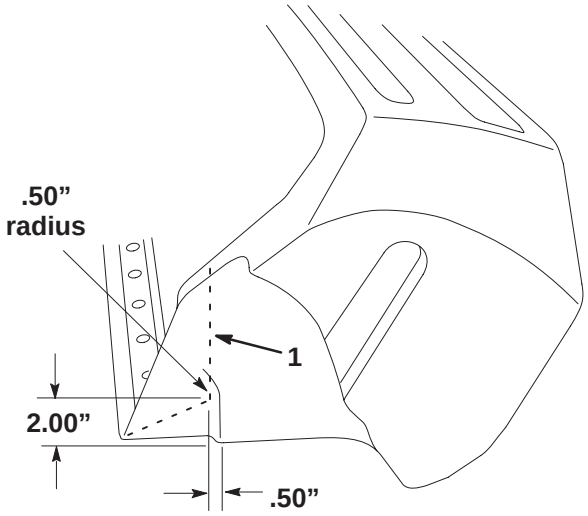

Figure 4

1. Cut–off line

2. Using a sharp knife or similar cutting tool, cut off material at marks.

   Important Do not make a sharp corner; cut to form a radius of approximately 1/2 in.

3. Repeat procedure on all baskets.

Replacing the Pull Arm Extension

Order (6) Pull Arm Extensions, Part No. 99-4270 from your local Toro Distributor.

1. Lower cutting units to the ground.

2. Loosen jam nuts and remove existing pull arm extension from pull arms and ball joint receivers on all carrier frames (Fig. 5).

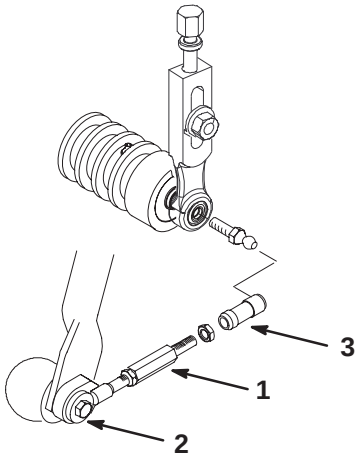

Figure 5

1. Pull link extension
2. Pull arm
3. Ball joint receiver

3. Install new longer pull arm extensions to pull arms and ball joint receivers (Fig. 6).

4. Adjust pull arm extensions to attain dimension shown in Figure 6. Tighten jam nuts.

5. Mount the basket onto the carrier frame.

6. Adjust the pull links until there is 1/4 to 3/8 in. (6 to 9 mm) clearance between the lip of the basket and the reel blades. Make sure the basket lips are equidistant from the reel blades all the way across the reel blades.

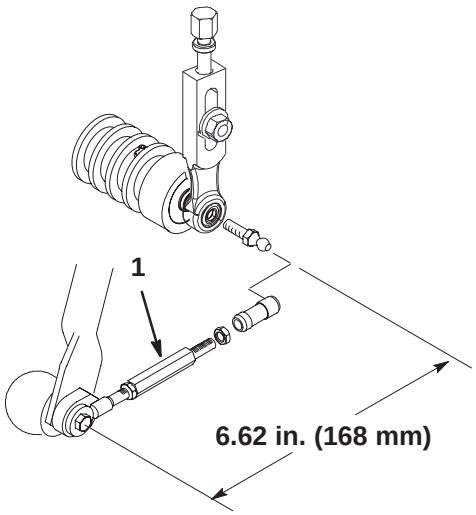

Figure 6

1. Pull link extension