Form No. 3351–618

Four Wheel Drive Kit

Groundsmaster 580D

Model No. 30601–240000001 and Up

Installation Instructions

⚠ WARNING

POTENTIAL HAZARD
- **Traction Unit rolls over.**

WHAT CAN HAPPEN
- **Bodily injury could occur.**

HOW TO AVOID THE HAZARD
- **Make sure ROPS is installed on all Groundsmaster 580–D Traction Units equipped with a Four Wheel Drive Kit.**

Mount the Wheel Motors

1. Disconnect/remove the rear tires, tie rod assembly and steering cylinder from the wheel spindles. Remove the wheel spindles from the axle (Fig. 1).

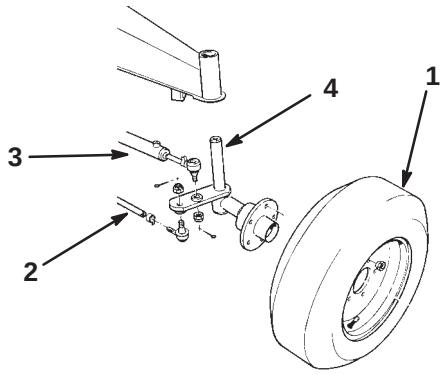

Figure 1

1. Rear tire
2. Tire rod
3. Steering cylinder
4. Wheel spindle

2. Slide a thrust washer over the shaft on each of the wheel motor housings (Fig. 2).

3. Slide the left and right wheel motor housings onto the axle and secure with retaining rings, spindle caps, and 3/8–16 x 3/4" lg. flange bolts (Fig. 2).

4. Reinstall the steering cylinders. Adjust the ball joint on the steering cylinder so that the steering arms contact the stops on the axle in either direction (Fig. 2).

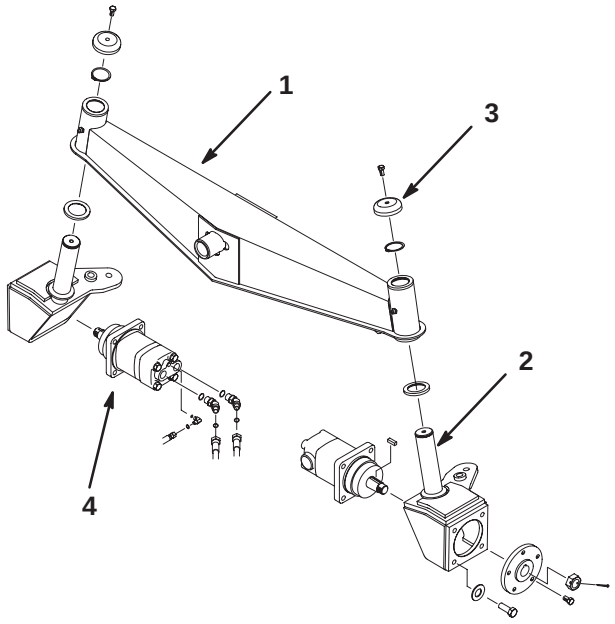

Figure 2

1. Four wheel drive axle
2. Wheel motor housing
3. Spindle caps
4. Wheel motor

5. Reinstall the tie rod and tires. Torque the wheel studs to 50 ft–lbs.

6. Adjust the tie rod so that the toe–in (measure at the front of the tires) is within 1/8 of an inch when the wheels are in the straight ahead position. The measurement must be taken at the same height from the ground on both the front and rear (Fig. 3). After adjusting, the slots in the tie rod and the clamps should face downwards.

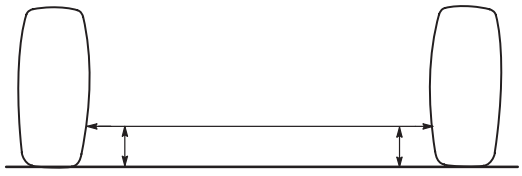

m–3398

Figure 3

© 2004 by The Toro Company
8111 Lyndale Avenue South
Bloomington, MN 55420-1196

All Rights Reserved
Printed in the USA

Install the Hydraulic Lines

1. Remove the hydraulic tubes from the rear bulkhead assembly (Fig. 4).

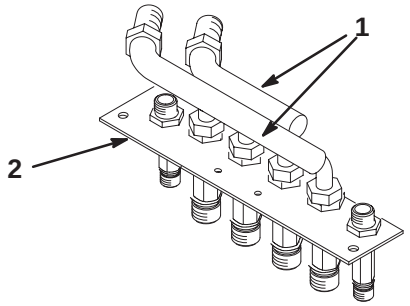

Figure 4

1. Hydraulic tubes
2. Bulkhead assembly

2. Secure the rear bulkhead assembly to the rear bumper with two 3/8–16 x 1" lg. screws and 3/8–16 locknuts (Fig. 5).

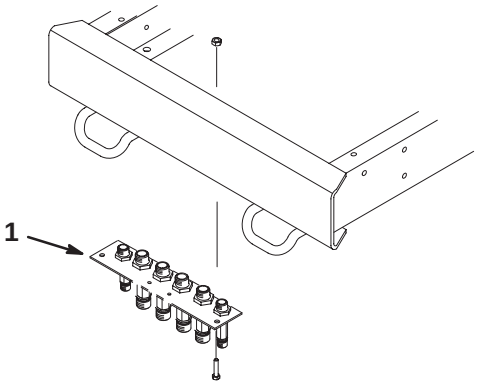

Figure 5

1. Bulkhead assembly

3. Install the hoses from the wheel motors to the rear bulkhead assembly (Fig. 6).

Note: The two hoses in the center of the rear bulkhead assembly go to the rear port holes that are closest to the rear of the unit. The outside hoses attach to the port holes that are closest to the front of the unit.

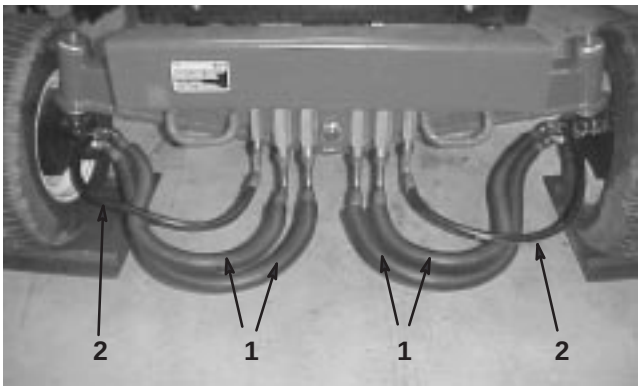

Figure 6

1. Wheel motor hoses (Part No. 100–3910)
2. Wheel motor drain hoses (Part No. 100–3912)

4. Install a Tee fitting to the rear bulkhead plate as shown in figure. 7.

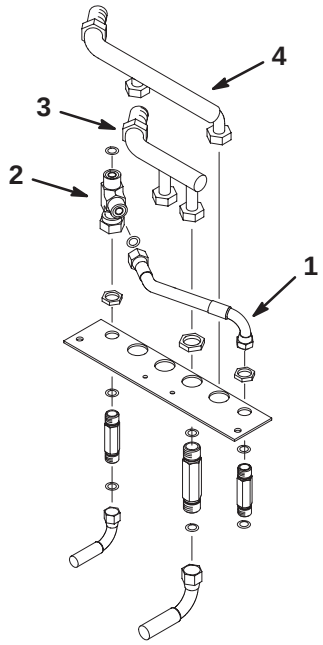

Figure 7

1. Bulkhead hose (Part No. 100–3911)
2. Tee fitting
3. Hydraulic tube (short)
4. Hydraulic tube (long)

5. Install the bulkhead hose as shown in figure. 7.

6. Reinstall the hydraulic tubes to the rear bulkhead assembly. Install the longer tube first.

7. Attach the block bracket to the frame with two 5/16–18 x 3/4” lg. self tapping screws and washers (Fig. 8).

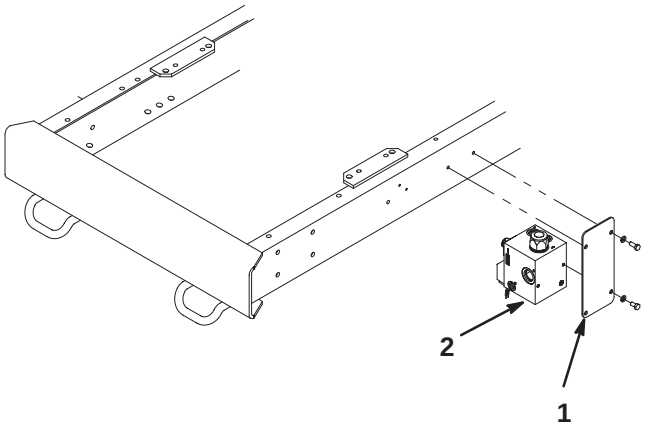

Figure 8

1. Block bracket
2. Control block

8. Remove the two bolts from the cover on the bottom of the Hydrostat. Install the switch bracket to the cover and the hydrostat with the two bolts previously removed and the two .312 x .750 washers, which are included in the kit (Fig. 9 & 10).

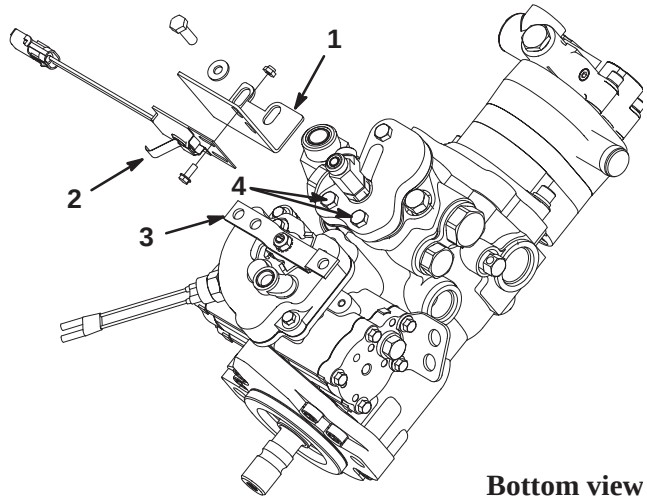

Bottom view

Figure 9

1. Switch bracket
2. Switch arm
3. Hydrostat arm
4. Cover mounting bolts

9. Mount the mechanical switch to the switch bracket with two #10–24 screws and nuts positioning it so the arm on the switch in is contact with the arm on the hydrostat (Fig. 9 & 10). Engage the switch by sliding the switch and the switch bracket towards the arm on the hydrostat until a click is heard. Then, slide the switch and the switch bracket away from the arm on the hydrostat until it clicks again (resets).Tighten the bolts securing the switch bracket to the hydrostat.

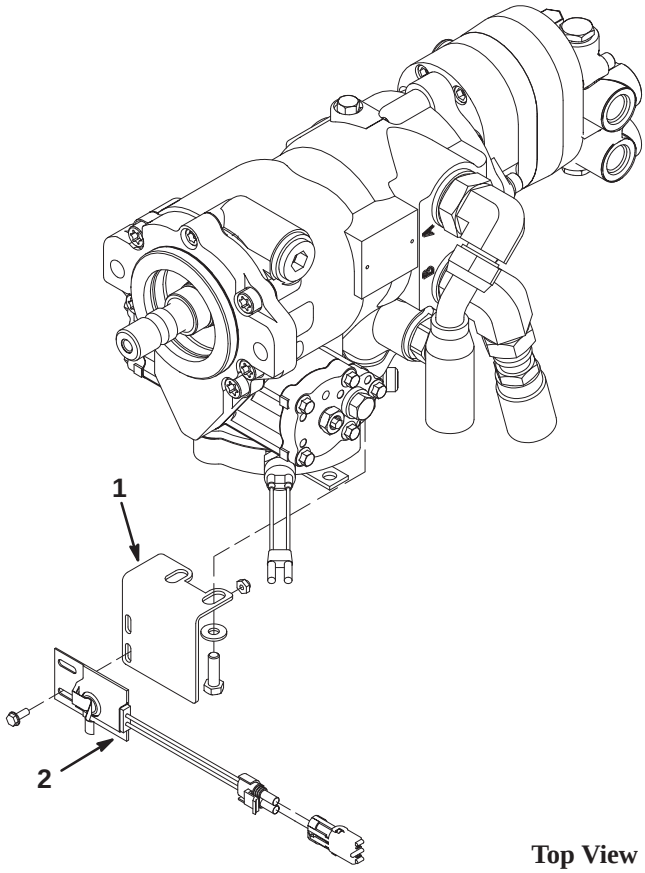

Top View

Figure 10

1. Switch bracket
2. Switch

10. To check the position and the operation of the switch, depress the traction pedal fully in reverse and measure the gap between the arm and the switch body. The gap should be a minimum of 1/8” (Fig. 11).

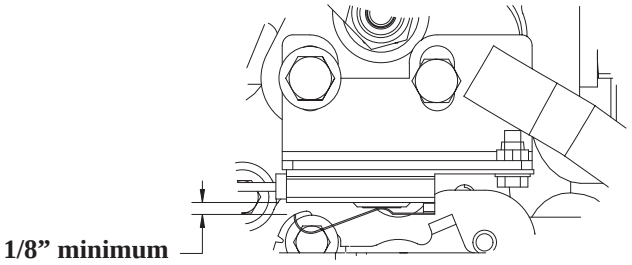

Figure 11

11. Insert the spacer into the hose clamp. Attach the hose clamp to the hose bracket with two 1/4–20 x 2–1/2" lg. screws and nuts. Remove the bolts and locknuts from the left front motor mount, near the left side of the carrier frame and discard the locknuts. Install the hose bracket and hose clamp with the previously removed bolts and two new locknuts (Fig. 12).

Note: Hose 100–3913 routes through the hose clamp (Fig. 12).

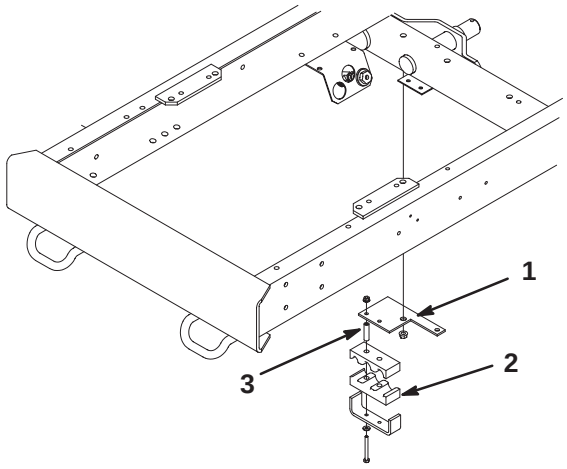

Figure 12

1. Hose bracket
2. Hose clamp
3. Spacer

12. Mount the control block to the block bracket with two 5/16–18 x 5/8" lg. screws and washers (Fig. 8).

13. Install the remaining hoses, positioning as shown in figure 13. Use figures 14 –17 for reference during installation.

Note: Route hoses 106–0197, 106–0190 & 100–3919 above the wing deck carrier frame, on top of existing long hydraulic tubes and next to main wire harness.

Note: Hoses 106–0197 & 106–0198 are connected to the control block and front bulkhead fittings. Remove caps from fittings.

Note: Hose 76–9570 connects to existing Tee fitting located at R.H. bulkhead for the right, deck motor hydraulic hoses.

Note: Hose 100–3915 connects to existing Tee fitting located at L.H. bulkhead connections for the left, deck motor hydraulic hoses

Note: Hose 100–3919 connects to existing Tee fitting located on the underside of the hydrostat.

14. Secure all new hoses with cable ties. Make sure hoses do not contact any hot or moving parts.

Note: Route hose 100–3914 under oil pan allowing a 4" gap between oil pan and hose.

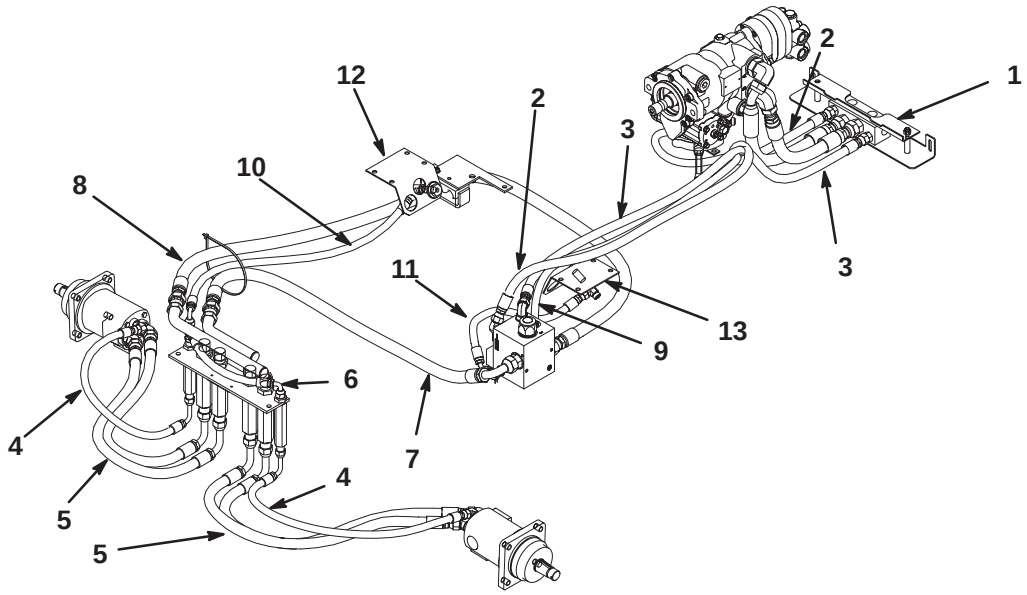

Figure 13

1. Front Bulkhead
2. Part No. 106–0197
3. Part No. 106–0198
4. Part No 100–3912
5. Part No 100–3910
6. Part No 100–3911
7. Part No 100–3914
8. Part No 100–3913
9. Part No. 100–3919
10. Part No 100–3915
11. Part No 76–9570
12. L.H. Bulkhead
13. R.H. Bulkhead

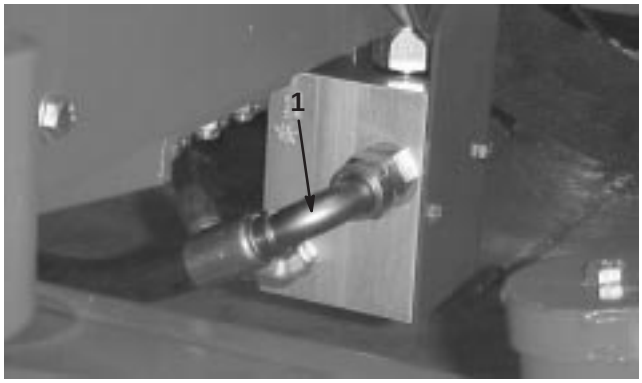

Figure 14

1. Hose (Part No. 100–3914)

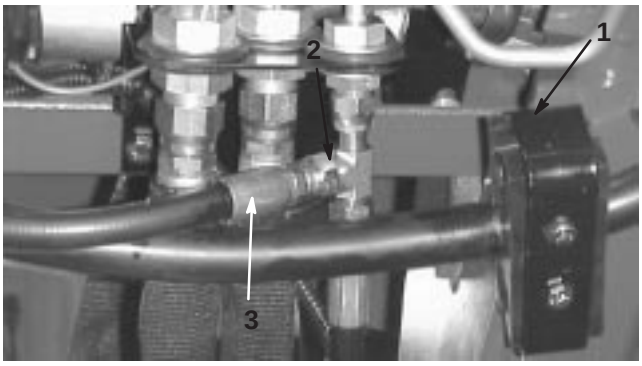

Figure 15

1. Clamp
2. Tee fitting
3. Hose (Part No. 100–3915)

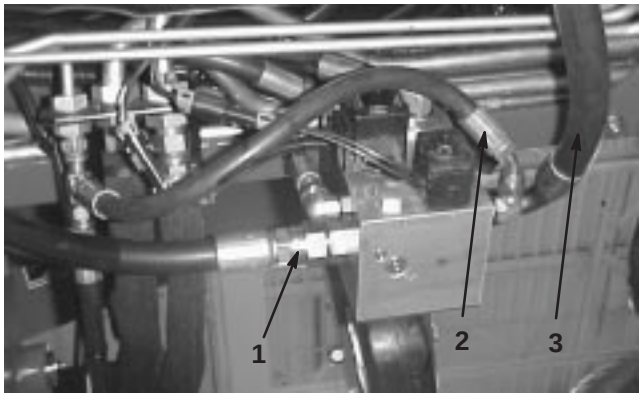

Figure 16

1. Hose (Part No. 100–3913)
2. Hose (Part No. 76–9570)
3. Hose (Part No. 100–3914)

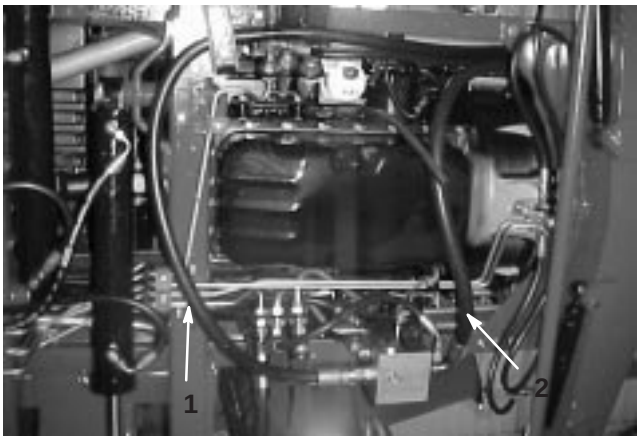

Figure 17

1. Hose (Part No. 100–3913)
2. Hose (Part No. 100–3914)

Installing Wire Harness and Bumper Guard

1. Attach the four–wheel–drive toggle switch to the right of the ignition switch on the control panel.

2. Install the new wire harness by following the electrical schematic. Route the harness under and out the back of the cup holder. The harness should continue straight down the outside of the shrouding to the existing wire harness and run along side of it.

3. Attach the bumper bracket to the frame using eight 3/8–16 x 1–1/4" lg. bolts, washers, and nuts. (Fig. 18).

4. Secure the guard assembly to the bumper bracket with four carriage bolts (Fig. 18).

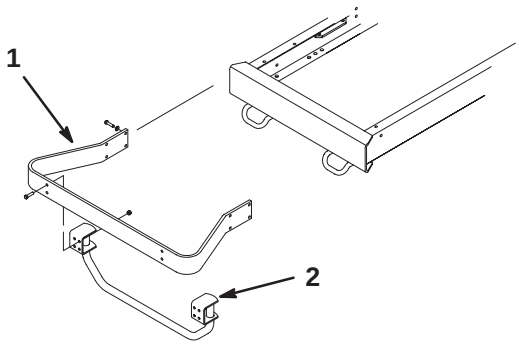

Figure 18

1. Bumper bracket
2. Guard assembly

Install Decals

1. Using the dimensions shown in figure 19, locate and affix a 4 wheel drive decal to each side of machine.

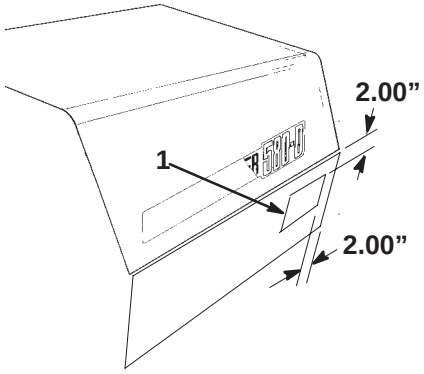

Figure 19

1. Decal

Operation

Toggle the switch in the on or forward position to engage the four wheel drive in forward. Toggle the switch in the momentary or reverse position will engage the four wheel drive in reverse.

Note: The Four Wheel Drive Kit is designed as a traction assist to the front traction wheels. In wet conditions or during a steep hill climb, loss of traction may occur causing the front tires to spin.

Note: The rear tires will not spin freely causing loss of steering.

Note: Come to a complete stop before engaging or disengaging the four wheel drive.

Note: Refer to Traction Unit Operator’s Manual for proper towing procedures.

Note: Mow speed will drop from 7.5 mph to 5.2 mph with 4 wheel drive engaged.
Transport speed will drop from 20 mph to 13 mph with 4 wheel drive engaged.

Check Hydraulic Lines

Check the hydraulic lines and hoses for leaks, loose fittings, kinked lines, and loose mounting supports. Make necessary repairs before operating.

Note: Keep areas around the hydraulic system clean from grass and debris build up.

⚠ WARNING

POTENTIAL HAZARD
- **Hydraulic fluid escaping under pressure can penetrate skin and cause injury.**

WHAT CAN HAPPEN
- **Fluid accidentally injected into the skin must be surgically removed within a few hours by a doctor familiar with this form of injury or gangrene may result.**

HOW TO AVOID THE HAZARD
- **Keep body and hands away from pin hole leaks or nozzles that eject high pressure hydraulic fluid.**
- **Use cardboard or paper to find hydraulic leaks.**

HYDRAULIC SCHEMATIC

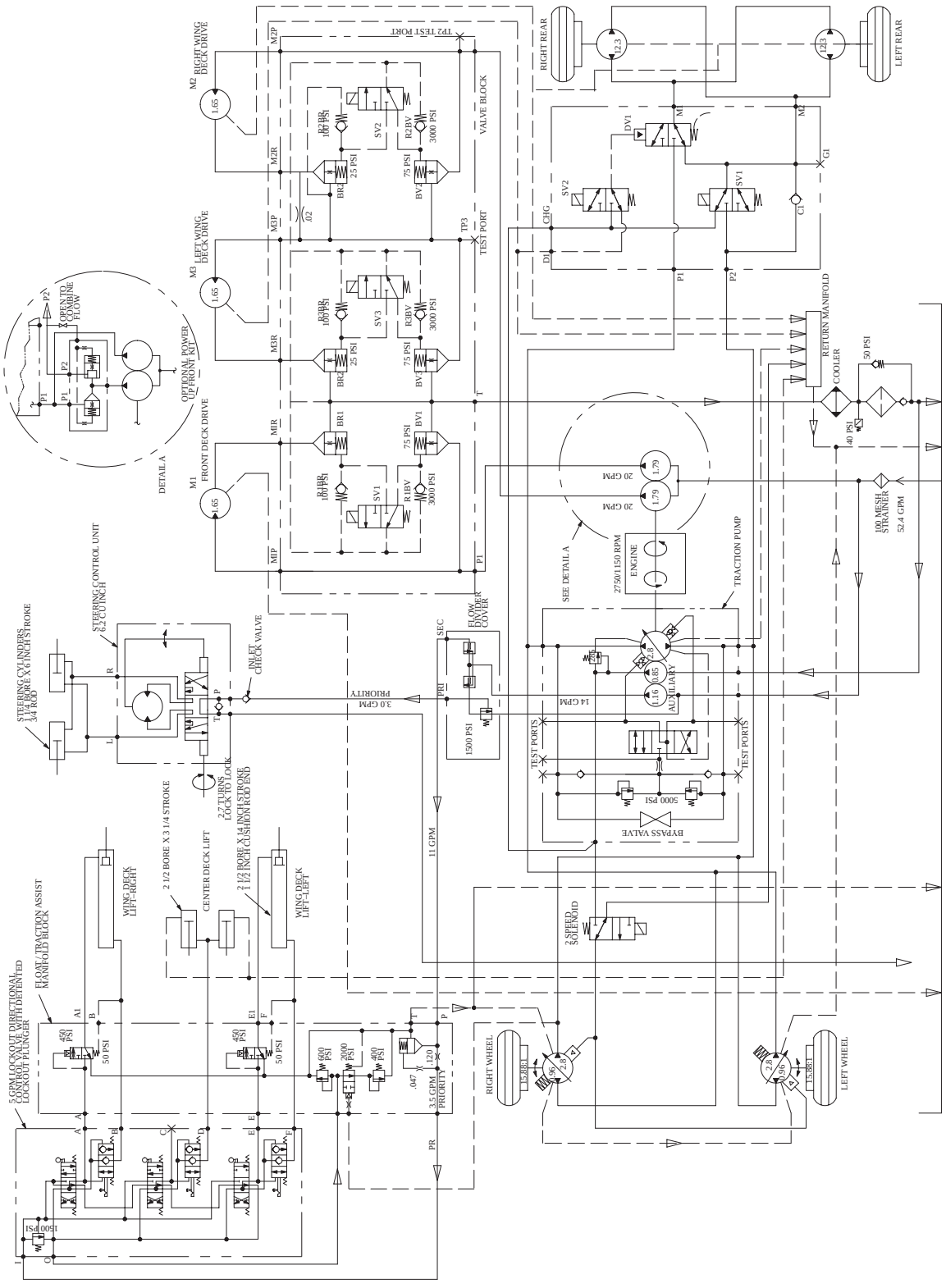

ELECTRICAL SCHEMATIC

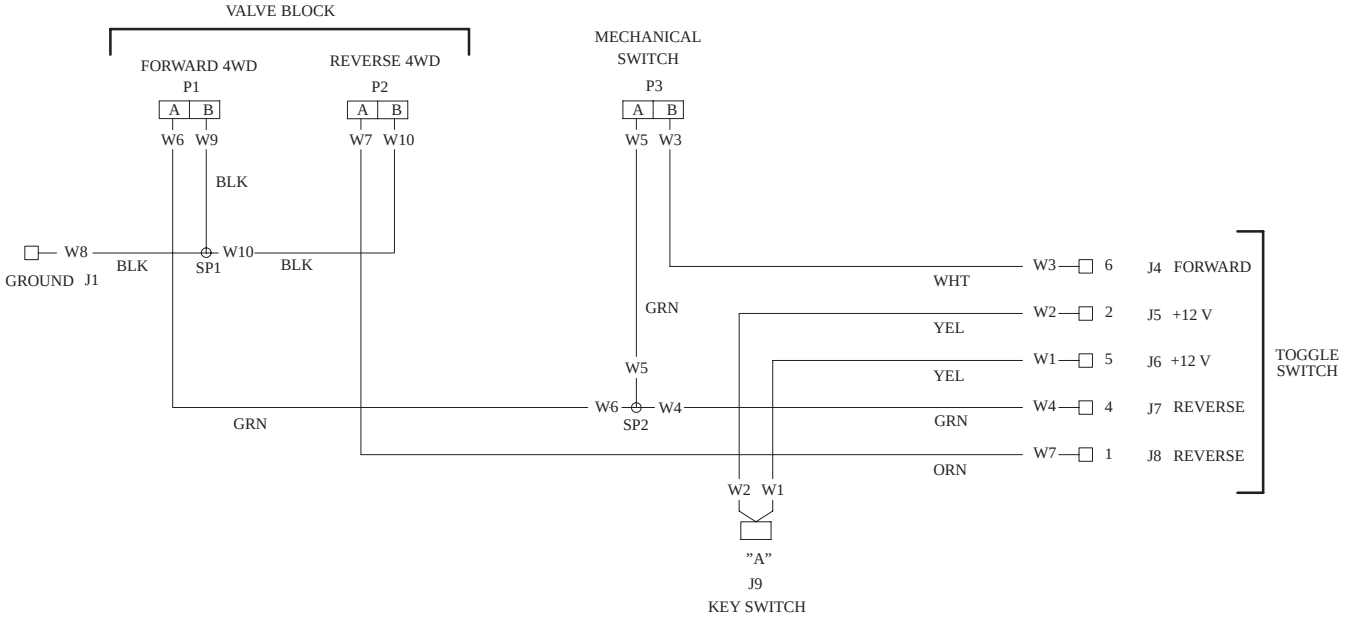

WIRE HARNESS

