Form No. 3480-178 Rev B

TORO

Count on it.

Operator's Manual

Flex-Force Power System® 60V MAX Axial Blower

Model No. 51900T—Serial No. 326000000 and Up

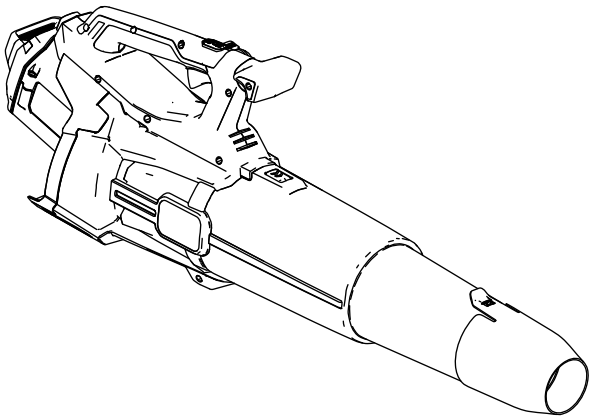

Register at www.Toro.com.
Original Instructions (EN)

CE UK CA

3480-178



For assistance, please see www.Toro.com/support for instructional resources or contact your Authorized Service Dealer before returning this product.

This product complies with all relevant European directives; for details, please see the separate product specific Declaration of Conformity (DOC) sheet.

Introduction

This blower is intended to be used by residential homeowners to move leaf-like debris as needed outdoors. It is designed to use Flex-Force™ 60V lithium-ion battery packs. These battery packs are designed to be charged only by Flex-Force 60V lithium-ion battery chargers. Using these products for purposes other than their intended use could prove dangerous to you and bystanders.

Model 51900T does not include a battery or a charger.

Read this information carefully to learn how to operate and maintain your product properly and to avoid injury and product damage. You are responsible for operating the product properly and safely.

Visit www.Toro.com for more information, including safety tips, training materials, accessory information, help finding a dealer, or to register your product.

© 2026—The Toro® Company
8111 Lyndale Avenue South
Bloomington, MN 55420

Register at www.Toro.com.

Original Instructions (EN)
Printed in China
All Rights Reserved

3480-178

Whenever you need service, genuine Toro parts, or additional information, contact an Authorized Service Dealer or Toro Customer Service and have the model and serial numbers of your product ready. Figure 1 identifies the location of the model and serial numbers on the product. Write the numbers in the space provided.

Important: **With your mobile device, you can scan the QR code (if equipped) on the serial number plate to access warranty, parts, and other product information.**

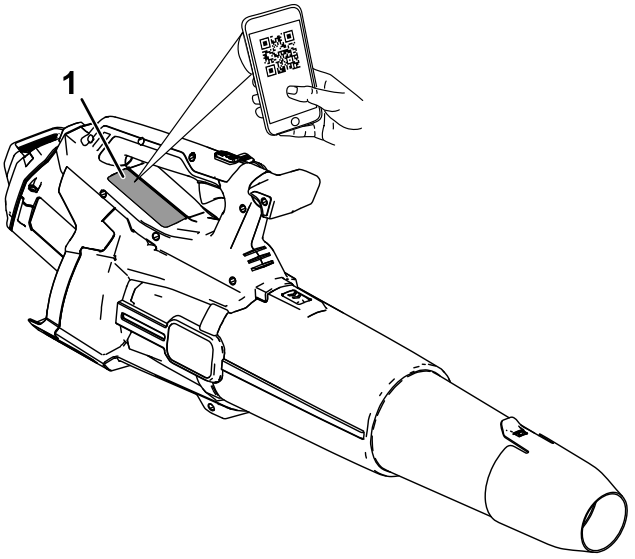

g472719

Figure 1

1. Model and serial number location.

Model No. _____

Serial No. _____

Safety-Alert Symbol

The safety-alert symbol (Figure 2) shown in this manual and on the machine identifies important safety messages that you must follow to prevent accidents.



g000502

Figure 2
Safety-alert symbol

The safety-alert symbol appears above information that alerts you to unsafe actions or situations and is followed by the word **DANGER**, **WARNING**, or **CAUTION**.

DANGER indicates an imminently hazardous situation which, if not avoided, **will** result in death or serious injury.

WARNING indicates a potentially hazardous situation which, if not avoided, **could** result in death or serious injury.

CAUTION indicates a potentially hazardous situation which, if not avoided, **may** result in minor or moderate injury.

This manual uses two other words to highlight information. **Important** calls attention to special mechanical information and **Note** emphasizes general information worthy of special attention.

Safety

⚠ WARNING

Read all safety warnings, instructions, illustrations and specifications provided with this machine.

Failure to follow all instructions listed below may result in electric shock, fire and/or serious injury.

Save all warnings and instructions for future reference.

The term "machine" in all the warnings refers to your mains-operated (corded) machine or battery-operated (cordless) machine.

IMPORTANT SAFETY INSTRUCTIONS

I. Work area safety

1. **Keep work area clean and well lit.** *Cluttered or dark areas invite accidents.*
2. **Do not operate machines in explosive atmospheres, such as in the presence of flammable liquids, gases, or dust.** *Machines create sparks which may ignite the dust or fumes.*
3. **Keep children and bystanders away while operating a machine.** *Distractions can cause you to lose control.*

II. Electrical safety

1. **Machine plugs must match the outlet. Never modify the plug in any way. Do not use any adapter plugs with earthed (grounded) machines.** *Unmodified plugs and matching outlets will reduce risk of electric shock.*
2. **Avoid body contact with earthed or grounded surfaces, such as pipes, radiators, ranges and refrigerators.** *There is an increased risk of electric shock if your body is earthed or grounded.*
3. **Do not expose machines to rain or wet conditions.** *Water entering a machine will increase the risk of electric shock.*
4. **Do not abuse the cord. Never use the cord for carrying, pulling or unplugging the machine. Keep cord away from heat, oil, sharp edges or moving parts.** *Damaged or entangled cords increase the risk of electric shock.*

5. **When operating a machine outdoors, use an extension cord suitable for outdoor use.** *Use of a cord suitable for outdoor use reduces the risk of electric shock.*

6. **If operating a machine in a damp location is unavoidable, use a residual current device (RCD) protected supply.** *Use of an RCD reduces the risk of electric shock.*

III. Personal safety

1. **Stay alert, watch what you are doing and use common sense when operating a machine. Do not use a machine while you are tired or under the influence of drugs, alcohol, or medication.** *A moment of inattention while operating machines may result in serious personal injury.*

2. **Use personal protective equipment. Always wear eye protection.** *Protective equipment such as a dust mask, non-skid safety shoes, hard hat, or hearing protection used for appropriate conditions reduces personal injuries.*

3. **Prevent unintentional starting. Ensure the switch is in the OFF-position before connecting to power source and/or battery pack, picking up or carrying the tool.** *Carrying machines with your finger on the switch or energizing machines that have the switch on invites accidents.*

4. **Remove any adjusting key or wrench before turning the machine on.** *A wrench or a key left attached to a rotating part of the machine may result in personal injury.*

5. **Do not overreach. Keep proper footing and balance at all times.** *This enables better control of the machine in unexpected situations.*

6. **Dress properly. Do not wear loose clothing or jewelry. Keep your hair and clothing away from moving parts.** *Loose clothes, jewelry, or long hair can be caught in moving parts.*

7. **If devices are provided for the connection of dust extraction and collection facilities, ensure these are connected and properly used.** *Use of dust collection can reduce dust-related hazards.*

8. **Do not let familiarity gained from frequent use of tools allow you to become complacent and ignore tool safety principles.** *A careless action can cause severe injury within a fraction of a second.*

IV. Machine use and care

1. **Do not force the machine. Use the correct machine for your application.** *The correct machine will do the job better and safer at the rate for which it was designed.*

2. **Do not use the machine if the switch does not turn it on and off.** *Any machine that cannot be controlled with the switch is dangerous and must be repaired.*

3. **Disconnect the plug from the power source and/or remove the battery pack, if detachable, from the machine before making any adjustments, changing accessories, or storing machines.** *Such preventive safety measures reduce the risk of starting the machine accidentally.*

4. **Store idle machines out of the reach of children and do not allow persons unfamiliar with the machine or these instructions to operate the machine.** *Machines are dangerous in the hands of untrained users.*

5. **Maintain machines and accessories. Check for misalignment or binding of moving parts, breakage of parts, and any other condition that may affect the machine's operation. If damaged, have the machine repaired before use.** *Many accidents are caused by poorly maintained machines.*

6. **Keep cutting tools sharp and clean.** *Properly maintained cutting tools with sharp cutting edges are less likely to bind and are easier to control.*

7. **Use the machine, accessories, and tool bits etc. in accordance with these instructions, taking into account the working conditions and the work to be performed.** *Use of the machine for operations different from those intended could result in a hazardous situation.*

8. **Keep handles and grasping surfaces dry, clean and free from oil and grease.** *Slippery handles and grasping surfaces do not allow for safe handling and control of the tool in unexpected situations.*

V. Battery tool use and care

1. **Recharge only with the charger specified by the manufacturer.** *A charger that is suitable for one type of battery pack may create a risk of fire when used with another battery pack.*

2. **Use machines only with specifically designated battery packs.** *Use of any other battery packs may create a risk of injury and fire.*

3. **When battery pack is not in use, keep it away from other metal objects, like paper clips, coins, keys, nails, screws or other small metal objects, that can make a connection from one terminal to another.** *Shorting the battery terminals together may cause burns or a fire.*

4. **Under abusive conditions, liquid may be ejected from the battery; avoid contact. If contact accidentally occurs, flush with water. If liquid contacts eyes, additionally seek medical help.** *Liquid ejected from the battery may cause irritation or burns.*
5. **Do not use a battery pack or tool that is damaged or modified.** *Damaged or modified batteries may exhibit unpredictable behavior resulting in fire, explosion or risk of injury.*
6. **Do not expose a battery pack or tool to fire or excessive temperature.** *Exposure to fire or temperature above 130 °C (265 °F) may cause explosion.*
7. **Follow all charging instructions and do not charge the battery pack or tool outside the temperature range specified in the instructions.** *Charging improperly or at temperatures outside the specified range may damage the battery and increase the risk of fire.*

VI. Service

1. **Have your machine serviced by a qualified repair person using only identical replacement parts.** *This will ensure that the safety of the machine is maintained.*
2. **Never service damaged battery packs.** *Service of battery packs should only be performed by the manufacturer or authorized service providers.*

VII. Blower safety

1. **Do not use the machine in bad weather conditions, especially when there is a risk of lightning.** *This decreases the risk of being struck by lightning.*
2. **Wear eye protection and ear protection.** *Adequate protective equipment will reduce the risk of personal injury.*
3. **While operating the machine, always wear non-slip and protective footwear. Do not operate the machine when barefoot or wearing open sandals.** *This reduces the risk of injury to the feet.*
4. **Do not wear loose fitting clothing or articles such as scarves, strings, chains, ties, etc., that could get drawn into the air inlets. Tie back or cover long hair to make sure it does not get drawn into the air inlets.** *If any of these items are drawn into the air inlets, it can increase the risk of personal injury.*
5. **Keep bystanders away while operating the machine.** *Thrown debris can increase the risk of personal injury.*
6. **Never point the blower nozzle in the direction of people or pets or in the direction of windows. Use extra caution when blowing**

debris near solid objects, such as trees, automobiles and walls that can cause debris to ricochet. *Thrown objects can damage property and increase the risk of personal injury.*

7. **Do not use the machine to blow anything that is burning or smoking, such as cigarettes, matches or hot ashes.** *These ignition sources may increase the risk of fire.*
8. **Do not touch the fan while still in motion. Turn off the machine and wait until the fan stops before removing any part that may give access to the fan.** *This reduces the risk of injury from moving parts.*
9. **When clearing jammed material or servicing the machine, make sure the power switch is off.** *Unexpected starting of the machine while clearing jammed material or servicing may result in serious personal injury.*

SAVE THESE INSTRUCTIONS

Decal Symbols



Safety decals and instructions are easily visible to the operator and are located near any area of potential danger. Replace any decal that is damaged or missing.

The following tables describe the safety and instructional symbols that appear on the decals.

Blower Decal Symbol	Explanation
	Thrown objects hazard
	Warning
	Do not operate in wet conditions.
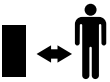	Keep bystanders away.
	Keep bystanders away from the machine in all directions.
	Stay away from moving parts.
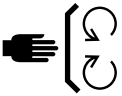	Keep all guards and shields in place.
	Read the *Operator's Manual*.
	Remove the battery pack before performing maintenance.
	Wear eye and ear protection.

Setup

Assembling the Blower

1. Install the blower nozzle to the blower tube.

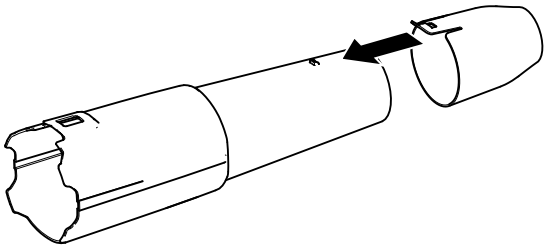

g472735

Figure 3

2. Slide the blower tube onto the blower housing. You may need to press down on the tube latch for the blower tube to lock into place (Figure 3).

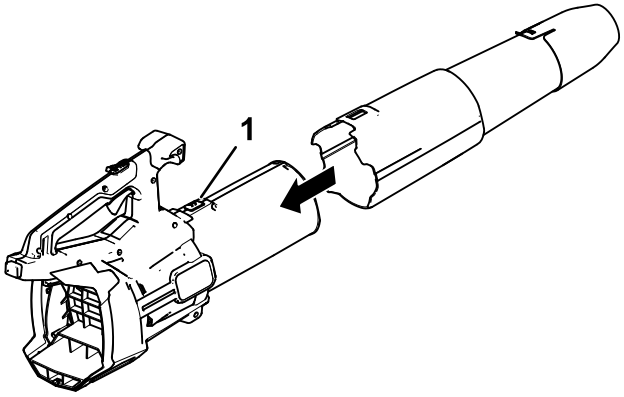

g472734

Figure 4

1. Tube latch

Note: The blower can also be operated without the nozzle, or with the blower tube removed completely.

Installing the Shoulder Harness

Important: **If you are using the leaf blower with a 6.0 Ah or greater battery pack installed, install the shoulder harness (Part No. 139-5334).**

Do not use the shoulder harness if you are powering the tool with the backpack and backpack tether; use only the backpack harness.

1. Install the collar to the handle knob (Figure 5).

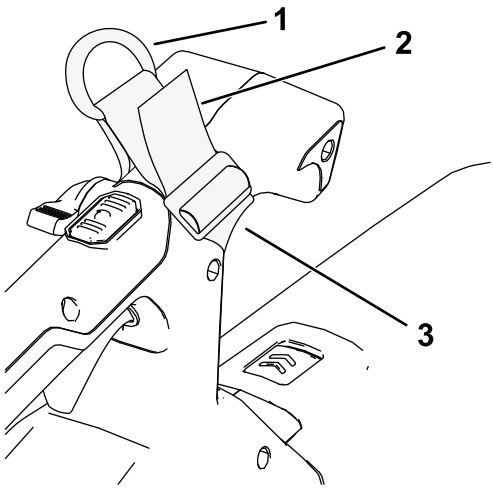

g484060

Figure 5

1. D-ring
2. Pull here to secure the collar to the blower.
3. Strap collar

2. Connect the clip on the shoulder harness to the D-ring of the collar (Figure 6).

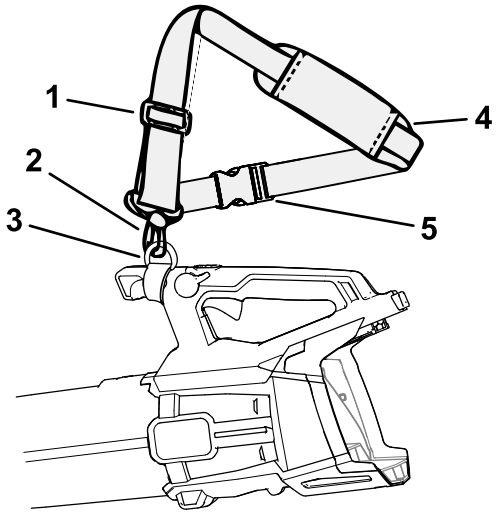

g484073

Figure 6

1. Harness adjuster
2. Harness clip
3. D-Ring
4. Shoulder harness

3. Adjust the harness by slide the harness adjuster up to decrease the length of the harness, or down to increase the length of the harness.
4. Know how to remove the shoulder harness in an emergency; refer to Removing the Shoulder Harness (page 18).

Product Overview

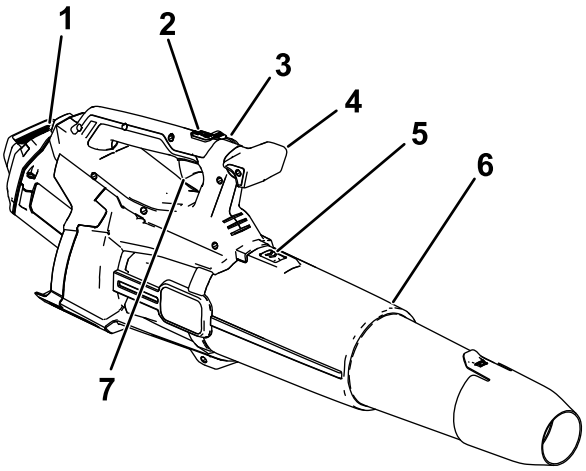

g472736

Figure 7

1. Battery and battery cavity
2. Turbo boost button
3. Speed lock
4. Handle knob
5. Blower tube latch
6. Blower tube
7. Variable-speed trigger

Specifications

Model	51900T
Rated Voltage	60V DC maximum, 54 VDC nominal usage
Charger Type	Flex-Force 60V lithium-ion chargers
Battery Type	Flex-Force 60V lithum-ion batteries

Appropriate Temperature Ranges

Charge/ store the battery pack at	5°C (41°F) to 40°C (104°F)*
Use the battery pack at	-30°C (-22°F) to 49°C (120°F)
Use the blower at	-30°C (-22°F) to 49°C (120°F)

*Charging time will increase if you do not charge the battery within this range.

Store the tool, battery pack, and battery charger in an enclosed clean, dry area.

Attachments/Accessories

A selection of Toro approved attachments and accessories is available for use with the machine to enhance and expand its capabilities. Contact your Authorized Service Dealer or authorized Toro distributor or go to www.Toro.com for a list of all approved attachments and accessories.

To ensure optimum performance and continued safety certification of the machine, use only genuine Toro replacement parts and accessories. Replacement parts and accessories made by other manufacturers could be dangerous.

Operation

⚠ WARNING

The blower can throw debris, possibly causing serious personal injury to you or bystanders.

- **Do not blow hard objects, such as nails or bolts.**
- **Do not operate the blower near bystanders or pets.**
- **Be careful of blowing direction (i.e., blow away from bystanders, windows, automobiles, etc.). Only use as much speed as required.**
- **Use extra care when cleaning debris from stairs or other tight areas.**

Starting the Blower

Important: **Use the battery pack only in temperatures that are within the appropriate range; refer to Specifications (page 15).**

Note: Ensure that you use a battery pack larger than 2.5 Ah to reach full power.

1. Ensure that the vents on the blower are clear of any dust and debris.
2. Align the cavity on the battery pack with the tongue in the handle housing (Figure 9).
3. Grasp the handle, and push the battery pack into the handle until the latch locks into place (Figure 8).

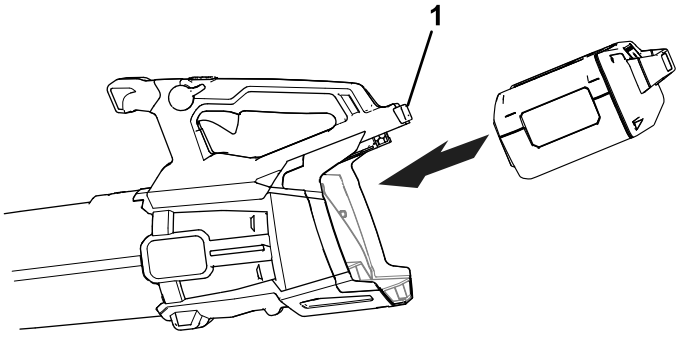

g472718

Figure 8

1. Battery latch

4. To start the blower, squeeze the variable-speed trigger (Figure 9).

   Note: Engage the speed lock to keep the machine on without pressing the variable-speed trigger (Figure 9).

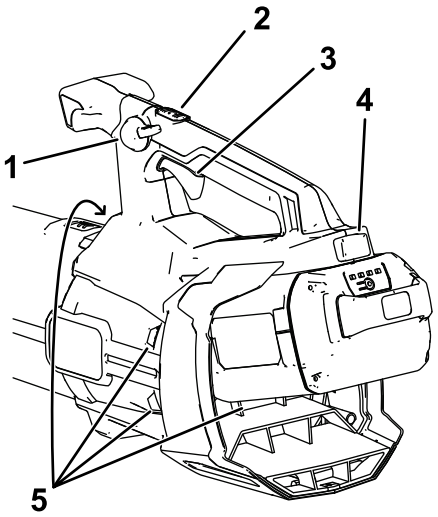

g472737

Figure 9

1. Speed lock
2. Turbo boost button
3. Variable-speed trigger
4. Battery latch
5. Blower venting areas

Adjusting the Air Speed of the Blower

To adjust the air speed as you blow, use the variable-speed trigger (Figure 9).

To maintain the current air speed, engage the speed lock (Figure 9).

To achieve maximum performance, depress the variable-speed trigger, then press the turbo boost button to turn boost on (Figure 9).

To turn boost off, press the turbo boost button again or completely release the variable speed trigger.

Removing the Shoulder Harness

If there is an emergency and you need to rapidly remove the harness, disconnect the quick-release buckle as follows:

1. Press in on the sides of the buckle (A of Figure 10).
2. Allow the buckle to disconnect (B of Figure 10).

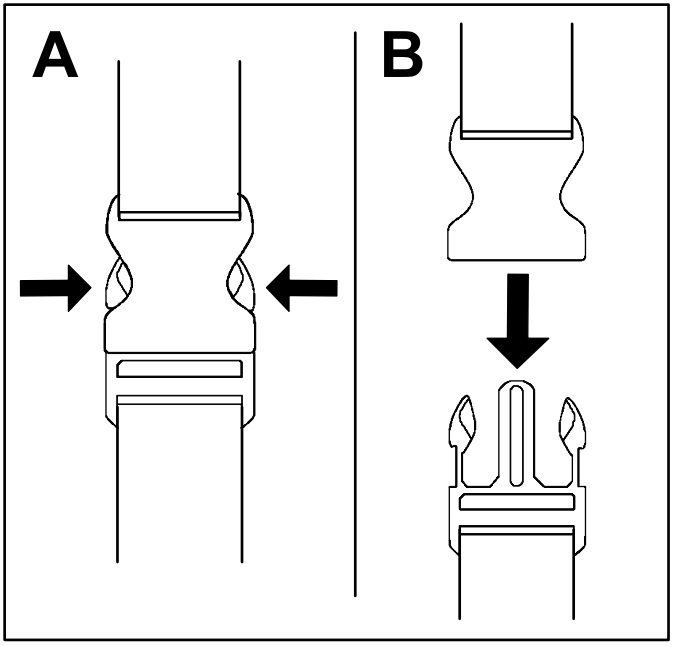

g340477

Figure 10

Shutting Off the Blower

To shut off the blower, disengage the speed lock (if in use) and release the variable-speed trigger (Figure 9).

Important: **After stopping the blower, do not leave the speed lock engaged with the battery pack in the blower.**

Whenever you are not using the blower or are transporting the blower to or from the work area, remove the battery pack.

Removing the Blower Tube

Press down on the tab latch to separate the blower tube from the blower (Figure 11).

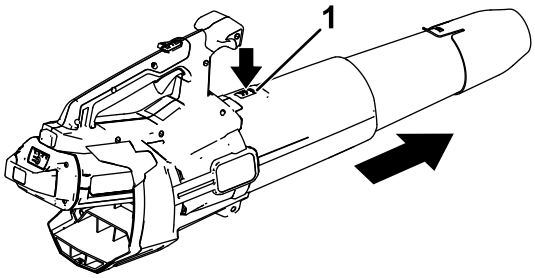

g472738

Figure 11

1. Tube latch

Removing the Battery from the Blower

Press the battery latch to release the battery pack and slide the battery pack out of the blower (Figure 12).

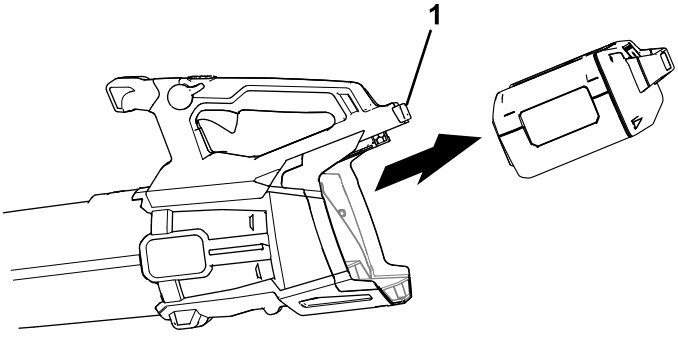

g472739

Figure 12

1. Battery latch

Storage

Important: **Store the tool, battery pack, and charger only in temperatures that are within the appropriate range; refer to Specifications (page 15).**

Important: **If you are storing the battery pack for the off-season, remove the battery pack from the tool and charge the battery pack until 1 or 2 LED indicators turn green on the battery. Do not store a fully charged or fully depleted battery. When you are ready to use the tool again, charge the battery pack until the left indicator light turns green on the charger or all 4 LED indicators turn green on the battery.**

- Disconnect the product from the power supply (i.e., remove the plug from the power supply or the battery pack) and check for damage after use.
- Do not store the tool or battery charger with the battery pack installed.
- Clean all foreign material from the product.
- When not in use, store the tool, battery pack, and battery charger out of the reach of children.
- Keep the tool, battery pack, and battery charger away from corrosive agents, such as garden chemicals and de-icing salts.
- To reduce the risk of serious personal injury, do not store the battery pack outside or in vehicles.
- Store the tool, battery pack, and battery charger in an enclosed clean, dry area.

Preparing the Battery Pack for Recycling

Important: **Upon removal, cover the terminals of the battery pack with heavy-duty adhesive tape. Do not attempt to destroy or disassemble the battery pack or remove any of its components.**



Contact your local municipality or your authorized Authorized Service Dealer or distributor for more information on how to responsibly recycle the battery.

	Lithium-ion battery packs labeled with the Call2Recycle seal can be recycled at any participating retailer or battery recycling facility in the Call2Recycle program (US and Canada only). To locate a participating retailer or facility closest to you, please call 1-800-822-8837 or visit www.call2recycle.org.
	Lithium-ion battery packs labeled with the High Energy Battery (HEB) seal shown here, and any 60V Flex-Force batteries 6.0 Ah or greater, can be recycled at any participating dealer or retailer in the Call2Recycle HEB program. To locate a participating dealer or retailer closest to you, please visit www.hebattery.org.

If you cannot locate a participating retailer or facility nearby, or have questions about which recycling program your battery pack may qualify for, please visit the customer support site listed in the operator's manual for your tool/equipment for more information on how to responsibly recycle the battery pack.

If you are located outside of the US and Canada, please contact your Authorized Service Dealer or distributor for more information on how to responsibly recycle the battery pack.

Troubleshooting

Perform only the steps described in these instructions. All further inspection, maintenance, and repair work must be performed by an authorized service center or a similarly qualified specialist if you cannot solve the problem yourself.

Always remove the battery from the tool when troubleshooting, inspecting, maintaining, or cleaning the tool.

Problem	Possible Cause	Corrective Action
The tool does not start.	1. The battery is not fully installed in the tool.	1. Remove and then replace the battery into the tool, making sure that it is fully installed and latched.
	2. The battery pack is not charged.	2. Remove the battery pack from the tool and charge it.
	3. The battery pack is damaged.	3. Replace the battery pack.
	4. There is another electrical problem with the tool.	4. Contact an Authorized Service Dealer.
The tool does not reach full power.	1. The battery pack charge capacity is too low.	1. Remove the battery pack from the tool and fully charge the battery pack.
	2. The air vents are blocked.	2. Remove the battery pack from the tool and clean the air vents.
The tool does not run or does not run continuously.	1. There is moisture on the leads of the battery pack.	1. Allow the battery pack to dry or wipe it dry.
	2. The battery is not fully installed in the tool.	2. Remove and then replace the battery in the tool, ensuring that it is fully installed and latched.
	3. The battery pack is low on charge.	3. Charge the battery pack.



Count on it.