Form No. 3469-492 Rev B

TORO®

Count on it.

Operator's Manual

Flex-Force Power System® 60V Cordless Power Shovel™

Model No. 31803T—Serial No. 324000101 and Up

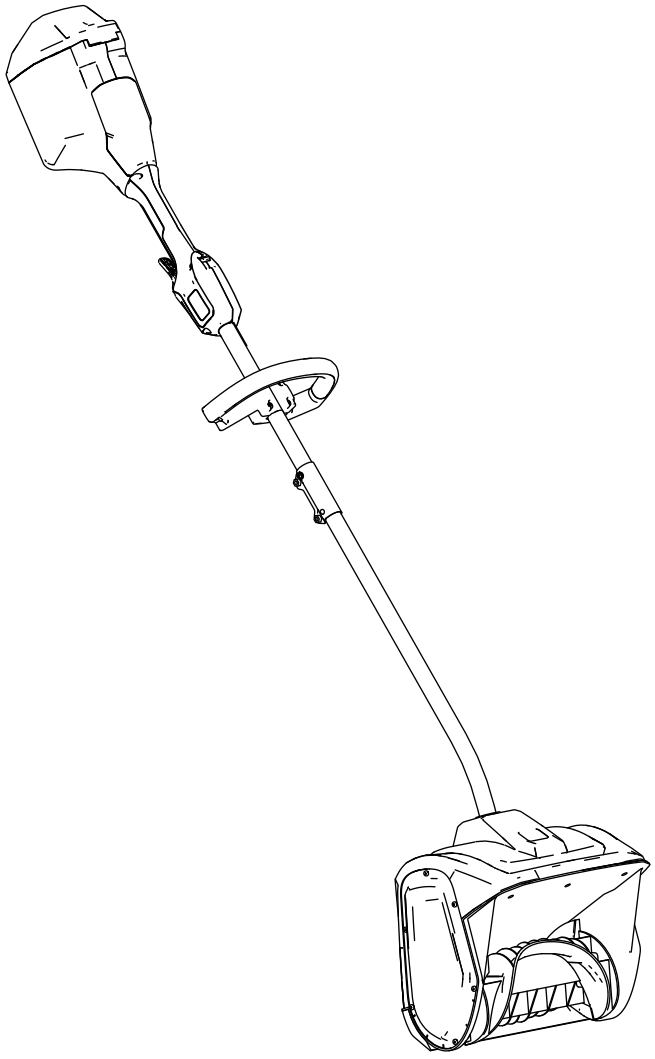

Register at www.Toro.com.
Original Instructions (EN)

CE UK CA

3469-492

For assistance, please see www.Toro.com/support for instructional resources or contact your Authorized Service Dealer before returning this product.

Introduction

This product is intended to be used by residential homeowners. It is designed for removing up to 15 cm (6 inches) of snow from patios, sidewalks, and small driveways. It is not designed for removing materials other than snow, nor is it designed for clearing off gravel surfaces. It is to be used only by adults. It is designed to use Flex-Force 60V lithium-ion battery packs. These battery packs are designed to be charged only by Flex-Force 60V lithium-ion battery chargers. Using these products for purposes other than their intended use could prove dangerous to you and bystanders.

Model 31803T does not include a battery or a charger.

Read this information carefully to learn how to operate and maintain your product properly and to avoid injury and product damage. You are responsible for operating the product properly and safely.

Visit www.Toro.com for more information, including safety tips, training materials, accessory information, help finding a dealer, or to register your product.

Whenever you need service, genuine Toro parts, or additional information, contact an Authorized Service Dealer or Toro Customer Service and have the model and serial numbers of your product ready. Figure 1 identifies the location of the model and serial numbers on the product. Write the numbers in the space provided.

Important: **With your mobile device, you can scan the QR code (if equipped) on the serial number plate to access warranty, parts, and other product information.**

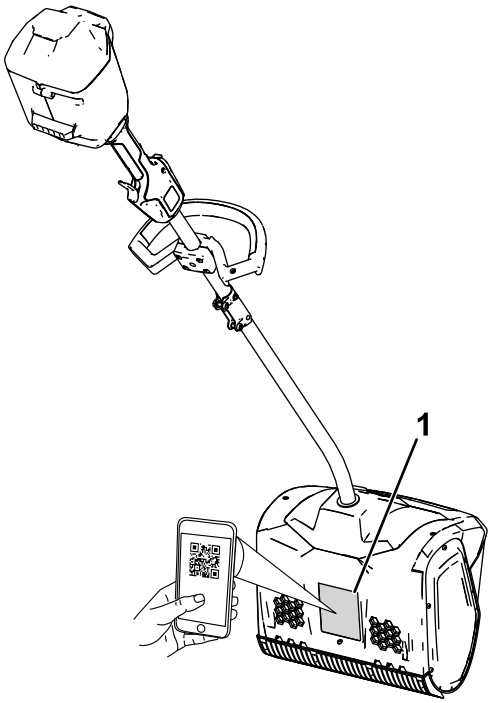

g427112

Figure 1

1. Model and serial number location.

Model No. _____

Serial No. _____

© 2026—The Toro® Company
8111 Lyndale Avenue South
Bloomington, MN 55420

Contact us at www.Toro.com.
Printed in China
All Rights Reserved

Safety-Alert Symbol

The safety-alert symbol (Figure 2) shown in this manual and on the machine identifies important safety messages that you must follow to prevent accidents.



g000502

Figure 2

Safety-alert symbol

The safety-alert symbol appears above information that alerts you to unsafe actions or situations and is followed by the word **DANGER**, **WARNING**, or **CAUTION**.

DANGER indicates an imminently hazardous situation which, if not avoided, **will** result in death or serious injury.

WARNING indicates a potentially hazardous situation which, if not avoided, **could** result in death or serious injury.

CAUTION indicates a potentially hazardous situation which, if not avoided, **may** result in minor or moderate injury.

This manual uses two other words to highlight information. **Important** calls attention to special mechanical information and **Note** emphasizes general information worthy of special attention.

Contents

Safety-Alert Symbol ... 3
Safety ... 4
... 4
Safety and Instructional Decals ... 6
Setup ... 7
Unfolding the Handle ... 7
Installing the Auxiliary Handle ... 8
Product Overview ... 9
Specifications ... 9
Attachments/Accessories ... 9
Operation ... 10
Starting the Machine ... 10
Shutting Off the Machine ... 10
Removing the Battery Pack ... 11
Operating Tips ... 11
Maintenance ... 12
Replacing the Scraper Blade ... 12
Service ... 12
Storage ... 12
Troubleshooting ... 13

Safety

IMPORTANT SAFETY INSTRUCTIONS

⚠ WARNING

When using an electric machine, always read and follow basic safety warnings and instructions to reduce the risk of fire, electric shock, or injury, including the following:

Read All Instructions

I. Training

1. The operator of the machine is responsible for any accidents or hazards occurring to others or their property.
2. Read and understand the contents of this *Operator's Manual* before you start the machine. Ensure that everyone using this machine knows how to use it, knows how to shut it off quickly, and understands the warnings.
3. Do not allow children to use or play with the machine, battery pack, or the battery charger; local regulations may restrict the age of the operator.
4. Do not allow children or untrained people to operate or service this device. Allow only people who are responsible, trained, familiar with the instructions, and physically capable to operate or service the device.
5. Before using the machine, battery pack, and battery charger, read all the instructions and cautionary markings on these products.
6. Become familiar with the controls and proper use of the machine, battery pack, and battery charger.

II. Preparation

1. Keep bystanders and children out of the operating area.
2. Never allow children to operate the machine.
3. Do not operate the machine without all guards and other safety devices in place and functioning properly on the machine.
4. Inspect the area where you will use the machine and remove all objects that could interfere with the operation of the machine or that the machine could throw.
5. Use only the battery pack specified by Toro. Using other accessories and attachments may increase the risk of injury and fire.
6. Plugging the battery charger into an outlet that is not 100 to 240 V can cause a fire or electric shock. Do not plug the battery charger into an outlet other than 100 to 240V.
7. Do not use a damaged or modified battery pack or battery charger, which may exhibit unpredictable behavior that results in fire, explosion, or risk of injury.
8. If the supply cord to the battery charger is damaged, contact an Authorized Service Dealer to service or replace it.
9. Charge the battery pack with only the battery charger specified by Toro. A charger suitable for 1 type of battery pack may create a risk of fire when used with another battery pack.
10. Charge the battery pack in a well-ventilated area only.
11. Follow all charging instructions and do not charge the battery pack outside of the temperature range specified in the instructions. Otherwise, you may damage the battery pack and increase the risk of fire.
12. Dress properly—Wear appropriate clothing, including eye protection; long pants or trousers; substantial, slip-resistant footwear; and hearing protection. Tie back long hair and do not wear loose clothing or loose jewelry that can get caught in moving parts.

III. Operation

1. Contact with the moving rotor will cause serious injury. Keep your hands and feet away from all moving parts of the machine. Keep clear of any discharge opening.
2. Stay behind the rotor and away from the discharge opening while operating the machine.
3. Using this machine for purposes other than its intended use could prove dangerous to you and bystanders.
4. Prevent unintentional starting—Ensure that the switch is in the OFF position before connecting to the battery pack and handling the machine. Do not carry the machine with your finger on the switch or energize the machine with the switch in the ON position.
5. Use your full attention while operating the machine. Do not engage in any activity that causes distractions; otherwise, injury or property damage may occur.
6. Remove the battery pack from the machine, and wait for all movement to stop before adjusting, servicing, cleaning, or storing the machine.
7. Remove the battery pack from the machine whenever you leave it unattended or before changing accessories.

8. Do not force the machine—Allow the machine to do the job better and safer at the rate for which it was designed.
9. Stay alert—Watch what you are doing and use common sense when operating the machine. Do not use the machine while ill, tired, or under the influence of alcohol or drugs.
10. Operate the machine only in good visibility and appropriate weather conditions.
11. Use extreme caution when reversing or pulling the machine toward you.
12. Do not overreach—Keep proper footing and balance at all times, especially on slopes. Walk, never run with the machine.
13. When not actively clearing snow, disengage power to the auger.
14. Do not direct the discharge material toward anyone. Avoid discharging material against a wall or obstruction; material may ricochet toward you.
15. Do not use the machine on gravel surfaces.
16. If the machine strikes a foreign object, follow these steps:
    - Release the trigger and the safety interlock switch.
    - Remove the battery from the machine.
    - Inspect for damage.
    - Repair any damage before starting and operating the machine.
17. Shut off the machine and remove the battery before unclogging the machine and always use a stick or a cleanout tool to remove the clog.
18. Under abusive conditions, the battery pack may eject liquid; avoid contact. If you accidently come into contact with the liquid, flush with water. If the liquid contacts your eyes, seek medical help. Liquid ejected from the battery pack may cause irritation or burns.
19. Do not expose a battery pack or tool to fire or excessive temperature. Exposure to fire or temperature above 130°C (265°F) may cause explosion.
20. CAUTION—A mistreated battery pack may present a risk of fire, explosion, or chemical burn.
    - Do not disassemble the battery pack.
    - Replace the battery pack with a genuine Flex-Force battery pack only; using another type of battery pack may cause a fire or risk of injury.
    - Keep battery packs out of the reach of children and in the original packaging until you are ready to use them.

IV. Maintenance and Storage

1. Remove the battery pack from the machine, and wait for all movement to stop before adjusting, servicing, cleaning, or storing the machine.
2. Do not attempt to service or repair the machine, battery pack, or battery charger except as indicated in the instructions. Have an Authorized Service Dealer perform service using identical replacement parts to ensure that the product is safely maintained.
3. Wear gloves and eye protection when servicing the machine.
4. When servicing the rotor, be aware that the rotor can still move even though the power source is off.
5. For best performance, use only genuine Toro replacement parts and accessories. Other replacement parts and accessories could be dangerous.
6. Maintain the machine—Keep handles dry, clean, and free from oil and grease. Keep guards in place and in working order. Use identical replacement parts only.
7. Check all fasteners at frequent intervals for proper tightness to ensure that the machine is in safe working condition.
8. Check the machine for damaged parts. Check for misaligned and binding moving parts, broken parts, mounting, and any other condition that may affect its operation. Unless indicated in the instructions, have an Authorized Service Dealer repair or replace a damaged guard or part.
9. When the battery pack is not in use, keep it away from metal objects such as paper clips, coins, keys, nails, and screws that can make a connection from 1 terminal to another. Shorting the battery terminals may cause burns or a fire.
10. When you are not using the machine, store it indoors in a dry, secure place out of the reach of children.
11. When storing the machine for more than 30 days, refer to Storage (page 12) for important information.

SAVE THESE INSTRUCTIONS

Safety and Instructional Decals

Safety decals and instructions are easily visible to the operator and are located near any area of potential danger. Replace any decal that is damaged or missing.



g503870

161-6046

1. Do not dispose improperly

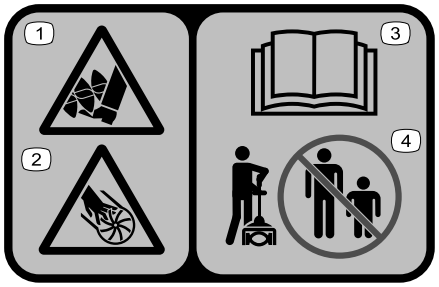

decal140-8464

140-8464

1. Cutting/dismemberment hazard of foot; auger
2. Cutting/dismemberment hazard of hand; impeller
3. Read the *Operator's Manual*.
4. Keep bystanders away.

Setup

Unfolding the Handle

1. Unfold the handle (A of Figure 4).
2. Align the locking button on the lower shaft with the slotted hole on the upper shaft and slide the 2 shafts together (B and C of Figure 4).

   Note: The locking button clicks into the slotted hole when the shafts are secured (D of Figure 4).
3. Using the provided Allen wrench, tighten the screw on the shaft connector until it is secure (E of Figure 4).

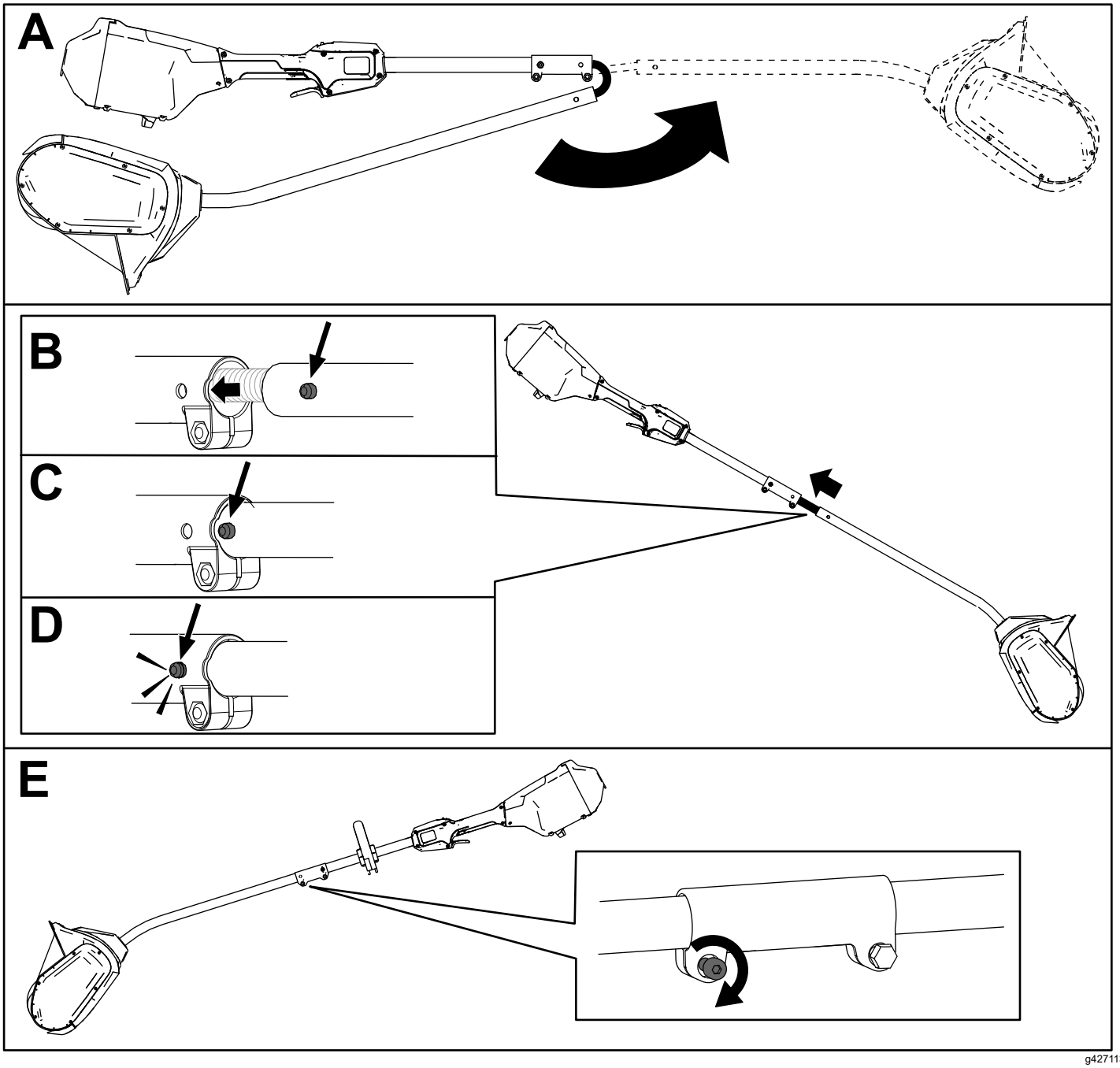

Figure 4

Installing the Auxiliary Handle

1. Separate the auxiliary handle from the handle plate by removing the 4 socket head screws using the provided Allen wrench (A of Figure 5).
2. Line up the auxiliary handle with auxiliary handle plate on the shaft (B of Figure 5).
3. Secure the auxiliary handle to the handle plate with the 4 socket head screws previously removed (C of Figure 5).

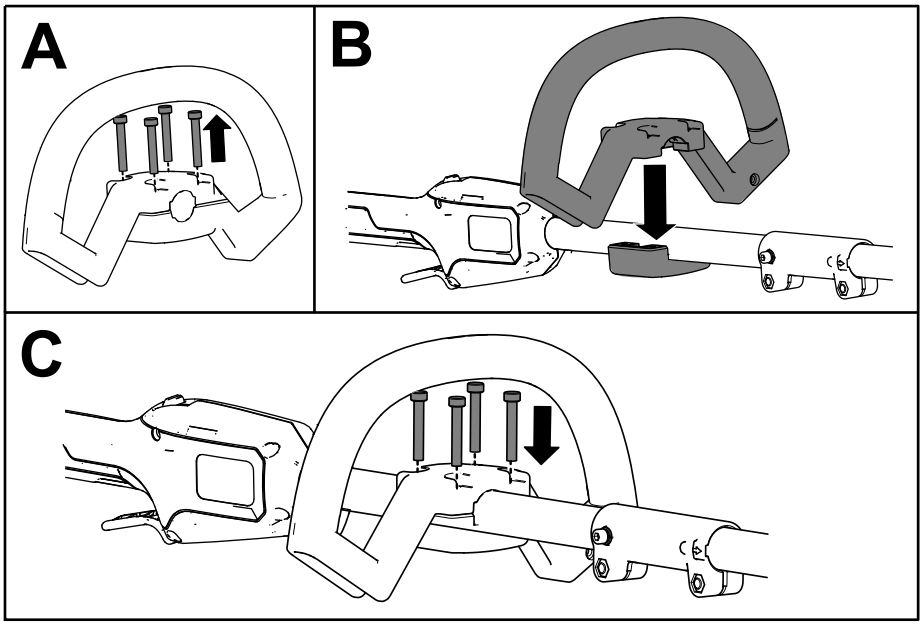

g427114

Figure 5

Product Overview

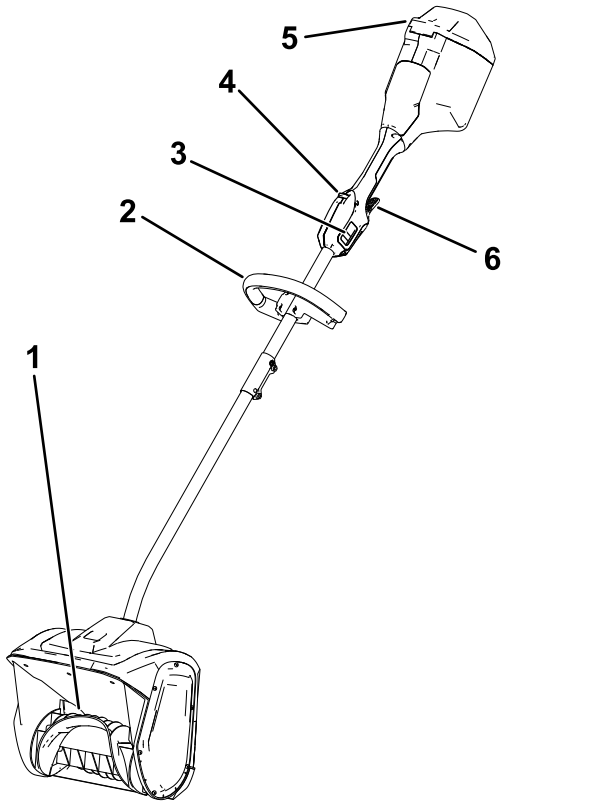

g427145

Figure 6

1. Rotor
2. Handle
3. 2-speed switch
4. Trigger lock
5. Battery lid
6. Run trigger

Specifications

Appropriate Temperature Ranges

Charge/store the battery pack at	5°C (41°F) to 40°C (104°F)*
Use the battery pack at	-30°C (-22°F) to 49°C (120°F)*
Use the machine at	-30°C (-22°F) to 49°C (120°F)*

*Charging time will increase if you do not charge the battery within this range.

Store the machine, battery pack, and battery charger in an enclosed clean, dry area.

Attachments/Accessories

A selection of Toro approved attachments and accessories is available for use with the machine to enhance and expand its capabilities. Contact your Authorized Service Dealer or authorized Toro distributor or go to www.Toro.com for a list of all approved attachments and accessories.

To ensure optimum performance and continued safety certification of the machine, use only genuine Toro replacement parts and accessories. Replacement parts and accessories made by other manufacturers could be dangerous.

Operation

Starting the Machine

1. Ensure that the vents on the back of the machine are clear of any snow or ice (Figure 7).

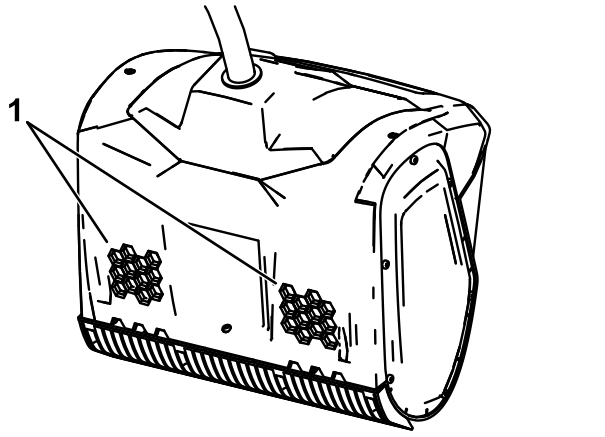

g316735

Figure 7

1. Air vents

2. Open the battery lid (Figure 8).
3. Align the cavity in the battery pack with the tongue in the battery compartment (Figure 8).
4. Push the battery pack into the battery compartment until the battery locks into the latch (Figure 8).

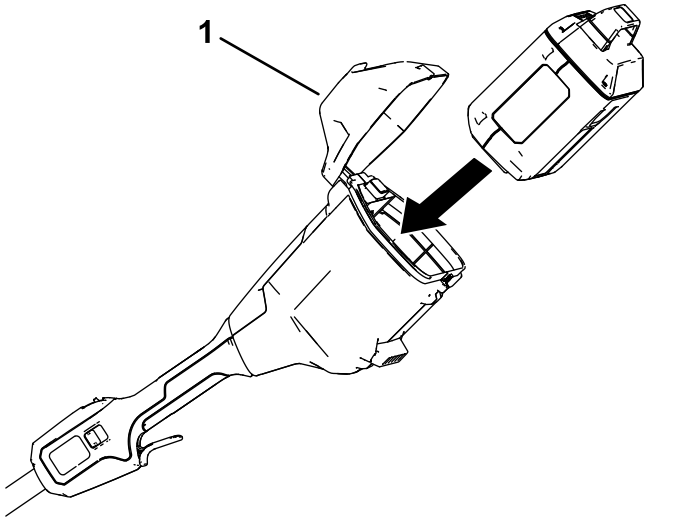

g427205

Figure 8

1. Battery lid

5. To start the machine, push the trigger lock, then squeeze the run trigger (Figure 9).

   Note: Slide the 2-speed switch to change the speed of the rotor.

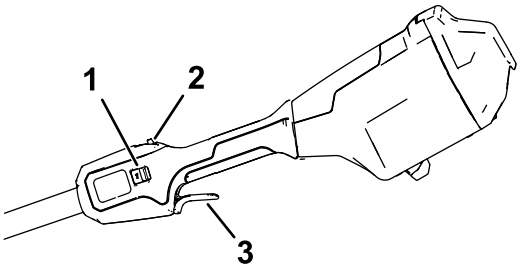

g427203

Figure 9

1. 2-speed switch
2. Trigger lock
3. Run trigger

6. Close the battery lid.

Shutting Off the Machine

To shut off the machine, release the run trigger.

Whenever you are not using the machine or are transporting the machine to or from the work area, remove the battery pack; refer to Removing the Battery Pack (page 11).

Removing the Battery Pack

Open the battery lid, press the battery latch to release the battery pack, and slide the battery pack out of the machine (Figure 10).

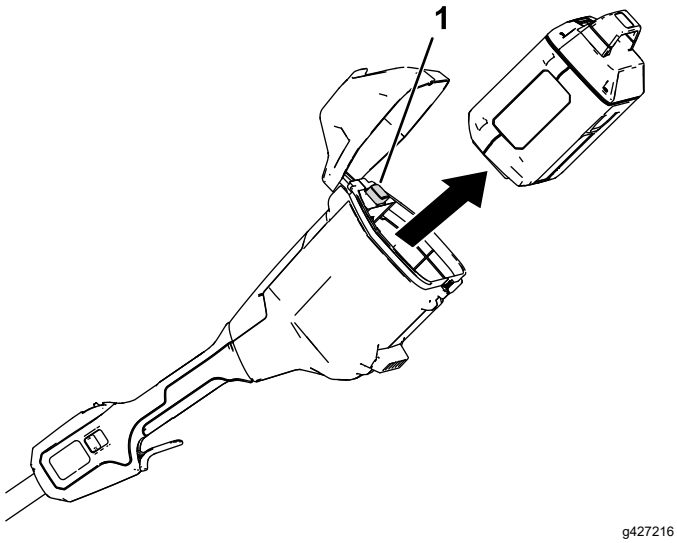

g427216

Figure 10

1. Battery latch

Operating Tips

- Start the machine and tilt it forward until the scraper blade contacts the ground. Push the machine forward at a comfortable rate of speed, yet slow enough to clear the path completely. The width and depth of the snow determines your forward speed.
- For the most efficient snow removal, throw the snow downwind, and slightly overlap each swath.
- The machine can remove snow up to 15 cm (6 inches) deep in one pass. When clearing deeper drifts, hold the machine by the upper and lower handles and use a swinging or sweeping motion. Remove a maximum of 15 cm (6 inches) with each pass and repeat as many times as required.

Maintenance

⚠ DANGER

Contact with the rotor can cause serious personal injury.

- **Remove the battery pack before adjusting or maintaining the machine.**
- **Always wear gloves when adjusting or maintaining the machine.**

Replacing the Scraper Blade

Service Interval: Every 20 hours

Remove the 4 screws securing the scraper blade and replace the scraper blade as necessary.

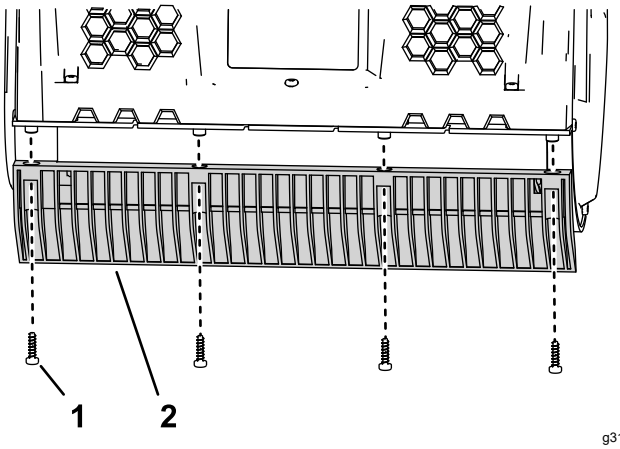

Figure 11

1. Screw
2. Scraper blade

Service

Should the machine need service, take it to your Authorized Service Dealer.

Storage

Important: **Store the machine, battery pack, and charger only in temperatures that are within the appropriate range; refer to Specifications (page 9).**

Important: **If you are storing the machine for a year or longer, remove the battery pack from the machine and charge the battery pack until 1 or 2 LED indicators turn green on the battery. Do not store a fully charged or fully depleted battery. When you are ready to use the machine again, charge the battery pack until the left indicator light turns green on the charger or all 4 LED indicators turn green on the battery.**

- Disconnect the machine from the power supply (i.e., remove the battery pack) and check for damage after use.
- Clean all foreign material from the machine.
- Do not store the machine or charger with the battery pack installed.
- When not in use, store the machine, battery pack, and battery charger out of the reach of children.
- Keep the machine, battery pack, and battery charger away from corrosive agents such as garden chemicals and de-icing salts.
- To reduce the risk of serious personal injury, do not store the battery pack outside or in vehicles.
- Store the machine, battery pack, and battery charger in an enclosed clean, dry area.

Troubleshooting

Perform only the steps described in these instructions. All further inspection, maintenance, and repair work must be performed by an authorized service center or a similarly qualified specialist if you cannot solve the problem yourself.

Always remove the battery from the tool when troubleshooting, inspecting, maintaining, or cleaning the tool.

Problem	Possible Cause	Corrective Action
The machine does not run or does not run continuously.	1. The battery is not fully installed in the machine.	1. Remove and then replace the battery into the machine, making sure that it is fully installed and latched.
	2. The battery pack is not charged.	2. Remove the battery pack from the machine and charge it.
	3. The battery pack is damaged.	3. Replace the battery pack.
	4. There is another electrical problem with the machine.	4. Contact an Authorized Service Dealer.
The machine does not reach full power.	1. The battery pack charge capacity is too low.	1. Remove the battery pack from the machine and fully charge the battery pack.
	2. The air vents are blocked.	2. Clean the air vents.
The machine is producing excessive vibration or noise.	1. The rotor is damaged.	1. Contact an Authorized Service Dealer.
The battery pack loses charge quickly.	1. The battery pack is over or under the appropriate temperature range.	1. Move the battery pack to a place where it is dry and the temperature is between 5°C (41°F) and 40°C (104°F).
	2. The machine is overloaded	2. Work at a slower pace.

Notes:

Notes:



Count on it.