Form No. 3351–628

High Air Intake Kit

Workman Vehicle w/Serial Numbers 240000001 & Up

Part No. 107–8003

Installation Instructions

1. Raise bed.

2. Stop engine, set parking brake and remove key from ignition switch.

3. Install safety support on fully extended lift cylinder rod (if so equipped).

4. If no holes are present in the top of the ROPS cover, use the dimensions shown in figure 1 to locate, mark and drill (2) .328” dia. holes in the top of the ROPS cover. Center holes (front to back) on top of cover.

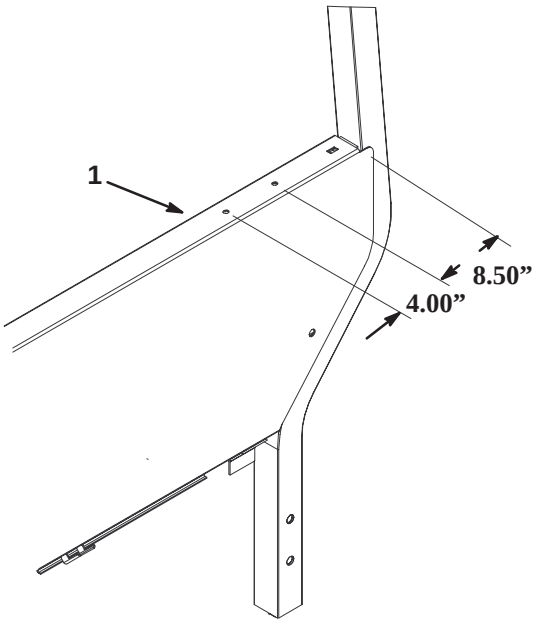

Figure 1

1. ROPS cover

5. Remove air inlet hood from air cleaner (Fig. 2). Discard the short hose but retain the (2) hose clamps.

6. Loosely assemble the high air intake tube to the new air intake hose with one of the hose clamps previously removed. Position the clamp so the screw faces the center of the vehicle.

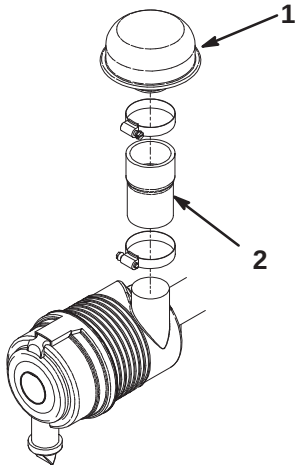

Figure 2

1. Air inlet hood
2. Short hose

7. Remove the 5/16 carriage bolt and nut securing the lower right rear corner of the ROPS cover to the ROPS (Fig. 3).

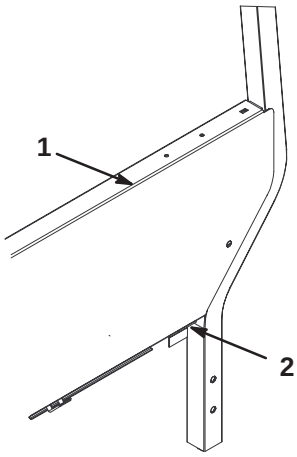

Figure 3

1. ROPS cover
2. Carriage bolt & nut

8. Loosely mount the lower bracket of the high air intake tube to the ROPS cover and ROPS with the 5/16 carriage bolt and nut previously removed (Fig. 4).

© 2004 by The Toro Company
8111 Lyndale Avenue South
Bloomington, MN 55420-1196

All Rights Reserved
Printed in the USA

9. Loosely mount the upper bracket of the high air intake tube to the ROPS cover with (2) 5/16 flange head screws and nuts (Fig. 4).

10. Mount the rear end of the air intake hose to the air cleaner with one of the hose clamps previously removed (Fig. 4).

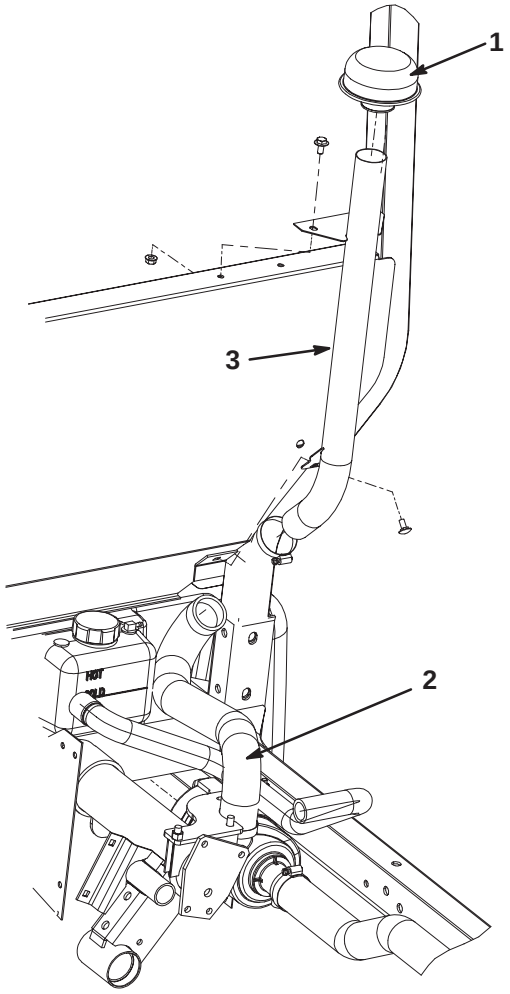

Figure 4

1. Air inlet hood
2. Air intake hose
3. High air intake tube

---

11. Tighten all fasteners.

12. Install the inlet hood to the high air intake tube by gently tapping it on (Fig. 4).