Form No. 3327-362 Rev A

Light Kit
Greensmaster® 3050 and 3100
Part No. 105-3848

Installation Instructions

Preparing the Traction Unit

Caution

If you leave the key in the ignition switch, someone could accidently start the engine and seriously injure you or other bystanders.

Remove the key from the ignition and disconnect the wire(s) from the spark plug(s) before you do any maintenance. Set the wire(s) aside so that it does not accidentally contact the spark plug(s).

1. Disconnect the negative (–) battery cable from the battery.
2. Remove the left cover plate (Fig. 1).

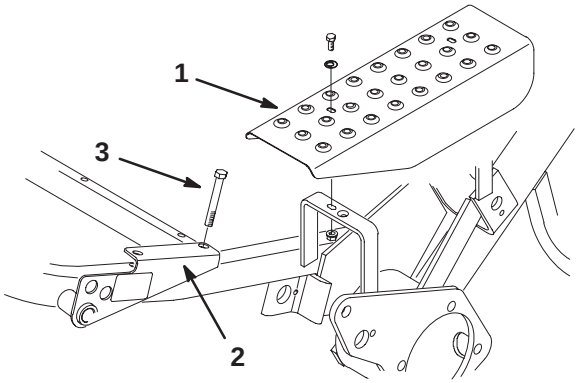

Figure 1

1. Left cover plate
2. Lockout bracket
3. Rear bolt

3. Remove and discard the rear bolt securing the lockout bracket to the frame (Fig. 1). Save the washer and locknut.
4. Remove the cover shield from the side of the control panel (Fig. 2).

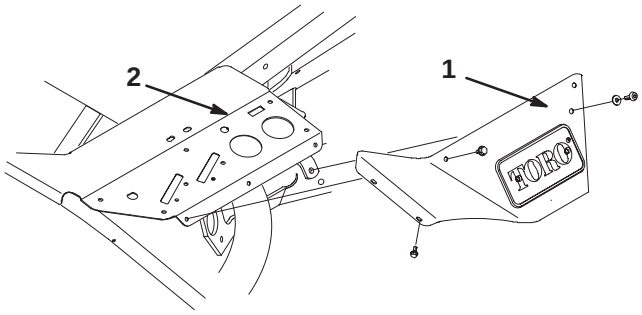

Figure 2

1. Cover shield
2. Control panel

Installing the Light Switch (Greensmaster 3050 only)

1. Remove the plastic plug from the control panel (Fig. 3).

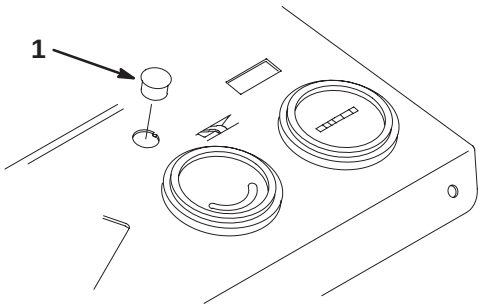

Figure 3

1. Plastic plug

© 2004—The Toro Company
8111 Lyndale Ave., Bloomington, MN 55420, USA

Printed in the USA
All Rights Reserved

Original Instructions (EN)
Register your product at www.Toro.com

2. Install the light switch into the control panel, securing it with 2 nuts and a lockwasher (Fig. 4).

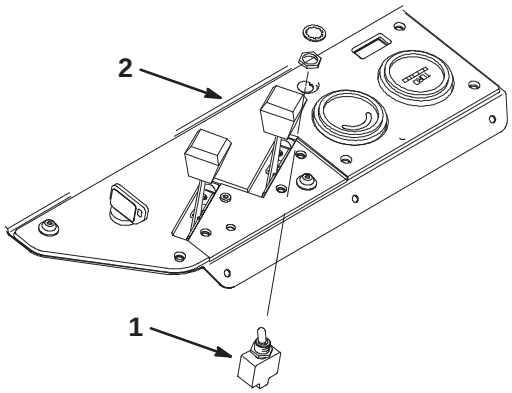

Figure 4

1. Light switch
2. Control panel

3. Under the control panel, locate a blue wire with a clear protective covering over the terminal that is not connected to anything and remove the protective covering.

4. Connect the blue wire to one of the two leads on the light switch.

Installing the Lights

1. Mark and drill 2 holes (11/32 in. dia.) through both walls of the mow pedal guard at the locations indicated in Figure 5.

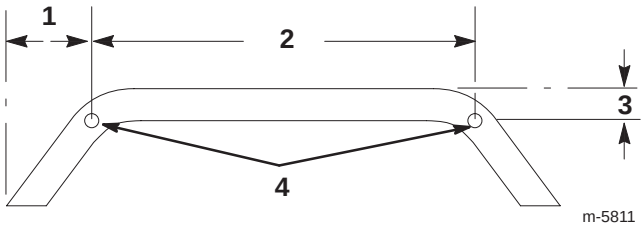

Figure 5

1. 3-1/2 in. (8.9 cm)
2. 10 in. (25.4 cm)
3. 1 in. (2.5 cm)
4. Drill holes (11/32 in. dia.)

2. Route the wire harness through the tubular light bracket so that the connectors on the harness for the lights are on either end of the bracket (Fig. 6).

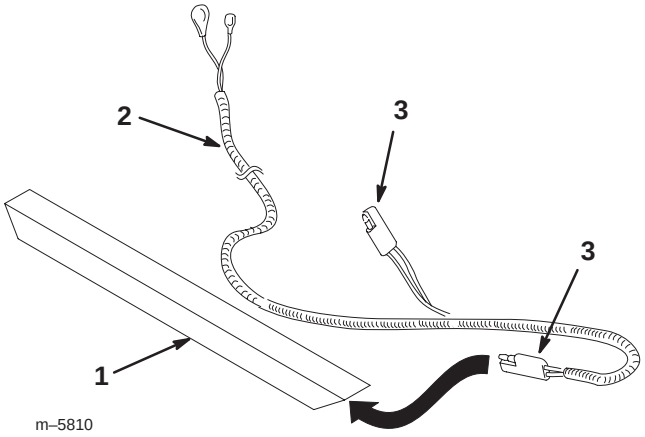

Figure 6

1. Tubular light bracket
2. Wire harness
3. Connectors

3. Install the light bracket to the front of the mow pedal guard (Fig. 7), using 2 bolts (5/16 x 2-1/2 in.) and nuts (5/16 in.).

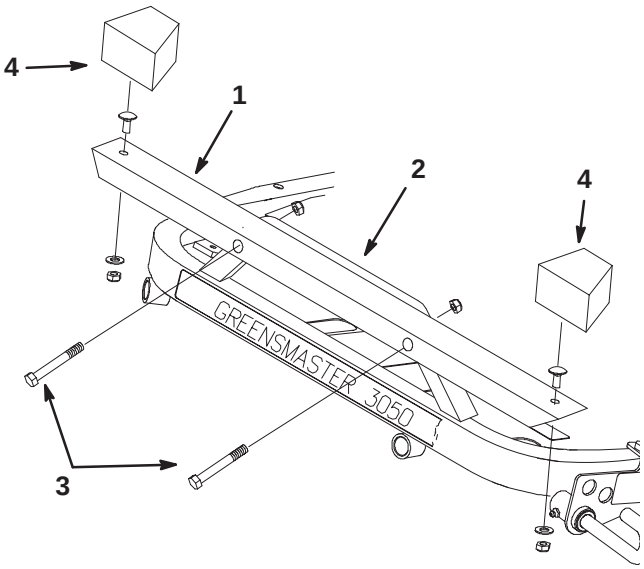

Figure 7

1. Tubular light bracket
2. Mow pedal guard
3. Bolts, 5/16 x 2-1/2 in.
4. Light assemblies

4. Loosely mount a light to each end of the tubular bracket with a lockwasher and nut (Fig. 7).

5. Loosely install an R-clamp, bolt (3/8 x 3 in.), and washer in the rear hole of the lockout bracket using the hardware you removed previously (Fig. 8).

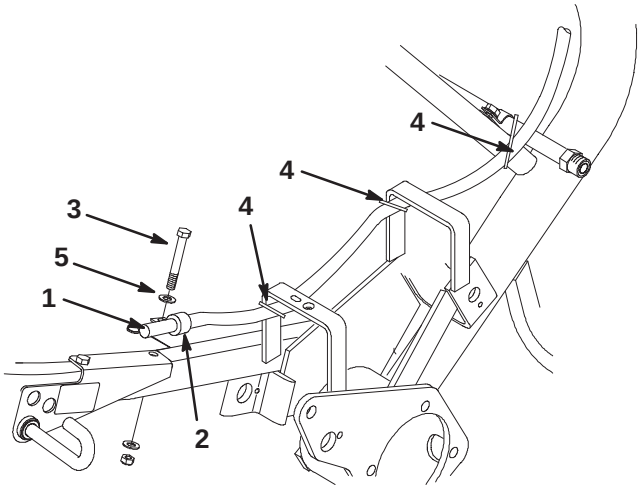

Figure 8

1. Wire harness
2. R-clamp
3. Bolt, 3/8 x 3 in.
4. Cable tie
5. Washer

6. Route the harness through the R-clamp, under the left cover plate and up under the control panel (Fig. 8).

7. Tighten the R-clamp bolt and secure the harness to the frame using cable ties as needed (Fig. 8).

8. Connect the orange wire of the harness to the open terminal on the light switch.

9. Connect the black wire to the ground bolt on the frame (Fig. 9).

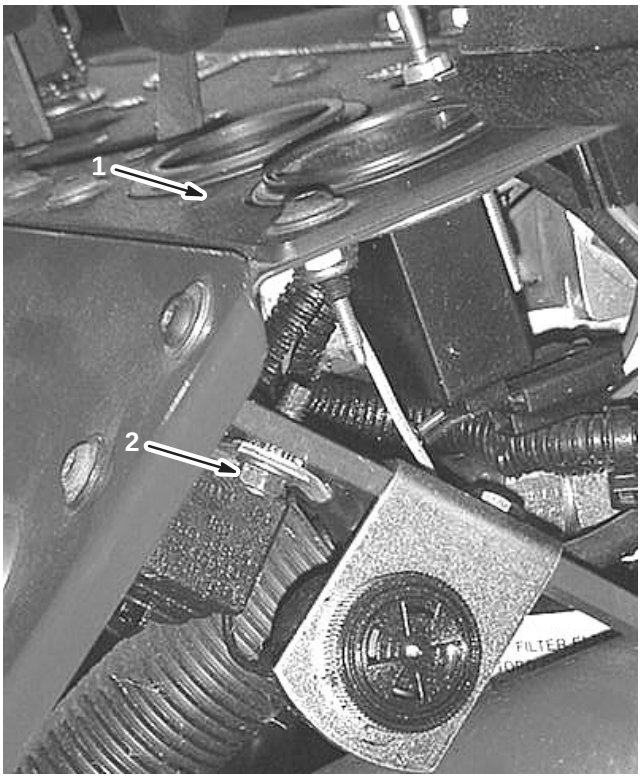

Figure 9

1. Control panel
2. Ground bolt

10. Connect the harness to the connectors on both lights.

11. Install all removed covers and plates.

12. Connect the negative (–) battery cable to the battery.

13. Turn on the lights.

14. Aim the lights as desired and then tighten the mounting nuts to secure them in the desired positions.

Note: Use the lights only while the engine is operating at or near maximum speed in order to keep the battery charged.


TORO®