Form No. 3351–148 Rev A

Z500 Series Z Master® Mowers

Setup Instructions

Loose Parts

Use the chart below to verify all parts have been shipped.

Step	Description	Qty.	Use
1	No parts needed	–	Raising the machine up
2	Roll bar, right section Roll bar, left section Roll bar, center section Bolt, 3/8 x 4–1/2 inches Bolt, 3/8 x 1 inch Curved washer Flange nut, 3/8 inch Bolt, 1/2 x 3-1/4 inches Flange nut, 1/2 inch Lock nut, 3/8 inch Lanyard	1 1 1 2 4 8 6 2 2 2 2	Installing the roll over protection system (ROPS)
3	Wheels	2	Installing the drive wheels
4	No parts needed	–	Checking the tire pressure
5	Control lever–right Control lever–left Bolt, 3/8 x 1 inch Curved washer, 3/8 inch	1 1 4 4	Installing the motion control levers
6	Seat Nuts (installed on the seat)	1 4	Installing the seat
7	Bulk electrolyte with 1.265 specific gravity (Purchase from a battery supply outlet.)	1 US Gallon	Activating the battery
8	Air cleaner Hose clamp	1 1	Installing the air cleaner on Kohler® engines
9	Air cleaner Hose clamp	1 1	Installing the air cleaner on 25hp Kawasaki® engines
10	Number 2 general purpose lithium base or molybdenum base grease. (Purchase separately.)	1 tube	Greasing the bearings
11	No parts needed	–	Preparing the side discharge chute

© 2003—The Toro Company
8111 Lyndale Ave., Blomington, MN 55420, USA
Printed in the USA
All Rights Reserved
Original Instructions (EN)
Register your product at www.Toro.com

Step	Description	Qty.	Use
12	No parts needed.	–	Checking the machine before delivery
13	Key *Operator's Manual* *Engine Owner's Manual* *Parts Catalog* Safety video Registration card	2 1 1 1 1 1	Delivering the Machine to the Customer

Step 1

Raising the Machine Up

Parts needed for this step:

None

Procedure

1. Remove the wheel nuts from both sides of the vehicle.

2. Remove the right angle retaining plate from the crate and the wheel hub.

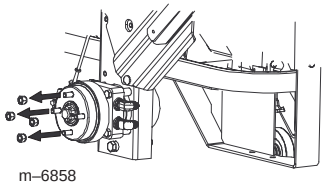
m–6858

3. Raise the back of the machine up and support it with jack-stands.

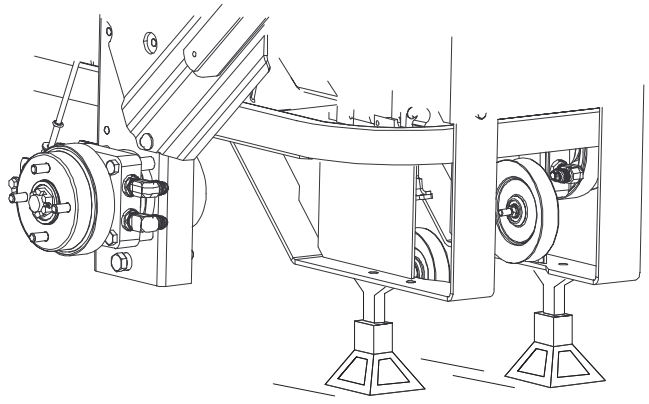

Step 2

Installing the Roll Over Protection System (ROPS)

Parts needed for this step:

Qty.	Part
1	Roll bar, right section
1	Roll bar, left section
1	Roll bar, center section
2	Bolt, 3/8 x 4–1/2 inches
2	Lock nut, 3/8 inch
4	Bolt, 3/8 x 1 inch
8	Curved washer
6	Flange nut, 3/8 inch
2	Bolt, 1/2 x 3-1/4 inches
2	Flange nut, 1/2 inch

Procedure

1. Remove and discard the fuel tank mounting bolt and nut from under the tank on each side.

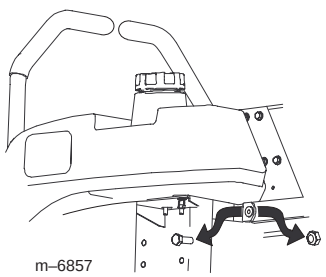
m–6857

2. For an air cooled machine, loosen the two bottom bolts in the rear bumper.

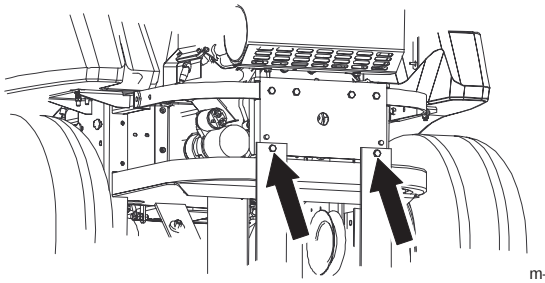

m–6886

3. For a liquid cooled machine, loosen the two side and four back bolts in the rear bumper.

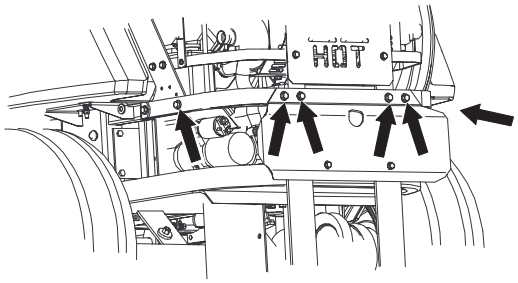

m–6885

Note: Step 4 is needed for international mowers only.

4. For internationl mowers, remove the bolts, washers and nuts holding the rubber flap in front of the motor.

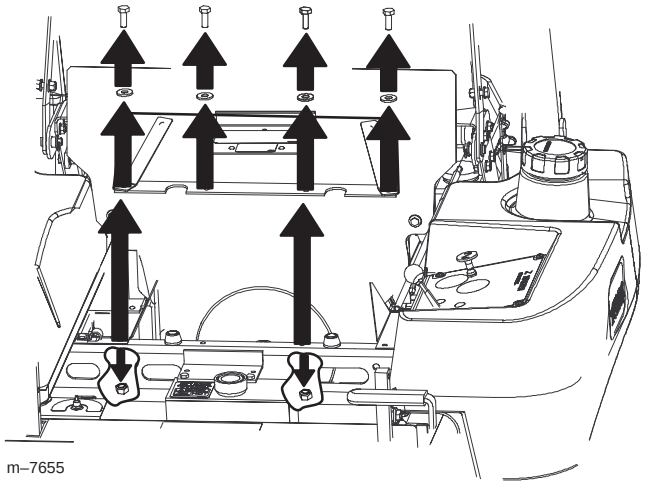

m–7655

5. Install the bolts in the order shown in the figure below.

6. **Loosely** install the right and left roll bar sections to the frame, in numbered order as follows:

1. Lock nut (3/8 inch), curved washer
2. Bolt (3/8 x 1 inch), curved washer, and flange nut (3/8 inch)
3. Bolt (3/8 x 1 inch), curved washer, and flange nut (3/8 inch)
4. Bolt (3/8 x 4-1/2 inches), curved washer, and flange nut (3/8 inch)

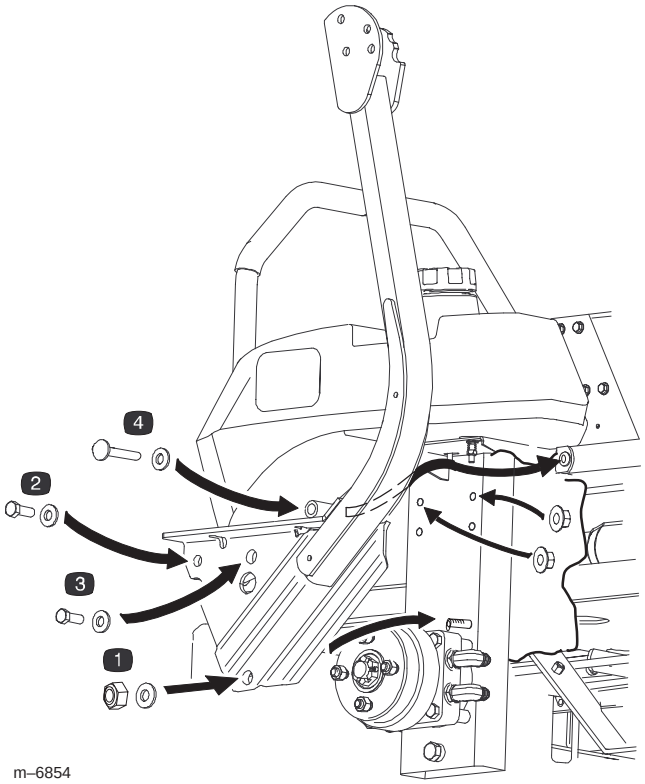

m–6854

7. Install the lanyard clips onto the 2 bolts (1/2 x 3-1/4 inches).

Note: Make sure the bent tab points toward the head of the bolt.

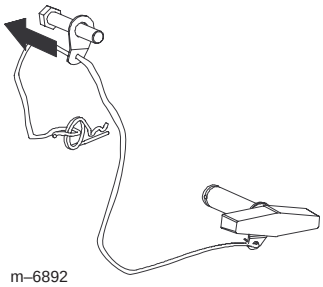

m–6892

8. Lightly oil the ends of the center roll bar section.

9. Loosely install the center roll bar section, using 2 bolts (1/2 x 3-1/4 inches) and 2 flange nuts (1/2 inch).

Note: Make sure the bolts are installed on the outside of the roll bar.

Note: Make sure the lanyard tab is install as shown and points forward.

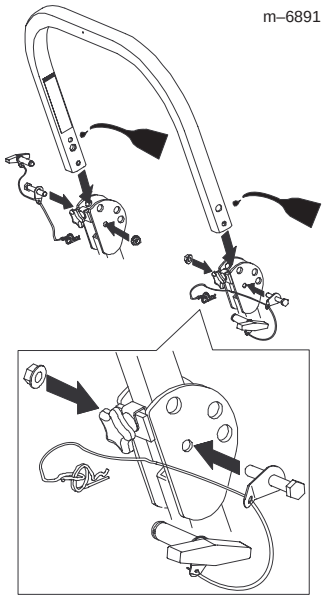

10. Raise the roll bar into the upright position and secure it with the pins and hairpin cotter pins fastened to the lanyards.

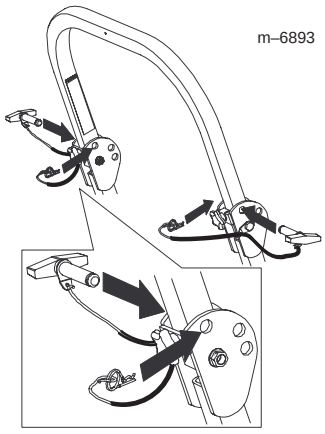

11. Tighten the center roll bar bolts (1/2 x 3-1/4 inches) so it rotates freely with some resistance.

Note: No more than one thread should be exposed outside the nut.

12. Torque all lower fasteners, attached to the machine frame, to 30 ft–lb.

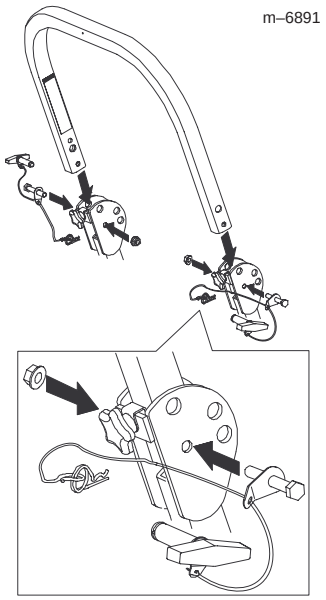

13. Tighten the front handles against the center roll bar ends.

14. Tighten the rear bumper bolts.

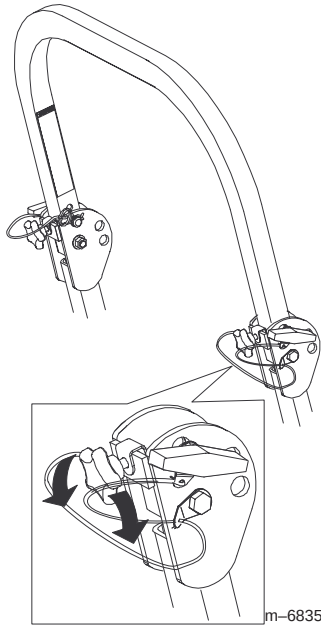

Note: Step 15 is needed for international mowers only.

15. For internationl mowers, install the rubber flap with the previously removed bolts, washers and nuts.

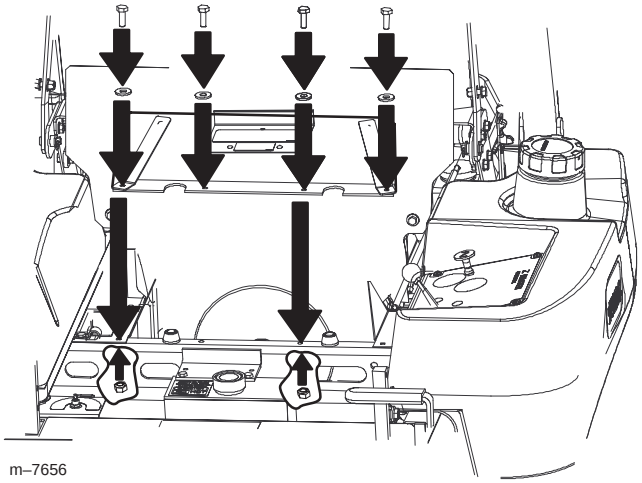

m–7656

Step
3

Installing the Drive Wheels

Parts needed for this step:

Qty.	Part
2	Rear wheels

Procedure

1. Mount the wheels with the valve stem to the outside and secure them with the nuts previously removed in Step 1.

2. Torque the nuts to 95 ft-lb (128 N·m).

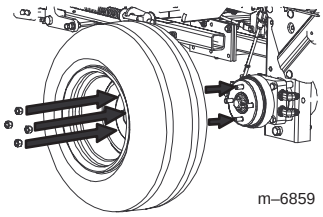

m–6859

Step
4

Checking the Tire Pressure

Parts needed for this step:

None

Procedure

Check the air pressure in the front and rear tires.

Pressure: 13 psi (90 kPa)

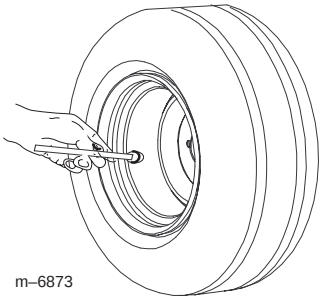

m–6873

Step
5

Installing the Motion Control Levers

Parts needed for this step:

Qty.	Part
1	Control lever–right
1	Control lever–left
4	Bolt, 3/8 x 1 inch (2 assembled)
4	Curved washer, 3/8 inch (2 assembled)

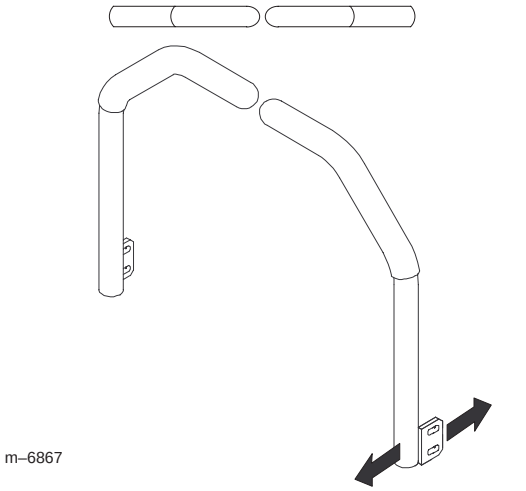
m–6867

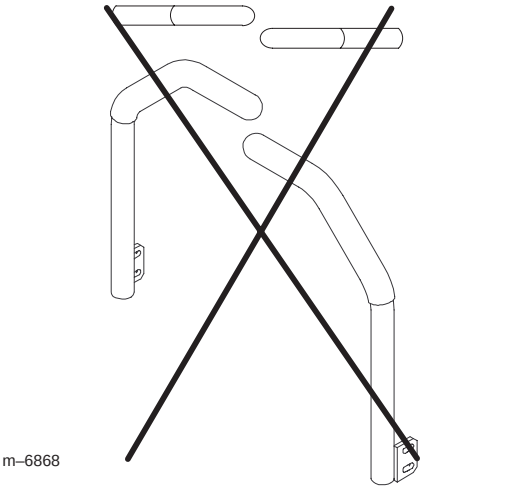
m–6868

Procedure

1. Rotate the handles to the upright position.

2. Loosely install the levers on the outside, using 4 bolts and curved washers.

Note: Install the levers in the top and middle holes for the high position or the middle and bottom holes for the low position, as desired.

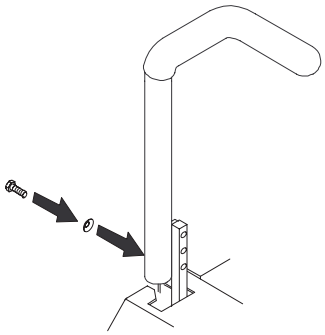
m–6866

3. In the neutral position, raise the levers, bringing them together, and slide them until they are aligned, then tighten the bolts.

Step
6

Installing the Seat

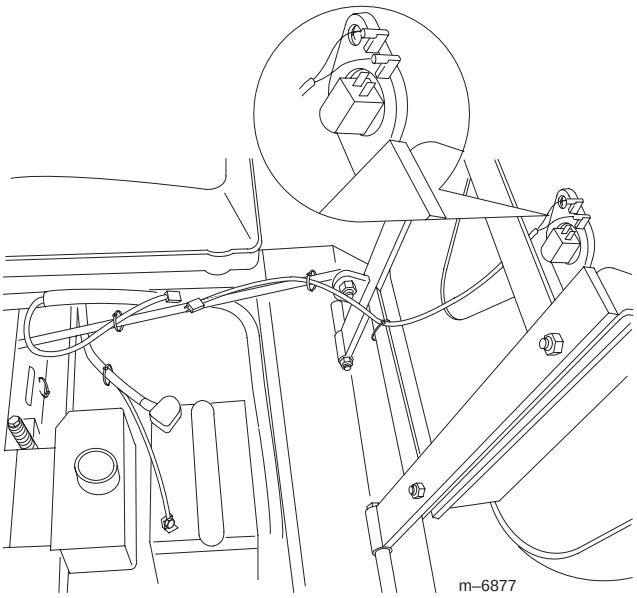
m–6877

Parts needed for this step:

Qty.	Part
1	Seat
4	Flange nuts (installed on the seat)

Procedure

1. Remove the seat from the crate.

2. Remove the 4 flange nuts from the studs on the bottom of the seat.

3. Position the seat into the holes in the seat frame.

4. Secure the seat with 4 flange nuts.

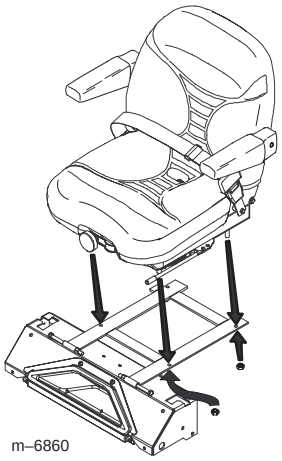
m–6860

5. If needed, attach the two connectors onto the seat switch.

Step
7

Activating the Battery

Parts needed for this step:

Qty.	Part
80 ounces	Bulk electrolyte with 1.265 specific gravity (Purchase from a battery supply outlet.)

Procedure

Danger

Battery electrolyte contains sulfuric acid which is a deadly poison and causes severe burns.

- **Do not drink electrolyte and avoid contact with skin, eyes or clothing. Wear safety glasses to shield your eyes and rubber gloves to protect your hands.**
- **Fill the battery where clean water is always available for flushing the skin.**
- **Follow all instructions and comply with all safety messages on the electrolyte container.**

Warning

CALIFORNIA

Proposition 65 Warning

Battery posts, terminals, and related accessories contain lead and lead compounds, chemicals known to the State of California to cause cancer and reproductive harm. *Wash hands after handling.*

1. Remove the battery. Refer to the *Operator's Manual* for instructions.

Important: Do not add electrolyte while the battery is in the machine. You could spill it, causing corrosion.

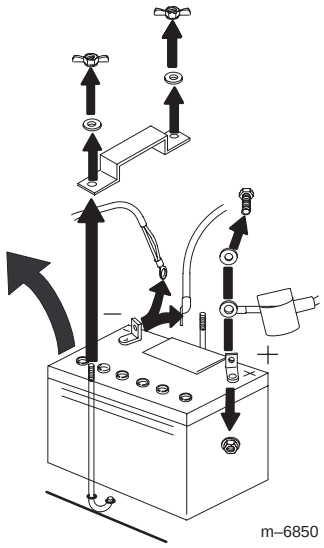
m–6850

2. Clean the top of the battery and remove the vent caps.

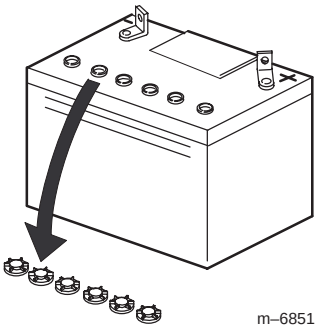
m–6851

3. Slowly pour electrolyte into each battery cell until the level is up to the **upper** line on the battery case.

Important: Do not overfill the battery.

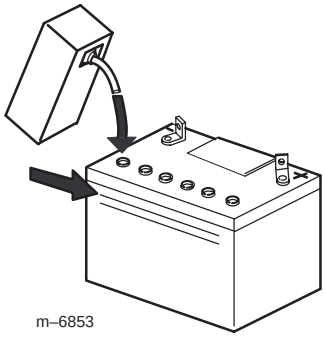
m–6853

4. Wait five to ten minutes, then add electrolyte, if necessary, until the electrolyte level is up to the **upper** line on the battery case.

5. Install battery filler caps.

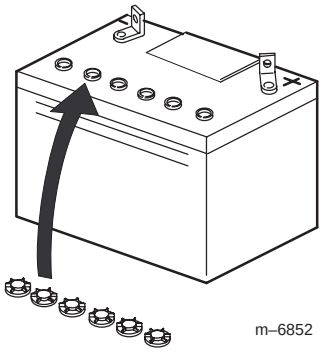
m–6852

6. Charge the battery and then install it on the machine. Refer to the *Operator's Manual* for instructions.

Warning

Charging the battery produces gasses that can explode and cause serious injury.

- **Keep cigarettes, sparks and flames away from the battery.**
- **Make sure the ignition switch is off.**
- **Ventilate when charging or using the battery in an enclosed space.**

Important: Do not run the machine with the battery disconnected; electrical damage may occur to the engine computer.

Important: Do not jump start an EFI machine, or you may damage the electronic control unit.

Step 8

Installing the Air Cleaner on Kohler Engines

Parts needed for this step:

Qty.	Part
1	Air cleaner
1	Hose clamp

Procedure

1. Remove the air cleaner from the crate, keeping the bracket together with it.

2. Remove the top 2 valve cover mounting bolts from both valve covers.

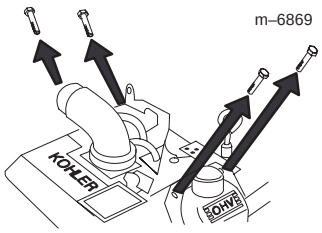

3. Remove the plastic plugs.

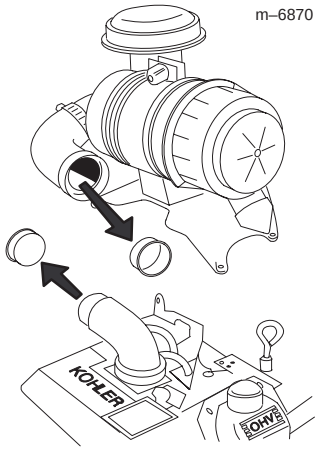

4. Align the holes in the air cleaner bracket with holes in the valve covers.

5. Secure the bracket and valve covers with the 4 bolts removed previously.

6. Torque the bolts to 70 in-lb (5 N·m).

7. Install the air cleaner hose over the air intake elbow on the engine and secure it with a hose clamp.

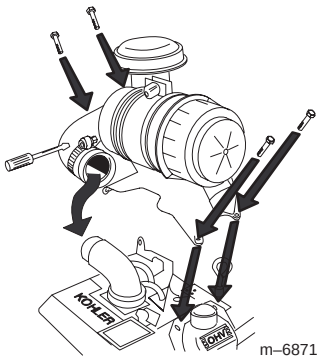

Step
9

Installing the Air Cleaner on 25hp Kawasaki Engines

Parts needed for this step:

Qty.	Part
1	Air cleaner
1	Hose clamp

Procedure

1. Remove the air cleaner from the crate, keeping the bracket together with it.

2. Remove the 4 screws holding the front plastic cover on the front of the engine.

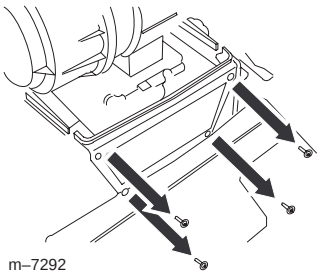
m–7292

3. Remove the plastic plug.

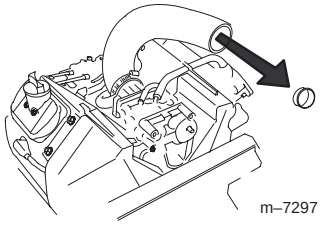
m–7297

4. Remove the 2 bolts from the back of the engine.

5. Remove the 2 long bolts that run through the carborateur.

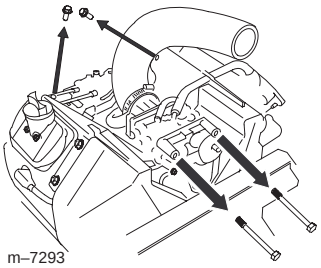
m–7293

6. Install the hose into the air cleaner base.

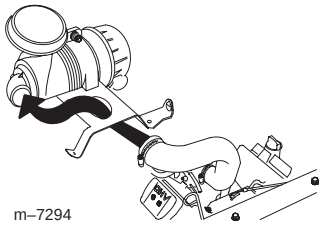
m–7294

7. Align the holes in the air cleaner bracket with holes in the valve covers.

8. Install the long carburetor bolts into the air cleaner base and into the carburetor.

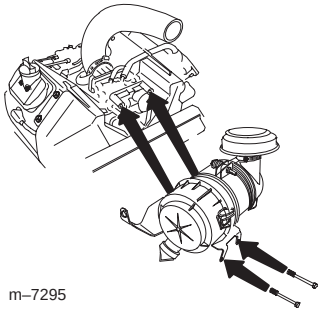
m–7295

9. Install the hose clamp onto the hose and install the hose to the air cleaner.

10. Install the bolts into the back of the air cleaner bracket and into the motor.

11. Tighten the hose clamps.

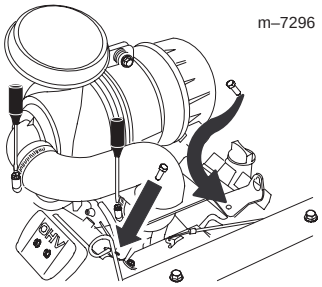
m–7296

Step
10

Checking the Spindles for Grease

Parts needed for this step:

Qty.	Part
1 tube	Number 2 general purpose lithium base or molybdenum base grease. (Purchase separately.)

Procedure

Important: Check the **cutting unit spindles to make sure they are greased** before starting the engine.

1. Remove the belt covers.

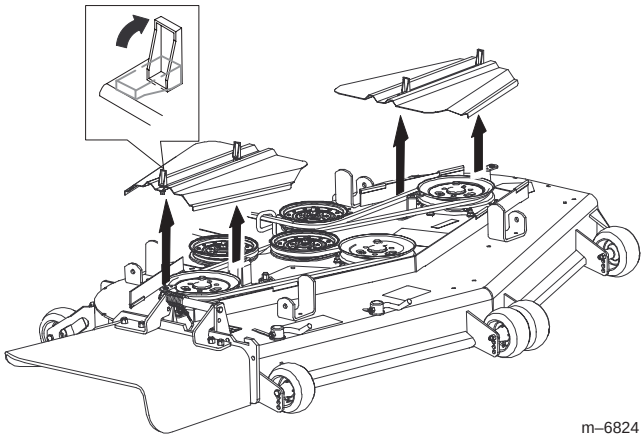

m–6824

2. Grease the fittings on the three spindle bearings. Add grease until it comes out of the lower seals.

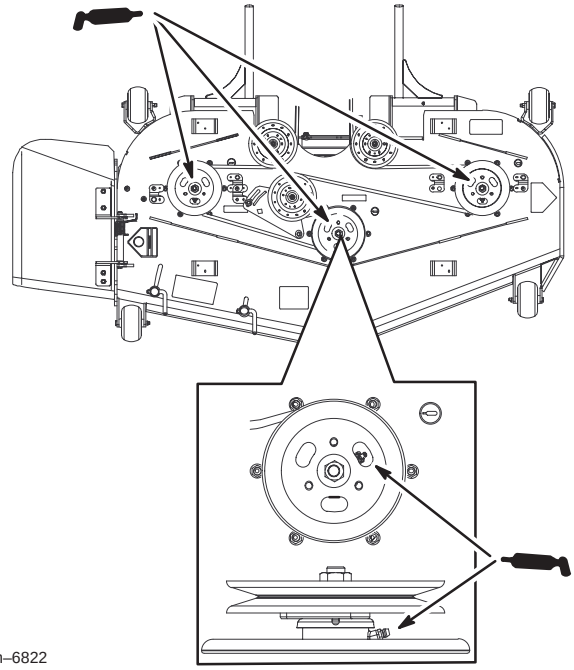

m–6822

3. Install the belt covers.

Step
11

Preparing the Side Discharge Chute

Parts needed for this step:

None

Procedure

Remove the plastic tie holding the side discharge chute up and lower the chute into place.

Step
12

Checking the Machine Before Delivery to the Customer

Parts needed for this step:

None

Procedure

Before delivering the machine to the customer, ensure that you perform or have performed the procedures listed in the following table and initial each when finished. Refer to the *Operator's Manual* for instructions on performing these procedures.

Initial	Check Procedure
	Check the tire pressure
	Check the level of the mower.
	Check that all mower spindles are greased.
	Check the engine oil level.
	Check the hydraulic fluid level.
	On liquid cooled machines, check the level of the coolant in the radiator.
	Check the adjustment of the parking brake.
	Ensure that the machine tracks correctly; refer to the *Operator's Manual* for the adjustment procedure.
	Check the safety interlock system; refer to the *Operator's Manual*.
	Ensure that the PTO works.
	Check all fasteners you installed to ensure that they are tight.

When you finish setting up the machine, sign and date in the space provided below:

Signature: _____ **Date:** _____

Step
13

Delivering the Machine to the Customer

Parts needed for this step:

Qty.	Part
1	*Operator's Manual*
1	*Parts Catalog*
1	*Engine Owner's Manual*
1	Registration card
1	Safety video
2	Key

Procedure

At delivery, complete the items listed in the following table and initial each when finished.

Model Number: _____ **Serial Number:** _____

Dealer Initial	Customer Initial	Check Procedure
		Show the customer where the following features are located and how they function: • Fuel Tank Caps • Oil Fill Tube/ Oil dipstick • Oil Filter • Oil Drain • Spark Plug(s) • Air Filter • Radiator Coolant (Liquid Cooled Only) • Hydraulic fluid reservoir • Hydraulic filter • Battery • Ignition Switch • Throttle Lever • Choke (Not on an EFI machine) • Power Take Off Switch (PTO) • Motion Control Levers • Parking Brake • Mower Height–of–Cut Lever • Lift Assist Lever • Z Stand® • Adjustable Seat • Hydraulic Bypass • Rollover Protection System (ROPS) • Flow Baffle
		Refer to the operator's manual to point out safety procedures, operation, and maintenance procedures.
		Review the warranty statement as shown in the *Operator's Manual*.
		Describe the post sale service procedures for your store.
		Assist the customer in filling out and mailing the registration card or register online at www.Toro.com.
		Make sure that the customer receives the *Operator's Manual*, *Parts Catalog*, and *Engine Owner's Manual, Set Up Instructions*, and safety video.
		Assist the customer in loading the mower.

Note: When you, the dealer representative, have finished delivering the machine to the customer, sign and date in the space provided below and keep a copy of this page for dealer records:

Signature: _____ **Date:** _____

Signature: _____ **Date:** _____


TORO®