Pull Frame Roller

Greensmaster 3050 or 3100 series 2-Wheel Drive Greensmower

Model No. 140-5542

Installation Instructions

Preparing the Machine

1. Park the machine on a level surface.
2. Shut off the engine.
3. Engage the parking brake.
4. Wait for all moving parts to stop and allow the engine to cool.

Installing the Kit

For the machines listed in the table below that also have cutting unit accessory 106-2643 installed, you will need to order 2 of part 138-4974.

Description	Model	Serial Range
Greensmaster 3050	04351 with 106-2643	All
Greensmaster 3100	04356 with 106-2643	All
Greensmaster 3120	04355 with 106-2643	Up to 401320000
Greensmaster 3150	04357 with 106-2643	All
Greensmaster 3150	04358 with 106-2643	Up to 401378000

© 2026—The Toro® Company
8111 Lyndale Ave So
Bloomington, MN 55044

Register at
www.Toro.com

Original Instructions (EN)
Printed in the USA
All rights reserved

3482-835

1. Remove the existing roller.

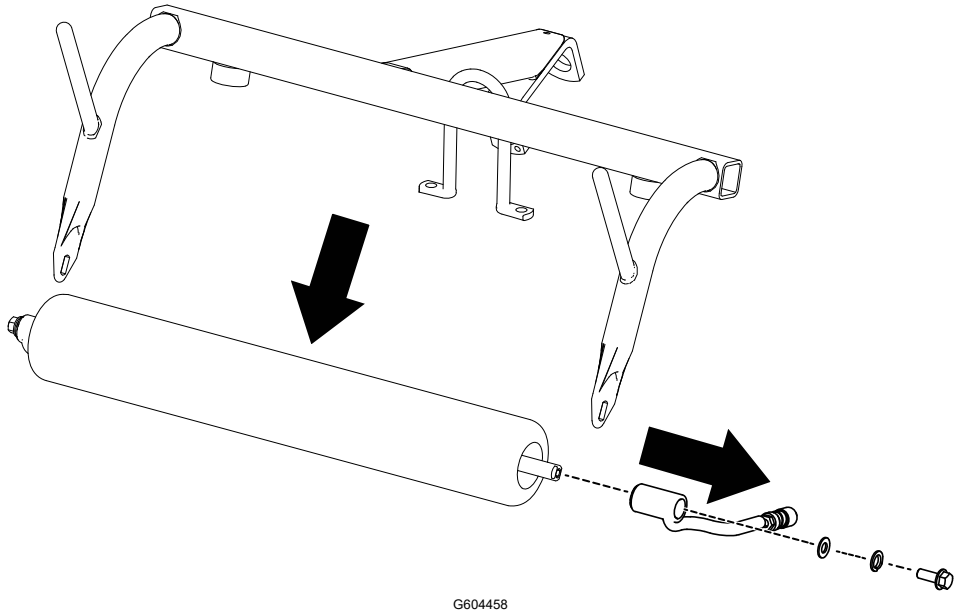

G604458

2. Install the new roller on all 3 cutting units.

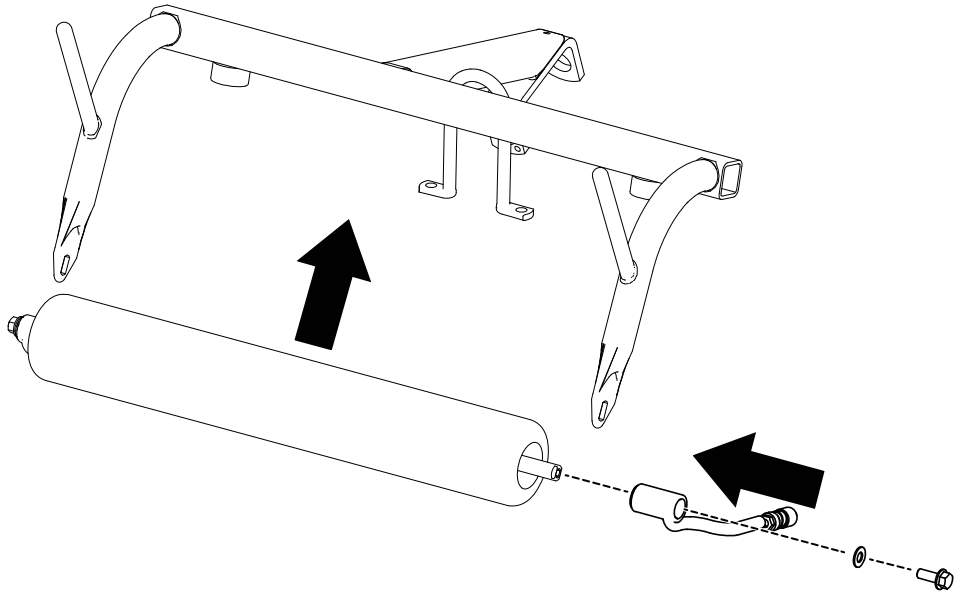

G604457

For machines listed in the table above:

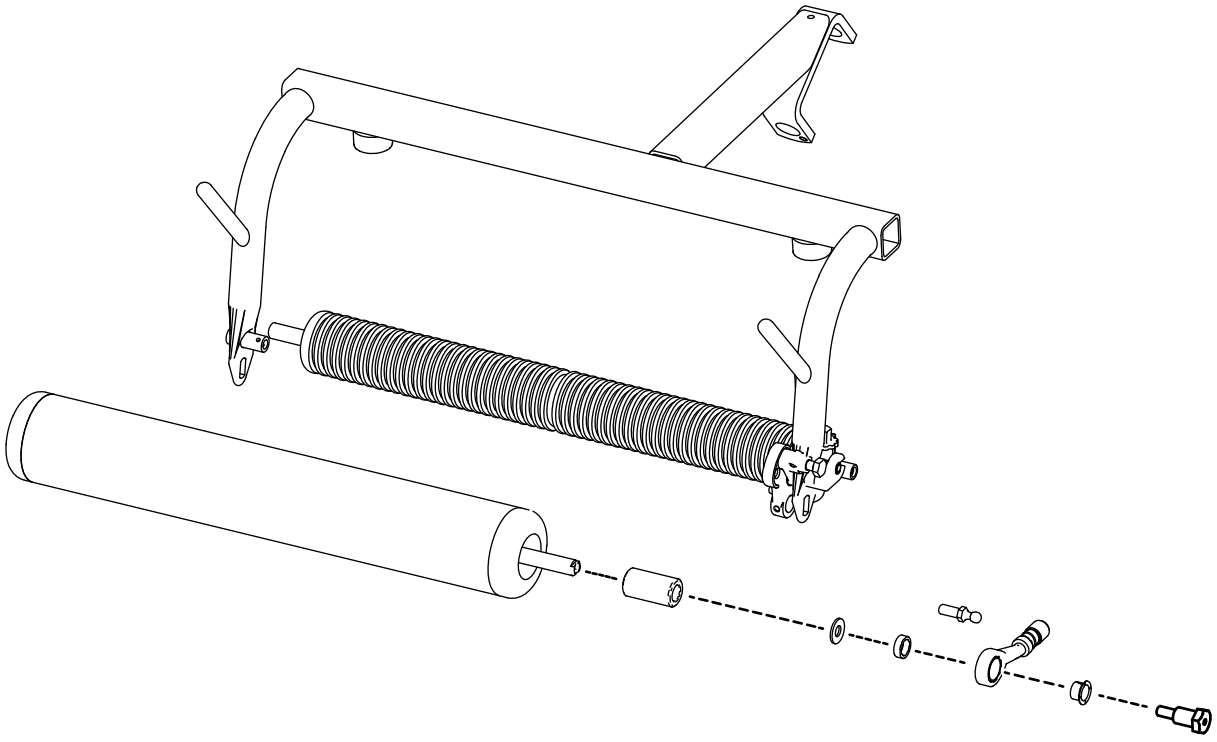

G604616

IMPORTANT

The bearings on this roller are sealed. You cannot grease the roller using the grease fitting.


TORO®