Form No. 3431-969 Rev G

TORO®

Count on it.

Parts Catalog

30in TurfMaster® HDX

Walk-Behind Lawn Mower

Model No. 22225—Serial No. 400000000 and Up

Register at www.Toro.com.
Original Instructions (EN)

3431-969 G

Ordering Replacement Parts

To order replacement parts, please supply the part number, the quantity, and the description of each part desired.

Understanding Reference Numbers

Each identified part in an illustration has a reference number. The reference number for a part also appears in the parts list, along with other information about the part.

This catalog uses two special reference number formats, one to indicate parts in a service assembly and another to indicate the quantity of a given part in an illustration.

Service Assembly Reference Numbers

Parts in service assemblies have reference numbers in the form a:b. The a represents the reference number of the entire service assembly and the b represents a sequential number unique to each part within the service assembly.

For example, a wheel assembly might be identified by reference number 6, the tire by 6:1, the valve by 6:2, and the wheel by 6:3. When you order the assembly identified by reference number 6, you receive all parts identified by reference numbers 6:1,6:2, and 6:3. However, you may also order any part individually. Reference numbers of this type appear in illustration and in parts lists.

Reference Numbers Indicating Quantity

In an illustration, if a reference number indicates more than one part, the reference number has the form nX y. The n represents the quantity of the part, the X is the multiplication symbol, and the y represents the reference number.

For example, in an illustration, the reference number 2X 37 means that two of the parts identified by reference number 37 are indicated.

Contents

Deck, Frame and Chute Assembly 4
Spindle and Blade Assembly 6
Pulleys and Idler Assembly No. 126-7890 8
Side Discharge Chute Assembly 10
Grass Bag Assembly 12
Engine and Fuel Tank Assembly 14
Front Bumper and Wheel Assembly 16
Traction and Height-of-Cut Assembly 18
Handle Assembly 20
Attachments and Accessories 22

© 2026—The Toro® Company
8111 Lyndale Avenue South
Bloomington, MN 55420

Contact us at www.Toro.com.
Printed in the USA.
All Rights Reserved

Deck, Frame and Chute Assembly

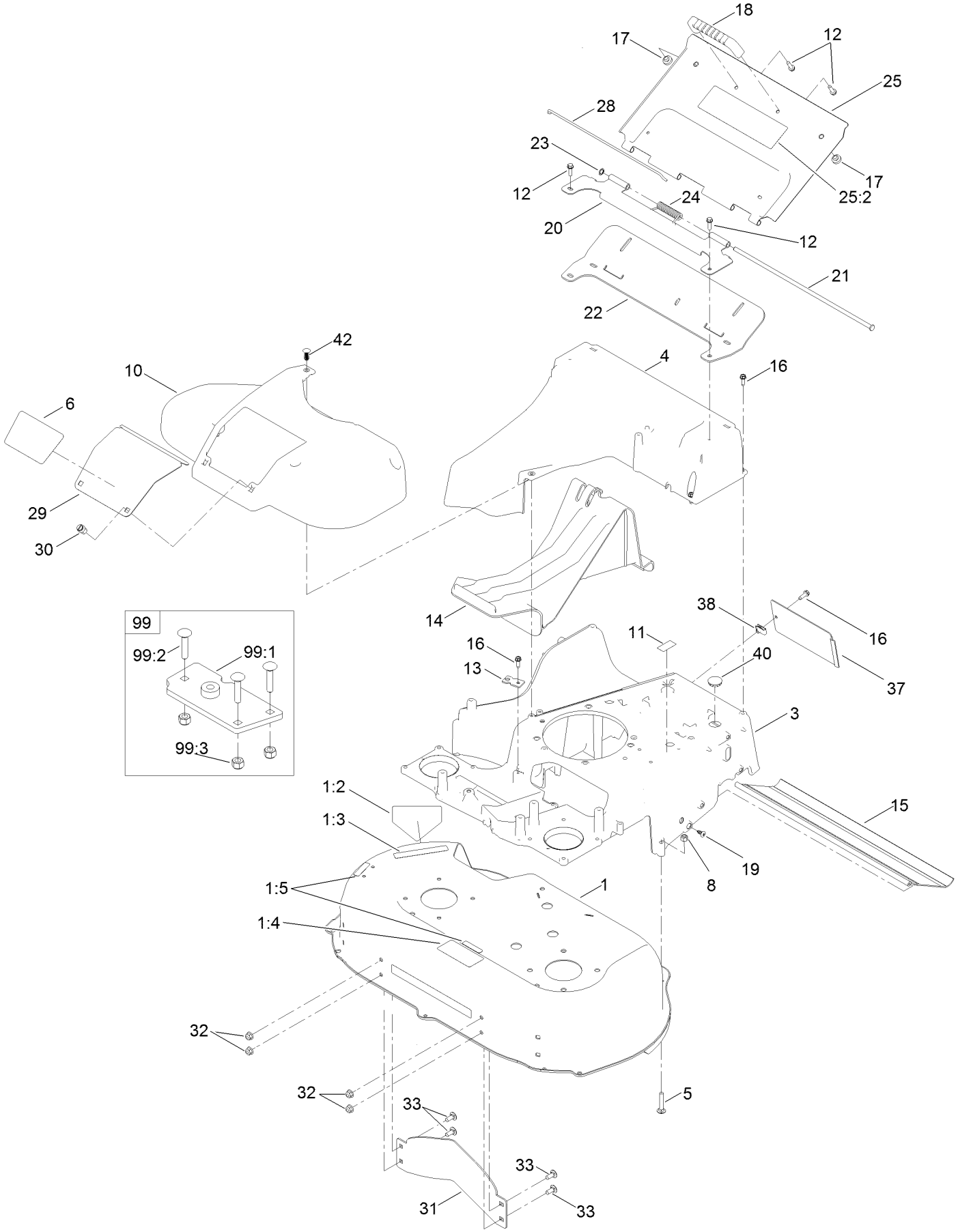

Deck, Frame and Chute Assembly (continued)

Ref.	Part Number	Qty.	Description
1	136-5900	1	Deck ASM
1:2	94-8072	1	Decal-Danger
1:3	93-7009	1	Decal-Danger
1:4	116-8528	1	Decal
1:5	120-9570	2	Decal-Warning
3	133-8107-01	1	*obs* Frame
4	133-8177	1	Chute
5	3230-5	2	Bolt-CARR
6	139-1674	1	Decal
8	3296-29	2	Nut-Lock, NI
10	139-5406	1	Cover-Belt
11	126-4345	1	Decal-Patent
12	46-8091	4	Screw-HWH
13	138-3224	1	Bracket-Cable, Traction
14	120-5225	1	Plug-Mulch
15	121-5841	1	Shield-Trailing
16	49-2040	9	Screw-HWHTF
17	1-513658	2	Bumper
18	65-5100	1	Handle-Door
19	117-1092	2	Screw-PTH
20	116-6351-03	1	Bracket-Hinge
21	116-6933	1	Pin-Hinge
22	116-6229	1	Seal-Door
23	32151-72	1	Ring-Retaining
24	116-7573	1	Spring-Torsion, Cover
25	116-8355	1	Rear Door ASM
25:2	116-7583	1	Decal-Warning
28	116-6966	1	Clip-Seal
29	121-5793-03	1	Door-Access
30	121-5840	2	Fastener
31	130-2352-01	1	Baffle-Control
32	104-8300	4	Nut-HF, NI
33	3230-23	4	Bolt-CARR
37	138-5332-01	1	Cover-Frame
38	107069	1	Clip
40	126-7151	1	Plug-Button
42	140-1341	1	Clip-Xmas Tree
99	125-5072	1	Frame Plate Kit
99:1	125-2542	1	Plate-Frame
99:2	3229-3	3	Screw-CARR
99:3	3296-42	3	Nut-Lock, NI

Spindle and Blade Assembly

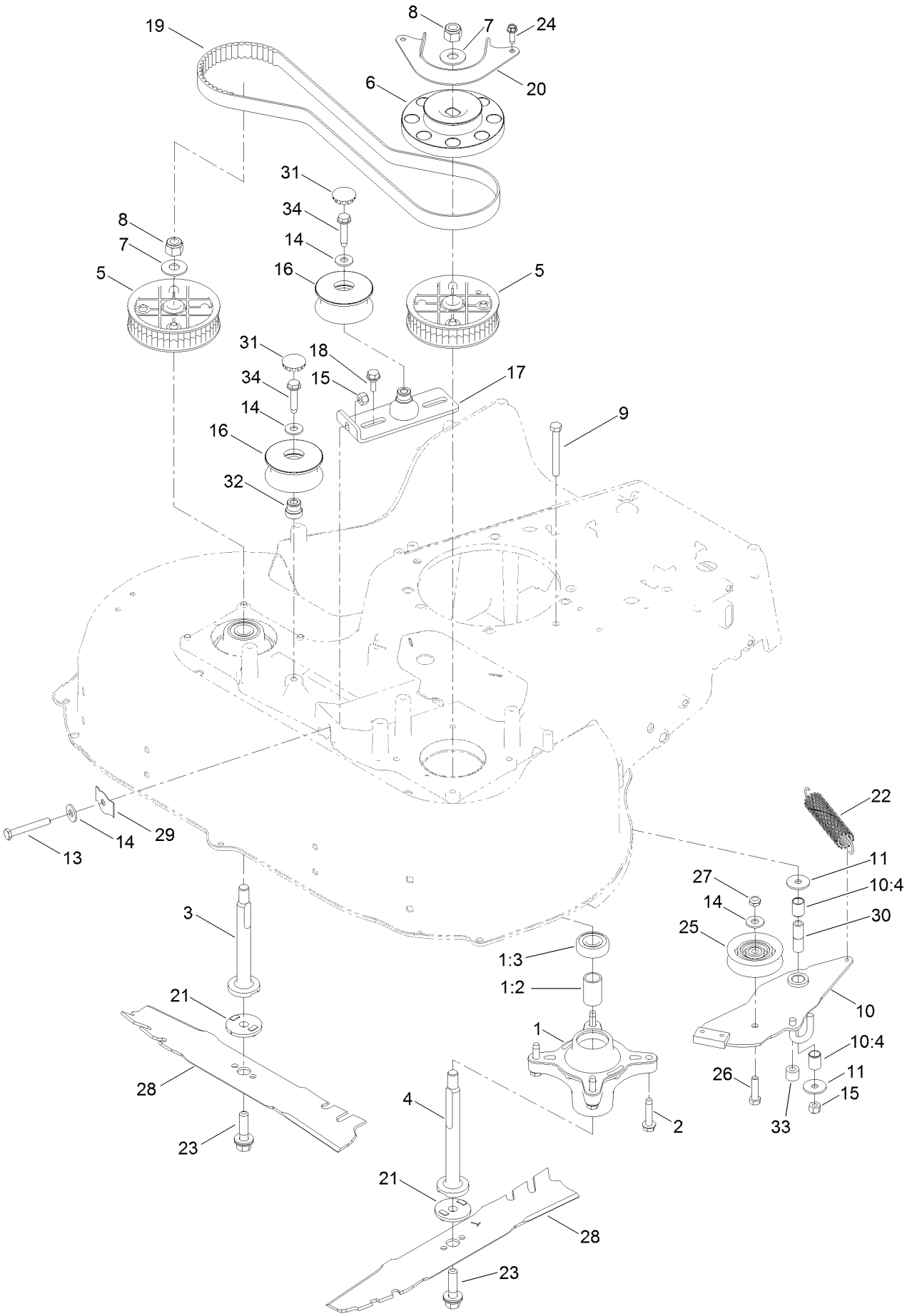

Spindle and Blade Assembly (continued)

Ref.	Part Number	Qty.	Description
1	121-9107	2	Spindle ASM
1:2	120-7935	2	Spacer
1:3	136-5441	2	Bearing-Ball
2	139-1731	8	Screw-Thd Roll, HWH
3	139-6612	1	Shaft-Spindle
4	139-6613	1	Shaft-Spindle
5	121-9100	2	Sprocket
6	130-6664	1	Pulley-Brake, Spindle
7	109-9505	2	Washer-Spring
8	3296-19	2	Nut-Hex
9	322-13	1	Screw-HH
10	136-5903	1	Brake Arm ASM
10:4	131-0819	2	Bushing-Sleeve
11	5-4460	2	Washer-Pivot
13	9114524	1	Bolt-TAP, HH
14	3256-3	4	Washer-Flat
15	3296-29	2	Nut-Lock, NI
16	126-7890	1	Pulleys And Idler Kit
17	126-6453	1	Bracket-Idler
18	120-7024	2	Screw-Shoulder, HWH
19	120-3335	1	Belt-Synchronous
20	120-5245-03	1	Guide-Belt, Spindle
21	120-5236	2	Adapter-Blade
22	121-5808	1	Spring-Extension, Brake
23	125-2466	2	Bolt-Blade
24	49-2040	2	Screw-HWHTF
25	120-7082	1	Pulley-Idler
26	322-6	1	Screw-HH
27	3296-47	1	Nut-Lock,NI
28	116-6358-03	2	Blade-Rotary
29	121-2336	1	Spring-Flat
30	131-0823	1	Spacer-Brake
31	126-7151	2	Plug-Button
32	131-4504	1	Adapter-Bore
33	133-1964	1	Spacer
34	32144-57	2	Screw-Thd Roll

Pulleys and Idler Assembly No. 126-7890

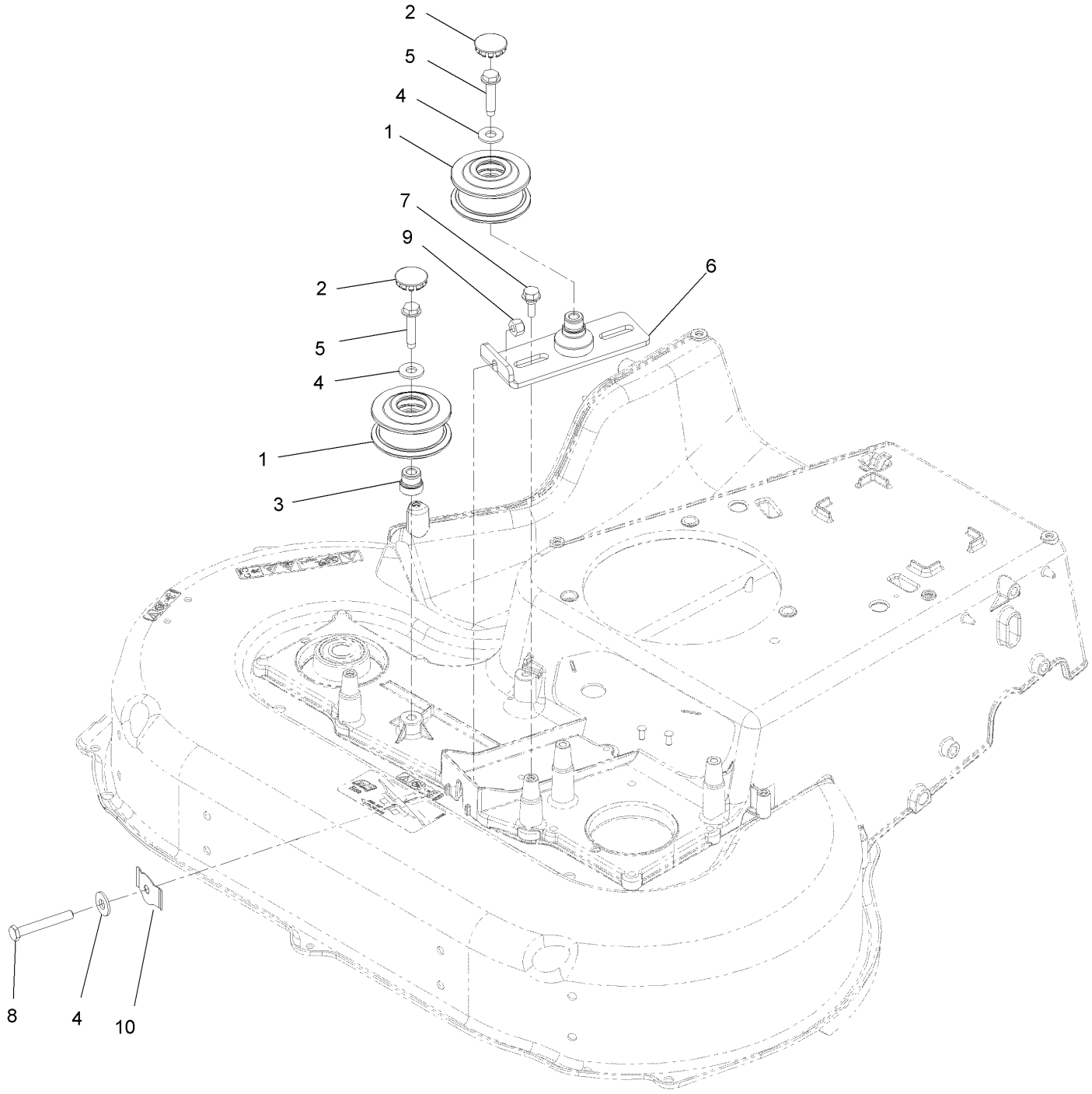

Pulleys and Idler Assembly No. 126-7890 (continued)

Ref.	Part Number	Qty.	Description
1	126-5880	2	Pulley-Idler, Flat
2	126-7151	2	Plug-Button
3	131-4504	1	Adapter-Bore
4	3256-3	3	Washer-Flat
5	32144-57	2	Screw-Thd Roll
6	126-6453	1	Bracket-Idler
7	120-7024	2	Screw-Shoulder, HWH
8	9114524	1	Bolt-TAP, HH
9	3296-29	1	Nut-Lock, NI
10	121-2336	1	Spring-Flat

Side Discharge Chute Assembly

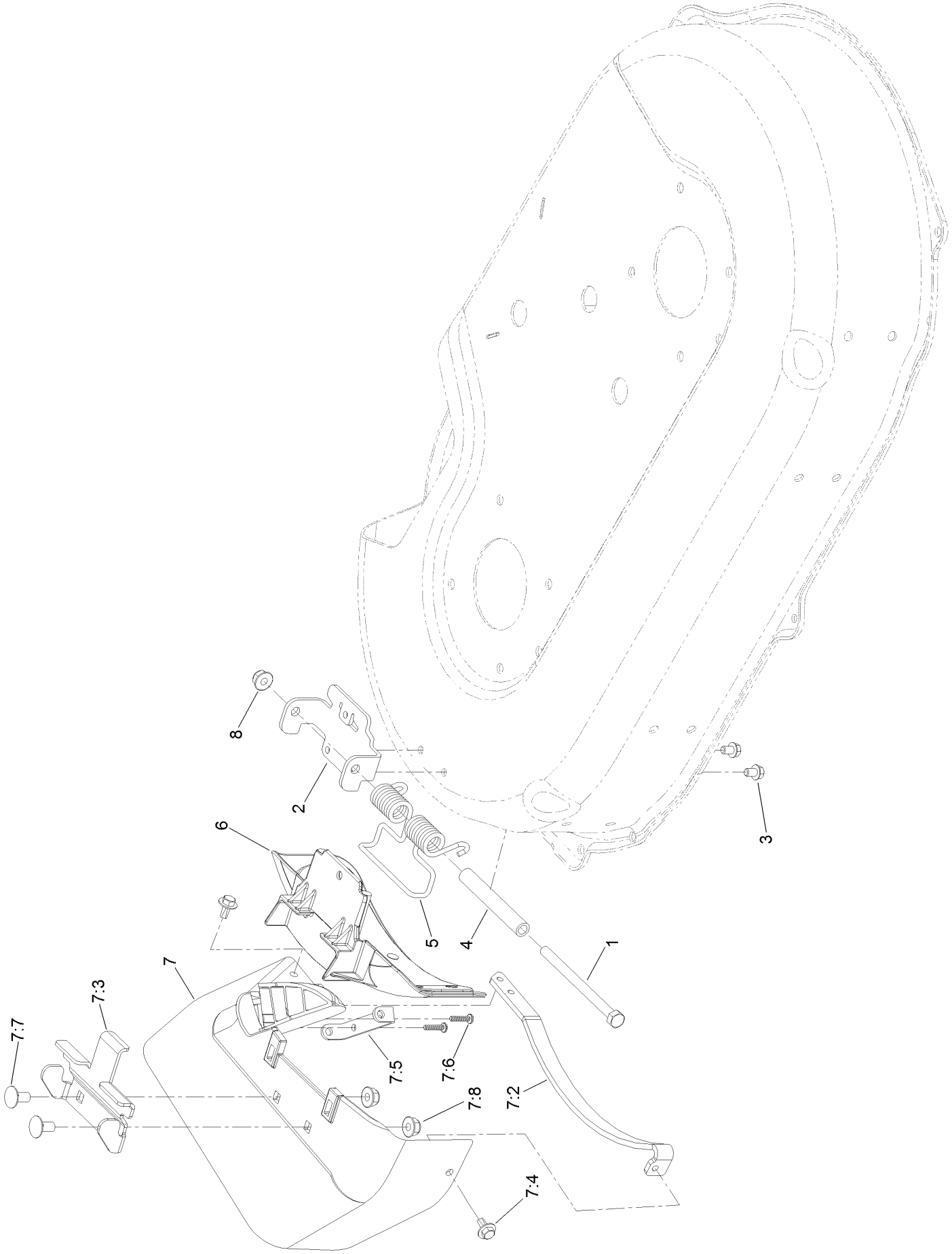

Side Discharge Chute Assembly (continued)

Ref.	Part Number	Qty.	Description
1	322-38	1	Screw-HH
2	121-9195	1	Hinge
3	99-8445	2	Screw-HWH
4	125-2478	1	Spacer
5	121-9193	1	Spring-Torsion
6	125-5093-01	1	Cover-Discharge
7	116-9754	1	Side Discharge Chute ASM
7:2	116-9752-03	1	Guard-Chute
7:3	121-9196	1	Bracket-Chute
7:4	46-8560	2	Screw-HHFTF
7:5	112-6416	1	Bracket-Cover
7:6	94-4496	2	Screw-PPH
7:7	3230-18	2	Screw-CARR
7:8	104-8300	2	Nut-HF, NI
8	104-8300	1	Nut-HF, NI

Grass Bag Assembly

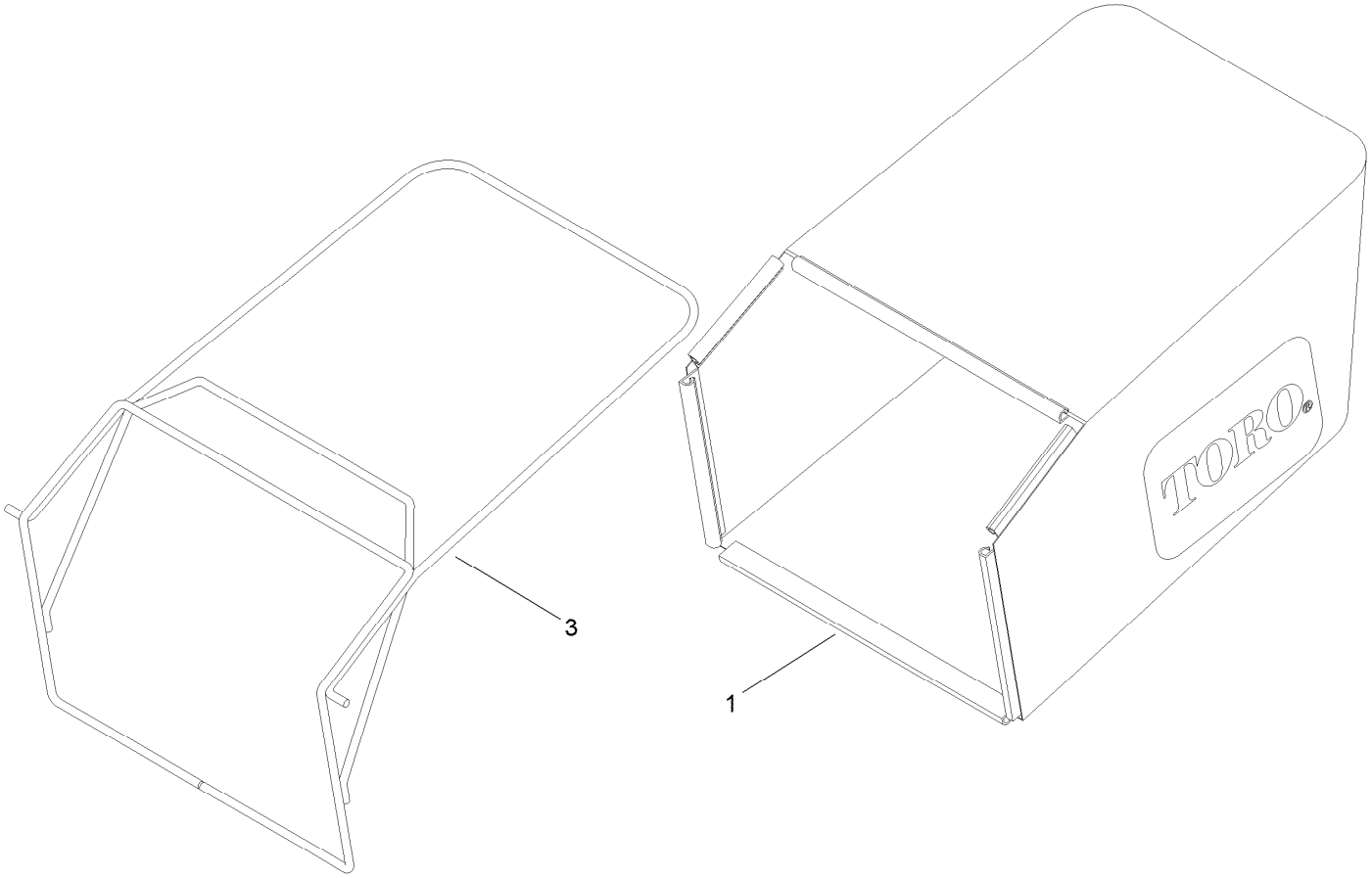

Grass Bag Assembly (continued)

Ref.	*Part Number*	*Qty.*	*Description*
1	121-5775	1	Grass Bag ASM
3	116-5596-03	1	Frame-Bag

Engine and Fuel Tank Assembly

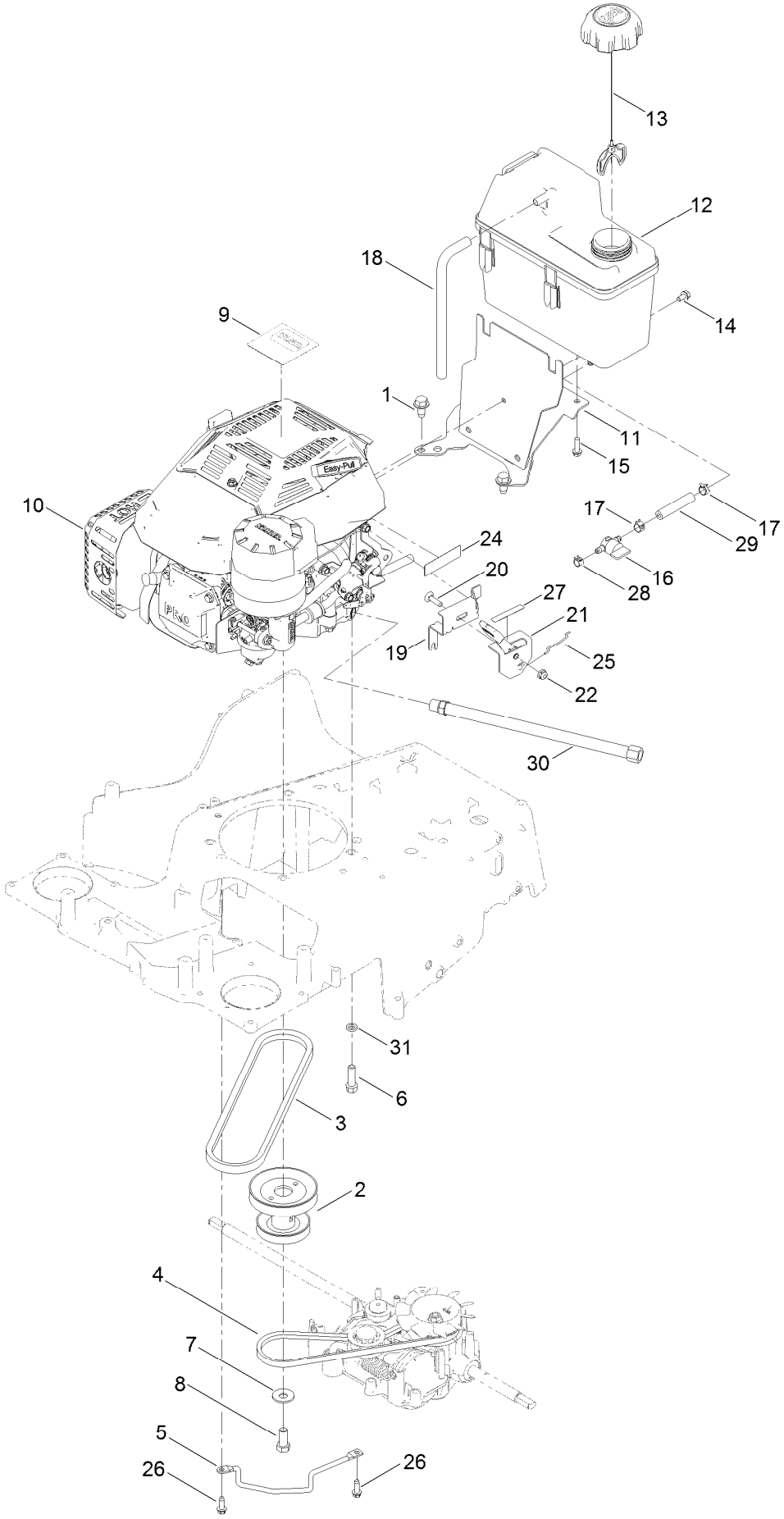

Engine and Fuel Tank Assembly (continued)

Ref.	Part Number	Qty.	Description
1	110-9380	2	Screw-HWH
2	137-9181	1	Pulley-Engine
3	121-5765	1	V-Belt
4	133-8151	1	Belt-V
5	138-5331-03	1	Rod-Guide, Belt
6	95-1727	3	Screw-Taptite
7	3290-465	1	Washer-Belleville
8	3212-4	1	Screw-HH
9	139-1807	1	Decal-Toro
10		1	Engine-Kohler, Cv200-3011 ■●
11	137-9180-03	1	Tank Mount ASM
12	114-0280	1	Tank-Fuel
13	137-4127	1	Cap-Fuel
14	116-8929	1	Screw-HWH Trs,Patch
15	46-8091	2	Screw-HWH
16	1-603770	1	Valve-Fuel
17	2412-98	2	Clamp-Hose
18	115-0962	1	Hose-Vent, Canister
19	138-5386-03	1	Bracket-Throttle
20	3229-30	1	Screw-CARR
21	130-9655	1	Control-Throttle
22	104-7201	1	Nut-HF, NI
24	116-9313	1	Decal-Warning, Engine
25	138-5387	1	Wire-Link
26	49-2040	2	Screw-HWHTF
27	130-9656	1	Decal-Throttle, Choke
28	2412-80	1	Clamp-Hose
29	109-0304	1	Hose-Fuel
30	117-1261	1	Hose-Drain, Oil
31	104662	1	Spacer

● Not serviced separately

■ Obtain parts from www.kohlerplus.com

Front Bumper and Wheel Assembly

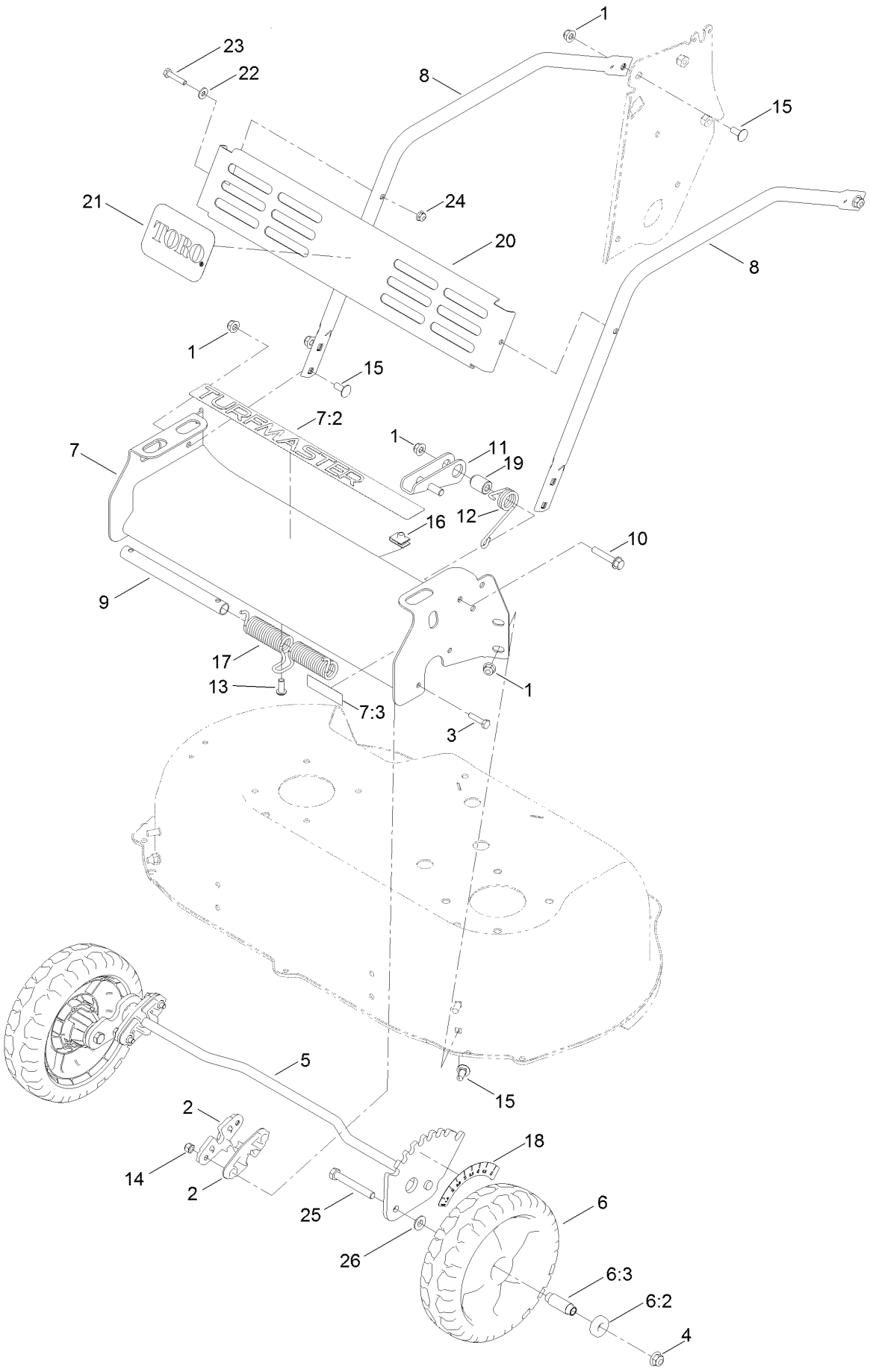

Front Bumper and Wheel Assembly (continued)

Ref.	Part Number	Qty.	Description
1	104-8300	11	Nut-HF, NI
2	121-5781	4	Bushing-Front
3	321-7	4	Screw-HH
4	104-8301	2	Nut-HF, NI
5	139-8968	1	Front Axle ASM
6	133-2639	2	Wheel
6:2	133-2603	2	Bearing-Ball
6:3	125-1077	1	Spacer
7	139-6616	1	Front Bumper ASM
7:2	139-1675	1	Decal-Turfmaster HDX
7:3	116-7581	1	Decal-Warning
8	121-9168-03	2	Brace
9	131-9690	1	Mandrell-Spring
10	94-5780	1	Screw-HWH
11	139-1744	1	Lock-Height, Adj
12	120-9465	1	Spring-Torsion
13	3274-55	1	Screw-HSBH
14	3296-42	4	Nut-Lock, NI
15	3230-23	10	Bolt-CARR
16	94-2413	1	Nut-U
17	121-2337	1	Spring-Torsion
18	136-9077	1	Decal-HOC, Front
19	125-2486	1	Spacer
20	121-9187-03	1	Shield
21	117-0871	1	Decal
22	3256-22	2	Washer-Flat
23	321-8	2	Screw-HH
24	104-7201	2	Nut-HF, NI
25	323-13	2	Screw-HH
26	74-1671	2	Spacer-Cover, Wheel

Traction and Height-of-Cut Assembly

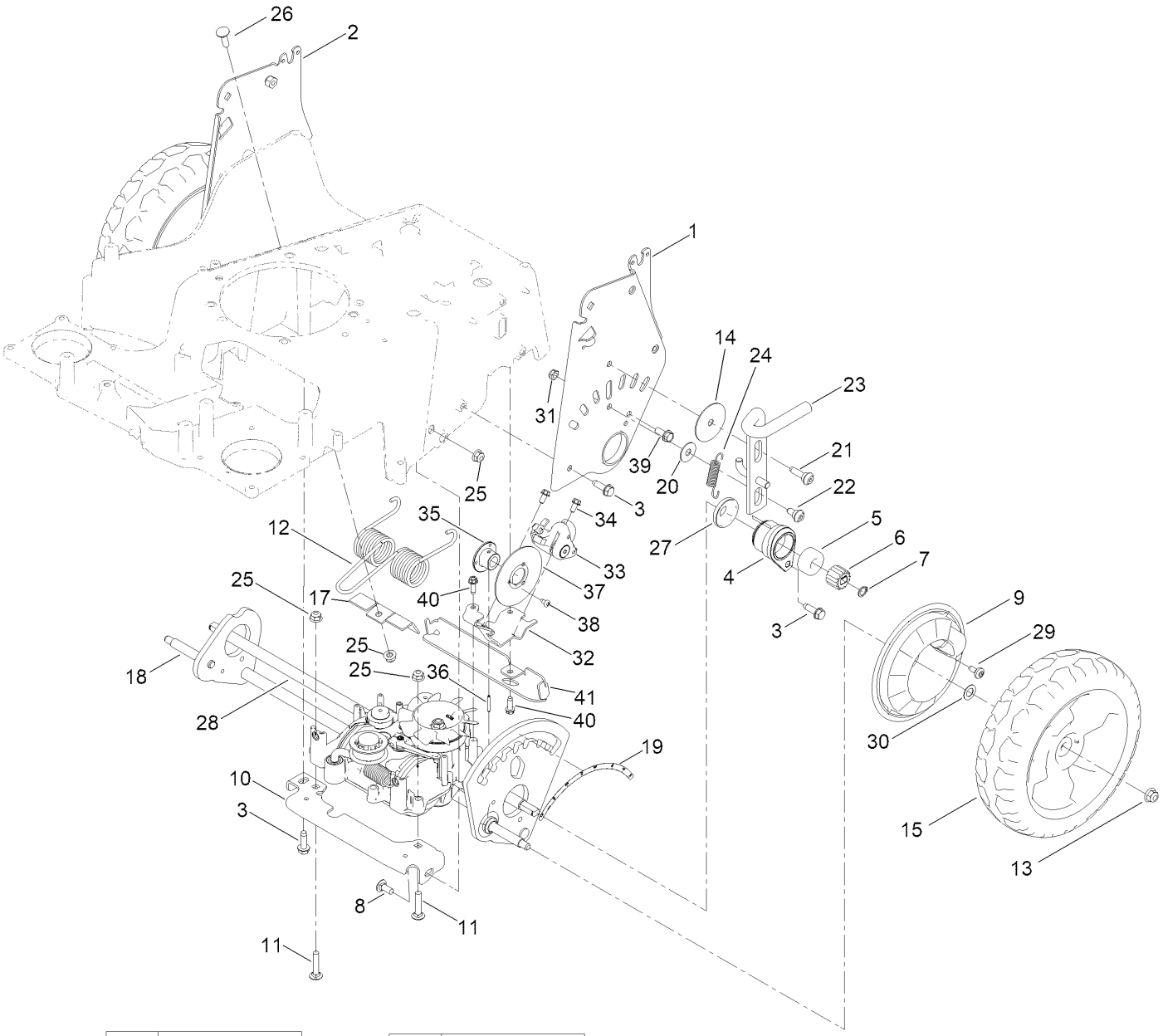

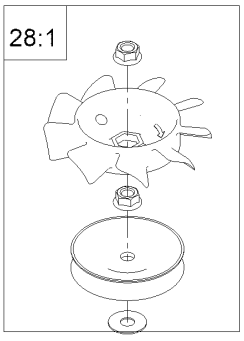

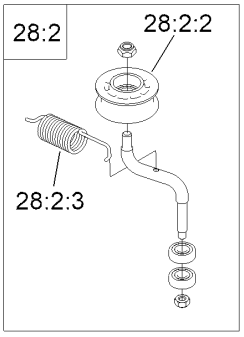

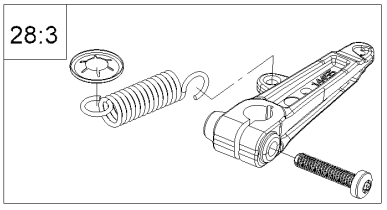

Traction and Height-of-Cut Assembly (continued)

Ref.	Part Number	Qty.	Description
1	137-9172-03	1	HOC Plate Assembly
2	137-9173-03	1	HOC Plate Assembly
3	701243	7	Screw-Thd Roll, HWH
4	137-9183	2	Bearing Retainer ASM
5	137-4779	4	Bearing-Ball, Custom
6	136-9111	2	Gear-Pinion, 15T
7	32151-61	2	Ring-Retaining
8	3230-23	1	Bolt-CARR
9	136-7095	2	Cover-Wheel
10	133-8104-03	1	Bracket-Transmission, Front
11	3230-4	2	Screw-CARR
12	121-2368	1	Spring-Torsion
13	104-8301	2	Nut-HF, NI
14	125-2540	1	Washer-Plain
15	137-9174	2	10.5 In. Wheel ASM
17	121-2397	1	Bracket
18	139-8967	1	Rear Axle ASM
19	116-7127	1	Decal-HOC, Rear
20	52-2860	1	Washer
21	119-2267	1	Screw-Shoulder, BHTF
22	120-9471	1	Bolt-Shoulder
23	139-1737	1	Lock-Height, Adj
24	138-5393	1	Spring-Extension
25	104-8300	4	Nut-HF, NI
26	3230-2	1	Bolt-CARR
27	137-9185	2	Cover-Bearing
28	133-2670	1	Transmission-Mv702
28:1	139-1837	1	Pulley & Fan Repair Kit
28:2	139-1842	1	Idler Pulley Repair Kit
28:2:2	139-1844	1	Pulley-Idler
28:2:3	139-1845	1	Spring-Tension, Belt
28:3	139-8974	1	Clutch Lever Repair Kit
29	120-7950	2	Screw-Torx
30	36-4780	2	Washer-Plain
31	3296-47	1	Nut-Lock,NI
32	138-5394-03	1	Bracket-Mount, Brake
33	138-5398	1	Caliper-Brake, Disc
33:1	139-8999	2	Pad-Brake, Disc ●
34	32144-4	2	Screw-HWH
35	139-8990	1	Hub-Rotor
36	933156	1	Pin-Roll
37	138-5396	1	Disc-Rotor
38	139-8960	3	Screw-Torx PH Thd Roll
39	609471	1	Screw
40	49-2040	2	Screw-HWHTF
41	140-1262-01	1	Bracket-Support, Cable

● Not illustrated

Handle Assembly

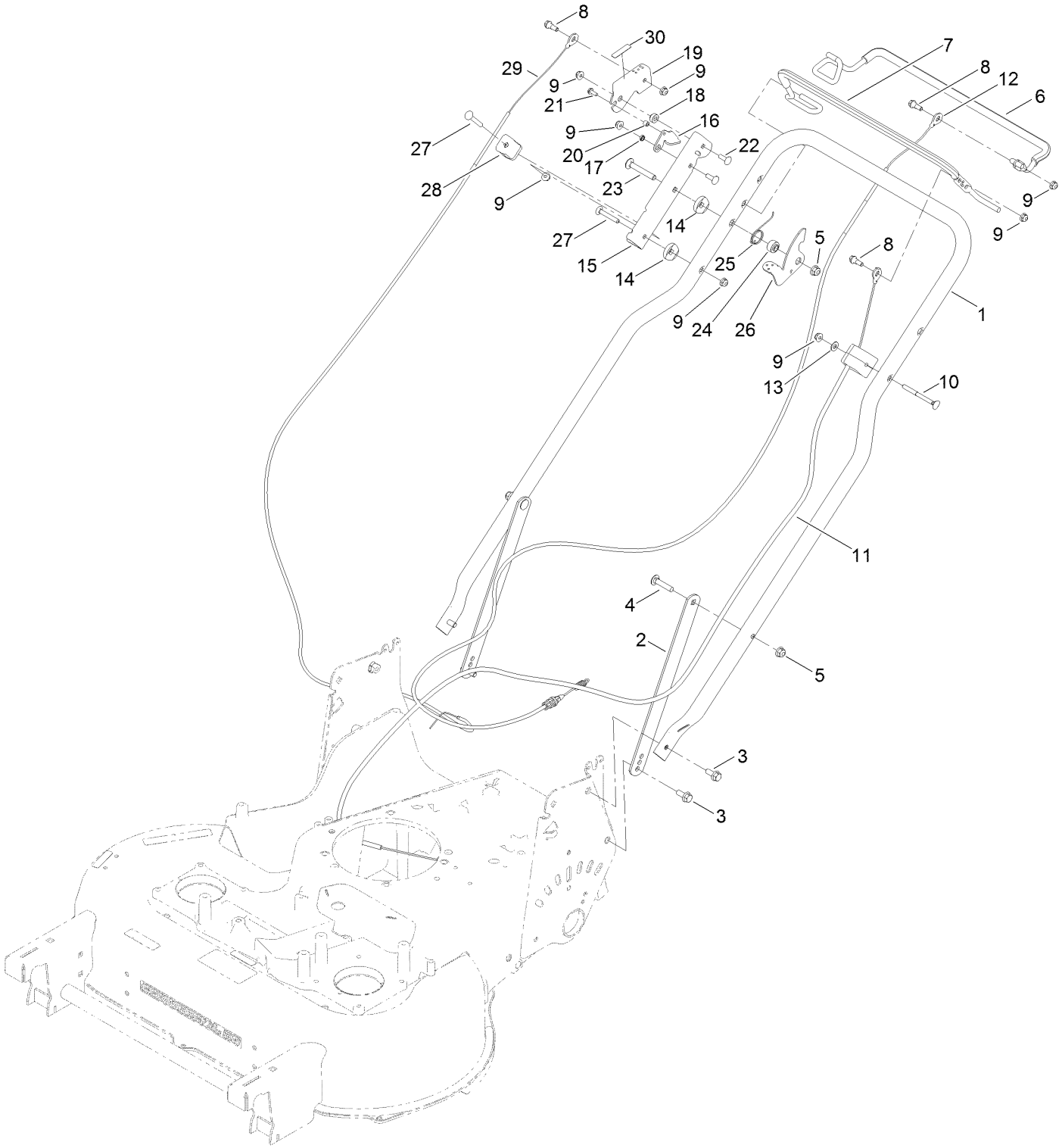

Handle Assembly (continued)

Ref.	Part Number	Qty.	Description
1	137-4767-03	1	Handle
2	116-8208-03	2	Support-Handle
3	116-7230	4	Screw-HHF
4	3230-4	2	Screw-CARR
5	104-8300	3	Nut-HF, NI
6	139-1815	1	Bail-Traction, Coated
7	137-4810	1	Bail-BBC, Coated
8	42-3560	3	Bolt-Shoulder
9	104-7201	8	Nut-HF, NI
10	92-2267	1	Screw-Handle
11	137-4759	1	Cable-BBC
12	137-4807	1	Cable-Traction
13	3256-1	1	Washer-Flat
14	106-7260	2	Washer-Curved
15	139-1818-03	1	Mount-Lever, Brake
16	139-1813	1	*obs* Link-Actuation, Brake
17	138-5368	1	Spacer
18	139-1817	1	Washer-Stepped
19	139-1819	1	Lever-Brake
20	117-9965	1	Spacer
21	32144-1	1	Screw-Taptite
22	1-807512	2	Bolt-CARR
23	3230-7	1	Bolt-CARR
24	116-2690	1	Bushing-Stepped
25	109-9318	1	Spring-Lever, BBC
26	116-2998	1	Lever-BBC
27	3229-5	2	Screw-CARR
28	106-6801	1	Anchor-Cable
29	138-5399	1	Cable-Brake, Parking
30	139-5405	1	Decal-Brake, Parking
99	614249	4	Tie-Cable ●

● Not illustrated

Attachments and Accessories

For 22225 — 30in TurfMaster HDX Walk-Behind Lawn Mower

Product Name	Model/Part
Atomic Blade 15.4in	120-9500-03
Mulching Kit	125-5064
Idler Pulley Kit	126-7890

Notes:



Count on it.