FORM NO. 92-0402P

TORO®

MODEL NO. 41514-30001 & UP

PARTS MANUAL

MULTI-PRO 5200
VEHICLE

SAFETY AND INSTRUCTION DECALS

The following safety and instruction decals are installed on the machine. If any become damaged or illegible, replace them. The decal part numbers are listed below. Order replacements from your Authorized Toro Distributor.



Part No. 87-0580: Located on right-hand side of Dash Panel.



Part No. 87-0450: Located on top of engine.



Part No. 92-0479: Located on Dash Panel, left of ON/OFF Switch.



Part No. 87-0500: Located on top of Hydraulic Tank.

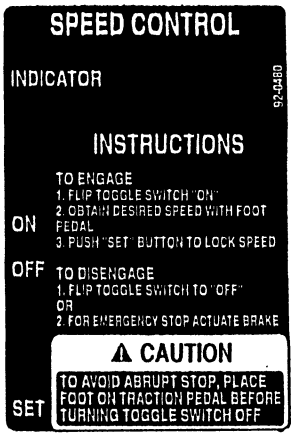

Part No. 92-0480: Located on Dash Panel, between Gauges and ON/OFF Switch.



Part No. 71-3730: Located on top of Gasoline Tank.



Part No. 87-0530: Located on Dash Panel, above Brake Lock.



Part No. 42958: Located on left-hand Radiator Brace.

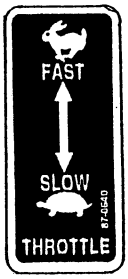

Part No. 87-0640: Located on front of Seat Support, next to Throttle Control.



Part No. 41176: Located on Dash Panel, above Key Switch.

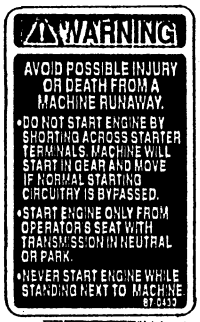

Part No. 87-0430: Located on left-hand Seat Support.



Part No. 66-1210: Located on Console Front.



Part No. 41174: Located next to Directional Control Valve.



Part No. 65-3090: Located on left-hand side of Dash Panel.



Part No. 87-0620: Located on Console Front.

©The Toro Company-1993

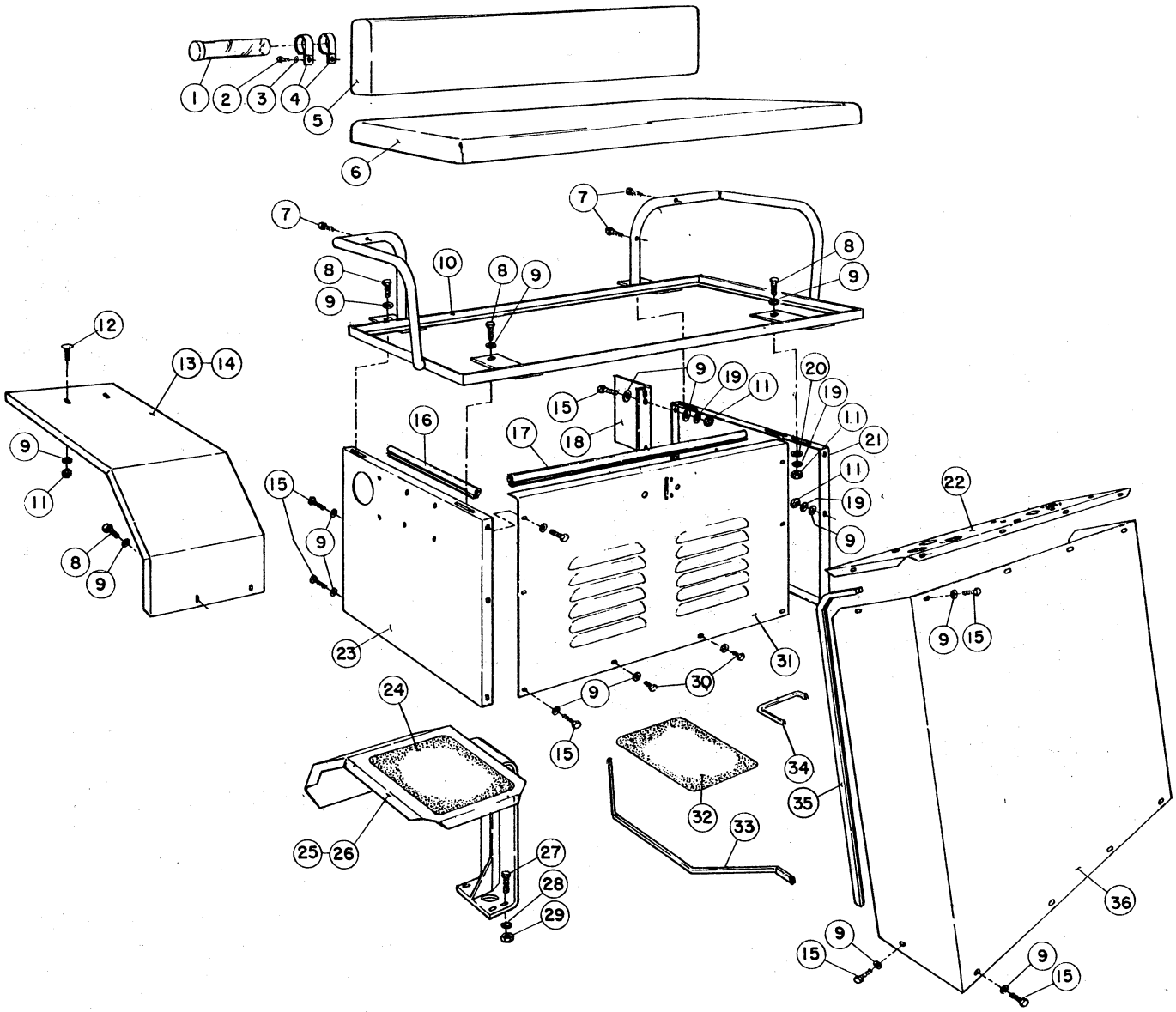

SEAT, SHROUDS & CONSOLE

SEAT, SHROUDS & CONSOLE

REF	PART NO.	DESCRIPTION	QTY
1	42559	Instruction Manual Tube	1
2	42614	Wood Screw, #10 x 3/4	2
3	24-7-BD	Flat Washer, #10	2
4	42560	Tube Mounting Bracket	1
5	41813	Seat Back	1
6	41812	Seat Bottom	1
7	41898	Wood Screw, #10 x 1-3/4"	4
8	20-26-AGD	HHCS, 5/16 NC x 1"	8
9	24-10-BD	Flat Washer, 5/16 S.A.E.	42
10	42009	Seat Frame Assy	1
11	22-12-AJD	Hex Nut, 5/16 NC	22
12	25-25-AGD	Carriage Bolt, 5/16 x 3/4	4
13	92-0182	Rear Fender - R.H.	1
14	92-0183	Rear Fender - L.H.	1
15	20-24-AGD	HHCS, 5/16 NC x 3/4	22
16	42658	Side Panel Trim	1
17	42657	Front Panel Trim	1
18	41998	Directional Valve Bracket	1
19	23-10-GD	Lock Washer, 5/16	18
20	356308	Special Washer	1
21	42660	Side Panel - L.H.	1
22	92-0468	Dash Panel	1
23	42659	Side Panel - R.H.	1
24	92-0127	Safety Track, 8 x 10"	2
25	42031	Front Fender Assy - R.H.	1
26	42038	Front Fender Assy - L.H.	1
27	20-47-AGD	HHCS, 3/8 NC x 1"	8
28	23-11-GD	Lock Washer, 3/8	8
29	22-13-AJD	Hex Nut, 3/8 NC	8
30	20-22-AGD	HHCS, 5/16 NC x 1/2	2
31	42655	Front Seat Panel	1
32	92-0032	Safety Track, 6 x 10"	2
33	92-0475	Floor Edge Trim	2
34	41997	Floor Plate Trim	1
35	42001	Console Trim	1
36	41999	Front Console Wrapper	1

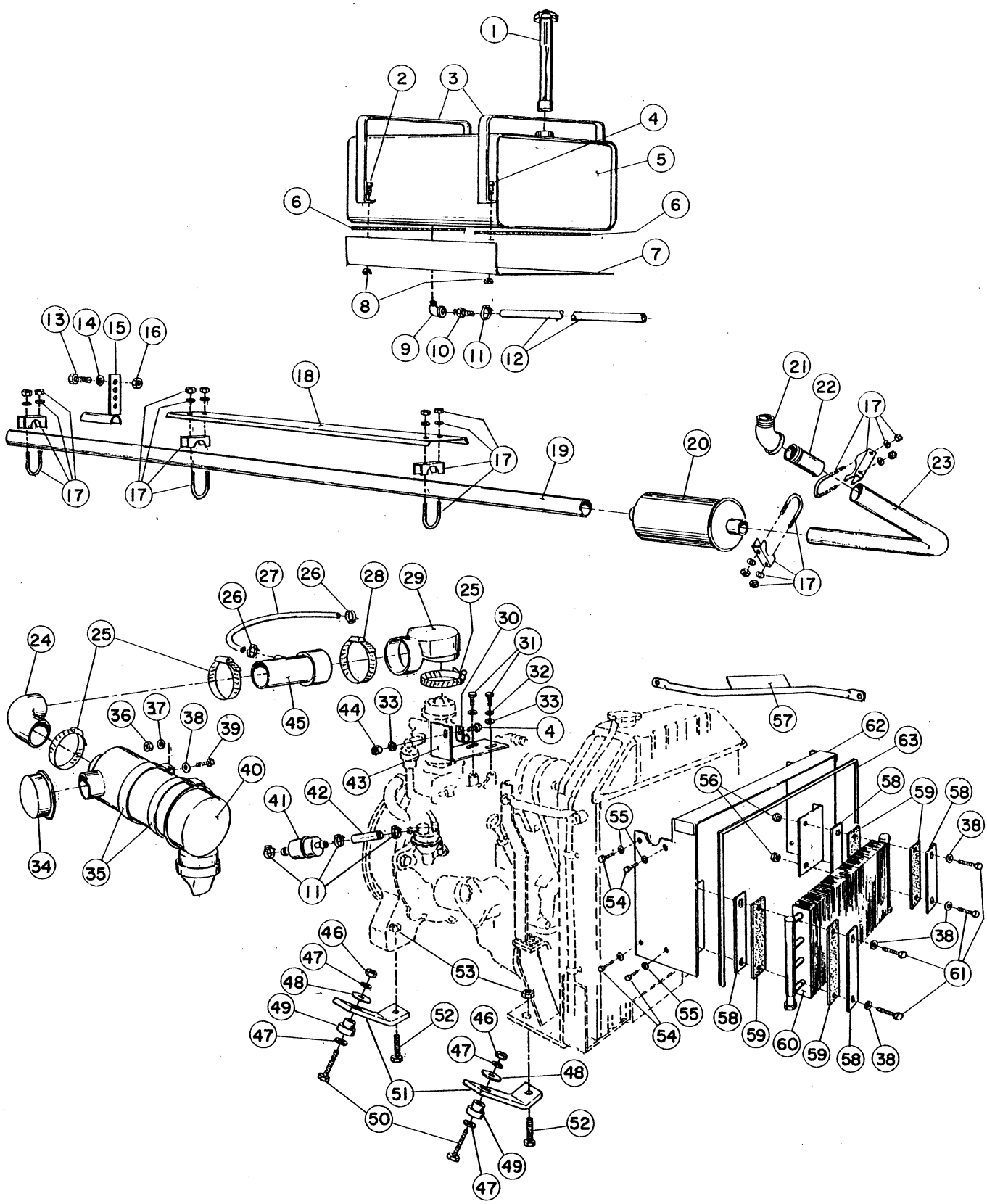

FUEL TANK & EXHAUST SYSTEM (5200)

FUEL TANK & EXHAUST SYSTEM (5200)

REF	PART NO.	DESCRIPTION	QTY
1	41117	Fuel Cap & Gauge	1
2	20-26-AD	HHCS, 1/4 NC x 1-1/4	2
3	41994	Tank Strap	2
4	20-3-AGD	HHCS, 1/4 NC x 3/4	3
5	41769	Gasoline Tank	1
6	41995	Armaflex Strip	2
7	92-0469	Bottom Pan	1
8	22-11-AJFD	Lock Nut, 1/4 NC	4
9	9900	90° St. Elbow, 1/8 Black Iron	1
10	26291	Hose Barb, 1/8 MPT x 1/4 Barb	1
11	97406	Hose Clamp	4
12	42652	Fuel Line Hose	1
13	20-47-AGD	HHCS, 3/8 NC x 1" (Grade 5)	1
14	24-11-AD	Flat Washer, 3/8	1
15	41912	Tailpipe Hanger	1
16	22-13-AJFD	Lock Nut, 3/8 NC	1
17	94485	Muffler Clamp	6
18	42040	Tailpipe Shield	1
19	42624	Tailpipe	1
20	42622	Muffler	1
21	9990	45° St. Elbow, 1-1/4 Black Iron	1
22	92-0016	Nipple, 1-1/4 x 3"	1
23	42623	Exhaust Pipe	1
24	41908	Exhaust Hose	1
25	26392	Hose Clamp	3
26	96609	Hose Clamp	2
27	42662	Oil Breather Hose, 5/8 I.D. x 14"	1
28	92-0054	Hose Clamp	1
29	42621	Reducer Elbow - Carb. Inlet	1
30	92-0477	Cable Clip	1
31	42605	Metric Screw, 6 M - 1 x 16	2
32	23-9-GD	Lock Washer, 1/4	2
33	24-9-BD	Flat Washer, 1/4 S.A.E.	2
34	41909	Air Inlet Hood	1
35	41906	Air Cleaner Mtg. Band	2
36	22-12-AJD	Hex Nut, 5/16 NC	4
37	23-10-GD	Lock Washer, 5/16	4
38	24-10-BD	Flat Washer, 5/16 S.A.E.	8
39	20-24-AGD	HHCS, 5/16 NC x 3/4 (Grade 5)	4
40	41904	Air Cleaner	1
	41905	Air Cleaner Filter Element	1
41	41770	Gasoline Filter	1
42	42020	Fuel Line Hose	1
43	42653	Throttle Cable Bracket	1
44	22-11-AJD	Hex Nut, 1/4 NC	1
45	42661	Aircleaner Tube Assy	1
46	22-15-BJFD	Lock Nut, 1/2 NF	4
47	24-13-AD	Flat Washer	4
48	41985	Special Washer	4
49	41782	Motor Mount	4
50	20-91-BGD	HHCS, 1/2 NF x 2-1/2" (Grade 5)	4
51	42643	Engine Mounting Bracket	4
52	20-122-AGD	HHCS, 5/8 NC x 1-3/4 (Grade 5)	4
53	22-17-AJFD	Lock Nut, 5/8 NC	4
54	34-76-AMTD	Self-Tappping Screw, #8 NC x 5/8	8
55	23-7-GD	Lock Washer, 3/16	8
56	22-12-AJFD	Lock Nut, 5/16	4
57	42959	Decal Plate Assy	1
	42958	Decal	1
58	42070	Backing Strip	4
59	42071	Armaflex Strip	4
60	42773	Oil Cooler	1
61	20-29-AGD	HHCS, 5/16 NC x 1-3/4" (Grade 5)	4
62	42639	Shroud & Cooler Bracket	1
63	42656	Shroud Trim	1

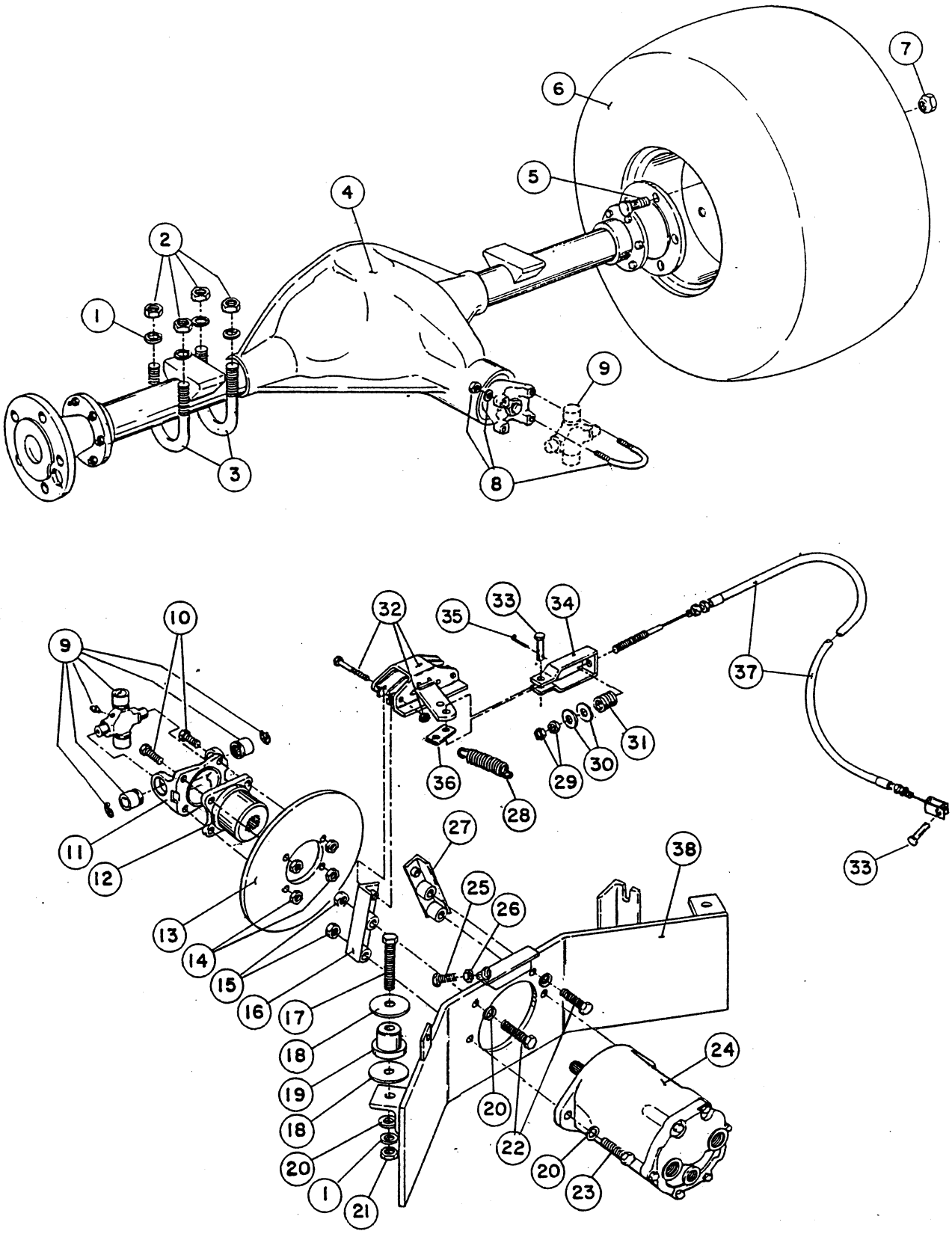

REAR AXLE & BRAKES (5200)

REAR AXLE & BRAKES (5200)

REF	PART NO.	DESCRIPTION	QTY
1	23-13-GD	Lock Washer, 1/2	10
2	22-15-BJD	Hex Nut, 1/2 NF	8
3	41783	U-Bolt	4
4	41977	Rear Axle Welded Assy	1
5	41772	Bolt-Hub Stud	10
6	41765	Tire & Wheel Assy	2
	41767	Tire (f/w 41765)	2
	41766	Wheel Rim (f/w 41765)	2
7	92-0014	Wheel Nut, 1/2 NF x 60	10
8	40220	U-Bolt Assy	2
9	41773	Journal & Bearing	1
10	20-48-BGD	HHCS, 3/8 NF x 1-1/4"	4
11	41584	Flange Yoke	1
12	41583	Companion Flange	1
13	41775	Brake Disc	1
14	22-13-BJFD	Lock Nut, 3/8 NF	4
15	22-15-AJFD	Lock Nut, 1/2 NC	4
16	41986	Brake Brkt. Assy (R.H.)	1
17	20-95-AGD	HHCS, 1/2 NC x 3-1/2"	2
18	41985	Special Washer	4
19	41782	Rubber Motor Mount	2
20	24-13-AD	Flat Washer, 1/2	6
21	22-15-AJD	Hex Nut, 1/2 NC	2
22	20-89-AGD	HHCS, 1/2 NC x 2"	2
23	20-92-AGD	HHCS, 1/2 NC x 2-3/4"	2
24	41758	Piston Motor	1
	42595	Motor Shaft Seal	1
25	20-49-AGD	HHCS, 3/8 NC x 1-1/2	1
26	22-13-AJD	Hex Nut, 3/8 NC	1
27	41989	Brake Brkt. Assy. (L.H.)	1
28	41721	Extension Spring	1
29	22-12-BJD	Hex Nut, 5/16 NF	2
30	356308	Special Washer	2
31	41847	Compression Spring	1
32	31506	Brake Assy - Caliper	1
	31689	Brake Pad	2
33	40258	Clevis Pin, 5/16	2
34	41991	Brake Clevis Assy	1
35	28-18-D	Cotter Pin, 1/8 x 1"	1
36	42726	Spring Link	1
37	41845	Brake Cable Assy	1
38	41979	Motor Mounting Assy	1

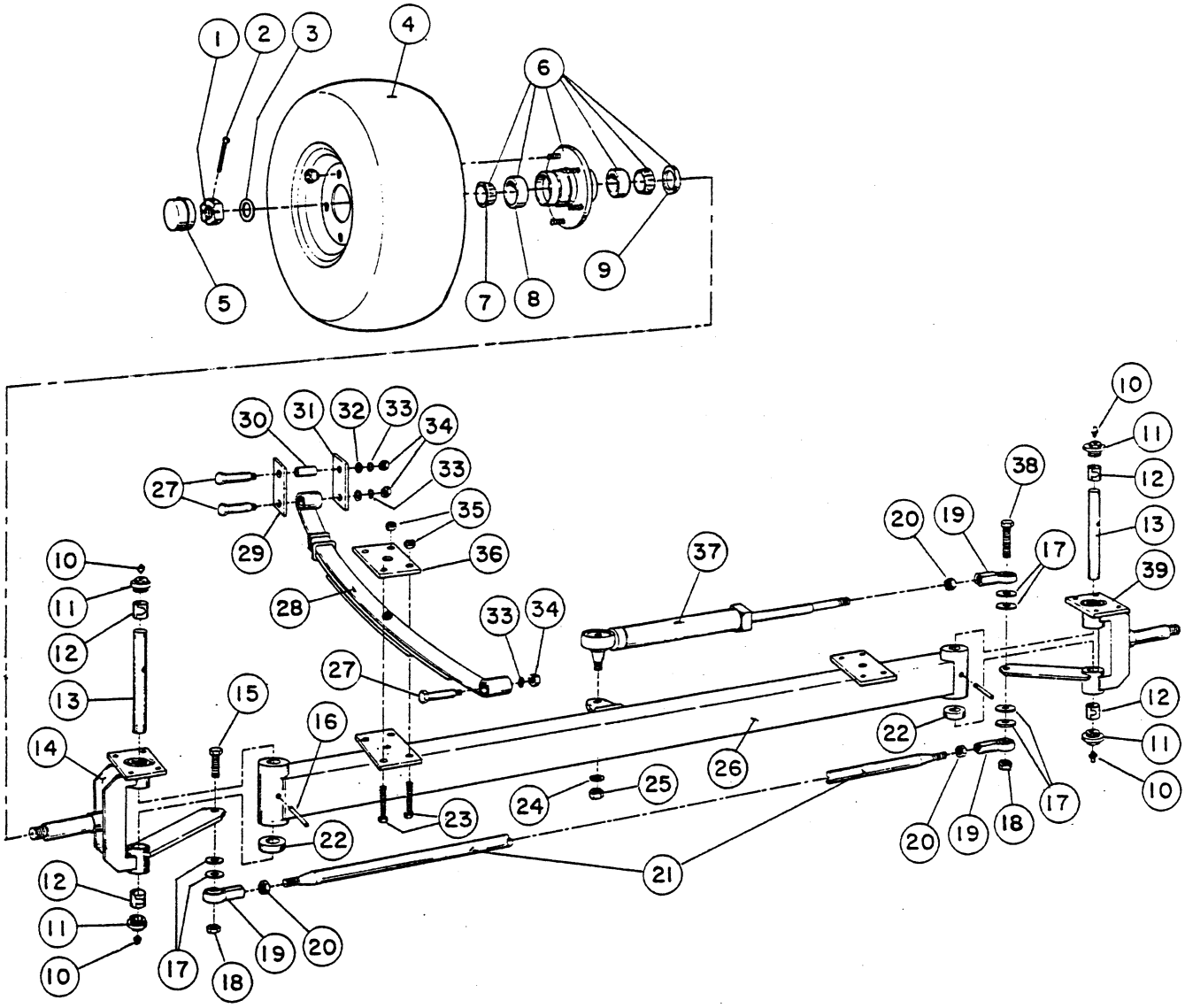

FRONT AXLE (5200)

FRONT AXLE (5200)

REF	PART NO.	DESCRIPTION	QTY
1	22-18-BJLD	Hex Slotted Nut, 3/4 NF	2
2	28-20-C	Cotter Pin, 1/8 x 1-1/2"	2
3	358042	Flat Washer	2
4	42329	Tire & Wheel Assy	2
	42330	Tire (f/w 42329)	1
	41169	Wheel Rim (f/w 42329)	1
5	40438	Dust Cap (f/w 40085)	1
6	40085	Hub Assy	2
7	92-0014	Cone (f/w 40085)	2
8	40439	Cup (f/w 40085)	2
9	41321	Seal (f/w 40085)	1
10	361011	Grease Fitting	4
11	539048	Special Plug	4
12	728062	King Pin Bearing	4
13	40081	King Pin	2
14	41924	Yoke Assy (R.H.)	1
15	20-88-BGD	HHCS, 1/2 NF x 1-3/4	1
16	29-199-C	Spring Pin, 1/4 x 2"	2
17	24-13-AD	Flat Washer	6
18	22-15-BJFD	Lock Nut, 1/2 NF	2
19	522087	Rod End	3
20	22-15-BJKD	Jam Nut, 1/2 NF	3
21	41781	Steering Tube	1
22	307358	Thrust Bearing	2
23	20-51-AGD	HHCS, 3/8 NC x 2 (Grade 5)	8
24	23-13-GD	Lock Washer, 1/2	1
25	22-15-BJD	Hex Nut, 1/2 NF	1
26	42561	Front Axle Assembly	1
27	42599	Shoulder Bolt	6
28	42588	Spring - Leaf	2
	42589	Spring Busing (f/w 42588)	AR
29	42576	Shackle - Inside	2
30	42592	Bushing - Shackle	2
31	42574	Shackle - Outside	2
32	24-14-AD	Flat Washer, 9/16	8
33	23-12-GD	Lock Washer, 7/16	6
34	22-14-AJD	Hex Nut, 7/16 NC	6
35	22-13-AJFD	Lock Nut, 3/8 NC	8
36	42575	Plate - Spring	2
37	27328	Cylinder	1
	28597	Seal & Wiper Kit	AR
38	20-91-BGD	HHCS< 1/2 NF x 2-1/2" (Grade 5)	1
39	41926	Yoke Assy (L.H.)	1

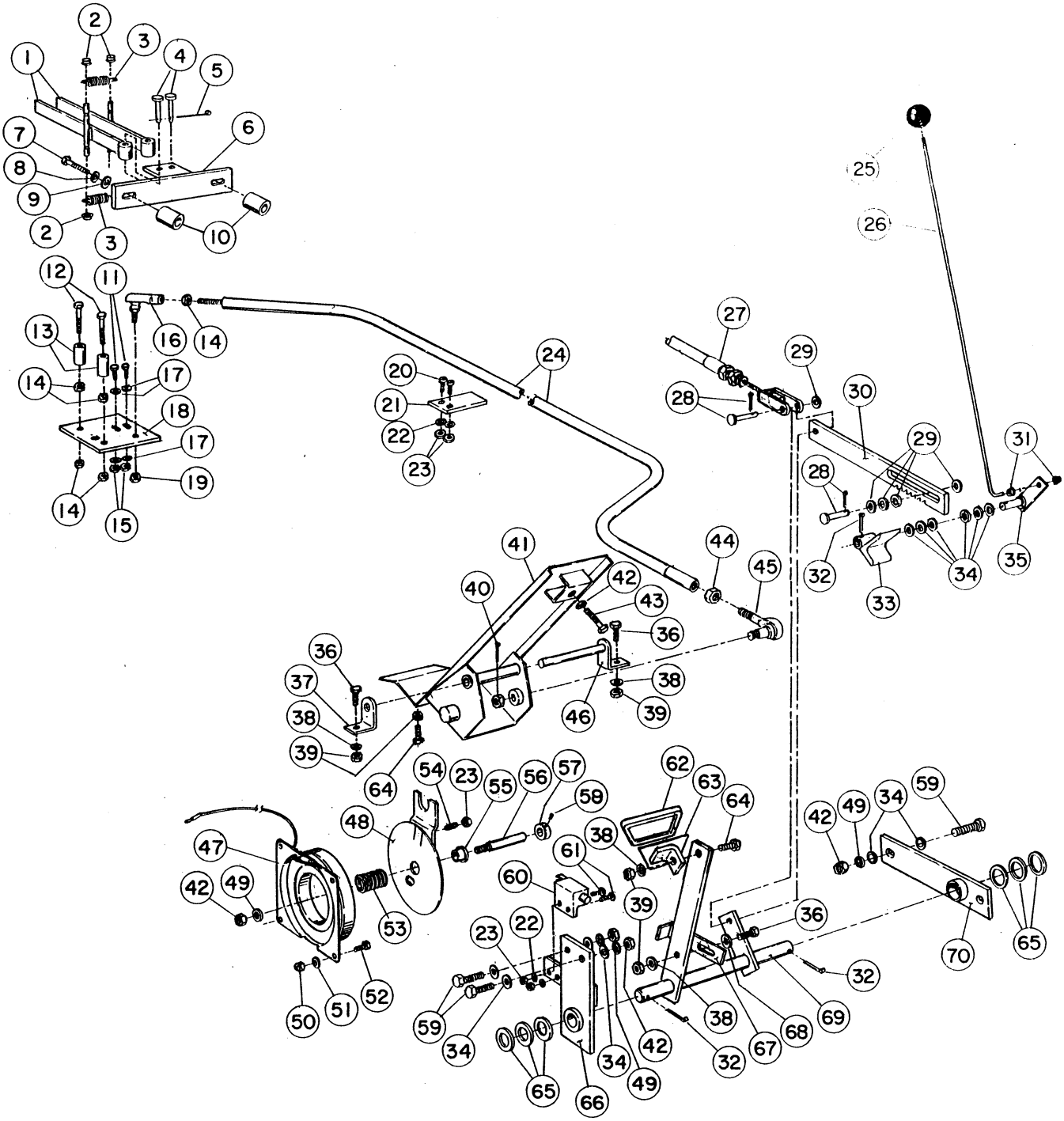

DRIVE LINKAGE (5200)

DRIVE LINKAGE (5200)

REF	PART NO.	DESCRIPTION	QTY
1	92-0460	Arm Assembly	2
	361011	Grease Fitting (f/w 92-0460)	2
2	92-0465	Spring Retainer	4
3	92-0417	Extension Spring	2
4	1049-P	Clevis Pin, 3/8 x 1-5/8"	2
5	28-22-D	Cotter Pin, 1/8 x 2-1/2"	1
6	92-0457	Neutral Mounting Bracket	1
7	92-0467	HHCS 10 MM x 90 MM	2
8	24-11-AD	Flatwasher, 3/8	2
9	23-12-GD	Lock Washer, 7/16	2
10	92-0466	Spacer Tube, 1" O.D. x 11/16"	2
11	20-3-AGD	HHCS, 1/4 NC x 3/4"	2
12	20-51-BGD	HHCS, 3/8 NF x 2"	2
13	92-0455	Bearing, 3/4 O.D. Delrin	2
14	22-13-BJKD	Hex Jam Nut, 3/8 NF	5
15	22-11-AJFD	Lock Nut, 1/4 NC	2
16	41704	Ball Joint	1
17	24-9-BD	Flatwasher, 1/4 S.A.E.	4
18	92-0454	Control Plate	1
19	22-13-BJFD	Lock Nut, 3/8 NF	1
20	21-98-AGOD	Mach. Screw, #10 NC x 5/8"	2
21	92-0453	Teflon Plate	1
22	23-7-GD	Lock Washer, #10	4
23	22-9-AJD	Hex Nut, #10 NC	5
24	92-0451	Linkage Control Rod	1
25	42841	Knob - Brake Lock	1
26	42858	Release Rod Assembly	1
27	41845	Brake Cable Assembly	1
28	40258	Yoke Pin Assy	2
29	24-10-BD	Flatwasher, 5/16	4
30	92-0483	Notcheed Brake Lock	1
31	41723	Push-On Ring	2
32	28-18-D	Cotter Pin, 1/8 x 1"	3
33	41959	Locking Assembly	1
34	24-11-BD	Flatwasher, 3/8 S.A.E.	16
35	42834	Clevis Pin Assembly	1
36	20-24-AGD	HHCS, 5/16 NC x 3/4"	3
37	92-0450	Pivot Pin Bracket	1
38	23-10-GD	Lock Washer, 5/16	3
39	22-12-AJD	Hex Nut, 5/16 NC	5
40	28-10-D	Cotter Pin, 3/32 x 1"	1
41	92-0446	Traction Pedal Assembly	1
	92-0430	Ailite Bearing (f/w 92-0446)	2
	71-0440	Pedal Abrasive - front (3" x 11")	1
	71-0450	Pedal Abrasive - rear (2-5/8" x 1-5/8")	1
42	22-13-AJD	Hex Nut, 3/8 NC	6
43	20-57-AGD	HHCS, 3/8 NC x 3-1/2"	1
44	22-15-BJKD	Hex Jam Nut, 1/2 NF	1
45	21-0140	Socket Assembly (incl. Castle Nut, 3/8 NF)	1
46	92-0448	Pivot Pin Assembly	1
47	42-1720	Fieldcore Coil Assembly	1
48	43-6110	Clutch Plate WA	1
49	23-11-GD	Lock Washer, 3/8	5
50	22-11-AJD	Hex Nut, 1/4 NC	4
51	23-9-GD	Lock Washer, 1/4	4
52	20-2-AGD	HHCS, 1/4 NC x 5/8"	4
53	43-6200	Compression Spring	1
54	3245-31	Hex Hd. Sckt. Set Screw, #10-24 x 1/2	1
55	256-273	Flange Bushing	1
56	69-9170	Cruise Shaft	1
57	43-6320	Collar	1
58	3245-32	Hex Hd. Sckt. Set Screw, 1/4-20 x 1/4	1
59	20-48-AGD	HHCS, 3/8 NC x 1-1/4	4
60	41103	Safety Interlock Switch	1
61	34-99-AMVD	Self-Tap Screw, #10 NC x 3/4	2
62	42719	Brake Pedal Pad	1
63	42716	Brake Pedal Bracket	1
64	20-26-AGD	HHCS, 5/16 NC x 1"	2
65	358042	Special Washer	AR
66	92-0441	Brake Plate Assembly	1
67	92-0476	Swivel Mounting Bracket	1
68	24-10-AD	Flatwasher, 5/16	1
69	92-0439	Brake Shaft Assembly	1
70	92-0444	Support Plate Assy - L.H.	1

HYDRAULICS (5200)

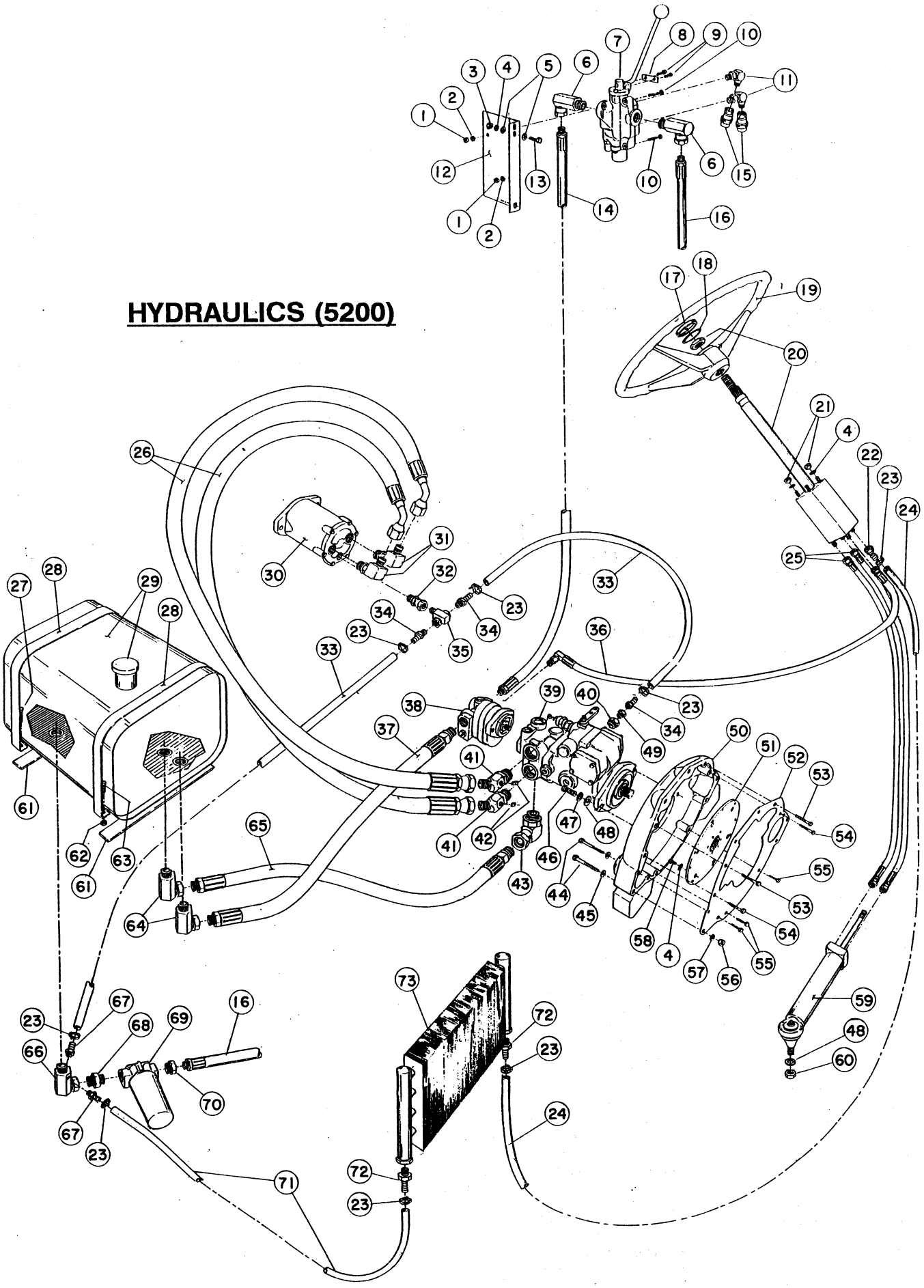

HYDRAULICS (5200)

REF	PART NO.	DESCRIPTION	QTY
1	22-11-AJD	Hex Nut, 1/4 NC	3
2	23-9-GD	Lock Washer, 1/4	3
3	22-12-AJD	Hex Nut, 5/16 NC	2
4	23-10-GD	Lock Washer, 5/16	8
5	24-10-BD	Flat Washer, 5/16 S.A.E.	2
6	41834	90° Swivel Elbow Adapter, 3/4 MPT x 3/4 FPT	2
7	41760	Directional Control Valve	1
	42700	Detente Assembly	AR
	42822	Quad Ring	2
	42823	Valve Handle	1
	92-3953	Knob	1
8	42780	Down Stop	1
9	34-99-AMVD	Hex Hd Self-Tapping Screw, #10 x 3/4"	2
10	20-8-AGD	HHCS, 1/4 NC x 1-3/4	3
11	41835	90° Adaptor, 1/2 MPT	2
12	41998	Valve Mounting Bracket	1
13	20-24-AGD	HHCS, 5/16 NC x 3/4	2
14	41833	Hose (5/8 I.D. x 37") Assy, 3/4 MPT x 7/8 MPT	1
15	41789	Quik Coupler, Female	2
16	42062	Hose (5/8 I.D. x 64") Assy, 3/4 MPT	1
17	41126	Steering Wheel Cap	1
	42961	Decal	1
18	41127	O-Ring	1
19	41125	Steering Wheel	1
20	41756	Steering Gear & Column	1
21	22-12-BJD	Hex Nut, 5/16 NF	4
22	41830	Swivel Barb, 9/16 FPT x 3/8 HB	1
23	96609	Hose Clamp, M6H	8
24	42497	Hose, 3/8 ID x 43" (Steering to Cooler)	1
25	41831	Hose (1/4" ID x 57") Assy, 9/16 FPT x 1/2 FPT	2
26	41821	Hose (1" ID x 76") Assy, 1-1/16 FPT x 1-5/16 FPT	2
27	20-6-AGD	HHCS, 1/4 NC x 1-1/4"	2
28	41994	Tank Strap	2
29	41768	Hydraulic Fluid Tank	1
	41778	Cap (f/w 41768 Tank)	AR
	41779	Hydraulic Strainer (f/w 41768 Tank)	AR
30	41758	Piston Motor	1
	42595	Motor Shaft Seal	AR
31	31837	90° Adaptor, 1-1/16" MPT x 1-5/16" MPT	2
32	92-3650	Swivel Adaptor, 9/16 MPT x 3/8 FPT	1
33	92-3653	Hose, 1/2" I.D. x 31"	2
34	92-3652	Hose Barb, 3/8 MPT x 1/2 HB	4
35	92-3651	Swivel Tee, 3/8 NPT	1
36	41832	Hose (3/8 I.D. x 104") Assy, 9/16 FPT x 3/4 MPT	1
37	42864	Suction Hose, 1" I.D. x 15" (Reservoir to Pump)	1
38	41785	Gear Pump w/ Flow Divider	1
39	92-0349	Piston Pump	1
40	92-0472	Reducer Bushing, 1-1/16 MPT x 1/2 FPT	1
41	92-0428	45° Adaptor, 1-5/16 MPT x 1-1/16 MPT	2
42	92-0470	Pipe Plug, 1/4 MPT	2
43	92-0429	90° Swivel Adaptor, 1-5/16 MPT x 1" FPT	1
44	20-55-AGD	HHCS, 3/8 NC x 3"	2
45	24-11-AD	Flat Washer, 3/8"	2
46	20-87-AGD	HHCS, 1/2 NC x 1-1/2	2
47	23-13-GD	Lock Washer, 1/2	2
48	24-13-AD	Flat Washer, 1/2	2
49	92-3649	Reducer Bushing, 1/2 MPT x 3/8 FPT	1
50	92-0283	Engine Bell Housing	1
51	92-0285	Coupling Assy	1
52	92-0284	Starter Plate	1
53	51-2050	Metric Screw, M10 x 1.5 x 50	2
54	48-7800	Metric Screw, M10 x 1.5 x 40	2
55	48-7770	Metric Scrw, M10 x 1.5 x 20	3
56	22-13-AJD	Hex Nut, 3/8 NC	2
57	23-11-GD	Lock Washer	2
58	42860	Metric Screw, M8 x 1.25 x 16	6
59	27328	Hydraulic Cylinder	1
	28597	Seal and Wiper Kit	AR
60	22-15-BJD	Hex Nut, 1/2 NF	1
61	41995	Armaflex Strip	2
62	22-11-AJFD	Lock Nut, 1/4 NC	4
63	20-3-AD	HHCS, 1/4 NC x 3/4"	2
64	42190	90° Swivel Elbow Assy, 1" MPT x 1" FPT	2
65	92-0474	Suction Hose, 3/4 I.D. x 15" (Reservoir to Pump)	1
66	42654	Adaptor - Modified	1
67	6292	Hose Barb, 1/4 MPT x 3/8 HB	2
68	41828	Close Nipple, 1"	1
69	41762	Hydraulic Filter	1
	41763	Filter Element MPT	AR
70	10215	Reducer Bushing, 1" MPT x 3/4 FPT	1
71	41829	Hose, 3/8 I.D. x 66" (Cooler)	1
72	42774	Hose Barb, 7/8 - 14 x 3/8 HB	2
73	42773	Oil Cooler	1

CONTROLS, GAUGES & ELECTRICAL

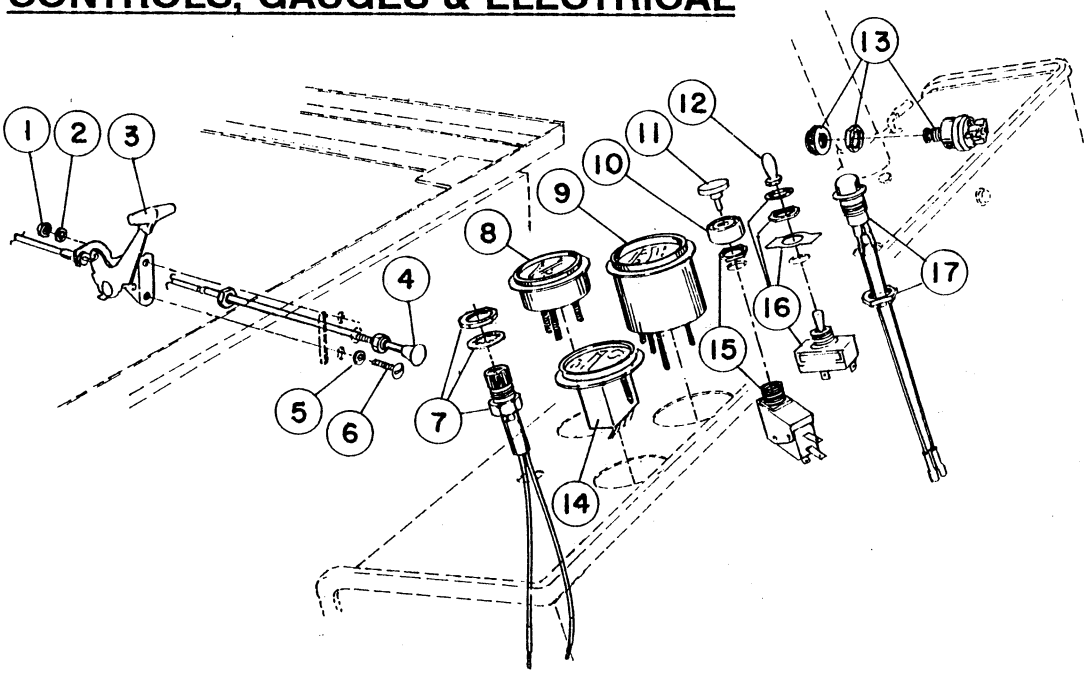

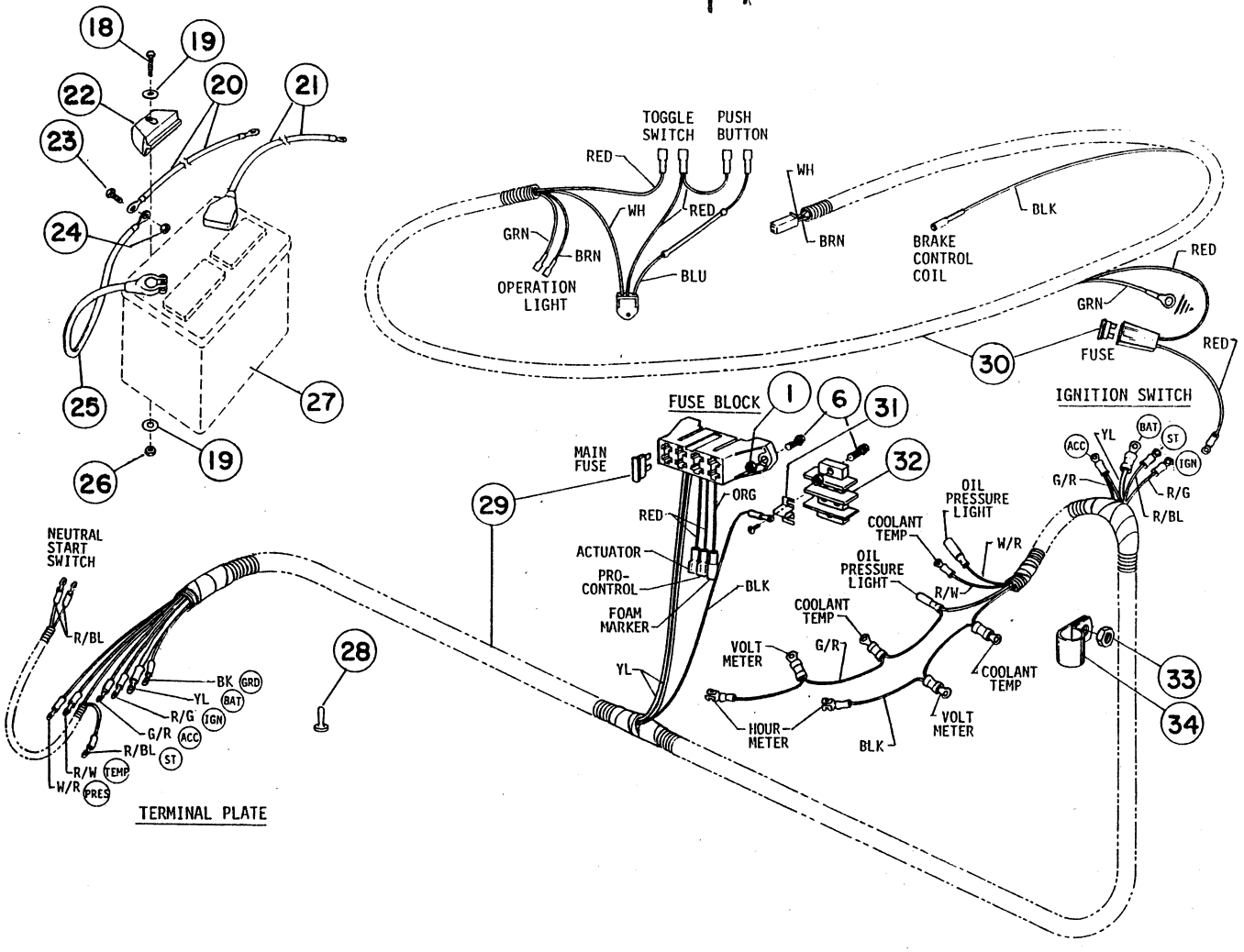

CONTROLS, GAUGES & ELECTRICAL

REF	PART NO.	DESCRIPTION	QTY
1	22-9-AJD	Hex Nut, #10 NC	6
2	23-7-GD	Lock Washer, #10	2
3	42612	Throttle Control Assy	1
4	42611	Choke Control	1
5	24-7-BD	Flat Washer, #10	2
6	34-99-AMVD	Hex Washer Hd Self-Tap Screw, #10 NC x 3/4	6
7	42609	Low Oil Warning Light	1
8	42608	Coolant Temperature Gauge	1
9	42610	Voltmeter	1
10	43-6420	Bezel	1
11	43-6280	Push Button	1
12	30955	Toggle Switch Boot	1
13	42607	Key Switch w/2-coded keys	1
14	66-2950	Hour Meter	1
15	43-6290	Switch	1
16	30953	Toggle Switch	1
17	40-6410	Operation Light	1
18	20-29-AGD	HHCS, 5/16 x 1-3/4	1
19	24-10-AD	Flat Washer, 5/16	2
20	42617	Cable - Ground Engine to Frame	1
21	41792	Cable - Battery to Solenoid	1
	41138	Protective Cap	1
22	66-2490	Battery Retainer	1
23	20-45-AGD	HHCS, 3/8 NC x 3/4	1
24	22-13-AJFD	Lock Nut, 3/8 NC	1
25	99060	Cable - Battery to Ground	1
26	22-12-AJD	Hex Nut, 5/16 NC	1
27		Battery, 12-Volt	1
28	42618	Protective Cap (Terminal Block Studs)	11
29	92-0416	Wiring Harness Assy	1
		Fuse, 30-Amp	1
30	92-0374	Speed Control Wiring Harness	1
		Fuse, 5-Amp	1
31	42863	Jumper Strip - Terminal Block	1
32	42862	Terminal Block - Ground	1
33	22-11-AJD	Hex Nut, 1/4 NC	2
34	41230	Cable Clamp	2

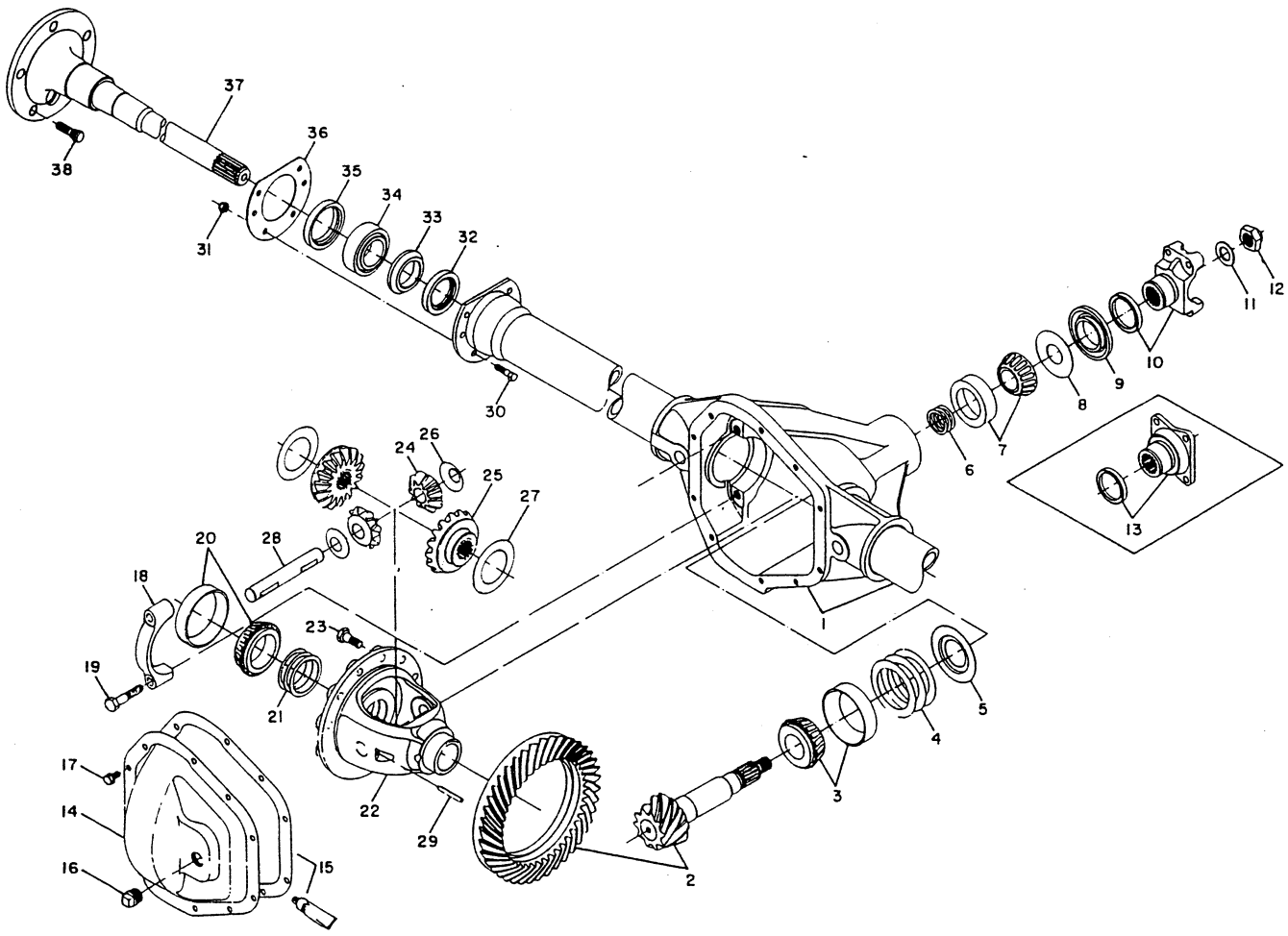

REAR AXLE (41977)

REAR AXLE (41977)

REF	PART NO.	DESCRIPTION	QTY
1	92-8100	Housing - Axle (includes items 18 & 19)	1
2	92-8101	Drive Gear and Pinion	1
3	92-8102	Inner Pinion Bearing	1
4	92-8103	Shim Kit (includes items 4,6,11,12,15 & 21)	1
5	92-8104	Baffle - Pinion Bearing	1
6		Shim-Pinion Bearing Adjusting (included in item 4)	
7	92-8105	Outer Pinion Bearing	1
8	92-8106	Slinger-Pinion Bearing Outer	1
9	92-8107	Seal - Pinion	1
10	92-8108	End Yoke Assembly	1
11	92-8109	Washer - Pinion Nut	1
12	92-8110	Nut-Pinion	1
13		Companion Flange Assembly (not applicable)	
14	92-8111	Cover - Carrier	1
15	92-8112	Carrier Cover Gasket and RTV Sealant	1
16	92-8113	Plug Cover	1
17	92-8114	Bolt - Carrier Cover	10
18		Cap - Differential Bearing (included in item 1)	
19	92-8115	Bolt - Differential Cap	4
20	92-8116	Differential Bearing	1
21		Shim - Differential Bearing (included in item 4)	
22	92-8117	Case - Differential	1
23	92-8118	Bolt - Drive Gear	12
24	92-8119	Pinion - Differential	2
25	92-8120	Gear Differential	2
26	92-8121	Thrust Washer - Differential Pinion	2
27	92-8122	Thrust Washer - Differential Gear	2
28	92-8123	Shaft - Differential	1
29	92-8124	Lock - Differential Shaft	1
30	92-8125	Bolt - Axle Shaft Retaining	12
31	92-8126	Nut - Axle Shaft Retaining	12
32	92-8127	Seal - Shaft Inboard	2
33	92-8128	Ring-Wheel Bearing Retaining	2
34	92-8129	Axle Shaft Bearing Assembly	2
35	92-8130	Seal - Shaft Outboard	2
36A	92-8131	Retainer - Oil Seal	2
36B	92-8132	Spacer - Oil Seal Retainer	2
37	92-8133	Shaft - Axle Flanged	2
38	92-8134	Bolt - Wheel	10

MAINTENANCE RECORD

Date								

MAINTENANCE RECORD

Date								

MAINTENANCE RECORD

Date								