Form No. 3351–668

# Hydraulic Control Float Kit

## Workman Vehicle w/Serial Numbers 240000001 & Up

**Part No. 107–8004**

## Installation Instructions

**1.** Raise the bed.

**2.** Stop the engine, set the parking brake and remove the key from the ignition switch.

**3.** Install the safety support onto the fully extended lift cylinder rod (if so equipped).

**4.** Disconnect the hose from the 90° fitting mounted to the **front** of the transaxle hydraulic filter head (Fig. 1). Plug the hose to prevent debris from contaminating the hydraulic system during the installation of the other components.

**5.** Remove the 90° fitting from the filter head (Fig. 1).

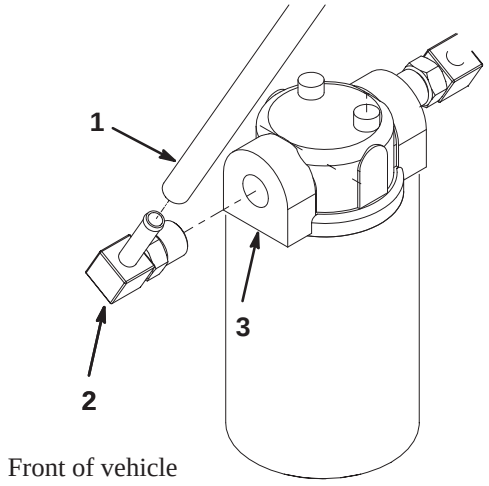


**Figure 1**

1. Hydraulic hose
2. 90 ° fitting
3. Hydraulic filter head

**6.** Install the new 90° fitting into the filter head, positioning as shown in figure 2.

**Note:** Make sure the O–rings are lubricated and positioned correctly in the hydraulic fittings.

**7.** Install the new tee fitting into the new 90° fitting (Fig. 2).

**8.** Install the barbed fitting into the tee fitting (Fig. 2).

**9.** Install the previously removed hose onto the barbed fitting. The hose clamp is not required.

**10.** Connect the hose assembly to the tee fitting (Fig. 2).

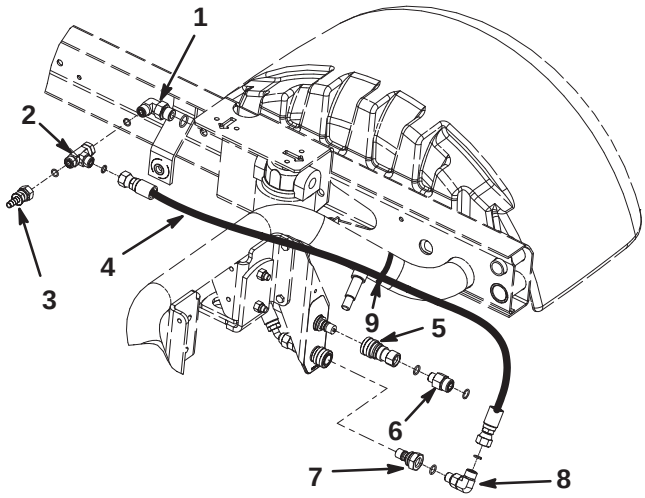


**Figure 2**

1. 90° Fitting
2. Tee fitting
3. Barbed fitting
4. Hose assembly
5. Female quick coupler
6. Straight fitting
7. Male quick coupler
8. 90° Fitting
9. Cable tie

**11.** Install the 90° fitting and the male quick coupler to the hose assembly (Fig. 2). Route the hose assembly over the rear frame tube and secure it to the tube with a cable tie.

PROTOTYPE

**12.** Remove the safety support from the lift cylinder rod and lower the bed. With the engine off, cycle the remote hydraulics control lever back and forth a couple of times to release the pressure to lines.

**13.** Disconnect the two bed lift hoses from the quick couplers (Fig. 3). Cover the bed lift hose fittings with the coupler caps.

© 2004 by The Toro Company
8111 Lyndale Avenue South
Bloomington, MN 55420-1196



All Rights Reserved
Printed in the USA

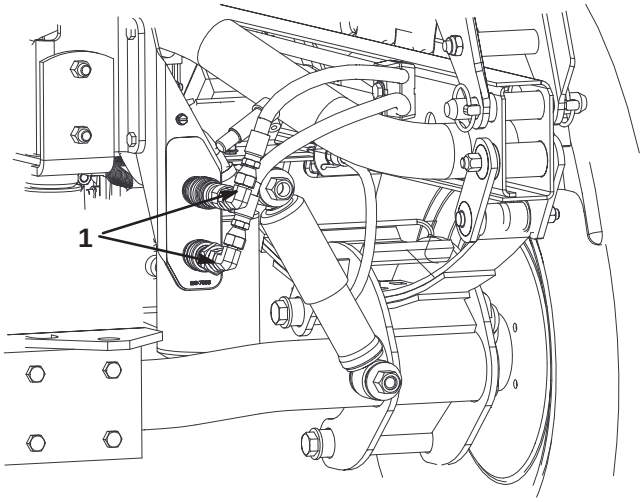


**Figure 3**

1. Bed lift hoses

---

**14.** Plug the male quick coupler of the new hose assembly into the lower (female fitting) quick coupler on the vehicle (Fig. 2).

**15.** Install the female quick coupler and the straight fitting to the hose from the single acting cylinder of the attachment (Fig. 2). This will connect to the upper (male fitting) quick coupler on the vehicle.

**16.** Replenish any lost hydraulic fluid.

**17.** Tighten all fittings and check for leaks.

PROTOTYPE