Form No. 3407-832 Rev C

TORO®

Count on it.

Parts Catalog

Rear Roller Brush Kit

Reelmaster® 3100-D or 7000-D Edge Series Cutting Unit with Universal Groomer

Model No. 03242

Register at www.Toro.com.
Original Instructions (EN)

CE

3407-832 C

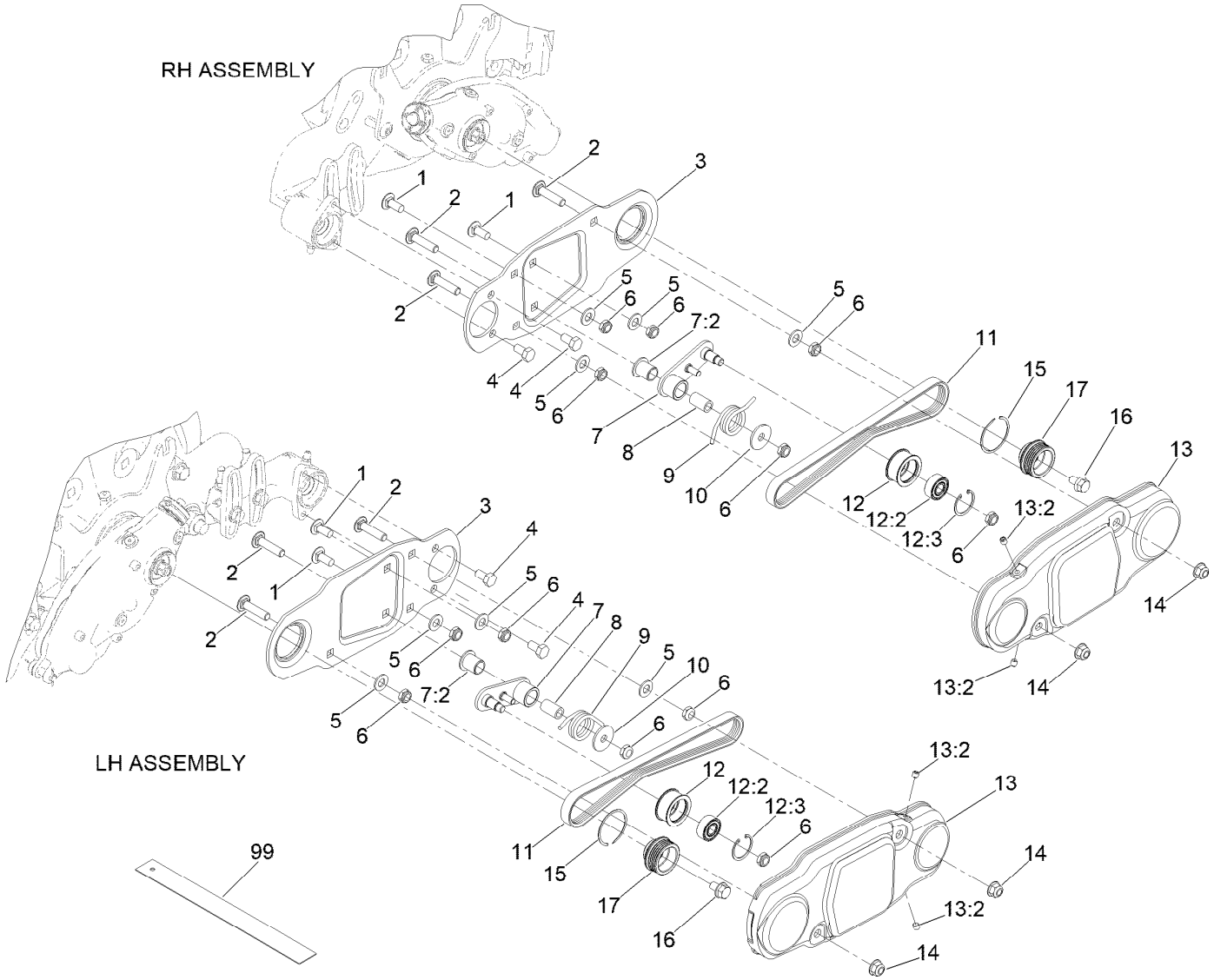

Plate Assembly

Ref.	Part Number	Qty.	Description
1	3230-23	2	Bolt-CARR
2	112-6950	3	Screw-CARR
3	120-2851-03	1	Plate-Drive, 7 Inch
4	322-2	2	Screw-HH
5	3256-45	4	Washer-Flat
6	3296-47	6	Nut-Lock,NI
7	115-0834	1	Idler Arm ASM
7:2	125-8775	1	Bushing-Flange
8	115-0826	1	Spacer-Idler
9	115-0839	1	Spring-Idler
10	5-4460	1	Washer-Pivot

Ref.	Part Number	Qty.	Description
11	115-0833	1	Belt-Brush, 7 Inch
12	114-9397	1	Idler Pulley ASM
12:2	110-1701	1	Bearing
12:3	32151-60	1	Ring-Snap
13	115-0830	1	Brush Cover ASM
13:2	108-0989	2	Screw-Set
14	104-8300	2	Nut-HF, NI
15	131-1880	1	Ring-Retaining, EXT
16	100-1719	1	Screw-Flange
17	120-2852	1	Pulley-Drive, 7 Inch
99	114-5446	1	Tool-Alignment

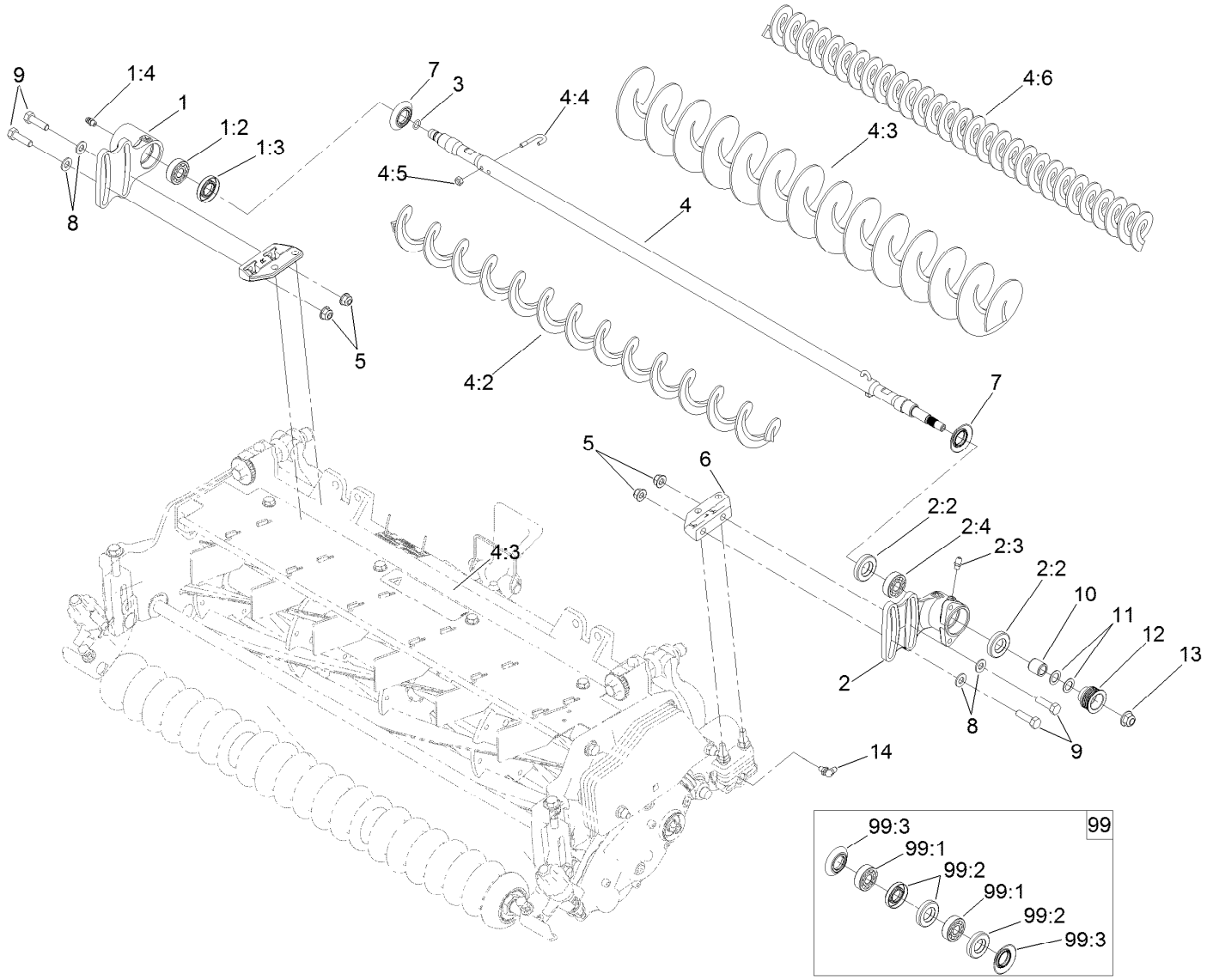

Roller Brush Assembly

Ref.	Part Number	Qty.	Description
1	127-7134	1	Non Driven Bearing Housing ASM
1:2	95-0707	1	Bearing-Aligning, Self
1:3	106-8530	1	Seal-Grease
1:4	302-5	1	Fitting-Grease
2	131-1893	1	7 Inch Bearing Housing ASM
2:2	106-8530	2	Seal-Grease
2:3	302-5	1	Fitting-Grease
2:4	95-0707	1	Bearing-Aligning, Self
3	107-8844	1	O-Ring
4	115-0811	1	Roller Brush ASM (27In)
4:2	115-0813	1	Brush-Roller
4:3	115-0838	1	Brush-Roller (High HOC) ●
4:4	105-9632	2	Bolt-J
4:5	3296-2	2	Nut-Lock, NI

Ref.	Part Number	Qty.	Description
4:6	137-0844	1	HD Brush-Rear Roller (27In)
5	104-8300	4	Nut-HF, NI
6	108-4480	2	Bracket-Mounting
7	108-4172	2	Seal-Excluder
8	94-6936	4	Washer-Hard
9	322-16	4	Screw-HH
10	108-4491	1	Spacer
11	112-6957	2	Washer-Hardened
12	115-0821	1	Pulley-Driven, RRB (5-Rib)
13	104-8301	1	Nut-HF, NI
14	104-1843	1	Fitting-Grease, 90 DEG
99	131-3233	1	Groomer/RRB Seal Kit ●
99:1	95-0707	2	Bearing-Aligning, Self
99:2	106-8530	3	Seal-Grease
99:3	108-4172	2	Seal-Excluder

● Optional Equipment



Count on it.