Form No. 3483-284 Rev A

TORO®

Count on it.

Operator's Manual

F60 Flail Mower

Groundsmaster® 3200 or 3300 Series All-Wheel Drive Traction Unit

Model No. 02835—Serial No. 421000000 and Up

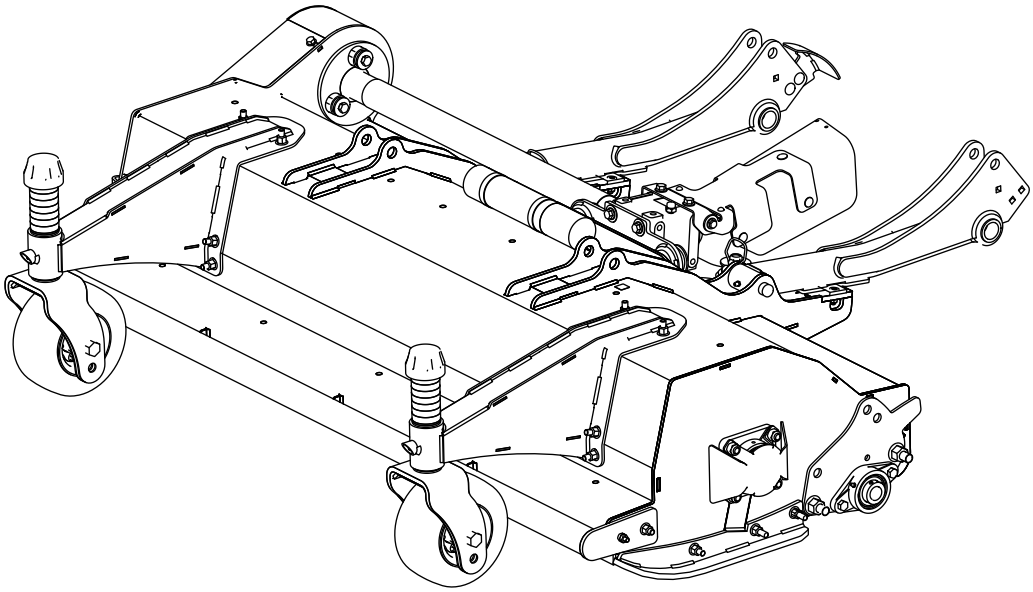

Register at www.Toro.com.
Original Instructions (EN)

CE UK CA

3483-284

This product complies with all relevant European directives. For details, please see the Declaration of Incorporation (DOI) at the back of this publication.

⚠ WARNING

CALIFORNIA
Proposition 65 Warning

Use of this product may cause exposure to chemicals known to the State of California to cause cancer, birth defects, or other reproductive harm.

Introduction

This flail-blade lawn cutting deck is mounted to a ride-on machine and is intended to be used by professional, hired operators in commercial applications. It is primarily designed for cutting grass on well-maintained lawns in parks, sports fields, and on commercial grounds. Using this product for purposes other than its intended use could prove dangerous to you and bystanders.

Read this information carefully to learn how to operate and maintain your product properly and to avoid injury and product damage. You are responsible for operating the product properly and safely.

Visit www.Toro.com for product safety and operation training materials, accessory information, help finding a dealer, or to register your product.

Whenever you need service, genuine Toro parts, or additional information, contact an Authorized Service Dealer or Toro Customer Service and have the model and serial numbers of your product ready. Figure 1 identifies the location of the model and serial numbers on the product. Write the numbers in the space provided.

Important: **With your mobile device, you can scan the QR code (if equipped) on the serial number plate to access warranty, parts, and other product information.**

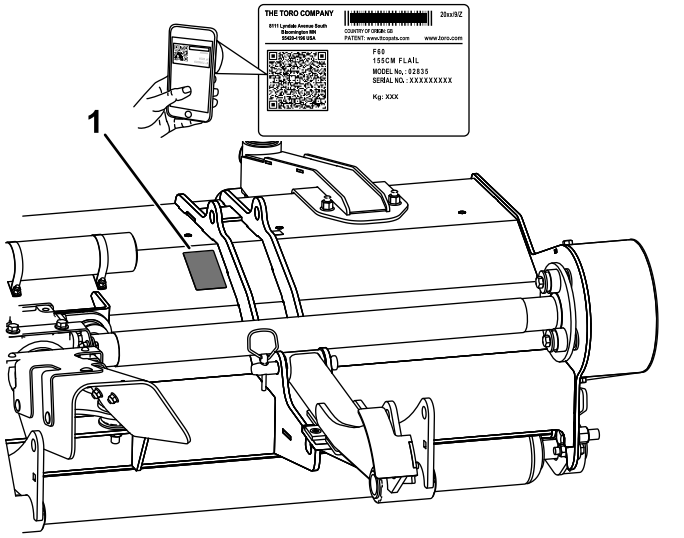

g411963

Figure 1

1. Model and serial number location

Model No. _____

Serial No. _____

This manual identifies potential hazards and has safety messages identified by the safety-alert symbol (Figure 2), which signals a hazard that may cause serious injury or death if you do not follow the recommended precautions.



g000502

Figure 2
Safety-alert symbol

This manual uses 2 words to highlight information. **Important** calls attention to special mechanical information and **Note** emphasizes general information worthy of special attention.

© 2026—The Toro® Company

All Rights Reserved

Contents

Safety 4
General Safety 4
Cutting Unit Safety 4
Blade Safety 4
Safety and Instructional Decals 5
Setup 7
1 Preparing the Machine 7
2 Assembling the Caster Arms and Casters to the Cutting Unit 8
3 Installing the Debris Guard to the Front Axle 9
4 Installing the Cutting Unit to the Machine 9
5 Installing the Debris Skirt to the Traction Unit 12
6 Installing the PTO Guard 13
7 Adjusting the Sensor Plate 13
8 Adjusting the Weight Transfer 14
9 Checking the Gearbox Lubricant 14
10 Checking the Caster Tire Pressure 14
11 Greasing the Cutting Unit 14
12 Engaging the Turnaround Mode 14
13 Reducing the Engine Speed before PTO Engagement 15
14 Installing Spacers to the Front Frame 15
Product Overview 17
Specifications 17
Attachments/Accessories 17
Operation 17
Cutting Unit General Information 17
Adjusting the Height of Cut 17
Inspecting the Blades 18
Operating Tips 19
Maintenance 20
Recommended Maintenance Schedule(s) 20
Daily Maintenance Checklist 21
Lubricating the Cutting Unit 22
Checking the Lubricant in the Gearbox 23
Changing the Lubricant in the Gearbox 23
Checking the Belt Tension 24
Checking the Belt Drive and Taper Lock Hardware 25
Removing the Cutting Unit from the Machine 25
Servicing the Bushings in the Caster Arms 26
Servicing the Caster Wheels and Bearings 26
Checking the Blade Bolts 27
Checking the Front Flaps 27
Clearing a Blocked Rotor 27
Checking the Caster Tire Pressure 27
Checking for Rotor Vibration 27
Checking the Rotor Bearings 28
Checking the Debris Skirt 28
Sharpening the Blades 28
Replacing the Blades 29
Cleaning Under the Cutting Unit 29
Storage 30

Safety

General Safety

This product is capable of amputating hands and feet. Always follow all safety instructions to avoid serious personal injury.

- Read and understand the contents of this *Operator's Manual* before starting the machine.
- Use your full attention while operating the machine. Do not engage in any activity that causes distractions; otherwise, injury or property damage may occur.
- Do not put your hands or feet near moving components of the machine.
- Do not operate the machine without all guards and other safety protective devices in place and functioning properly on the machine.
- Keep clear of any discharge opening.
- Keep bystanders and children out of the operating area. Never allow children to operate the machine.
- Before you leave the operator's position, do the following:
  - Park the machine on a level surface.
  - Lower the cutting unit(s).
  - Disengage the drives.
  - Engage the parking brake (if equipped).
  - Shut off the engine and remove the key.
  - Wait for all movement to stop.

Improperly using or maintaining this machine can result in injury. To reduce the potential for injury, comply with these safety instructions and always pay attention to the safety-alert symbol ⚠, which means Caution, Warning, or Danger—personal safety instruction. Failure to comply with these instructions may result in personal injury or death.

Cutting Unit Safety

- The cutting unit is only a complete machine when installed on a traction unit. Read the traction unit *Operator's Manual* carefully for complete instructions on the safe use of the machine.
- Stop the machine, remove the key (if equipped), lower the cutting unit, and wait for all movement to stop before inspecting the attachment after striking an object or if there is an abnormal vibration in the machine. Make all necessary repairs before resuming operation.
- Keep all parts in good working condition and all hardware tightened. Replace all worn or damaged decals.
- Use only accessories, attachments, and replacement parts approved by the manufacturer.

Blade Safety

A worn or damaged blade can break, and a piece of the blade could be thrown toward you or bystanders, resulting in serious personal injury or death.

- Inspect the blades periodically for wear or damage.
- Use care when checking the blades. Wrap the blades or wear gloves, and use caution when servicing the blades. Only replace or sharpen the blades.

Safety and Instructional Decals

Safety decals and instructions are easily visible to the operator and are located near any area of potential danger. Replace any decal that is damaged or missing.

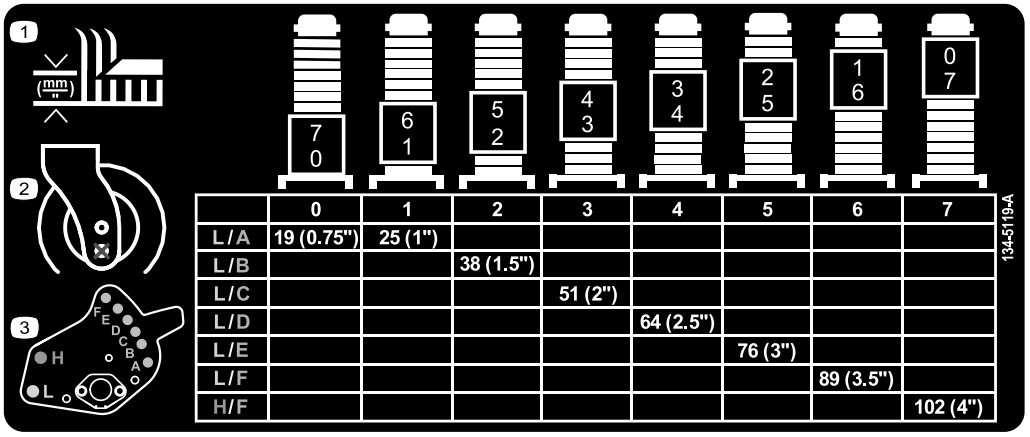

	0	1	2	3	4	5	6	7
L/A	19 (0.75")	25 (1")						
L/B			38 (1.5")					
L/C				51 (2")				
L/D					64 (2.5")			
L/E						76 (3")		
L/F							89 (3.5")	
H/F								102 (4")

decal134-5119

134-5119

1. Height of cut
2. Do not use the lower mounting hole.
3. Mounting hole locations

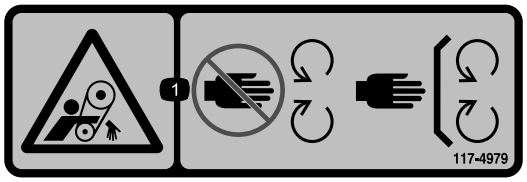

decal117-4979

117-4979

1. Entanglement hazard, belt—keep away from moving parts; keep all guards and shields in place.

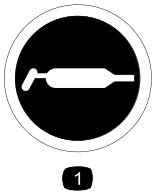

decal58-6520

58-6520

1. Grease



decal111-9648

111-9648

1. Warning—read the *Operator's Manual*; torque the nuts to 45 N·m (33 ft-lb).

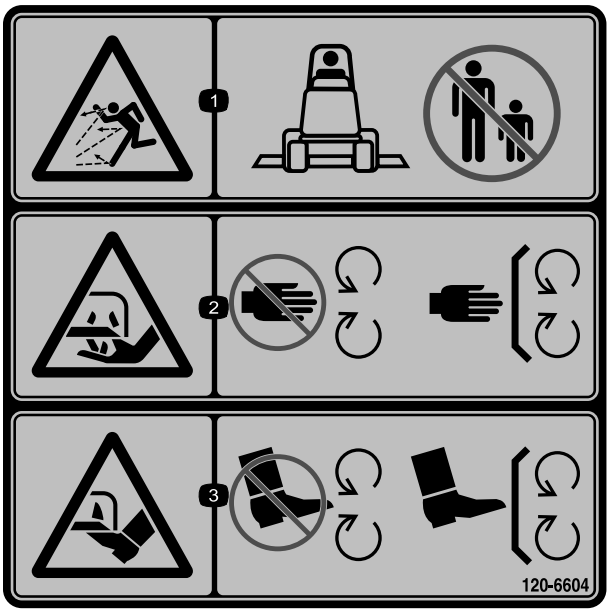

decal120-6604

120-6604

1. Thrown object hazard—keep bystanders away from the machine.
2. Cutting/dismemberment hazard of hand, mower blade—stay away from moving parts; keep all guards and shields in place.
3. Cutting/dismemberment hazard of foot, mower blade—stay away from moving parts; keep all guards and shields in place.

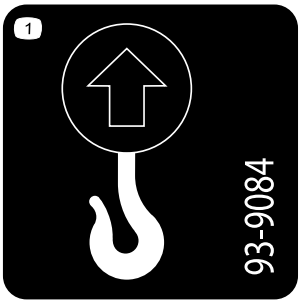

decal93-9084

93-9084

1. Lift point/Tie-down point



decal133-8061

133-8061



decal93-6697

93-6697

1. Read the *Operator's Manual*.
2. Add SAE 80w-90 (API GL-5) oil every 50 hours.

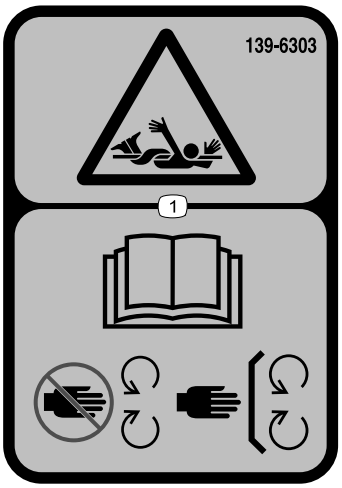

decal139-6303

139-6303

1. Entanglement hazard—read the *Operator's Manual*; stay away from moving parts; keep all guards and shields in place.

Setup

1

Preparing the Machine

No Parts Required

Procedure

Note: Retain all removed parts unless otherwise noted.

1. Park the machine on a level surface, disengage the PTO, move the lift arms to the lowest position, engage the parking brake, shut off the engine, and remove the key.
2. Wait for all movement to stop and allow the machine to cool before adjusting, cleaning, storing, or repairing it.
3. If a cutting unit is equipped, remove the cutting unit from the machine lift arms; refer to your cutting unit *Operator's Manual*.
4. Ensure that the PTO driveshaft is aligned correctly; refer to the PTO-driveshaft alignment procedure in your traction unit *Operator's Manual*.

   Important: **If the markings on the driveshaft are not aligned, severe imbalance may occur in the driveline system.**
5. If the lift arms for the rotary cutting unit are installed on the traction unit, remove the lift arms as follows:
   A. Raise the front of the machine and remove the front wheels from the machine; refer to your traction unit *Operator's Manual*.
   B. Remove the 3 carriage bolts and 3 nuts (3/8 inch) that secure the sensor plate to the right lift arm (Figure 3).
   C. Remove the 2 bolts (3/8 x 1-1/4 inches), 2 nuts (3/8 inch), and 2 small pins that secure the lift arms to the cylinders (Figure 3).
   D. Remove the nut and bolts securing the large pins to the lift arms as shown in Figure 4.
   E. Remove the lift arms and large pins from the machine frame (Figure 5).

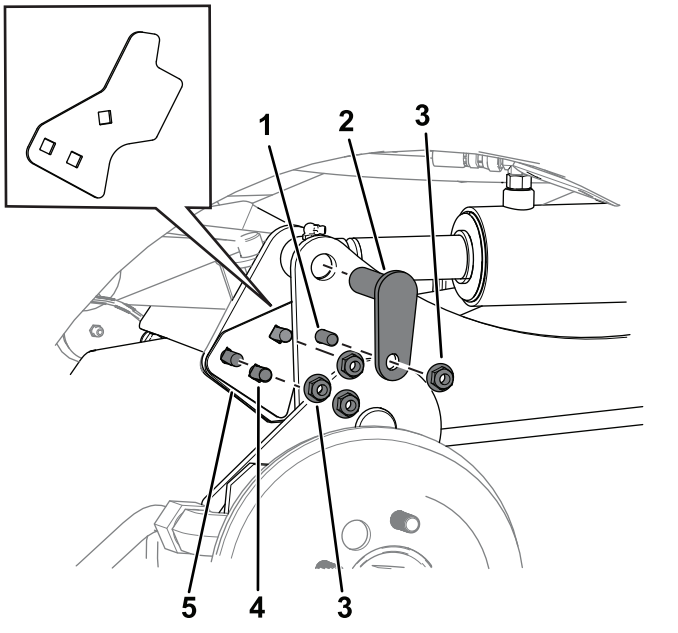

g620402

Figure 3

1. Bolt (3/8 x 1-1/4 inches)
2. Small pin
3. Nut (3/8 inch)
4. Carriage bolt
5. Sensor plate

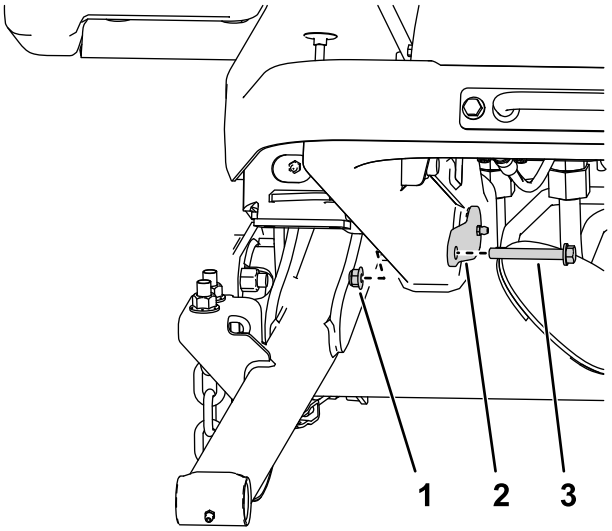

g295767

Figure 4

Right side shown

1. Nut
2. Large pin
3. Bolt

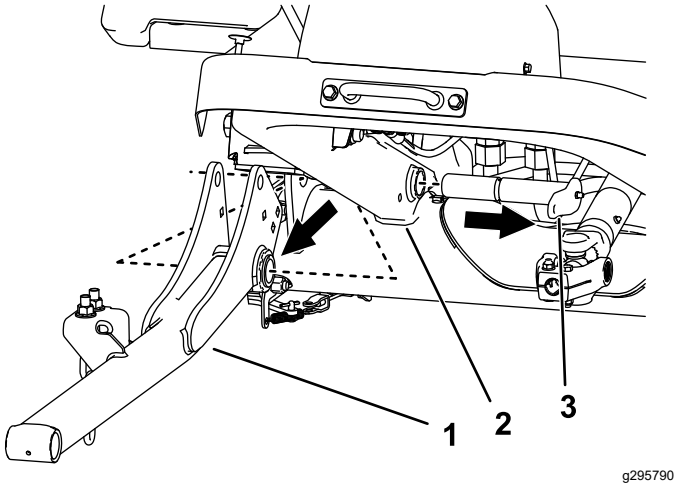

Figure 5

1. Lift arm
2. Machine frame
3. Large pin

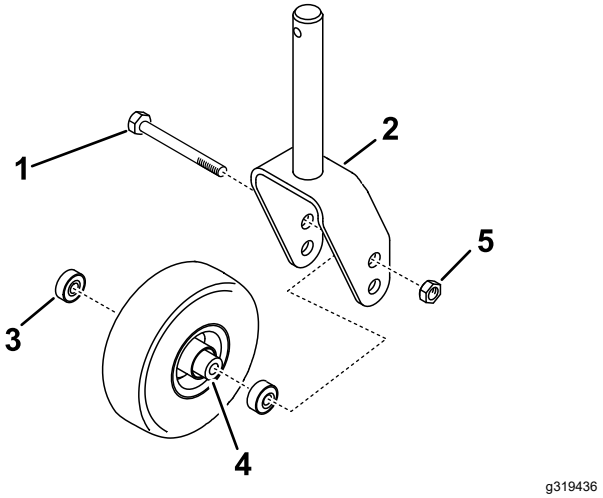

Figure 6

1. Castor bolt
2. Castor fork
3. Bearing
4. Bearing spacer
5. Large locknut

2

Assembling the Caster Arms and Casters to the Cutting Unit

Parts needed for this procedure:

2	Castor fork
2	Castor bolt
4	Bearing
2	Bearing spacer
2	Large locknut
2	Caster arm
12	Carriage bolt (M10)
12	Locknut (M10)
2	Tensioning cap
14	HoC spacers
4	Shim

Procedure

1. Assemble the caster wheels to the castor fork as shown in Figure 6.

   Note: Use only the upper axle shaft hole; do not adjust the position of the caster wheel.

2. Assemble each caster arm to the cutting unit with 6 carriage bolts (M10) and 6 locknuts (M10) as shown in Figure 7; torque the locknuts to 47 to 57 N·m (34 to 42 ft-lb).

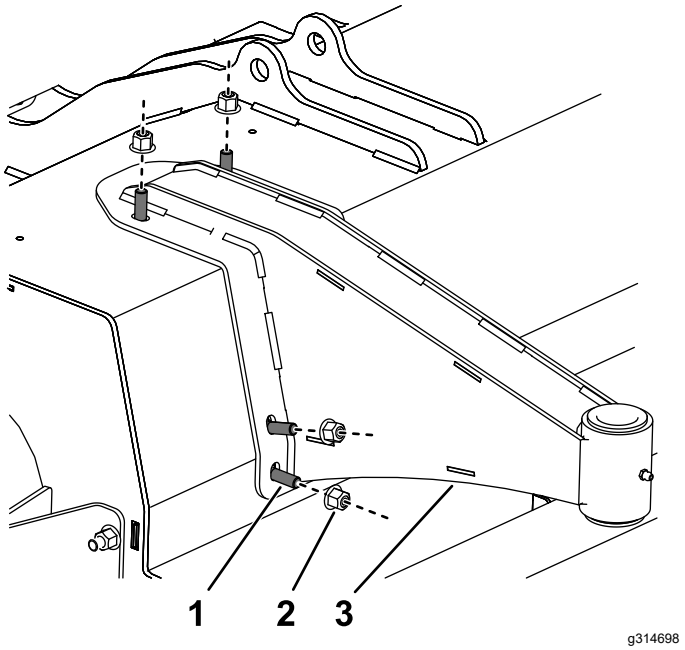

Figure 7
Left side shown

1. Carriage bolt
2. Locknut
3. Caster arm

3. Assemble the casters to the cutting unit with a shim on both sides of the caster shaft hub as shown in Figure 8.

   Note: You can adjust the height-of-cut setting by changing the amount of spacers on either side of the caster shaft hub; refer to Adjusting the Height of Cut (page 17).

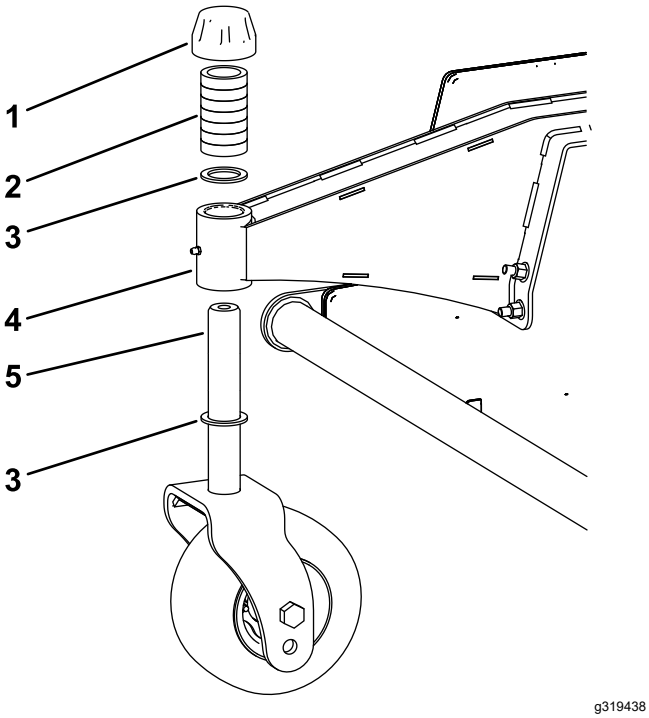

Figure 8

1. Tensioning cap
2. HoC spacers
3. Shim
4. Caster shaft hub
5. Caster wheel shaft

4. Ensure that the deck is level; move the deck to a level surface and place a level horizontally across the top of the deck.
5. If the deck is not level, position the shims on the caster shaft accordingly until it is level.

3

Installing the Debris Guard to the Front Axle

Parts needed for this procedure:

1	Debris guard
1	Bracket
5	Rivet

Procedure

Use 5 rivets to install the bracket and debris guard to the front axle (Figure 9).

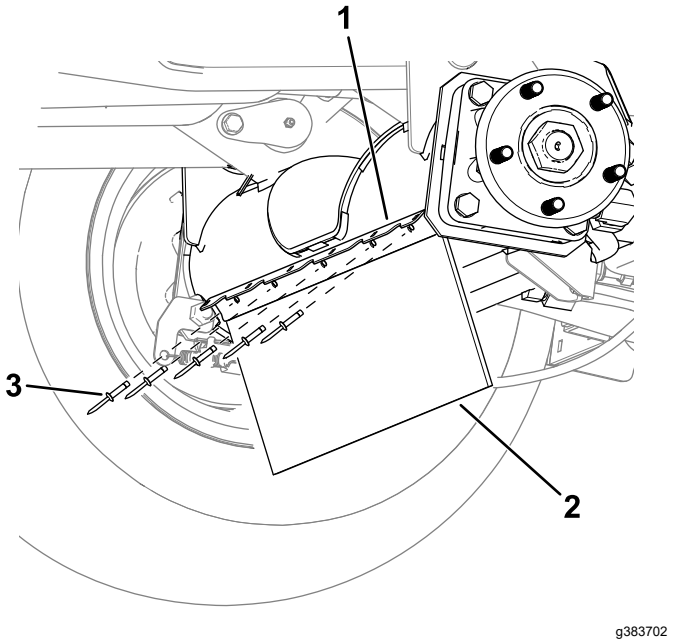

Figure 9

Left side shown

1. Bracket
2. Debris guard
3. Rivet

4

Installing the Cutting Unit to the Machine

Parts needed for this procedure:

2	Lift arm
2	Large pin
2	Long bolt (3/8 x 2-3/4 inches)
6	Nut (3/8 inch)
2	Small pin
2	Bolt (3/8 x 1-1/4 inches)
2	Carriage bolt (3/8 x 1-1/4 inches)
2	Socket-head capscrew (3/8 x 2-1/4 inches)
2	Washer (3/8 inch)
2	Flange-locknut (3/8 inch)
2	Lift arm pin
2	Lynch pins
1	Sensor plate

Procedure

1. Raise the front of the machine and remove the front tires from the machine; refer to your traction unit *Operator's Manual*.
2. Install the lift arms and large pins to the machine frame (Figure 10).

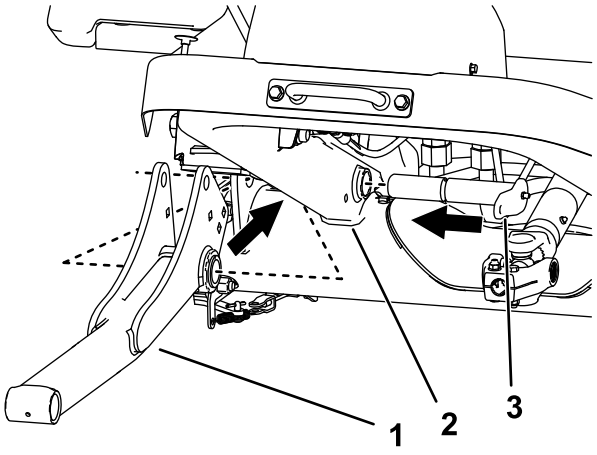

Figure 10
Right side shown

1. Lift arm
2. Machine frame
3. Large pin

3. Secure the large pin to the lift arm using a pair of nuts and bolts as shown in Figure 11.

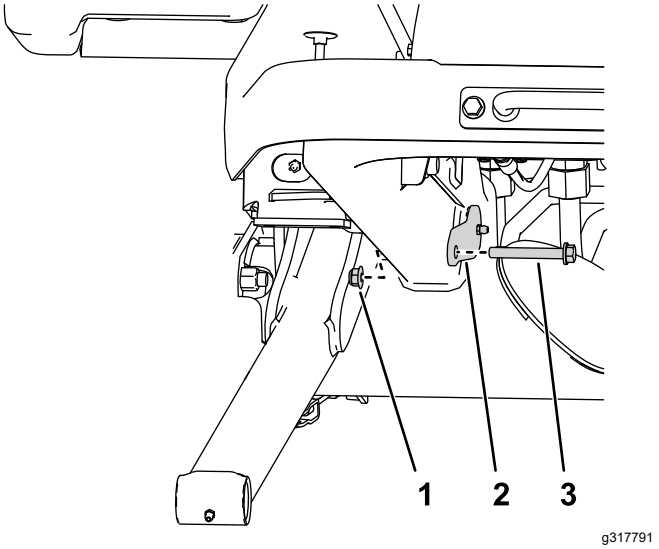

Figure 11

1. Nut (3/8 inch)
2. Large pin
3. Long bolt (3/8 x 2-3/4 inches)

4. Secure each cylinder-rod end to the each lift arms with a small pins, bolts (3/8 x 1-1/4 inches), and nut (3/8 inch) as shown in Figure 12.

   Note: Manually rotate the lift arm to align it with the cylinder-rod end.
5. Secure the sensor plate to the right lift arm using 3 carriage bolts and 3 nuts (3/8 inch) as shown in Figure 12.

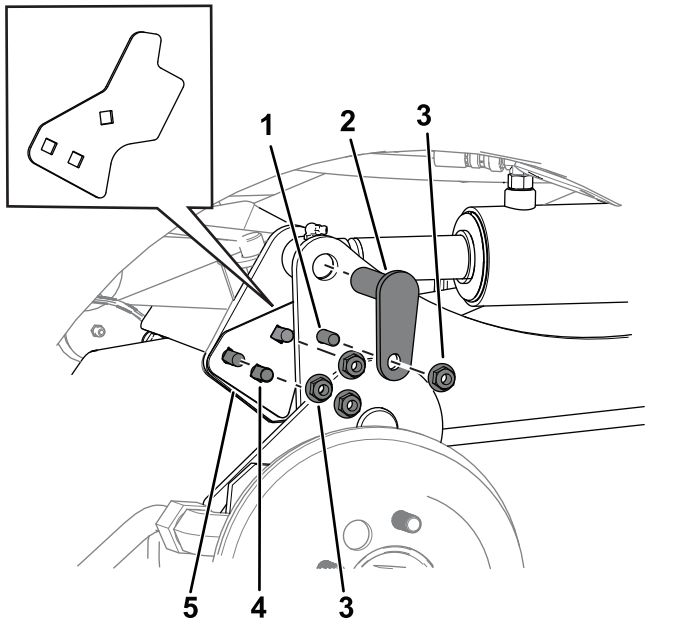

g620402

Figure 12

1. Bolt (3/8 x 1-1/4 inches)
2. Small pin
3. Nut (3/8 inch)
4. Carriage bolt
5. Sensor plate

6. Ensure that the sensor plate does not interfere with the sensor; refer to 7 Adjusting the Sensor Plate (page 13).

   When installing the sensor plate, rotate the bracket up (as shown in Figure 12) before clamping.

7. Align the cutting unit in front of the machine frame and PTO shaft.
8. Perform the following steps to install the PTO shaft to the cutting unit:

   A. Install the PTO shaft yoke to the cutting unit gearbox shaft as shown in Figure 13.

   B. Assemble a socket-head capscrew (3/8 x 2-1/4 inches) through a washer (3/8 inch) and the hole in the driveshaft yoke (Figure 13), and secure the capscrew with a flange-locknut (3/8 inch).

   C. Assemble a socket-head capscrew (3/8 x 2-1/4 inches) through a washer (3/8 inch) and the hole in the driveshaft yoke from the opposite direction (Figure 13), and secure the capscrew with a flange-locknut (3/8 inch).

   D. Incrementally torque the locknuts to 61 N·m (45 ft-lb) in an alternating pattern.

      Important: **Ensure the PTO shaft yoke bolts are tightened to the specified torque. Failure to properly torque the bolts results in premature failure of critical parts.**

      Important: **Whenever you remove the PTO shaft from the gearbox, use new capscrews and locknuts to secure the shaft to the gearbox.**

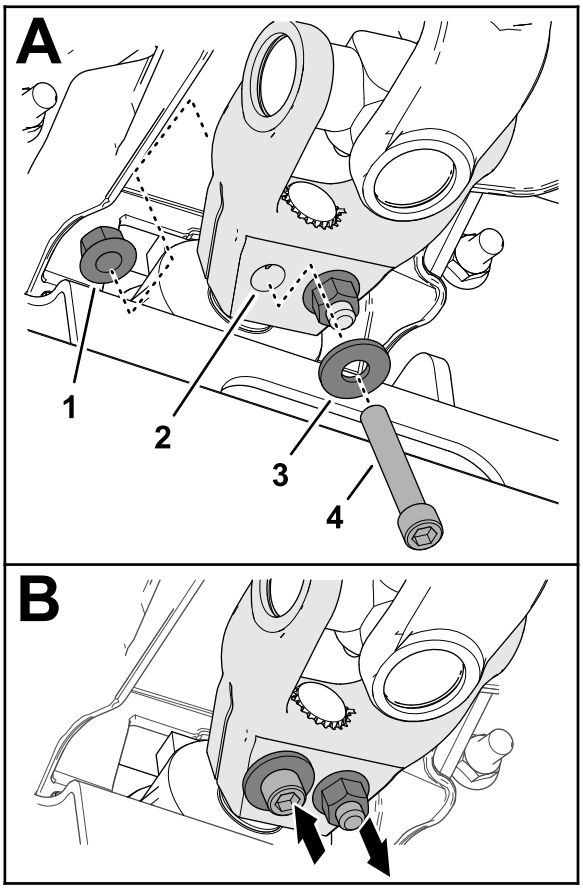

g340626

Figure 13

1. Flange-locknut (3/8 inch)
2. Driveshaft yoke
3. Washer (3/8 inch)
4. Socket-head capscrew (3/8 x 2-1/4 inches)

9. Secure the flail to the lift arms using the lift arm pins and lynch pins (Figure 30).

5

Installing the Debris Skirt to the Traction Unit

Parts needed for this procedure:

1	Flap mount
6	Carriage bolt (M8)
6	Flange nut (M8)

Procedure

Use 6 carriage bolts (M8), 6 flange nuts (M8), and the flap mount to secure the debris skirt to the axle bracket.

Note: For easier access to this area, you may remove a front wheel or both front wheels. Refer to the Setup section in the traction unit *Operator's Manual* for wheel removal and installation instructions.

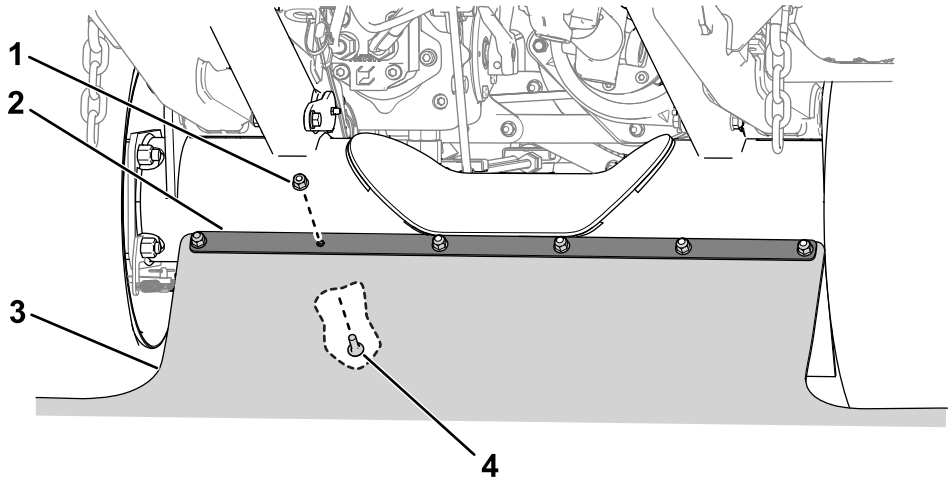

g383966

Figure 14

1. Flange nut (M8)
2. Flap mount
3. Debris skirt
4. Carriage bolt (M8)

6

Installing the PTO Guard

Parts needed for this procedure:

1	PTO guard assembly
2	Screw (3/8 x 3/4 inch)
2	Washer (3/8 inch)

Procedure

Install the PTO guard assembly to the top of the gearbox as shown in Figure 15.

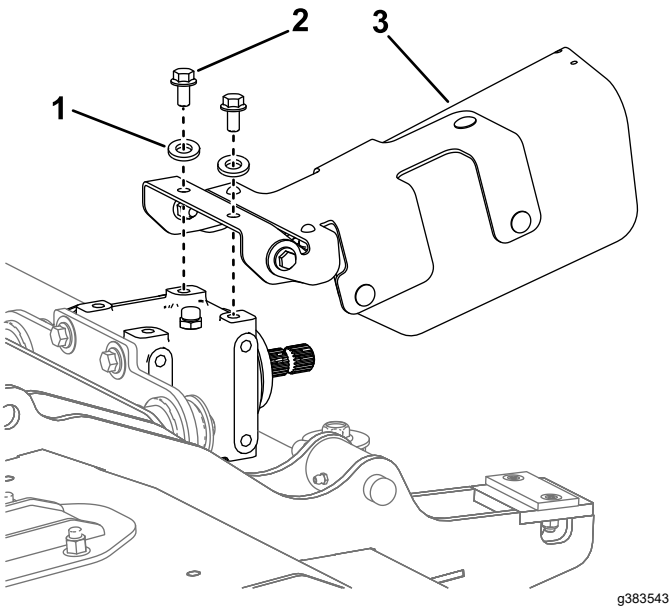

Figure 15

1. Washer (3/8 inch)
2. Screw (3/8 x 3/4 inch)
3. PTO guard assembly

7

Adjusting the Sensor Plate

No Parts Required

Procedure

The sensor and the sensor plate should have a 6 mm (0.24 inch) clearance between them (Figure 16).

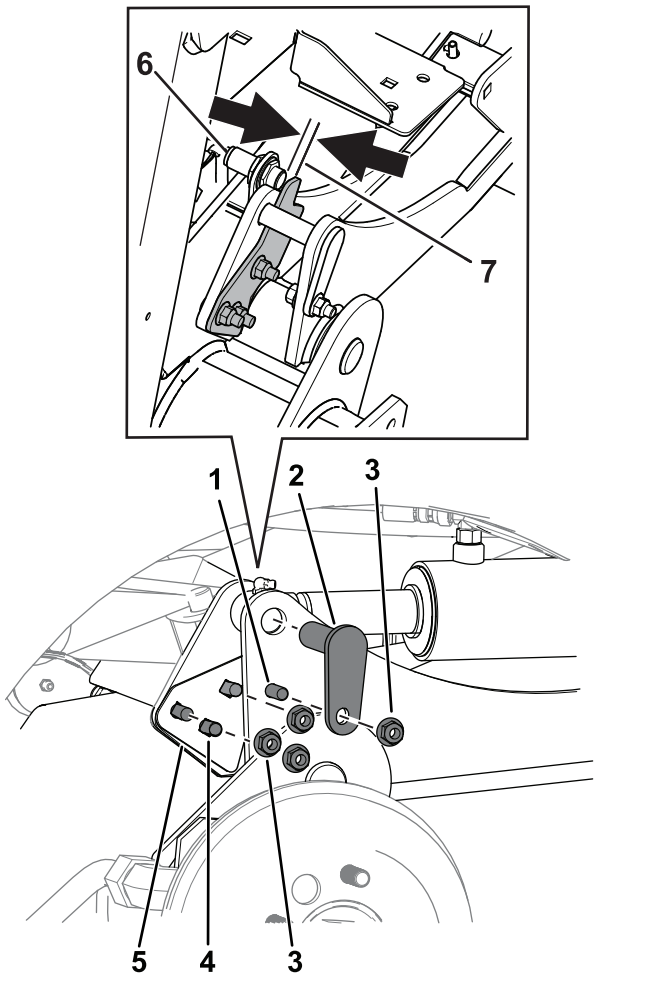

Figure 16

1. Bolt (3/8 x 1-1/4 inches)
2. Small pin
3. Nut (3/8 inch)
4. Carriage bolt
5. Sensor plate
6. Sensor
7. 6 mm (0.24 inch) clearance

If the clearance is incorrect, perform the following steps to adjust the sensor plate:

1. Loosen the locknuts that secure the sensor to the chassis and adjust it so that the correct

clearance exists between the sensor and the sensor plate.

2. Tighten the sensor locknuts from 19 to 21 N·m (14 to 16 ft-lb).

8

Adjusting the Weight Transfer

No Parts Required

Procedure

Adjust the weight transfer of the attachment; refer to the traction unit *Operator's Manual*.

9

Checking the Gearbox Lubricant

No Parts Required

Procedure

Ensure that the gearbox has the correct amount of lubricant; refer to Checking the Lubricant in the Gearbox (page 23).

10

Checking the Caster Tire Pressure

No Parts Required

Procedure

Ensure that the caster tires are filled to 2 to 3.5 bar (30 to 50 psi); refer to Checking the Caster Tire Pressure (page 27).

11

Greasing the Cutting Unit

No Parts Required

Procedure

Grease the cutting unit before the first operation; refer to Lubricating the Cutting Unit (page 22). Failure to properly grease the machine will result in premature failure of critical parts.

12

Engaging the Turnaround Mode

No Parts Required

Procedure

Use the traction-unit display screen to engage Turnaround mode; refer to your traction unit *Operator's Manual*.

Important: **Using Turnaround mode with an equipped flail mower helps prevent premature driveline wear. You must always have Turnaround mode engaged when mowing with the flail.**

Note: Turnaround mode allows you to quickly raise the flail mower above the turf when completing a quick turn at the end of a mowing pass (or while navigating around obstacles) without disengaging the PTO.

13

Reducing the Engine Speed before PTO Engagement

No Parts Required

Reducing the Engine Speed before PTO Engagement

For Traction Unit Models 31900, 31901, 31907, and 31909

Before you engage the PTO with an equipped flail, use the traction-unit throttle control to adjust the engine to a medium speed. Once you engage the PTO, use the throttle control to increase the engine speed to full speed.

Important: **Reducing the engine speed prior to engaging the PTO with the flail helps prevent premature driveline wear.**

Engaging the LOW RPM PTO ENGAGE Mode

For Traction Unit Models 31902 and 31903

Use the traction-unit display screen to engage LOW RPM PTO ENGAGE mode; refer to your traction unit *Operator's Manual*.

Note: LOW RPM PTO ENGAGE mode automatically reduces the engine speed when the PTO is engaged, then automatically raises the engine speed to full speed.

Important: **Using LOW RPM PTO ENGAGE mode with the flail helps prevent premature driveline wear.**

14

Installing Spacers to the Front Frame

For Traction Units with a Cab and Road Light Kit Equipped

Parts needed for this procedure:

2	Spacer
4	Screw (1/4 x 1-1/4 inch)

Procedure

For traction units that have a Cab Kit and a Road Light Kit equipped, the flail mower could contact the road lights. To avoid contact with the road lights, install the spacers to restrict movement of the lift arms.

1. Under the front chassis, remove the existing screws (1/4 inch) and rubber pads from the chassis (Figure 17).

   Discard the screws and retain the pads.

2. Use the new screws (1/4 x 1-1/4 inch) to secure the spacers and rubber pads to the chassis (Figure 17).

   Tighten the screws until the heads are flush with the rubber pads.

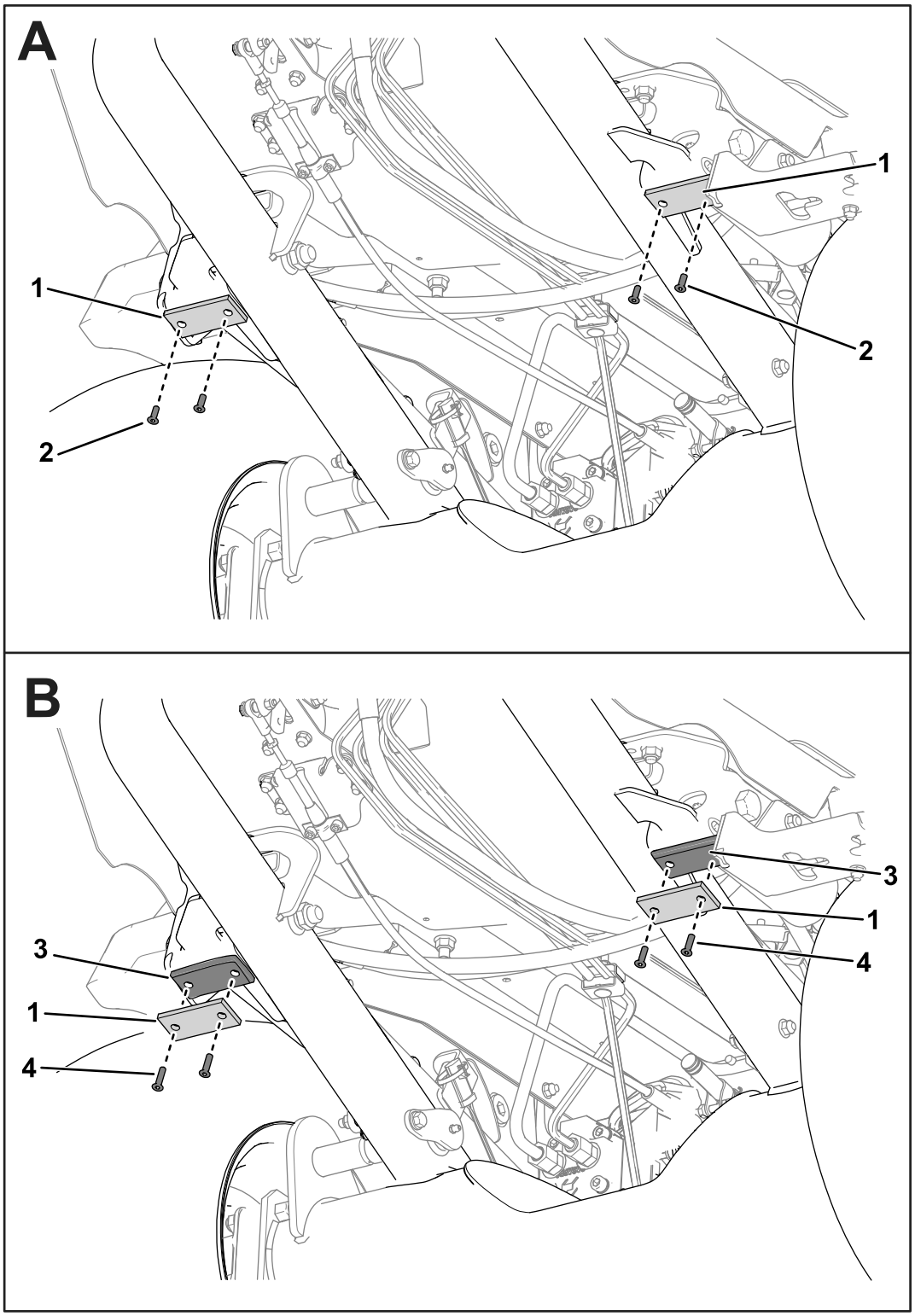

g383974

Figure 17

Several traction-unit parts removed for clarity.

1. Rubber pads
2. Existing screws (1/4 inch)
3. Spacers
4. Screws (1/4 x 1-1/4 inch)

Product Overview

Specifications

Note: Specifications and design are subject to change without notice.

Width of Cut	1.52 m (60 inches)
Height of Cut	Adjustable from 19 to 102 mm (3/4 to 4 inches) in 13 mm (1/2 inch) increments
Net Weight	260 kg (573 lb)

Attachments/Accessories

A selection of the manufacturer approved attachments and accessories is available for use with the machine to enhance and expand its capabilities. Contact your Authorized Service Dealer or authorized the manufacturer distributor or go to www.Toro.com for a list of all approved attachments and accessories.

To ensure optimum performance and continued safety certification of the machine, use only genuine Toro replacement parts and accessories. Replacement parts and accessories made by other manufacturers could be dangerous, and such use could void the product warranty.

Operation

Cutting Unit General Information

- Keep the flail blades sharp and in good condition to ensure good cutting performance, minimum power consumption, and good quality of cut.
- The cutting unit floats to follow ground contours.
- Before engaging the cutting unit, ensure that the engine is set to a reduced speed:
  - Traction unit models 31900, 31901, 31907, and 31909: Refer to Reducing the Engine Speed before PTO Engagement (page 15)
  - Traction unit models 31902 and 31903: Refer to Engaging the LOW RPM PTO ENGAGE Mode (page 15)
- Operate the cutting unit at full engine speed. Adjust the forward speed to suit the grass conditions and to not overload the cutting unit. The lower the forward speed, the better the quality of cut and after-cut appearance.

Adjusting the Height of Cut

Important: **Always ensure that the height of cut is set correctly according to these instructions. Ensure that both the adjuster plate and the caster fork spacers are set according to the table. Failure to do this may cause premature wear in the driveline and excessive vibration.**

Note: The height of cut is determined by the rear roller and the front casters. Blade wear, tire pressure, and bent/damaged caster arms can affect the height-of-cut setting.

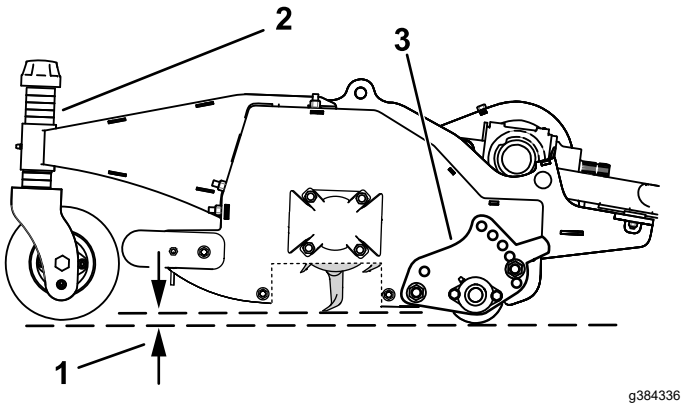

Figure 18

Some parts not shown for clarity.

1. Height of cut
2. Spacer
3. Height-of-cut adjuster plate

1. Position the machine on a level surface, raise the cutting unit and support it with jack stands, shut off the engine, set the parking brake, and remove the key from the ignition switch.
2. Refer to the height-of-cut setting table on the height-of-cut decal (Figure 19) for common height-of-cut settings.

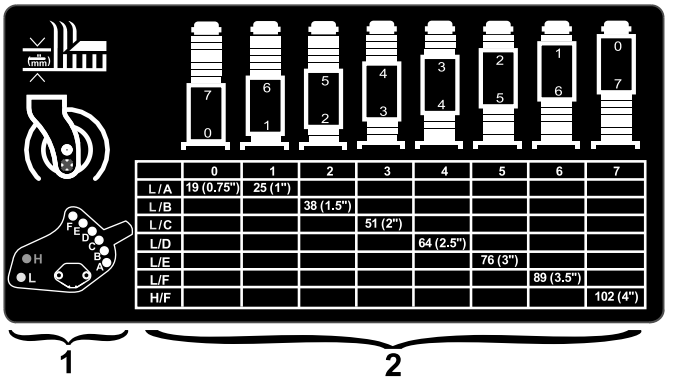

Figure 19

1. Height-of-cut adjuster plate mounting positions
2. Caster fork height-of-cut spacers

3. To adjust the position of the height-of-cut adjuster plate, remove the nuts and bolts securing the plate (Figure 20).
4. Install the bolts in the locations specified in Figure 19 for the desired height of cut; torque the nuts to 60 N·m (44 ft-lb).

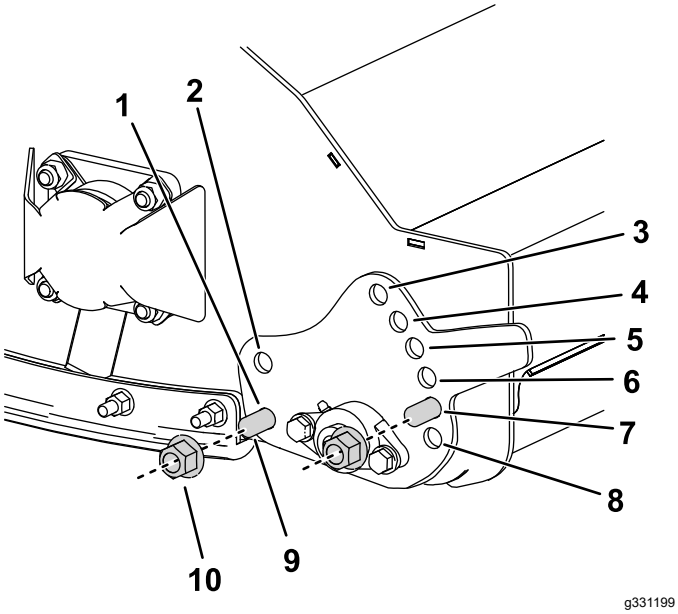

Figure 20

1. Mounting hole “L”
2. Mounting hole "H”
3. Mounting hole “F”
4. Mounting hole “E”
5. Mounting hole “D”
6. Mounting hole “C”
7. Mounting hole “B”
8. Mounting hole “A”
9. Nut
10. Bolt

5. To adjust the position of the caster fork, remove the height-of-cut caps from the front caster shafts and adjust the amount of spacers on either side of the caster shaft hub (Figure 19).

   Note: Spacers placed above the caster shaft hub decrease the height of cut, spacers placed below the hub increase the height of cut.
6. Install the height-of-cut tensioning caps.

Inspecting the Blades

Service Interval: Every 50 hours—Inspect the blades for damage and excessive wear.

Every 50 hours—Ensure that each blade bolt is torqued to 45 N·m (33.2 ft-lb).

Important: **In the event that a single blade is damaged, both that blade and the blade opposite to it should be removed and replaced as a pair to maintain balance.**

1. Park the machine on a level surface, raise the cutting unit, engage the parking brake, shut off the engine, and remove the key from the ignition switch.
2. Support the raised cutting unit using jack stands.
3. Inspect each blade for damage paying particular attention to the fasteners, cutting edge, and installation hole (Figure 21). Replace all damaged blades and fasteners.

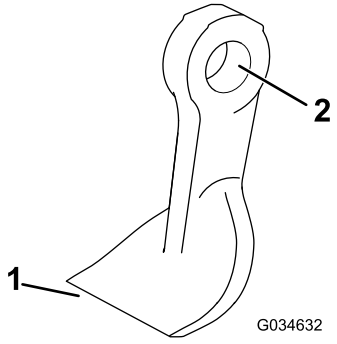

Figure 21

1. Cutting edge
2. Installation hole

4. Inspect each blade for excessive wear using the wear line (Figure 22). When a blade is worn down to the wear line, replace the blade.

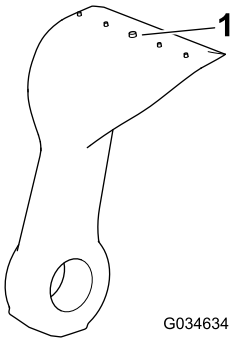

Figure 22

1. Wear line

5. Ensure that each blade bolt is torqued to 45 N·m (33.2 ft-lb).
6. Grip each blade and ensure that there is not more than a total of 3 mm (1/8 inch) of free movement in either direction from the rotor. If there is more than a total of 3 mm (1/8 inch) of free movement, replace the blade.
7. Check each pair of opposite blades for a weight difference between them.

   Note: Each pair of opposite blades should not have a weight difference of more than 10 g (0.4 oz).

⚠ DANGER

A worn or damaged blade can break, and a piece of the blade could be thrown toward you or bystanders, resulting in serious personal injury or death.

- **Inspect the blades periodically for wear or damage.**
- **Replace a worn or damaged blade.**

Operating Tips

Fast Throttle Setting/Ground Speed

To maintain enough power for the machine and the cutting unit while mowing, operate the engine at the fast throttle position and adjust your ground speed for the conditions. Decrease the ground speed as the load on the cutting unit increases. Increase the ground speed as the load on the cutting unit decreases.

Mowing Direction

Alternate mowing direction to avoid making ruts in the turf over time. This also helps disperse clippings which enhances decomposition and fertilization.

Cutting Speed

To improve cut quality, use a slower ground speed.

Avoid Cutting Too Low

If the cutting width of the cutting unit is wider than the mower you previously used, raise the cutting height to ensure that uneven turf is not cut too short.

Select the Proper Height-of-Cut Setting to Suit Conditions

Remove approximately 1 inch (25 mm) or no more than 1/3 of the grass blade when cutting. In exceptionally lush and dense grass, you may have to slow down the forward speed and/or raise the height-of-cut to the next higher setting.

Long Grass

If the grass is ever allowed to grow slightly longer than normal, or if it contains a high degree of moisture, raise the cutting height higher than the usual setting and cut the grass. Then, cut the grass again using the lower, normal setting.

Keep the Cutting Unit Clean

Clean clippings and dirt from the underside of the cutting unit after each use. If grass and dirt build up inside the cutting unit, cutting quality will eventually become unsatisfactory.

To reduce the risk of fire hazard, keep the engine, muffler, battery compartment, parking brake, cutting unit, and fuel storage compartment free of grass, leaves, or excessive grease. Clean up any spilled oil or fuel.

Blade Maintenance

- Maintain sharp blades throughout the cutting season; a sharp blade cuts cleanly without tearing or shredding the grass blades. Tearing and shredding turns grass brown at the edges, which slows growth and increases the chance of disease.
- Check the blades daily for sharpness and for any wear or damage. Sharpen the blades as necessary.
- If a blade is damaged or worn, replace it immediately with a genuine the manufacturer replacement blade. Refer to Replacing the Blades (page 29).

Maintenance

Recommended Maintenance Schedule(s)

Maintenance Service Interval	Maintenance Procedure
After the first 2 hours	• Tighten the caster wheel nuts.
After the first 10 hours	• Tighten the caster wheel nuts.
Before each use or daily	• Check the height-of-cut setting. • Inspect the flail rotors and blades for damage, cracks, and loose fasteners. Replace any damaged or cracked parts. • Grease the cutting unit (grease them immediately after every washing regardless of the interval listed). • Check the front flaps. • Check for any unusual vibration of the rotor. • Check the debris skirt for debris or damage. • Clean the cutting unit.
Every 50 hours	• Inspect the blades for damage and excessive wear. • Ensure that each blade bolt is torqued to 45 N·m (33.2 ft-lb). • Check the gearbox lubricant. • Tighten the caster wheel nuts. • Check the blade bolts. • Ensure that the caster tires are at the correct tire pressure. • Check for excessive play in the rotor bearings.
Every 250 hours	• Check the belt tension. • Ensure that the belt drive and taper-lock bushing set screws are tightened to the correct torque.
Every 400 hours	• Change the gearbox lubricant.
Yearly	• Replace the blades.

⚠ CAUTION

If you leave the key in the ignition switch, someone could accidently start the engine and seriously injure you or other bystanders.

Remove the key from the ignition before you do any maintenance.

Daily Maintenance Checklist

Duplicate this page for routine use.

Maintenance Check Item	For the week of:						
	Mon.	Tues.	Wed.	Thurs.	Fri.	Sat.	Sun.
Check the condition of the blades and rotors.							
Check the height-of-cut setting.							
Check the debris skirt for debris or damage.							
Clean the cutting unit.							
Check the front flaps.							
Lubricate all the grease fittings.[1]							
Touch-up damaged paint.							
1. Immediately after every washing, regardless of the interval listed.							

Notation for Areas of Concern		
Inspection performed by:		
Item	Date	Information

Lubricating the Cutting Unit

Service Interval: Before each use or daily

Grease Type: No. 2 lithium grease

Replace any damaged grease fittings.

Refer to Figure 23 for the location of each pair of grease fittings on the cutting unit.

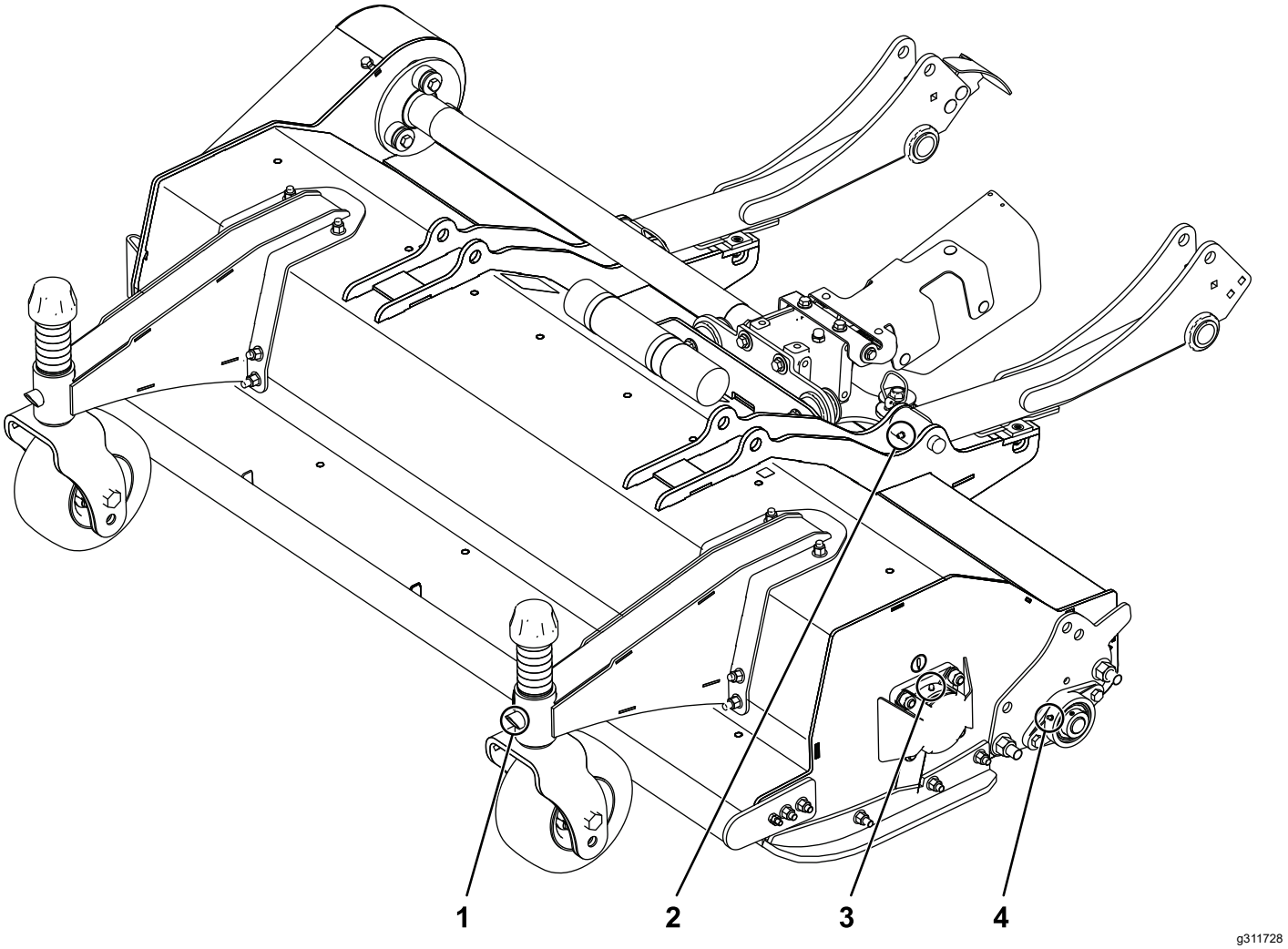

Figure 23
Left side shown

1. Caster arm fitting
2. Lift arm fitting
3. Flange bearing fitting
4. Rear roller fitting

Checking the Lubricant in the Gearbox

Service Interval: Every 50 hours

The gearbox is designed to operate on either petroleum or synthetic SAE 80W–90 gear lube. Although the gearbox is shipped with lubricant from the factory, check the level before operating the cutting unit. The gearbox capacity is 0.33 L (11.15 fl oz).

1. Park the machine on a level surface, lower the cutting unit, engage the parking brake, shut off the engine, and remove the key.
2. Remove the breather plug from the top of the gearbox (Figure 24) and ensure that the lubricant is between the fill marks on the lower part of the breather plug. If the lubricant level is low, add enough lubricant until the level is between the marks.

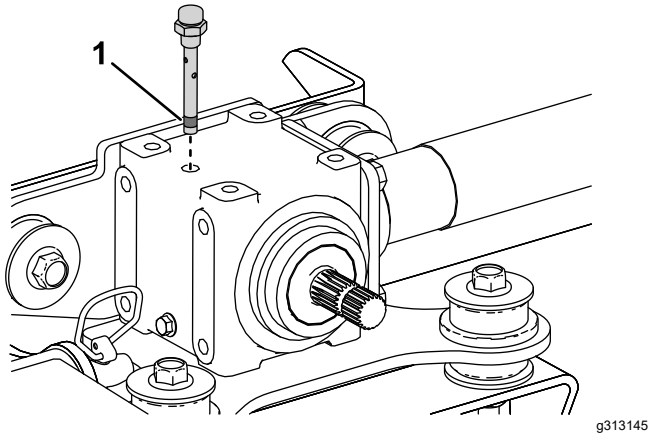

Figure 24

1. Oil level fill marks on breather plug

3. Install the breather plug and torque it to 9 N·m (84 in-lb).

Changing the Lubricant in the Gearbox

Service Interval: Every 400 hours

1. Park the machine on a level surface, lower the cutting unit, engage the parking brake, shut off the engine, and remove the key.
2. Place a pan beneath the drain plug on the gearbox (Figure 25).
3. Remove the drain plug on the lower left side of the gearbox and drain the fluid (Figure 25).

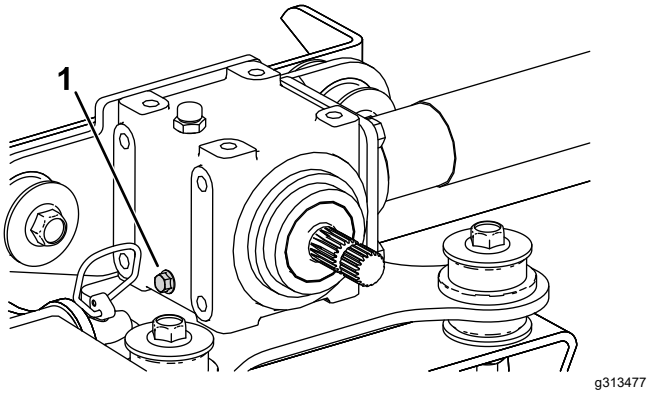

Figure 25

1. Drain plug

4. Install the drain plug and torque to 20 to 27 N·m (15 to 20 ft-lb).
5. Remove the breather plug from the top of the gearbox.
6. Fill the gearbox with the correct gear lube, checking periodically that the lubricant is between the lower fill marks on the breather plug; refer to Checking the Lubricant in the Gearbox (page 23).
7. When the lubricant is between the lower fill marks on the breather plug, install the breather plug and torque it to 9 N·m (84 in-lb).

Checking the Belt Tension

Service Interval: Every 250 hours

1. Park the machine on a level surface, lower the cutting unit, engage the parking brake, shut off the engine, and remove the key.
2. Loosen the 4 captive bolts that secure the top and bottom of the belt cover to the machine (Figure 26).

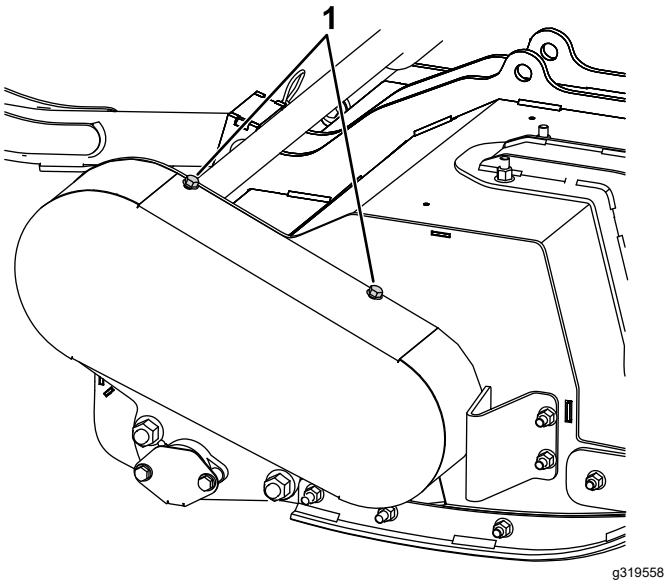

Figure 26

1. Belt cover captive bolts

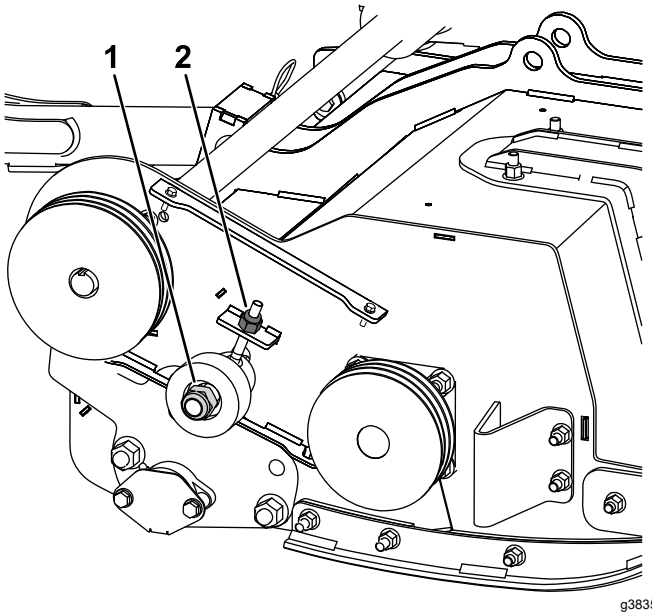

Figure 27

1. Idler pulley nut
2. Idler pulley post nut

3. Loosen, but do not remove, the idler pulley nut (Figure 27).

Note: To loosen the idler pulley nut, you will need to hold the bolt that secures it in place on the inside of the deck.

4. Adjust the nut on the idler pulley post to tension the belt (Figure 27).
5. Using a single-barrel tension meter, push down on the belt to check the tension as follows (Figure 28):
   - For a new belt, you should be able to push the belt down 5 mm (1/5 inch) using 6.0 to 6.4 kg (13.2 to 14.1 lb) of force.
   - For a used belt, you should be able to push the belt down 5 mm (1/5 inch) using 5.1 to 5.6 kg (11.2 to 12.3 lb) of force.

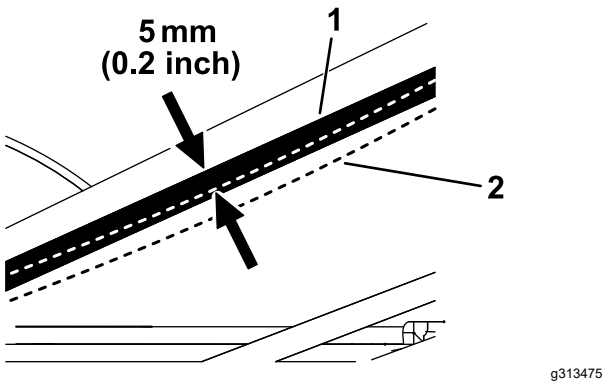

Figure 28

1. Belt without force
2. Belt deflected 5 mm (0.2 inches)

6. Adjust the nut on the idler pulley post as necessary to tighten or loosen the belt.
7. Rotate the rotor manually a couple of turns and check the belt tension again; if the tension is incorrect, check and adjust until it is correct.
8. Tighten the idler pulley nut; torque to 100 N·m (74 ft-lb).
9. Install the belt cover (Figure 26).

Checking the Belt Drive and Taper Lock Hardware

Service Interval: Every 250 hours—Ensure that the belt drive and taper-lock bushing set screws are tightened to the correct torque.

1. Park the machine on a level surface, lower the cutting unit, engage the parking brake, shut off the engine, and remove the key.
2. Remove the belt cover (Figure 26).
3. Tighten the set screws securing the taper-lock bushings to 30 N·m (41 ft-lb).

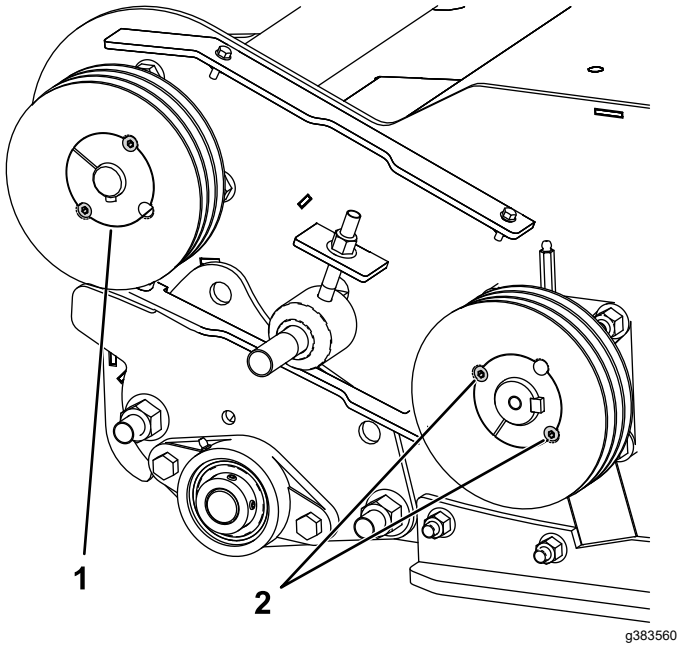

Figure 29

1. Taper-lock bushing
2. Set screws

4. Install the belt cover.

Removing the Cutting Unit from the Machine

1. Park the machine on a level surface, lower the cutting unit, engage the parking brake, shut off the engine, and remove the key.
2. Disconnect the PTO-shaft yoke from the cutting-unit gearbox shaft as shown in Figure 13.

   Important: **Whenever you remove the PTO shaft from the gearbox, use new capscrews and locknuts to secure the shaft to the gearbox.**
3. Remove the fasteners that attach the debris skirt to the front-axle bracket on the traction unit (Figure 14).
4. Remove the lynch pins and pins securing the cutting unit to the lift arms (Figure 30).

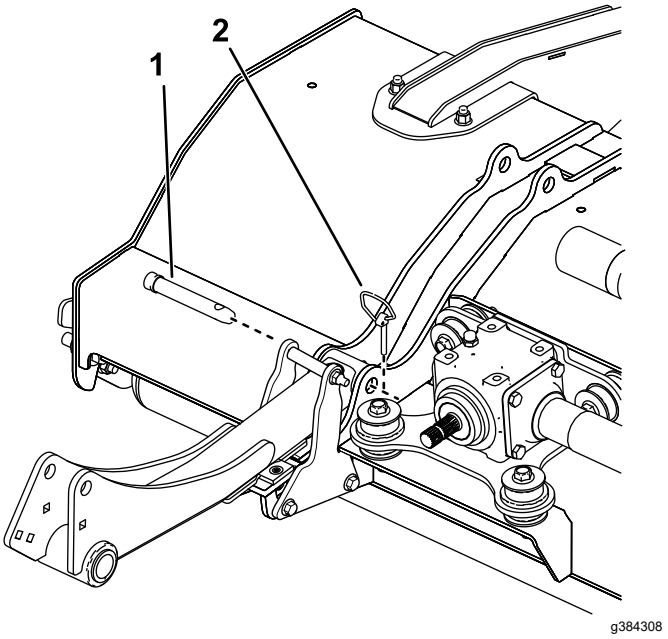

Figure 30

1. Lift arm pin
2. Lynch pin

5. Move the machine away from the cutting unit.

Servicing the Bushings in the Caster Arms

The caster arms have bushings pressed into the top and bottom of the tube, and after many hours of operation, the bushings wear.

To check the bushings, move the caster fork back and forth and from side to side. If the caster spindle is loose inside the bushings, the bushings are worn; replace them.

1. Park the machine on a level surface, raise and support the cutting unit with jack stands, engage the parking brake, shut off the engine, and remove the key.
2. Remove the tensioning cap, spacer(s), and thrust washer from the top of the caster spindle.
3. Pull the caster spindle out of the mounting tube. Allow the thrust washer and spacer(s) to remain on the bottom of the spindle.
4. Insert a pin punch into the top or bottom of the mounting tube and drive the bushing out of the tube (Figure 31). Also, drive the other bushing out of the tube. Clean the inside of the tubes to remove dirt.

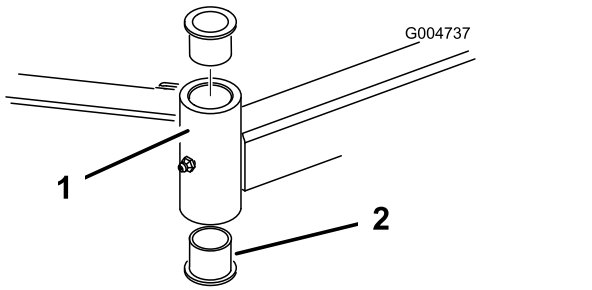

Figure 31

1. Caster arm tube
2. Bushings

5. Apply grease to the inside and outside of the new bushings. Use a hammer and flat plate to drive the bushings into the mounting tube.
6. Inspect the caster spindle for wear and replace it if damaged.
7. Push the caster spindle through the bushings and mounting tube, slide the thrust washer and spacer(s) onto the spindle, and install the tensioning cap on the caster spindle.

Servicing the Caster Wheels and Bearings

1. Park the machine on a level surface, raise and support the cutting unit with jack stands, engage the parking brake, shut off the engine, and remove the key.
2. Remove the locknut from the bolt holding the caster wheel assembly between the caster fork (Figure 32). Grasp the caster wheel and slide the bolt out of the fork or pivot arm.
3. Remove the bearing from the wheel hub and allow the bearing spacer to fall out (Figure 32). Remove the bearing from the opposite side of the wheel hub.
4. Check the bearings, spacer, and inside of the wheel hub for wear. Replace any damaged parts.
5. To assemble the caster wheel, push the bearing into the wheel hub. When installing the bearings, press on the outer race of the bearing.

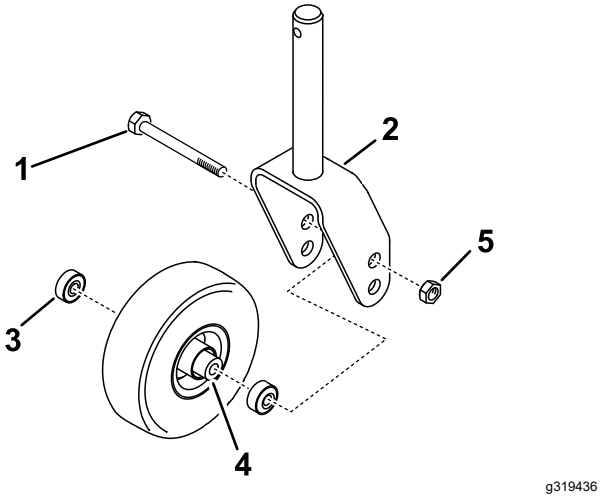

Figure 32

1. Caster bolt
2. Caster fork
3. Bearings
4. Bearing spacer
5. Large locknut

6. Slide the bearing spacer into the wheel hub. Push the other bearing into the open end of the wheel hub to captivate the bearing spacer inside the wheel hub.
7. Install the caster wheel assembly between the caster fork and secure it in place with the bolt and locknut.

Checking the Blade Bolts

Service Interval: Every 50 hours

Ensure that all blade bolts are torqued to 45 N·m (33 ft-lb).

Checking the Front Flaps

Service Interval: Before each use or daily

Ensure that all flaps are undamaged and free to rotate; replace any and all damaged flaps.

Clearing a Blocked Rotor

⚠ WARNING

Residual power in the flail rotor system could cause injury through sudden movement of the flail rotor(s) when the blockage is released.

- **Never attempt to rotate or clear blockage from the flail rotors by hand.**
- **Always wear protective gloves and use a wooden pole.**
- **Ensure that the wooden pole fits in the flail rotor and is long enough to provide sufficient leverage to release the blockage.**

1. Set the PTO switch to the OFF position.
2. Park the machine on level ground, set the throttle control to the slow engine-speed position, and engage the parking brake.
3. Raise the cutting unit as necessary to access the blockage.
4. Shut off the engine, remove the ignition key, and wait for all moving parts to stop.
5. Support the raised cutting unit with jack stands.
6. Use a wooden pole to carefully remove the blockage.

   Important: **The flail rotor may rotate when you release the blockage.**

   Important: **Avoid using excessive force when you remove the blockage.**
7. Remove the wooden pole from the cutting unit before you start the engine.
8. Repair or adjust the cutting unit if necessary.

Checking the Caster Tire Pressure

Service Interval: Every 50 hours

Ensure that the caster tires are filled to 2 to 3.5 bar (30 to 50 psi).

Checking for Rotor Vibration

Service Interval: Before each use or daily—Check for any unusual vibration of the rotor.

To check for any unusual vibration of the rotor, run the cutting unit at full-engine speed.

1. Start the engine and move the machine to a level, open area away from bystanders.
2. Lower the cutting unit and engage the parking brake.
3. Engage the PTO and run the engine at full throttle while watching for any unusual rotor vibration.
4. If the rotor vibration is unusual, perform the following:

   A. Set the throttle to idle, shut off the PTO, and raise the cutting unit.

   B. Shut off the engine, remove the key, and wait for all moving parts to stop.

   C. Check the cutting unit for the following:

   - Debris preventing the rotor or blades operating correctly and remove any blockages; refer to Clearing a Blocked Rotor (page 27).
   - A damaged rotor or worn rotor bearings; refer to Checking the Rotor Bearings (page 28).
   - Missing, damaged, unbalanced, or excessively worn blades; refer to Sharpening the Blades (page 28) and Replacing the Blades (page 29).

     Important: **All opposing blade pairs must have a similar amount of wear; unbalanced blades may affect the balance of the rotor.**

Important: **If you cannot correct the cause of unusual rotor vibration, contact your authorized Toro distributor.**

Checking the Rotor Bearings

Service Interval: Every 50 hours—Check for excessive play in the rotor bearings.

Important: **Wear gloves when checking the rotor bearings.**

1. Move the machine onto a level surface and engage the parking brake.
2. Raise cutting unit, shut off the engine, remove the key, and wait for all moving parts to stop.
3. Support the cutting unit with jack stands.
4. Grip the rotor at each end and check for excessive end play; if the rotor has excess end play, it may need to be replaced; contact your authorized Toro distributor.

Checking the Debris Skirt

Service Interval: Before each use or daily—Check the debris skirt for debris or damage.

Visually inspect the debris skirt for any damage and remove any debris that has collected on the debris skirt.

Sharpening the Blades

⚠ WARNING

Using a grinder in an unsafe manner could cause serious personal injury or property damage.

Ensure that the person sharpening the blades has been adequately trained in how to safely use a hand-held grinder.

Use an angle grinder to sharpen the angled grinding surface on the back of the flail blade (Figure 33).

Important: **Do not grind the front face of the flail blade.**

While grinding the blade, keep the cutting edge perfectly horizontal and the angled surface flat to the ground (Figure 33).

Use the grinder gently and ensure that the flail does not get hot; otherwise, the steel will lose its hardness.

Do not sharpen the blades past the wear line that is indicated by the 5 dots (Figure 33). Ensure that all the flail blades are sharpened equally to maintain the balance of each rotor.

Keep a new blade as a reference and refer to it when grinding.

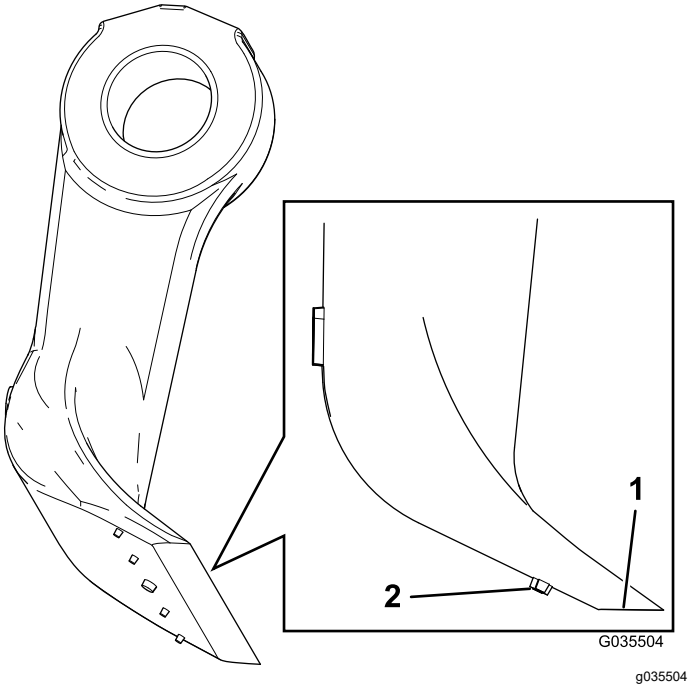

Figure 33

1. Surface to grind
2. Wear indicators

Replacing the Blades

Service Interval: Yearly—Replace the blades.

To maintain balance, replace blades only as an opposed pair or a whole rotor at a time. Also replace the bushing, the bolt, and the locknut when you replace a blade. There are 2 service kits available for blade replacement; refer to the *Parts Catalog*.

1. Raise the cutting unit and secure it with jack stands.
2. Engage the parking brake, shut off the engine, and remove the key.
3. Turn the rotor slowly by hand so that each row of flails are in the desired position and you can easily access them.
4. Remove any debris from the bolt head and the nut and clean the protruding threads with a wire brush.
5. Mark the position of the bolt head so that you can replace the bolts from the same side.
6. Holding the blade in a rag or padded glove, remove the nut, bolt, bushing, and blade (Figure 34).

   Note: If needed, apply penetrating oil to the threads to make the nut easier to remove.

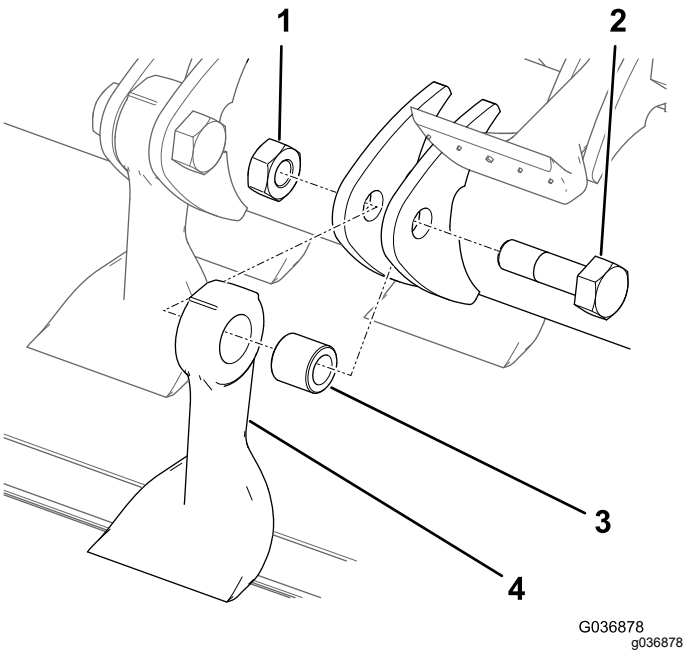

Figure 34

1. Nut
2. Bolt
3. Bushing
4. Blade

7. Discard the blade, bushing, nut, and bolt.
8. Install a new blade and bushing with a new nut and blade bolt (Figure 34).

   Note: Pay attention to the bolt-head-position markings so that you replace the bolt in the same direction.
9. Torque the fasteners to 45 N·m (33 ft-lb).

Cleaning Under the Cutting Unit

Service Interval: Before each use or daily

Remove the grass buildup under the cutting unit daily.

1. Park the machine on a level surface, raise the cutting unit to the TRANSPORT position, engage the parking brake, shut off the engine, and remove the key.
2. Thoroughly clean the underside of the cutting unit with water.

Storage

1. Park the machine on a level surface, raise the cutting unit to the TRANSPORT position, engage the parking brake, shut off the engine, and remove the key.
2. Thoroughly clean the cutting unit, paying special attention to these areas:
   - Underneath the cutting unit
   - Under the cutting unit belt cover
   - PTO shaft assembly
   - All grease fittings and pivot points
3. Check and adjust the traction-unit front and rear tire pressure; refer to the traction-unit *Operator's Manual*.
4. Sharpen all blades and replace any damaged blades as necessary; refer to Sharpening the Blades (page 28) and Replacing the Blades (page 29).
5. Check all fasteners for looseness and tighten them as necessary.
6. Grease or oil all grease fittings and pivot points and wipe off any excess lubricant; refer to Lubricating the Cutting Unit (page 22).
7. Lightly sand and use touch up paint on painted areas that are scratched, chipped, or rusted. Repair any dents.

Declaration of Incorporation

Model No.	Serial No.	Product Description	Invoice Description	General Description	Directive
02835	400000000 and Up	F60 Flail Mower	FCF-60 155CM FLAIL - ATTACHMENT	Flail Mower	* See below

*Directive 2006/42/EC (effective until 20 January 2027), replaced by Regulation (EU) 2023/1230 (applicable from 20 January 2027)

Relevant technical documentation has been compiled as required per Directive 2006/42/EC (effective until 20 January 2027), replaced by Regulation (EU) 2023/1230 (applicable from 20 January 2027).

We will undertake to transmit, in response to requests by national authorities, relevant information on this partly completed machinery. The method of transmission shall be electronic transmittal.

This machinery shall not be put into service until incorporated into approved Toro models as indicated on the associated Declaration of Conformity and in accordance with all instructions, whereby it can be declared in conformity with all relevant Directives.

Certified:



Michael Benedict
Engineering Director
8111 Lyndale Ave. South
Bloomington, MN 55420, USA
November 18, 2026

Authorized Representative:

Marcel Dutrieux
Manager European Product Integrity
Toro Europe NV
Nijverheidsstraat 5
2260 Oevel
Belgium

California Proposition 65 Warning Information

What is this warning?

You may see a product for sale that has a warning label like the following:



WARNING: Cancer and Reproductive Harm—www.p65Warnings.ca.gov.

What is Prop 65?

Prop 65 applies to any company operating in California, selling products in California, or manufacturing products that may be sold in or brought into California. It mandates that the Governor of California maintain and publish a list of chemicals known to cause cancer, birth defects, and/or other reproductive harm. The list, which is updated annually, includes hundreds of chemicals found in many everyday items. The purpose of Prop 65 is to inform the public about exposure to these chemicals.

Prop 65 does not ban the sale of products containing these chemicals but instead requires warnings on any product, product packaging, or literature with the product. Moreover, a Prop 65 warning does not mean that a product is in violation of any product safety standards or requirements. In fact, the California government has clarified that a Prop 65 warning "is not the same as a regulatory decision that a product is 'safe' or 'unsafe.'" Many of these chemicals have been used in everyday products for years without documented harm. For more information, go to https://oag.ca.gov/prop65/faqs-view-all.

A Prop 65 warning means that a company has either (1) evaluated the exposure and has concluded that it exceeds the "no significant risk level"; or (2) has chosen to provide a warning based on its understanding about the presence of a listed chemical without attempting to evaluate the exposure.

Does this law apply everywhere?

Prop 65 warnings are required under California law only. These warnings are seen throughout California in a wide range of settings, including but not limited to restaurants, grocery stores, hotels, schools, and hospitals, and on a wide variety of products. Additionally, some online and mail order retailers provide Prop 65 warnings on their websites or in catalogs.

How do the California warnings compare to federal limits?

Prop 65 standards are often more stringent than federal and international standards. There are various substances that require a Prop 65 warning at levels that are far lower than federal action limits. For example, the Prop 65 standard for warnings for lead is 0.5 µg/day, which is well below the federal and international standards.

Why don't all similar products carry the warning?

- Products sold in California require Prop 65 labelling while similar products sold elsewhere do not.
- A company involved in a Prop 65 lawsuit reaching a settlement may be required to use Prop 65 warnings for its products, but other companies making similar products may have no such requirement.
- The enforcement of Prop 65 is inconsistent.
- Companies may elect not to provide warnings because they conclude that they are not required to do so under Prop 65; a lack of warnings for a product does not mean that the product is free of listed chemicals at similar levels.

Why does Toro include this warning?

Toro has chosen to provide consumers with as much information as possible so that they can make informed decisions about the products they buy and use. Toro provides warnings in certain cases based on its knowledge of the presence of one or more listed chemicals without evaluating the level of exposure, as not all the listed chemicals provide exposure limit requirements. While the exposure from Toro products may be negligible or well within the "no significant risk" range, out of an abundance of caution, Toro has elected to provide the Prop 65 warnings. Moreover, if Toro does not provide these warnings, it could be sued by the State of California or by private parties seeking to enforce Prop 65 and subject to substantial penalties.