Seat Belt Alarm Kit

Groundsmaster® 4300 or Reelmaster® 5000 Series Traction Unit with ROPS

Model No. 50261

Installation Instructions

Note: This kit is compatible with traction unit models 30879, 03950, 03952, 03954, 03964, 03956, and 03966.

Safety

Safety and Instructional Decals

Safety decals and instructions are easily visible to the operator and are located near any area of potential danger. Replace any decal that is damaged or missing.

Decal Part: 164-7051



s_decal164-7051

1 Alarm

Installation

Preparing the Machine

⚠ CAUTION ⚠

If you leave the key in the ignition switch, someone could accidently start the engine and seriously injure you or bystanders.

Remove the key from the ignition switch before you do any maintenance.

1. Park the machine on a level surface, disengage the PTO, lower the cutting units, and engage the parking brake.
2. Shut off the engine, remove the key, wait for all moving parts to stop, and allow the engine to cool.

© 2026—The Toro® Company
8111 Lyndale Ave So
Bloomington, MN 55044

Register at
www.Toro.com

Original Instructions (EN)
Printed in the USA
All rights reserved

3483-308

Disconnecting the Battery

⚠ DANGER ⚠

Battery electrolyte contains sulfuric acid, which is fatal if consumed and causes severe burns.

- ***Do not drink electrolyte and avoid contact with skin, eyes, or clothing.***
- ***Wear safety glasses and rubber gloves.***
- ***Fill the battery where clean water is always available for flushing the skin.***

---

1. Depending on the machine model, open either the screen or the hood to access the battery.
2. Remove the cover (1) from the battery tray (4) by pressing the sides of the battery cover.
3. Disconnect the negative battery cable (2).
4. Slide the insulator cover (3) off the positive battery-cable clamp, and disconnect the positive battery cable.
5. Close and latch the screen/hood.

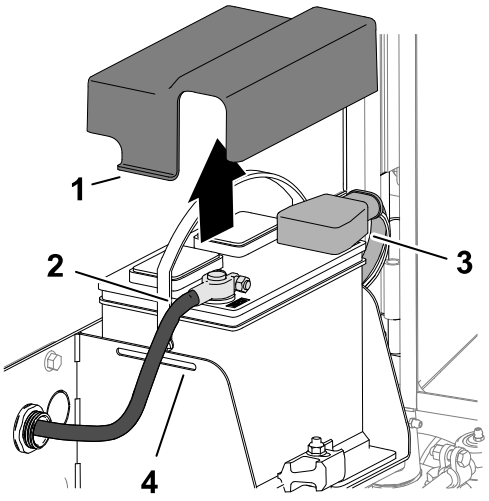

G416225

Tilting the Seat

1. Unlatch the seat base (A).
2. Tilt the seat and base open (B).
3. Support it with the prop rods (C).

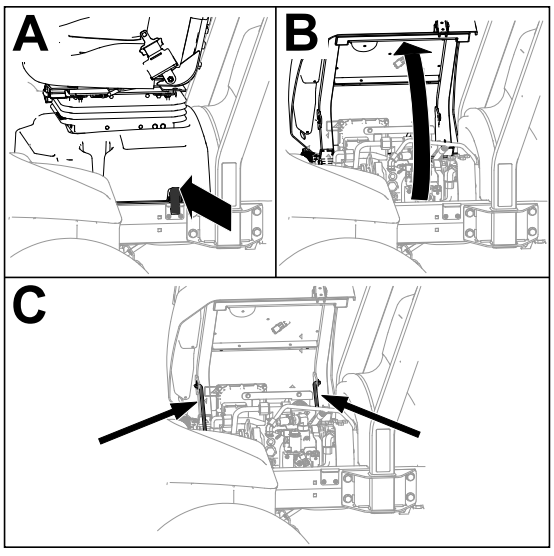

G443836

Installing the Inertial Measurement Unit (IMU)

Parts Required

1	IMU
2	Bolt (1/4 x 1-1/4 inches)
2	Washer
2	Nut

1. Remove the 4 flange-head screws that secure the floor plate to the frame rails, and remove the floor plate.

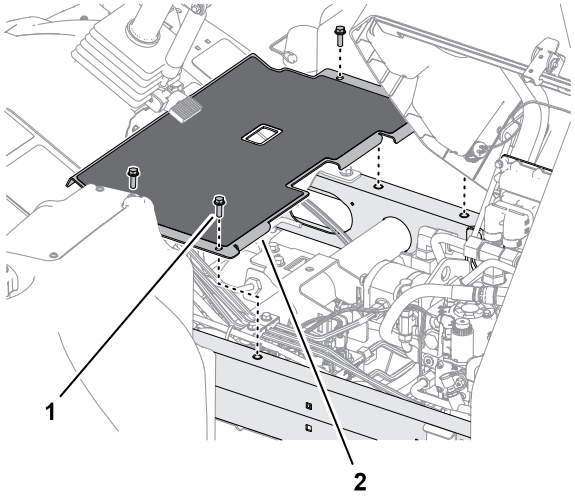

G556581

(1) Flange-head screw

(2) Floor plate

2. Install the IMU onto the bottom of the floor plate as shown.

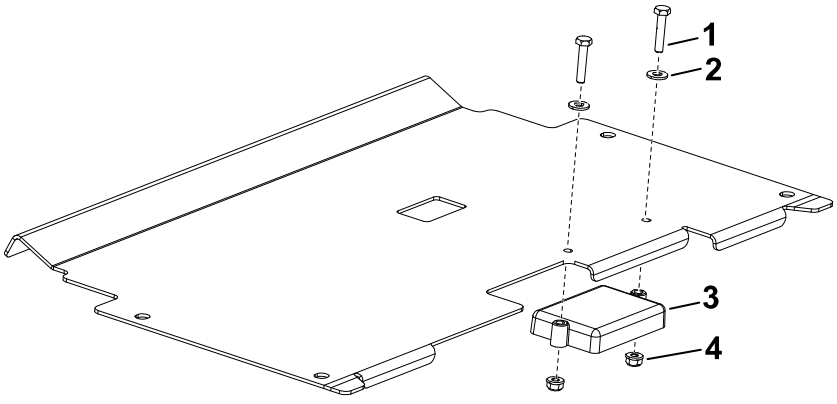

G606735

(1) Bolt (1/4 x 1-1/4 inches)

(2) Washer

(3) IMU

(4) Nut

3. Install the floor plate on the machine using the corresponding hardware.

Replacing the Seat Belt Buckle

Parts Required

1	Seat belt buckle

1. Remove the existing seat belt buckle from the seat base by removing the bolt.
2. Install the new seat belt buckle using the previously removed bolt.
3. Torque the bolt to **55 N·m (41 ft-lb).**

Installing the Alarm

Parts Required

1	Alarm
1	R-clamp
1	U-nut
1	Bolt (3/10 x 3/4 inch)
1	Alarm decal

1. Remove the access panel from the control arm.
2. Install the alarm decal on the top of the alarm in the orientation shown.

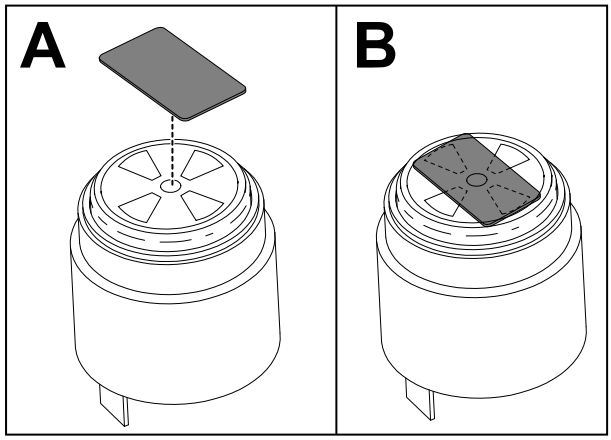

G607151

3. Secure the alarm to the machine using the R-clamp, U-nut, and bolt (5/16 x 3/4 inch).

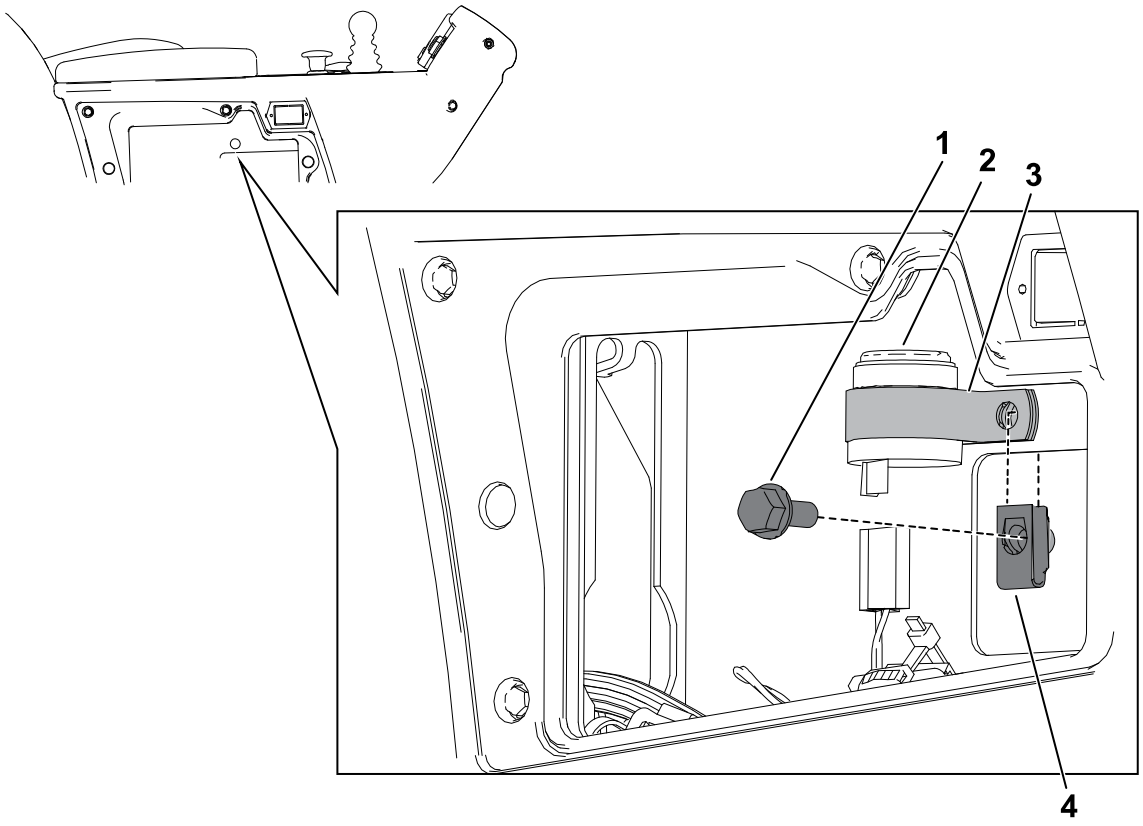

G606934

1. Bolt (5/16 x 3/4 inch)
2. Alarm
3. R-clamp
4. U-nut

Routing the Wire Harness

Parts Required

1	Wire harness
6	Cable tie

1. Connect the 12-pin connector on the kit wire harness to the IMU.
2. Route the wire harness along the main wire harness under the seat as shown.
3. Install the 6-pin connector on the kit harness into the expansion port on the main wire harness.
4. Secure the kit wire harness to the machine wire harness using cable ties and 1 push-in cable tie mount.

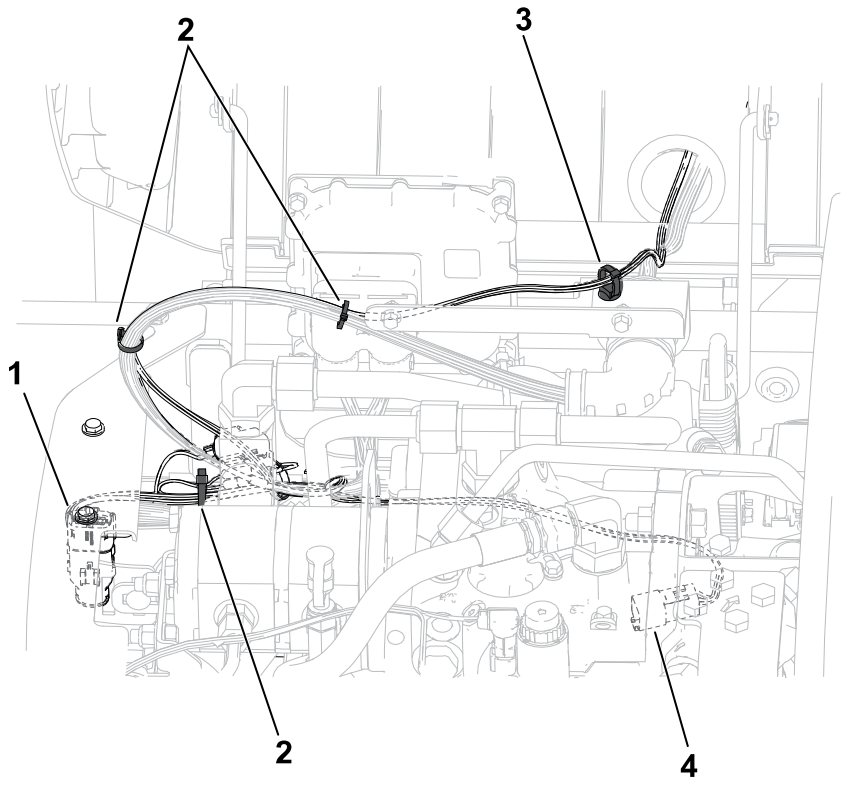

G606983

(1) 12-pin connector on kit wire harness; plug into the IMU

(2) Cable ties

(3) Push-in cable tie mount

(4) 6-pin connector on kit wire harness; plug into expansion port on main wire harness

5. Close and latch the seat base.

6. On the outside of the seat, route the remaining portion of the harness along the main wire harness as shown.
7. Plug the seat belt connector into the seat belt buckle. Plug the alarm connector into the alarm.

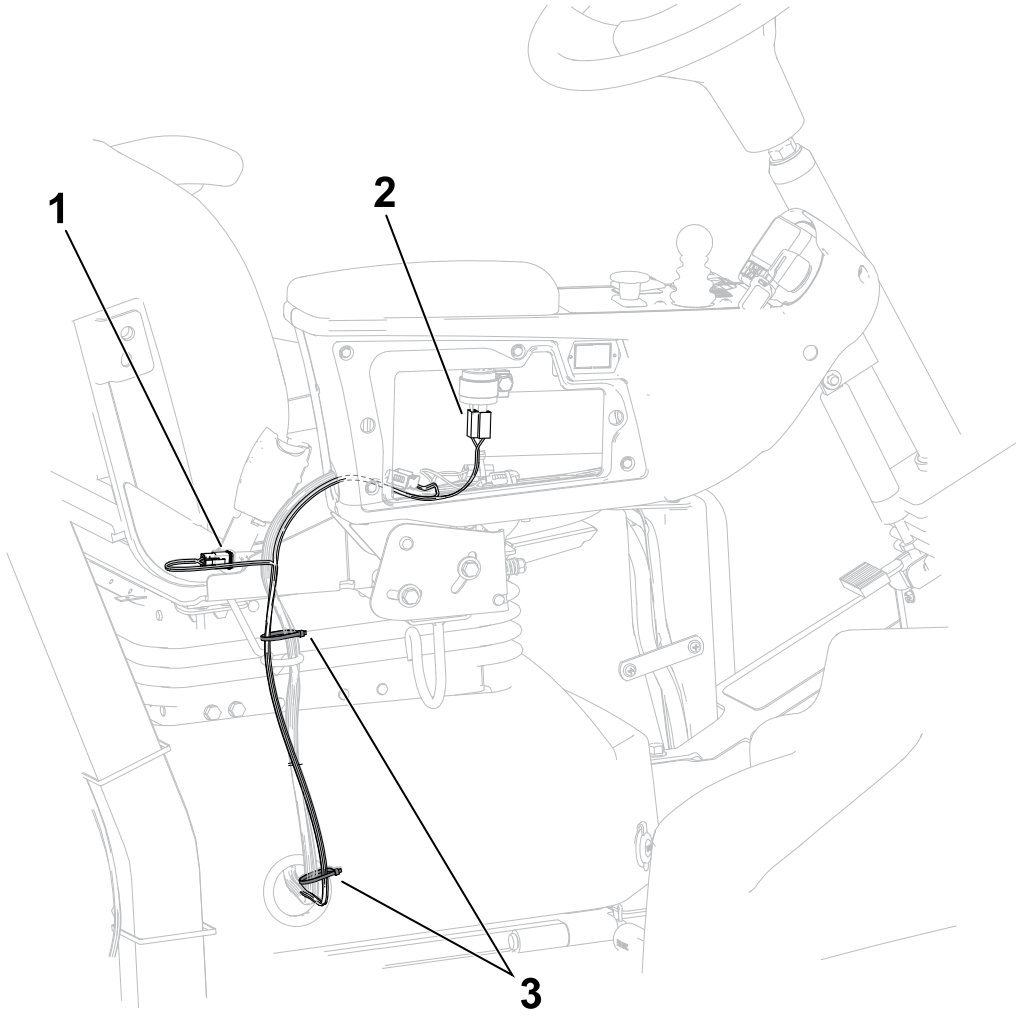

G606984

(1) Seat belt connector
(2) Alarm connector
(3) Cable ties

8. Secure the kit wire harness to the machine wire harness using cable ties.

Connecting the Battery

1. Install the positive battery cable (red) [3] to the positive (+) battery post.
2. Install the negative battery cable (black) [2] to the negative (-) battery post.
3. Apply a coat of Grafo 112X (skin-over) grease, Toro Part No. 505-47 to the battery posts and battery-cable clamps.
4. Slide the rubber boot over the positive battery-cable clamp.
5. Assemble the cover over the battery, inserting the tabs [1] of the cover into the slots [4] in the battery tray.
6. Close and latch the screen/hood.

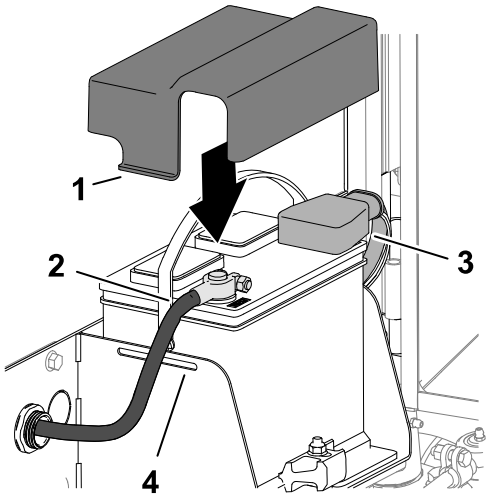

G416226

Calibrating the Kit

1. Move the machine to level ground and ensure that the vehicle is not moved during calibration.
2. Locate the calibration jumper on the alarm harness located near the IMU.
3. Remove the calibration jumper from the 2 bullet terminals and connect the 2 terminals together.

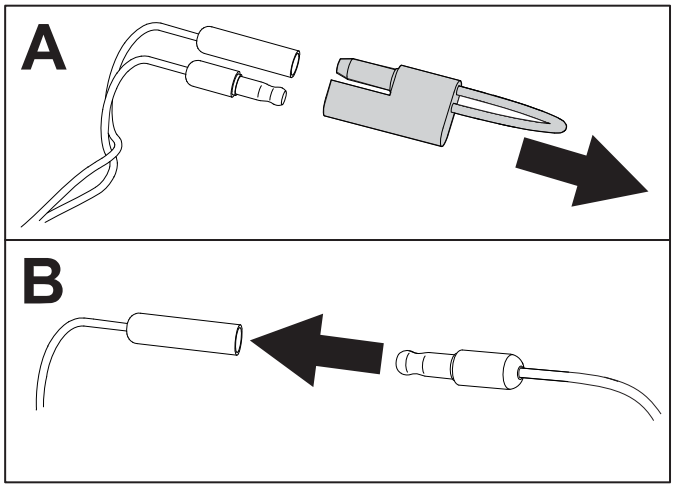

G610386

4. Turn on the machine and allow at least 30 seconds for automatic calibration. Once complete, the InfoCenter will display a calibration confirmation.

   Note: Ensure that the vehicle is not moved during calibration.
5. Turn off the machine, disconnect the terminals, and install the calibration jumper onto the 2 bullet terminals.

Testing the Alarm Function

1. Unlatch the seat belt.
2. Briefly drive the machine in an open area.
3. Verify that the audible alarm is active.
4. Verify that the visual alarm icon  appears on the InfoCenter.

Notes:

Notes:


TORO®