Form No. 3445-132 Rev D

TORO®

Count on it.

Parts Catalog

TimeCutter® ZS 4200S

Riding Mower

Model No. 74685—Serial No. 409290000 and Up

Register at www.Toro.com.
Original Instructions (EN)

CE

3445-132 D

Ordering Replacement Parts

To order replacement parts, please supply the part number, the quantity, and the description of each part desired.

Understanding Reference Numbers

Each identified part in an illustration has a reference number. The reference number for a part also appears in the parts list, along with other information about the part.

This catalog uses two special reference number formats, one to indicate parts in a service assembly and another to indicate the quantity of a given part in an illustration.

Service Assembly Reference Numbers

Parts in service assemblies have reference numbers in the form a:b. The a represents the reference number of the entire service assembly and the b represents a sequential number unique to each part within the service assembly.

For example, a wheel assembly might be identified by reference number 6, the tire by 6:1, the valve by 6:2, and the wheel by 6:3. When you order the assembly identified by reference number 6, you receive all parts identified by reference numbers 6:1,6:2, and 6:3. However, you may also order any part individually. Reference numbers of this type appear in illustration and in parts lists.

Reference Numbers Indicating Quantity

In an illustration, if a reference number indicates more than one part, the reference number has the form nX y. The n represents the quantity of the part, the X is the multiplication symbol, and the y represents the reference number.

For example, in an illustration, the reference number 2X 37 means that two of the parts identified by reference number 37 are indicated.

Contents

Frame Assembly 4
Deck Lift Assembly 6
Caster, Wheel and Tire Assembly 8
Traction Drive Assembly 10
LH Hydro Transmission Assembly No. 139-7450 12
RH Hydro Transmission Assembly No. 139-7451 14
Brake Assembly 16
Rear Tire Assembly 18
Seat Pan Assembly 20
Seat Assembly No. 147-5157 22
Motion Control Assembly 24
Engine and Muffler Assembly 26
Fuel System Assembly 28
Air Intake and Filtration Assembly 30
Ignition and Electrical Assembly 32
Crankcase Assembly 34
Governor Control Assembly 36
Piston and Cylinder Head Assembly 38
Blower Housing Assembly 40
Gasket and Seal Kit 42
Body Styling and Fuel Pod Assembly 44
Electrical Assembly 46
42 Inch Deck and Decal Assembly 48
42 Inch Mulch Plug Assembly No. 137-5034 50
Decal Assembly 52
Clutch Assembly 54
Attachments and Accessories 56

© 2026—The Toro® Company
8111 Lyndale Avenue South
Bloomington, MN 55420

Contact us at www.Toro.com.
Printed in the USA.
All Rights Reserved

Frame Assembly

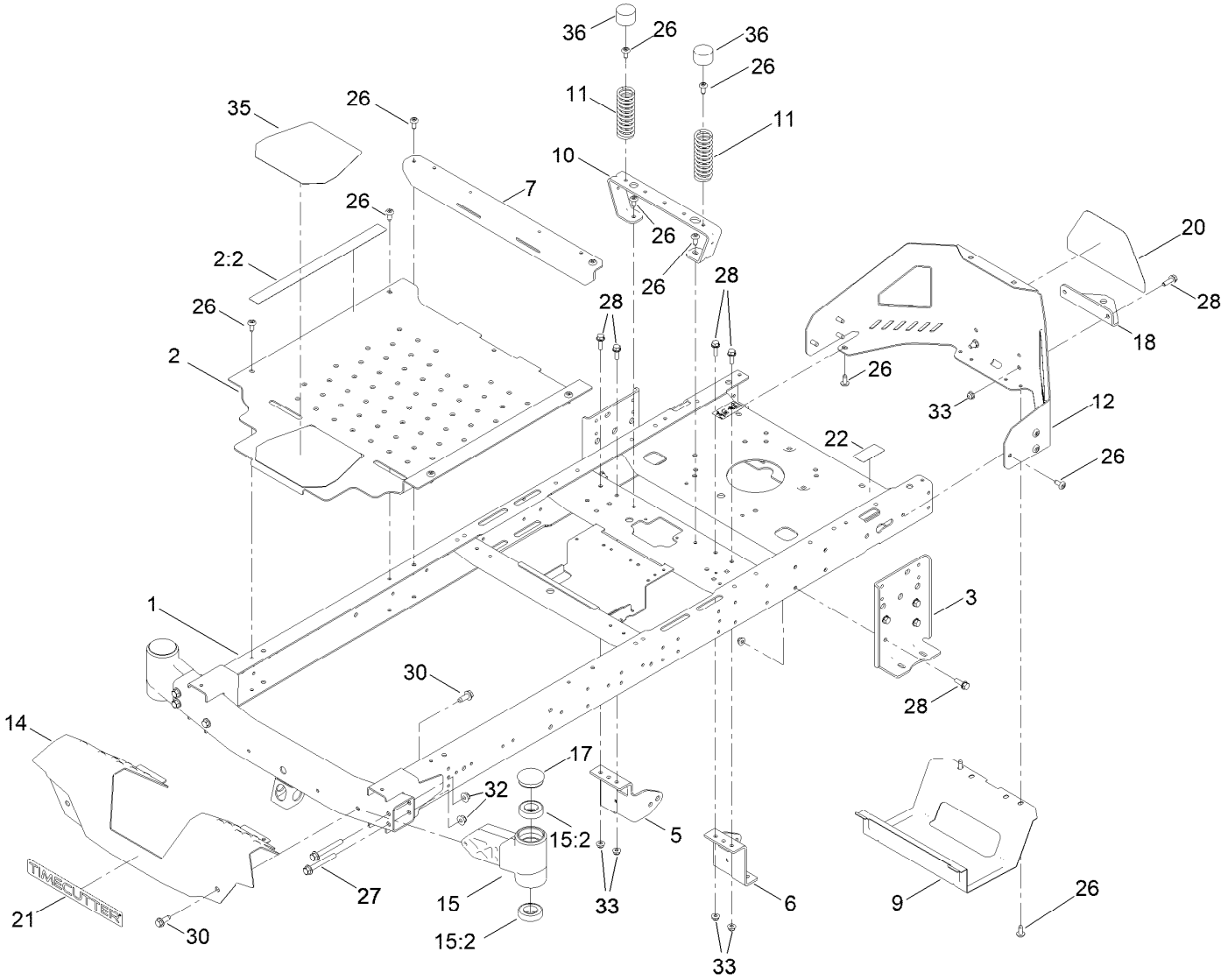

Frame Assembly (continued)

Ref.	Part Number	Qty.	Description
1	137-9820-01	1	Frame Assembly
2	140-5045	1	Pan-Floor ASM
2:2	144-5288	1	Decal-Warning
3	138-7520-01	2	Plate-Mount, Hydro
5	137-7020-01	1	Mount-Hydro, Front (Right)
6	139-3211-01	1	Mount-Hydro, Front (Left)
7	138-9791-01	1	Brace-Cross
9	138-0867-03	1	Guard-Muffler
10	138-6036-03	1	Support-Seat
11	138-2548	2	Spring-Compression
12	138-9820-03	1	Guard-Engine
14	138-9827-01	1	Footrest
15	140-2098	2	Axle Stub ASM
15:2	109-3678	2	Bearing-Ball

Ref.	Part Number	Qty.	Description
17	138-7200	2	Cap-Grease
18	117-1232-03	1	Bracket-Hitch
20	139-5890	1	Decal-Timecutter
21	139-2387	1	Decal-Timecutter
22	121-2989	2	Decal-Bypass
26	138-9753	20	Screw
27	139-2429	4	Screw-HHF
28	139-2596	14	Screw-HHF
30	139-2428	4	Screw-HWH
32	139-2430	4	Nut-HF, NI
33	119-4041	14	Nut-HF
35	139-3220	1	Tread-Step
36	701178	2	Cap-Protector

Deck Lift Assembly

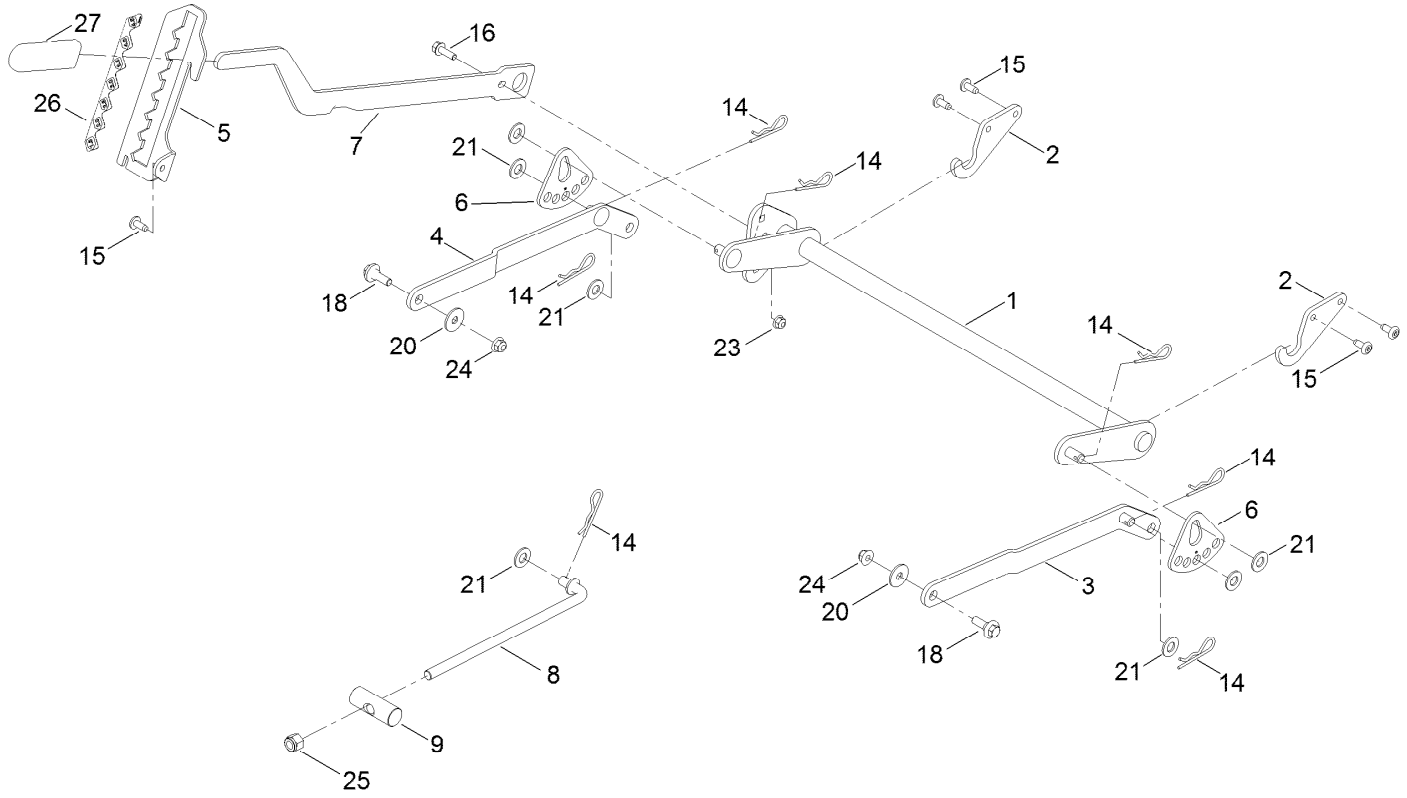

Deck Lift Assembly (continued)

Ref.	Part Number	Qty.	Description
1	137-7093-03	1	Deck Lift ASM
2	138-6021	2	Bracket-Pivot, Decklift
3	137-9844	1	LH Arm ASM
4	137-9846	1	RH Arm ASM
5	139-2350-01	1	Bracket-HOC
6	138-2564	2	Plate-Adjustment, HOC
7	137-7087-03	1	Lever-Lift
8	138-6050	1	Rod-Mount, Deck
9	119-8810	1	Pin-Pivot
14	139-2562	7	Pin-Hair

Ref.	Part Number	Qty.	Description
15	138-9753	5	Screw
16	139-2596	1	Screw-HHF
18	137-9847	2	Screw-Shoulder
20	140-5063	2	Washer-Hardened, Cz
21	139-2611	7	Washer-Flat
23	119-4041	1	Nut-HF
24	119-4042	2	Nut-HF, NI
25	139-1725	1	Nut-Hex
26	140-2748	1	Decal-HOC
27	1-633268	1	Grip-Lever

Caster, Wheel and Tire Assembly

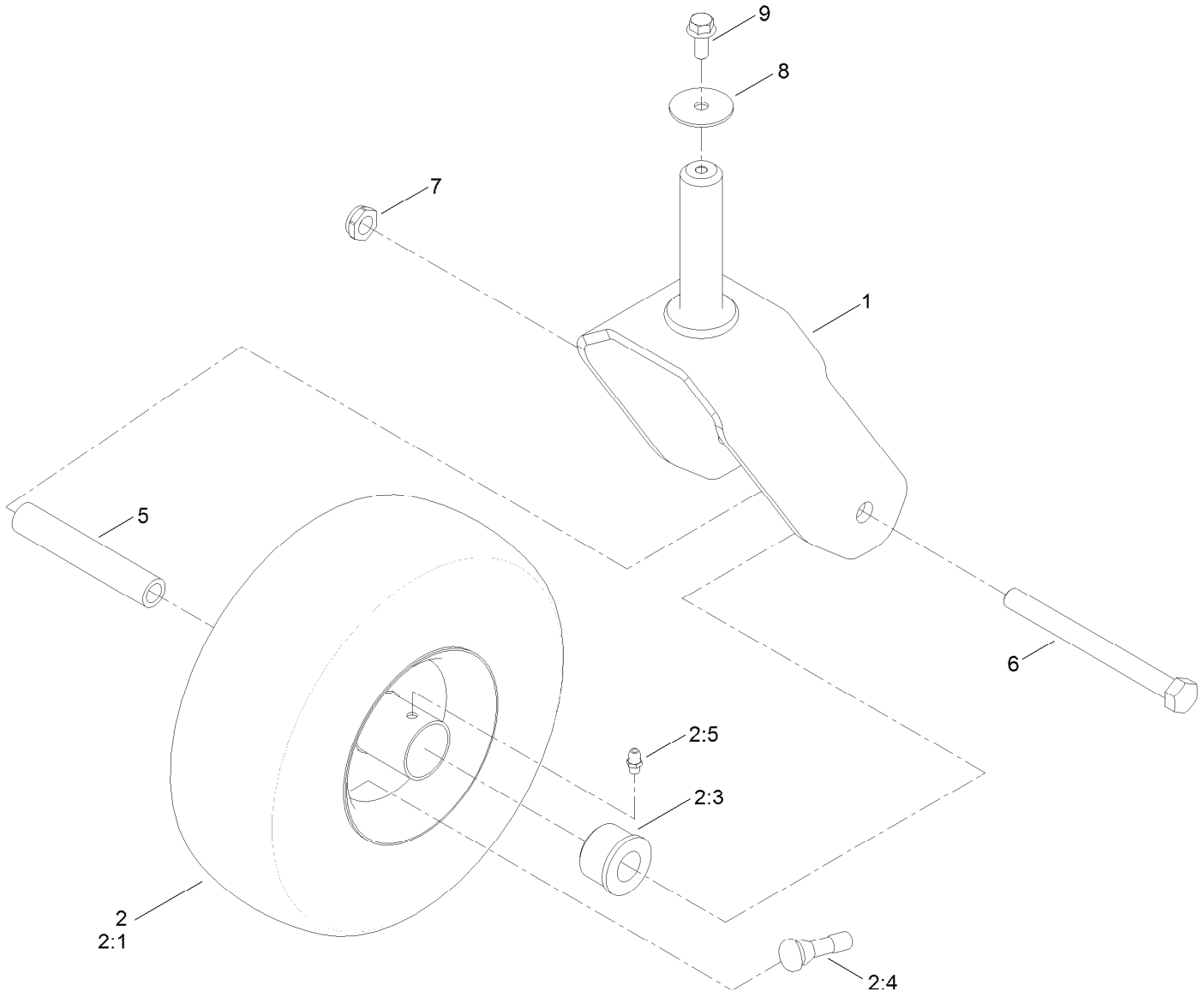

Caster, Wheel and Tire Assembly (continued)

Ref.	Part Number	Qty.	Description
1	139-3274-01	2	Fork ASM
2	139-5842	2	Tire ASM
2:1	140-2736	1	Tire
2:3	114-1640	2	Bushing-Flange
2:4	232-27	1	Stem-Valve
2:5	302-5	1	Fitting-Grease

Ref.	Part Number	Qty.	Description
2:99	105-0844	1	Tube-Inner ● ■
5	138-7240	2	Bushing-Spanner
6	139-2607	2	Screw-HH
7	139-2617	2	Nut-Lock, NI
8	115-1151	2	Washer-Flat
9	139-2598	2	Screw-HHF

● Not illustrated

■ Optional Equipment

Traction Drive Assembly

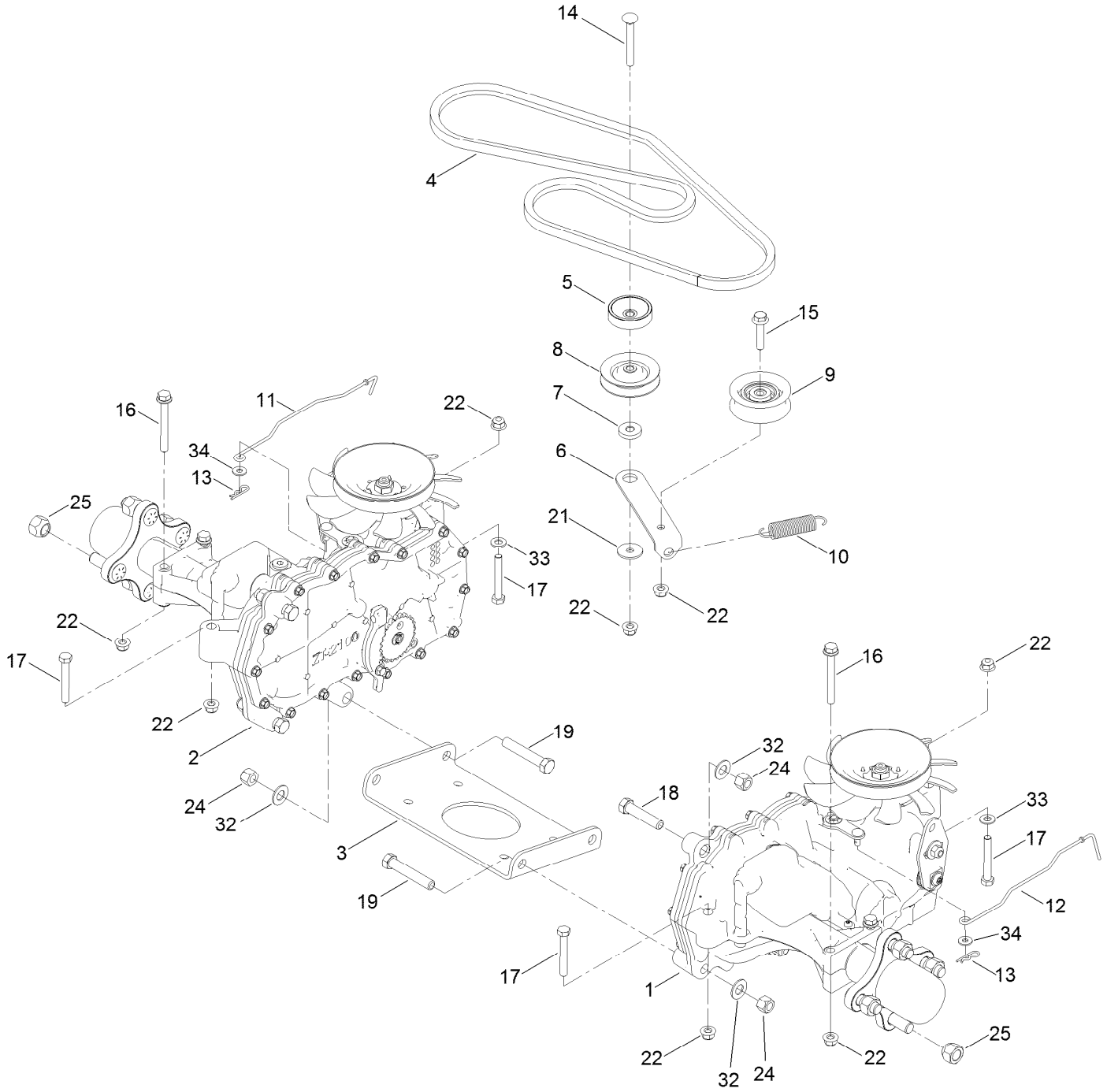

Traction Drive Assembly (continued)

Ref.	Part Number	Qty.	Description
1	139-7450	1	LH Hydro Transaxle ASM
2	139-7451	1	RH Hydro Transaxle ASM
3	138-2571-03	1	Crossplate-Hydro
4	139-2399	1	V-Belt
5	138-9809	1	Spacer
6	138-7276	1	Arm-Idler
7	138-7277	1	Spacer-Arm, Idler
8	68-0030	1	Idler
9	138-7597	1	Pulley-Idler, Flat
10	137-7040	1	Spring-Return, Pedal
11	138-7245	1	Rod-Bypass, RH
12	138-7243	1	Rod-Bypass, LH
13	137-3083	2	Pin-Hair

Ref.	Part Number	Qty.	Description
14	139-2588	1	Screw-CARR
15	140-5024	1	Screw-HHF
16	138-7590	4	Screw-HHF
17	120-9738	4	Screw-HH
18	139-2605	2	Screw-HH
19	139-2603	4	Screw-HH
21	5-4460	1	Washer-Pivot
22	119-4041	10	Nut-HF
24	119-4039	6	Nut-Hex
25	139-2564	8	Nut-Lug
32	139-2610	6	Washer-Flat
33	120-9683	2	Washer-Plain
34	119-8952	2	Washer-Spcl

LH Hydro Transmission Assembly No. 139-7450

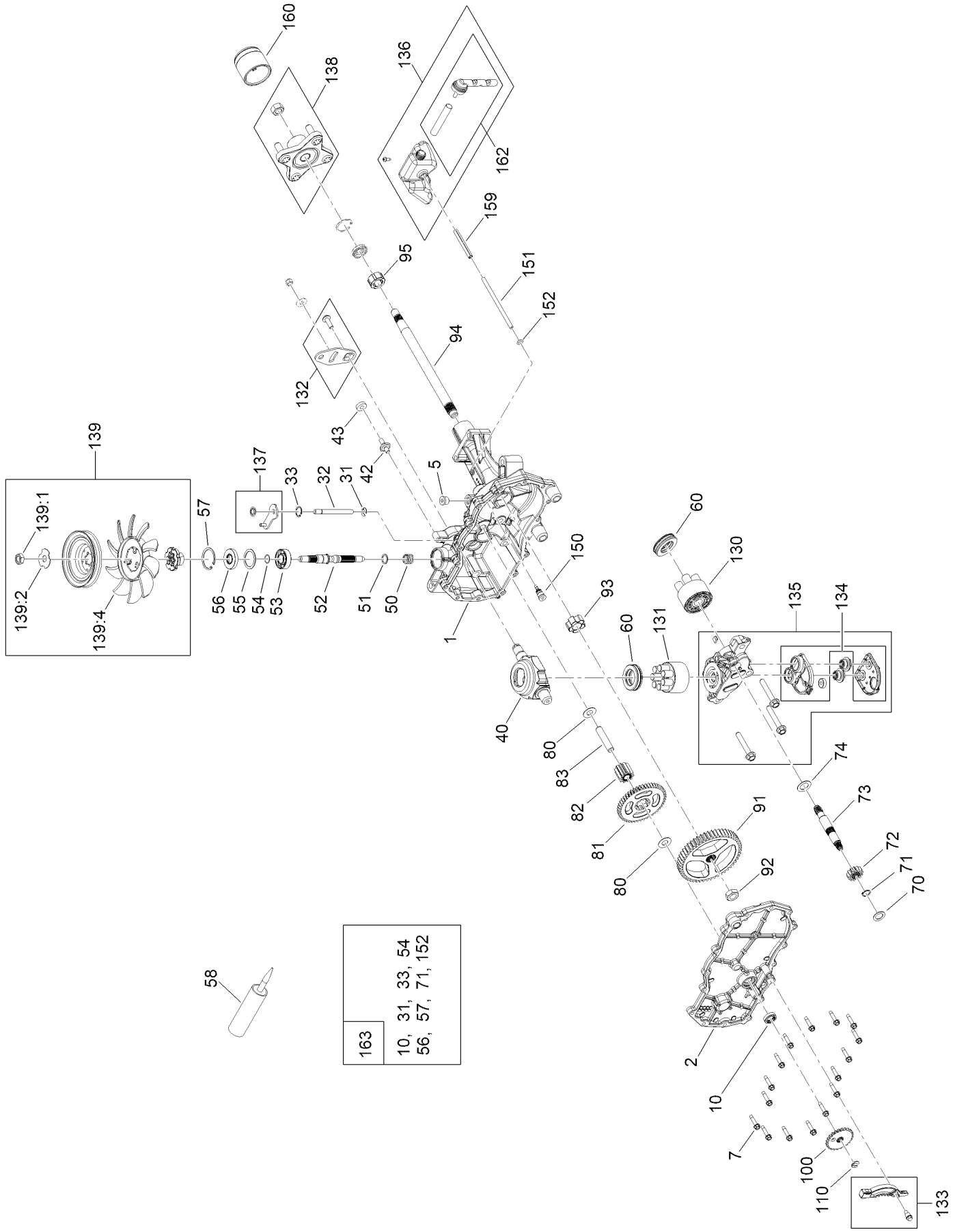

LH Hydro Transmission Assembly No. 139-7450 (continued)

Ref.	Part Number	Qty.	Description
1	120-5532	1	Main Housing ASM
2	120-5534	1	Housing Side Kit
5	104-2189	1	Plug-Thread, Straight
7	117-5359	16	Screw-HHF
10	104-2147	1	Sealant, Silicone - Non-Flammable ●
31	106-8677	1	Ring-Retaining, External
32	106-8678	1	Rod-Bypass
33	106-8679	1	Ring-Retaining, Internal
40	104-5304	1	Swashplate-Trunnion
42	104-2116	1	Stud
43	112-9853	1	Puck-Friction
50	133-1793	1	Spring-Block
51	120-5538	1	Washer
52	104-5306	1	Shaft-Input
53	104-5311	1	Bearing-Ball
54	104-5307	1	Ring-Retaining
55	104-5308	1	Spacer
56	104-5310	1	Seal-Lip
57	104-5309	1	Ring-Retaining
58	104-2147	1	Sealant, Silicone - Non-Flammable
60	94-6922	2	Bearing-Thrust
70	104-5339	1	Washer-Flat
71	104-5340	1	Ring-Retaining
72	104-5316	1	Gear-Pinnion, 13T
73	106-8683	1	Shaft-Motor
74	104-5360	1	Washer
80	94-1933	1	Washer
81	104-5317	1	Gear-10T/48T
82	104-5318	1	Gear-Jackshaft, 10T
83	104-5329	1	Pin-Jackshaft
91	120-5539	1	Gear-Bull
92	104-2142	1	Nut-HJ
93	115-8314	1	Bushing-Inboard
94	120-5540	1	Shaft-Axle
95	120-5541	1	Bearing-Sleeve
100	106-8694	1	Disc-Brake, Cog
110	106-8677	1	Ring-Retaining, External
130	103-2666	1	Cylinder Block Kit
131	110-8561	1	Pump Block ASM
132	117-5362	1	Control Arm Kit
133	106-8688	1	Brake Arm Kit
134	112-9861	1	Center Section Filter Kit
135	114-1634	1	Filter Kit
136	121-5730	1	RH Expansion Tank Kit
137	120-5549	1	Bypass Kit
138	121-5731	1	Hub Kit
139	135-7349	1	Fan And Pulley Kit
139:1	116-9714	1	Nut-HJ
139:2	116-9708	1	Washer-Slotted
139:4	135-7364	1	Fan 7.0 X 10 Blade
150	104-5349	1	Fitting-SAE
151	115-8302	1	Hose
152	104-5361	1	O-Ring
159	121-5728	1	Case-Tube
160	125-0041	1	Cap-Axle
162	139-3278	1	Breather ASM Kit
163	120-7103	1	Seal And Ring Kit

● Not illustrated

RH Hydro Transmission Assembly No. 139-7451

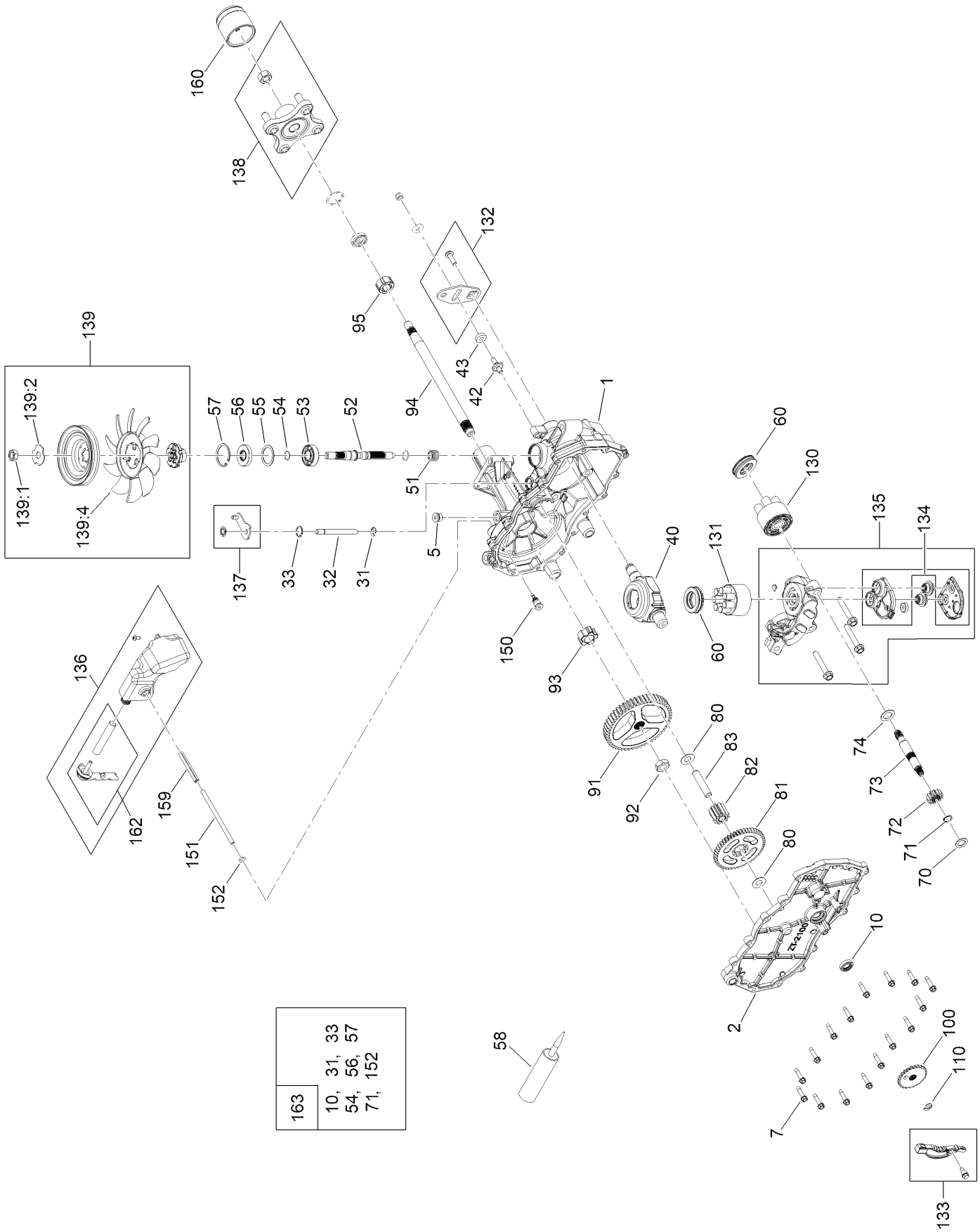

RH Hydro Transmission Assembly No. 139-7451 (continued)

Ref.	Part Number	Qty.	Description
1	120-5531	1	Main Housing ASM
2	120-5533	1	Housing Side Kit
5	104-2189	1	Plug-Thread, Straight
7	117-5359	16	Screw-HHF
10	104-2147	1	Sealant, Silicone - Non-Flammable ●
31	106-8677	2	Ring-Retaining, External
32	106-8678	1	Rod-Bypass
33	106-8679	1	Ring-Retaining, Internal
40	104-5304	1	Swashplate-Trunnion
42	104-2116	1	Stud
43	112-9853	1	Puck-Friction
51	133-1793	1	Spring-Block
51	120-5538	1	Washer
52	104-5306	1	Shaft-Input
53	104-5311	1	Bearing-Ball
54	104-5307	1	Ring-Retaining
55	104-5308	1	Spacer
56	104-5310	1	Seal-Lip
57	104-5309	1	Ring-Retaining
58	104-2147	1	Sealant, Silicone - Non-Flammable
60	94-6922	2	Bearing-Thrust
70	104-5339	1	Washer-Flat
71	104-5340	1	Ring-Retaining
72	104-5316	1	Gear-Pinnion, 13T
73	106-8683	1	Shaft-Motor
74	104-5360	1	Washer
80	94-1933	1	Washer
81	104-5317	1	Gear-10T/48T
82	104-5318	1	Gear-Jackshaft, 10T
83	104-5329	1	Pin-Jackshaft
91	120-5539	1	Gear-Bull
92	104-2142	1	Nut-HJ
93	115-8314	1	Bushing-Inboard
94	120-5540	1	Shaft-Axle
95	120-5541	1	Bearing-Sleeve
100	106-8694	1	Disc-Brake, Cog
110	106-8677	1	Ring-Retaining, External
130	103-2666	1	Cylinder Block Kit
131	110-8561	1	Pump Block ASM
132	117-5362	1	Control Arm Kit
133	106-8688	1	Brake Arm Kit
134	112-9862	1	Center Section Filter Kit
135	114-1634	1	Filter Kit
136	121-5735	1	LH Expansion Tank Kit
137	107-2489	1	Bypass Arm Kit
138	121-5731	1	Hub Kit
139	135-7349	1	Fan And Pulley Kit
139:1	116-9714	1	Nut-HJ
139:2	116-9708	1	Washer-Slotted
139:4	135-7364	1	Fan 7.0 X 10 Blade
150	104-5349	1	Fitting-SAE
151	115-8302	1	Hose
152	104-5361	1	O-Ring
159	121-5728	1	Case-Tube
160	125-0041	1	Cap-Axle
162	139-3278	1	Breather ASM Kit
163	120-7103	1	Seal And Ring Kit

● Not illustrated

Brake Assembly

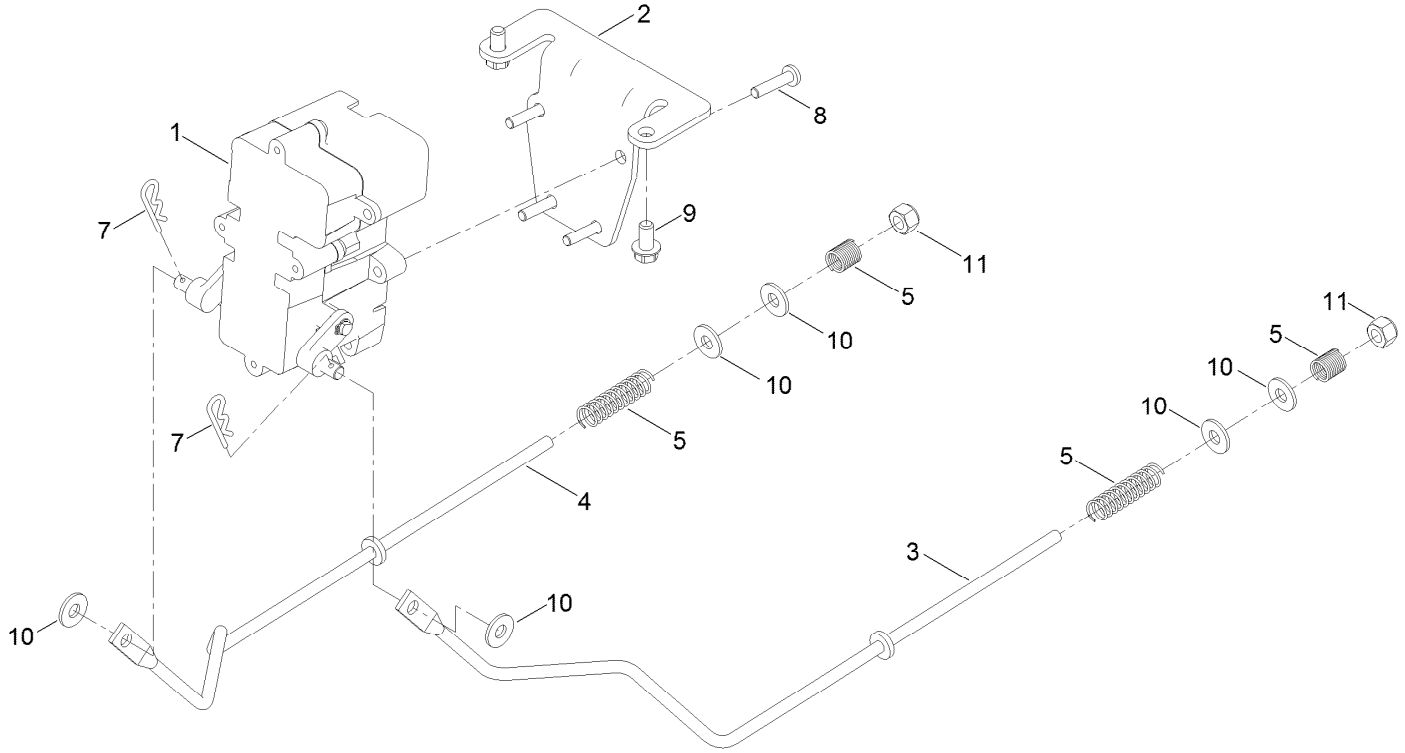

Brake Assembly (continued)

Ref.	Part Number	Qty.	Description
1	138-2514	1	Brake Box ASM
2	133-9284-03	1	Bracket-Mount, Brake
3	138-2591	1	Rod-Brake, LH
4	138-2592	1	Rod-Brake, RH
5	117-1169	4	Spring-Compression
7	137-3083	2	Pin-Hair
8	32144-36	4	Screw-PPH
9	32144-4	2	Screw-HWH
10	119-8952	6	Washer-Spcl
11	137-3088	2	Nut-Hex

Rear Tire Assembly

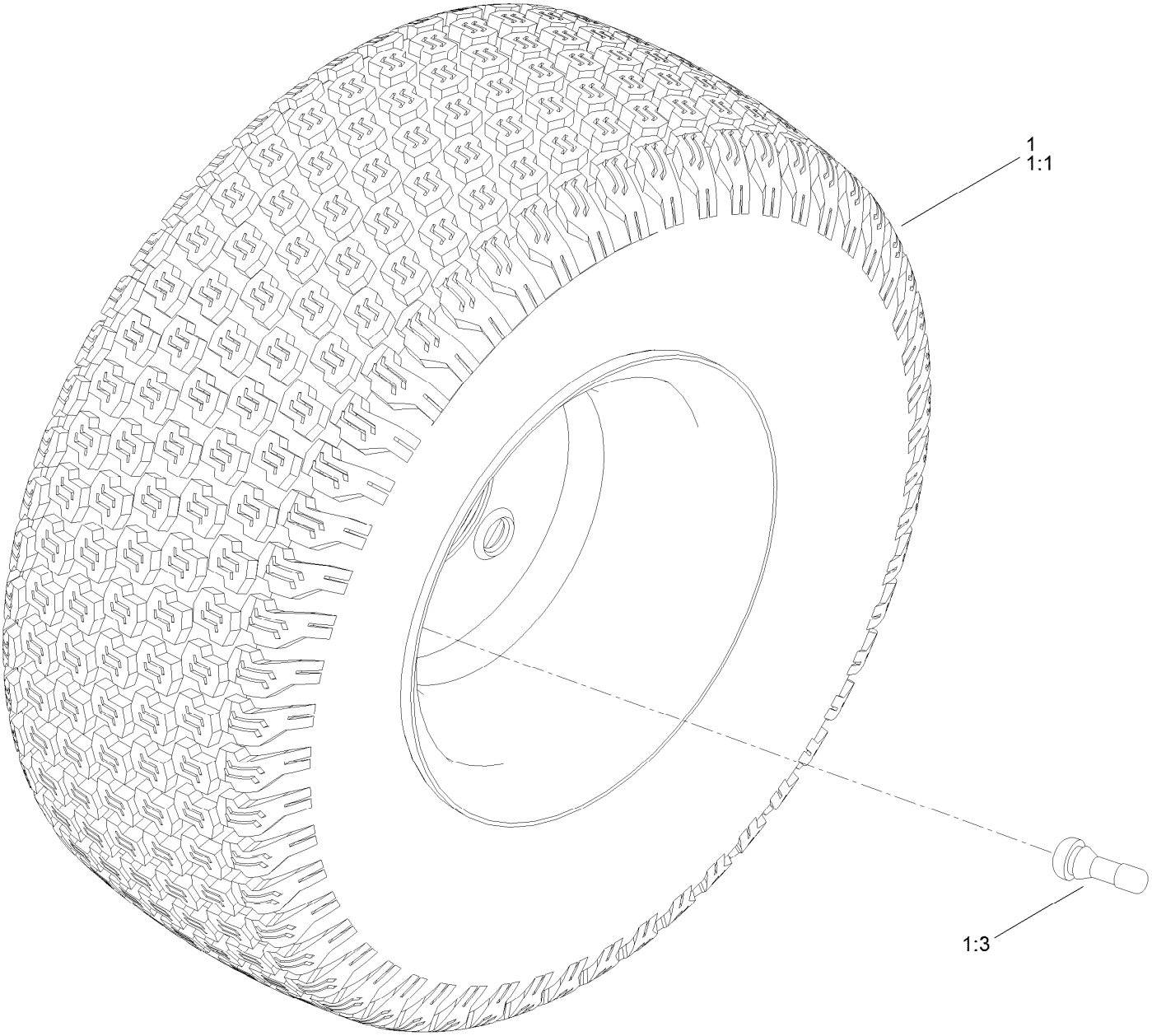

Rear Tire Assembly (continued)

Ref.	Part Number	Qty.	Description
1	139-5846	2	Tire ASM
1:1	140-2729	1	Tire
1:3	232-27	1	Stem-Valve
1:99	107-2491	1	Tube-Tire ●

● Not illustrated

Seat Pan Assembly

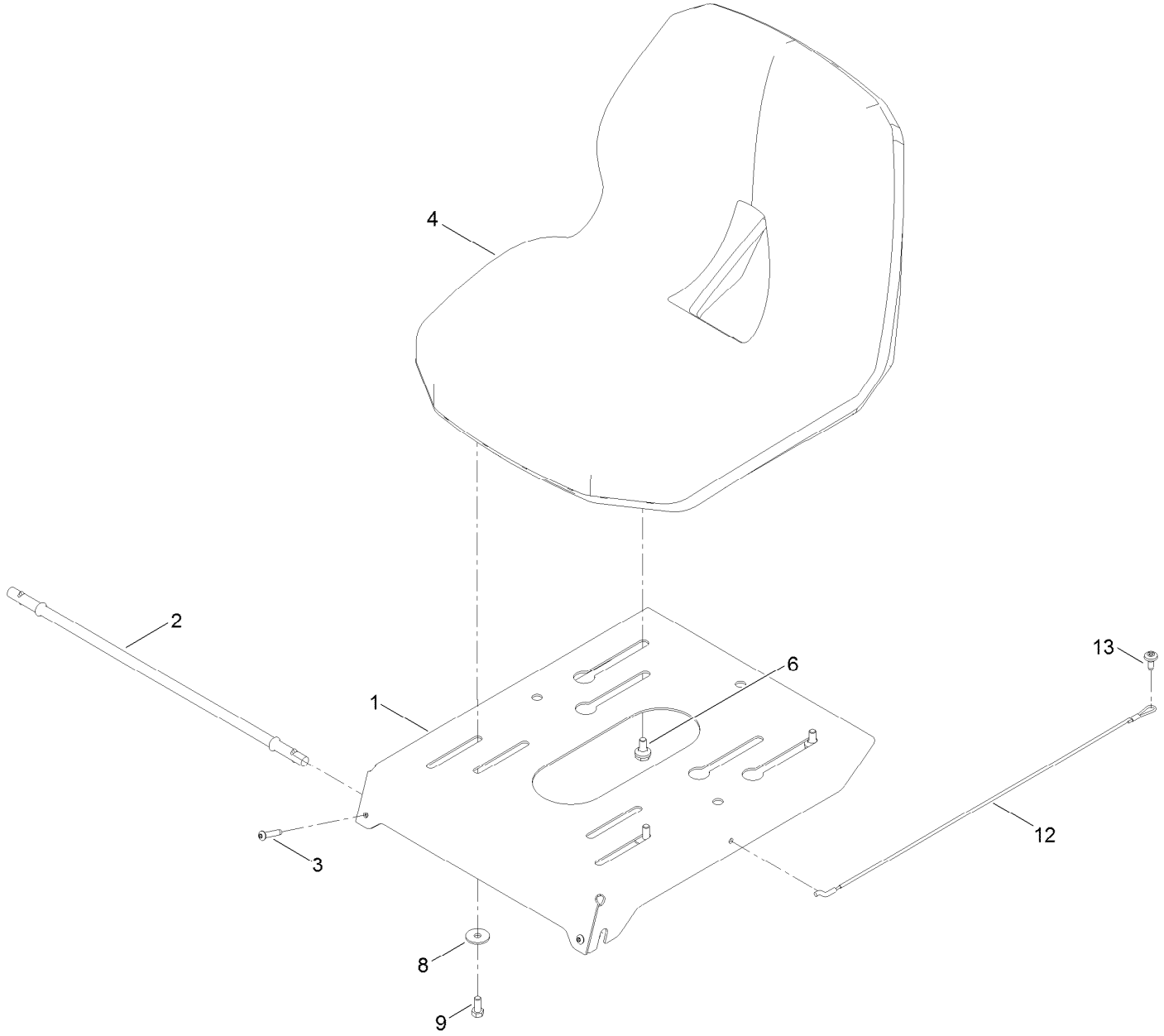

Seat Pan Assembly (continued)

Ref.	Part Number	Qty.	Description
1	138-9781-03	1	Pan-Seat
2	138-7555	1	Rod-Pivot
3	137-3010	2	Screw-BHCS
4	147-5157	1	Seat-16 In
6	37-8771	2	Bolt-Shoulder, HF
8	5-4460	2	Washer-Pivot
9	137-3052	2	Screw-HH
12	139-2398	1	Cable-Lanyard
13	120-7950	1	Screw-Torx

Seat Assembly No. 147-5157

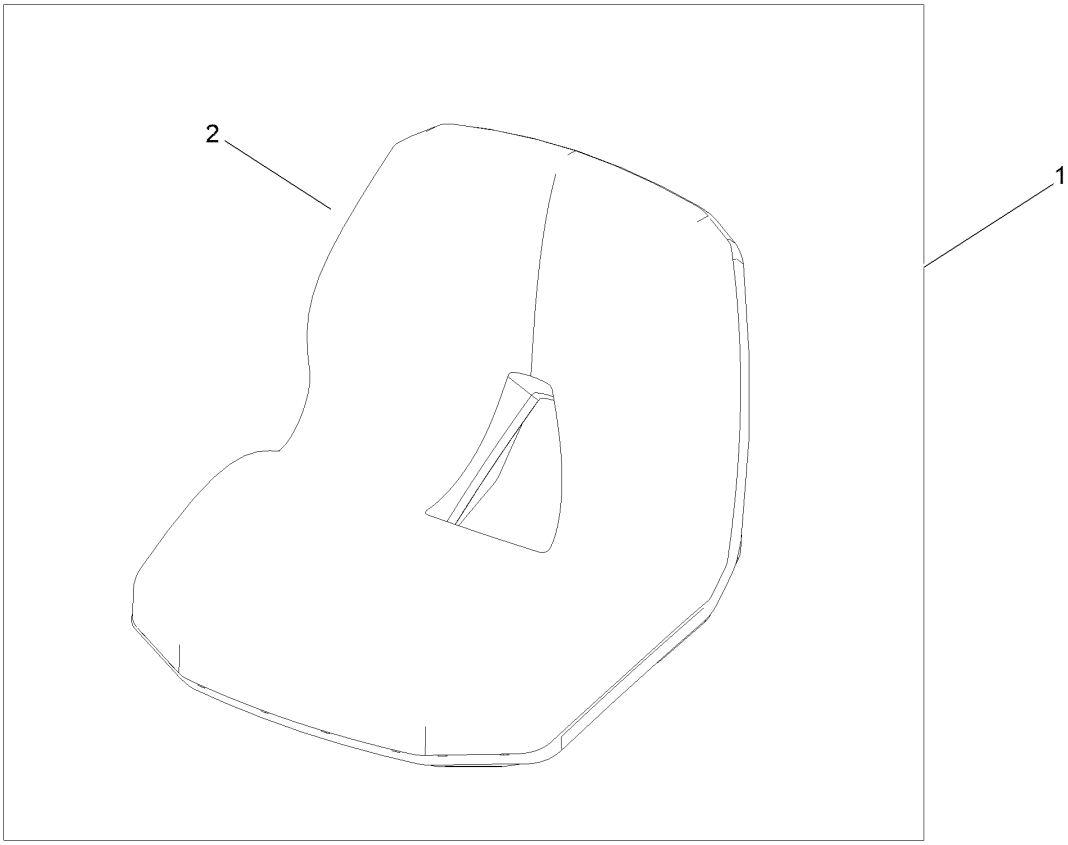

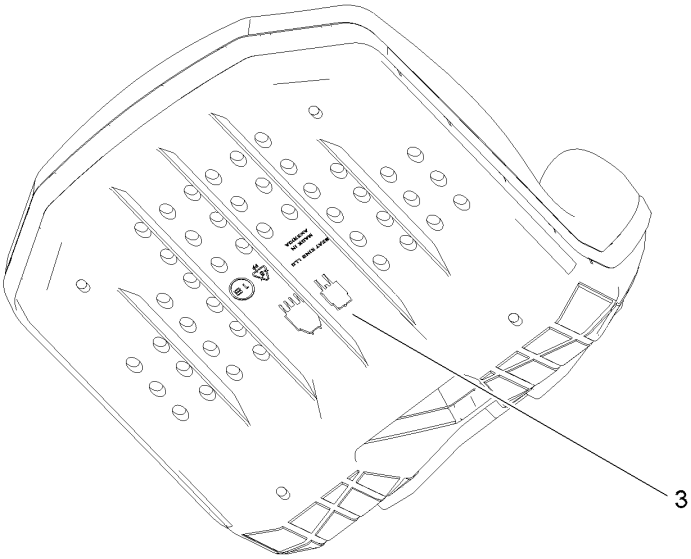

Seat Assembly No. 147-5157 (continued)

Ref.	Part Number	Qty.	Description
1	139-5891	1	Seat-16 In
2	147-2983	1	Cover-Seat
3	82-2190	1	Switch-Bail

Motion Control Assembly

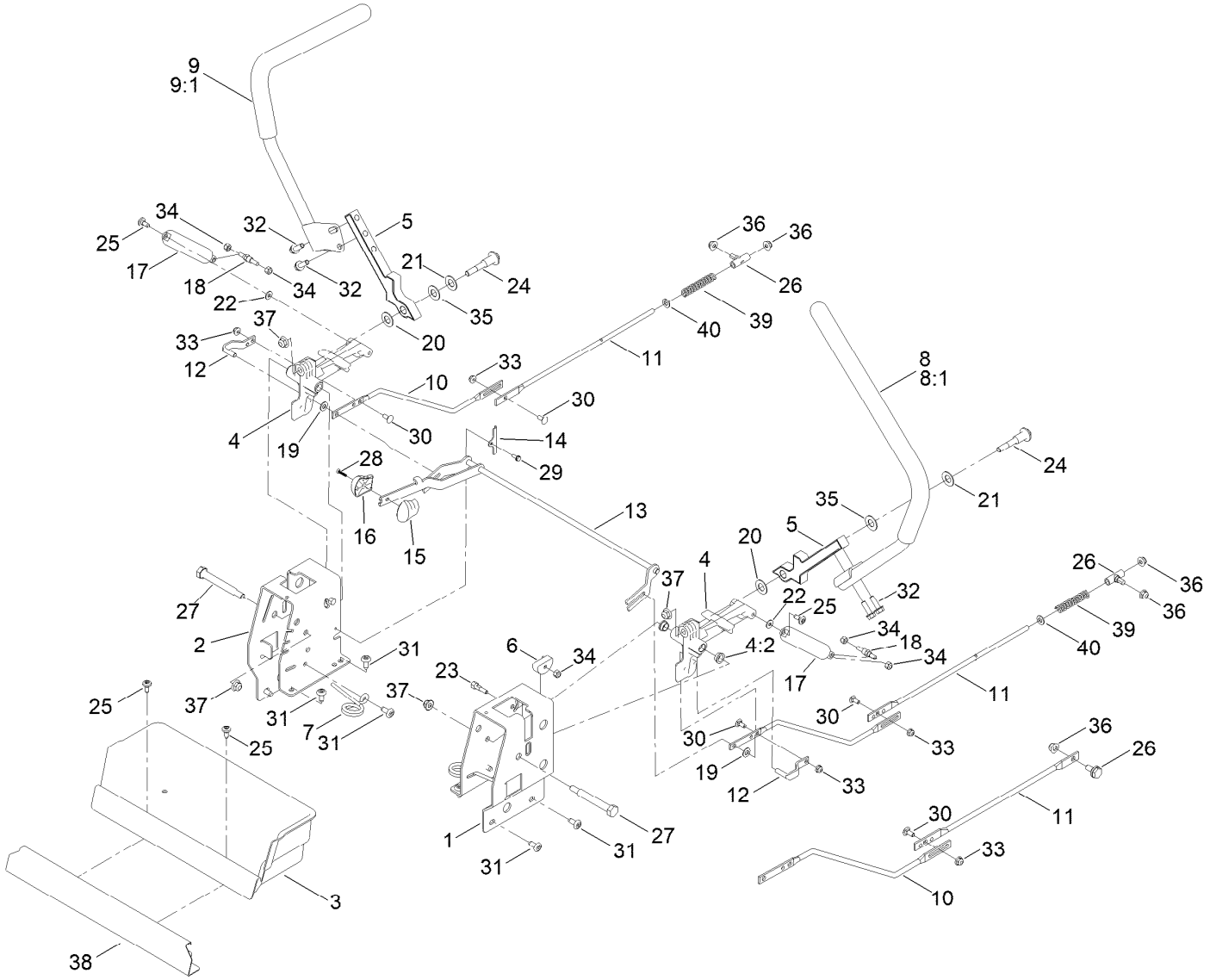

Motion Control Assembly (continued)

Ref.	Part Number	Qty.	Description
1	138-7598-03	1	Plate-Control Box, LH
2	138-7599-03	1	Plate-Control Box, RH
3	139-3279	1	Box-Storage
4	119-3470	2	Actuator Arm ASM
4:2	256-156	2	Bushing-Flange
5	133-9299-05	2	Arm-Control
6	139-5803	2	Eccentric
7	138-7539	2	Spring-Torsion
8	133-7055	1	Handle-Control, LH
8:1	121-0726	1	Grip
9	133-7057	1	Handle-Control, RH
9:1	121-0726	1	Grip
10	138-2580	2	Rod-Hydro, Front
11	144-1818	2	Rod-Hydro, Rear
12	121-1753	2	Pin-Rod, Hydro
13	138-9750	1	Speed Control ASM
14	138-7541	2	Plate-Retainer
15	132-9368	1	Knob-RH
16	132-9369	1	Knob-LH
17	132-6853	2	Damper-Non Cavitating
18	138-7215	2	Stud-Damper
19	93-6079	2	Spacer-Nylon

Ref.	Part Number	Qty.	Description
20	120-2273	2	Washer-Flat
21	119-8925	2	Washer-Belleville
22	119-8952	2	Washer-Spcl
23	139-5811	2	Bolt-Pivot, Eccentric
24	139-2556	2	Bolt-Pivot
25	120-7950	4	Screw-Torx
26	138-7218	2	Mount-Rod, Hydro
27	115-5099	2	Bolt-Pivot
28	94-4496	1	Screw-PPH
29	139-1713	2	Screw-Thd Roll
30	100-1445	4	Bolt-CARR
31	138-9753	10	Screw
32	139-2597	4	Screw-HHF
33	137-3005	4	Nut-HF
34	137-3088	6	Nut-Hex
35	117-1240	2	Washer
36	119-4041	2	Nut-HF
37	119-4042	4	Nut-HF, NI
38	139-3280-01	1	Plate-Kick
39	138-7252	2	Spring-Compression
40	120-9683	2	Washer-Plain

Engine and Muffler Assembly

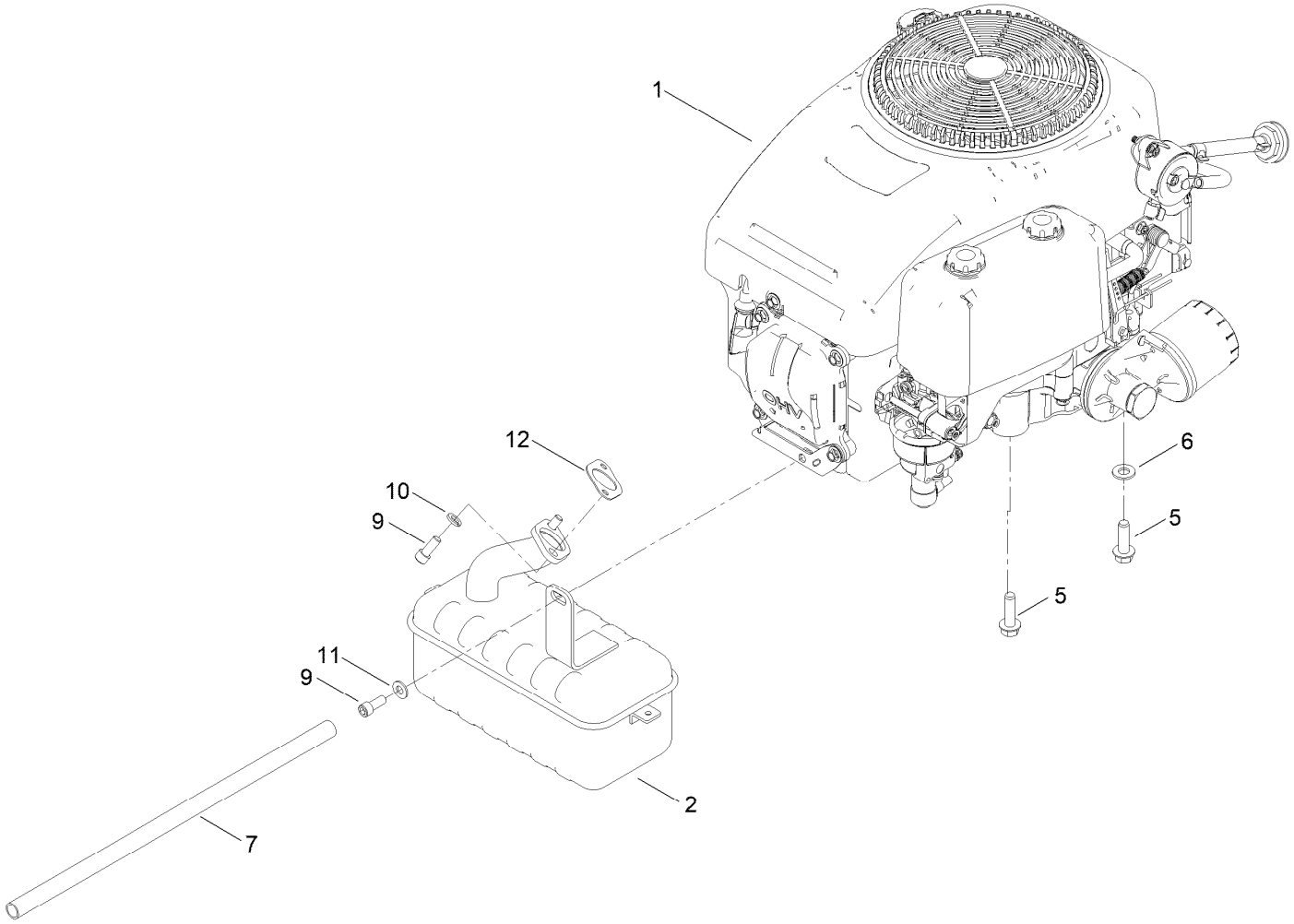

Engine and Muffler Assembly (continued)

Ref.	Part Number	Qty.	Description
1	139-0605	1	Engine-1P92F-1
2	130-0691	1	Muffler
5	139-2576	4	Screw-HWH
6	115-1166	3	Washer-Plain
7	106-7022	1	Tube-Drain, Oil
9	3274-10	3	Screw-HSH
10	136-8682	2	Washer-Lock
11	120-9683	1	Washer-Plain
12	120-4317	1	Gasket-Exhaust

Fuel System Assembly

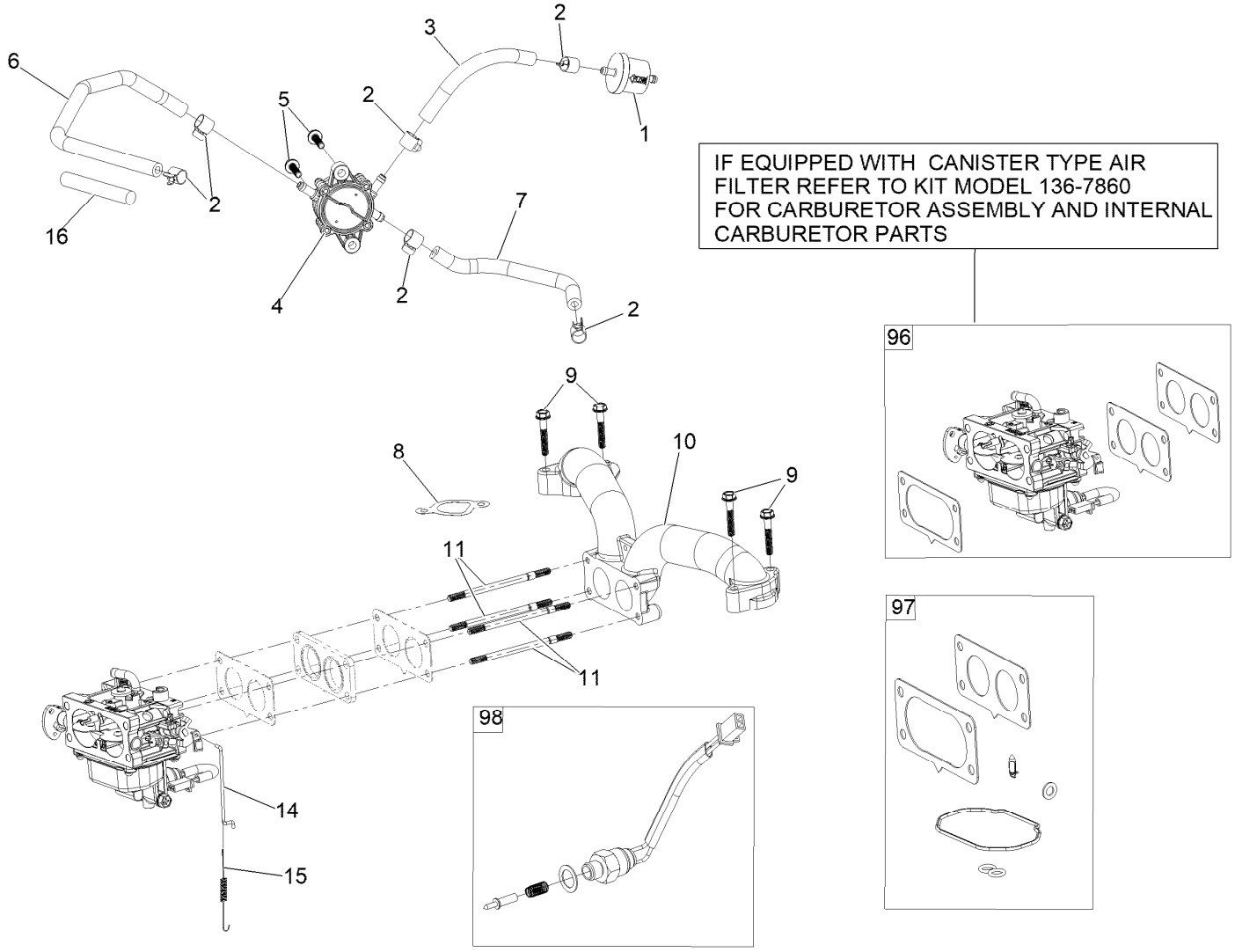

Fuel System Assembly (continued)

Ref.	Part Number	Qty.	Description
1	139-0717	1	Filter-Fuel
2	139-0719	4	Clamp-Fuel Hose
3	120-4371	1	Hose-Fuel
4	139-0685	1	Pump-Fuel
5	120-4232	2	Screw-HHF
6	121-0114	2	Clamp-Hose
7	136-7830	1	Line-Pulse
8	120-4287	1	Clamp-J
9	120-4217	1	Screw-Shoulder, HH
10	120-4370	1	Hose-Fuel
11	120-4249	1	Insulator-Carburetor
14	120-4202	2	Stud-Mount, Carburetor
15	120-4248	1	Shield-Heat
16	120-4216	1	Screw-HHF
96	127-9194	1	Carb Repair Kit With Gaskets
97	127-9190	1	Solenoid Kit
98	136-7826	1	Carburetor Kit
99	133-9929	1	High Altitude Kit ●

● Not illustrated

Air Intake and Filtration Assembly

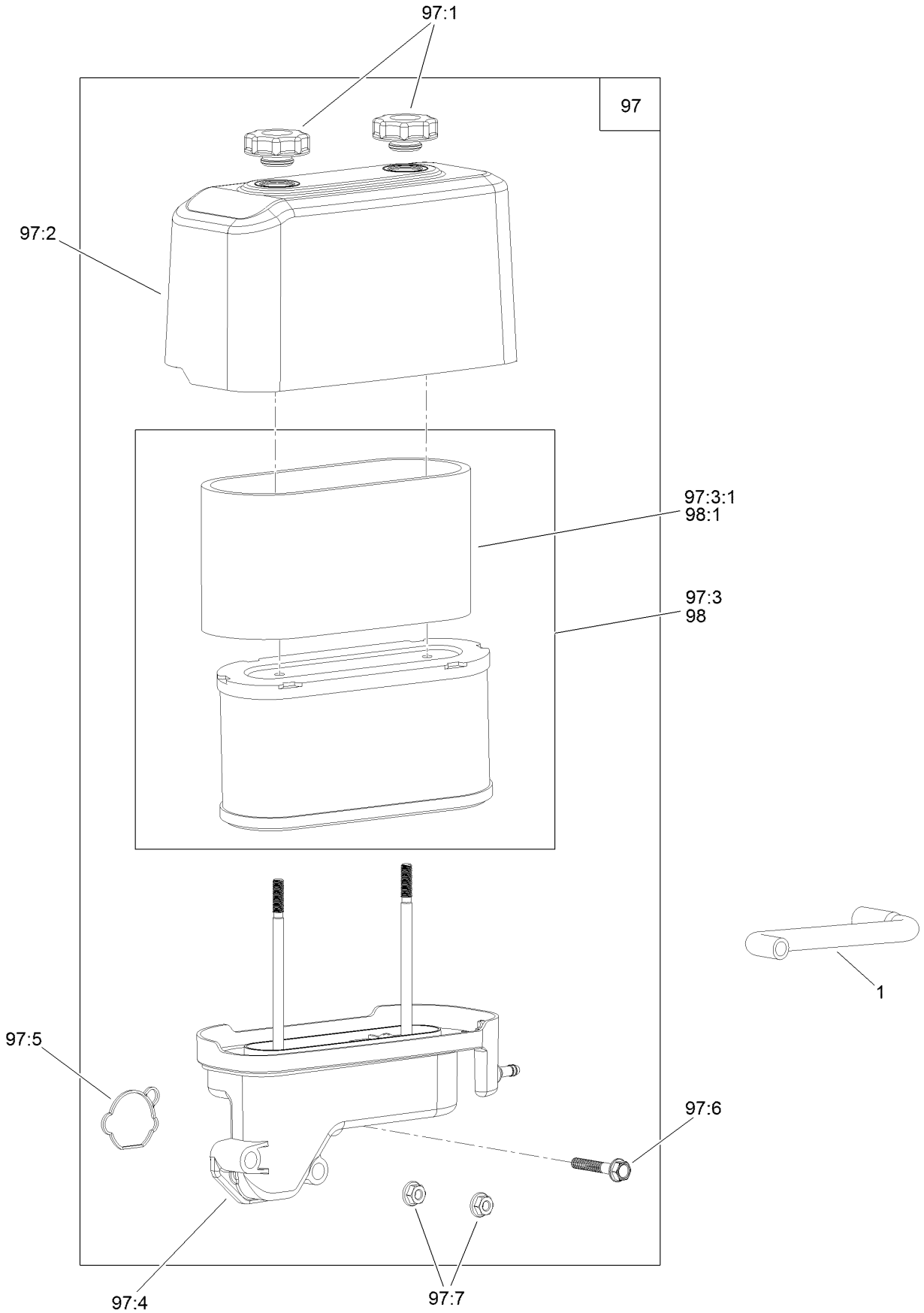

Air Intake and Filtration Assembly (continued)

Ref.	Part Number	Qty.	Description
1	136-7829	1	Tube-Breather
97	136-7814	1	Air Filter ASM
97:1	120-4312	2	Nut-Speed
97:2	120-4311	1	Cover-Filter, Air
97:3	136-7809	1	Air Filter Kit
97:3:1	136-7807	1	Prefilter

Ref.	Part Number	Qty.	Description
97:4	127-9191	1	Base-Filter, Air
97:5	127-9185	1	Gasket-Carburetor
97:6	120-4284	1	Screw-HHF
97:7	120-4236	2	Nut-Flange
98	136-7809	1	Air Filter Kit
98:1	136-7807	1	Prefilter

Ignition and Electrical Assembly

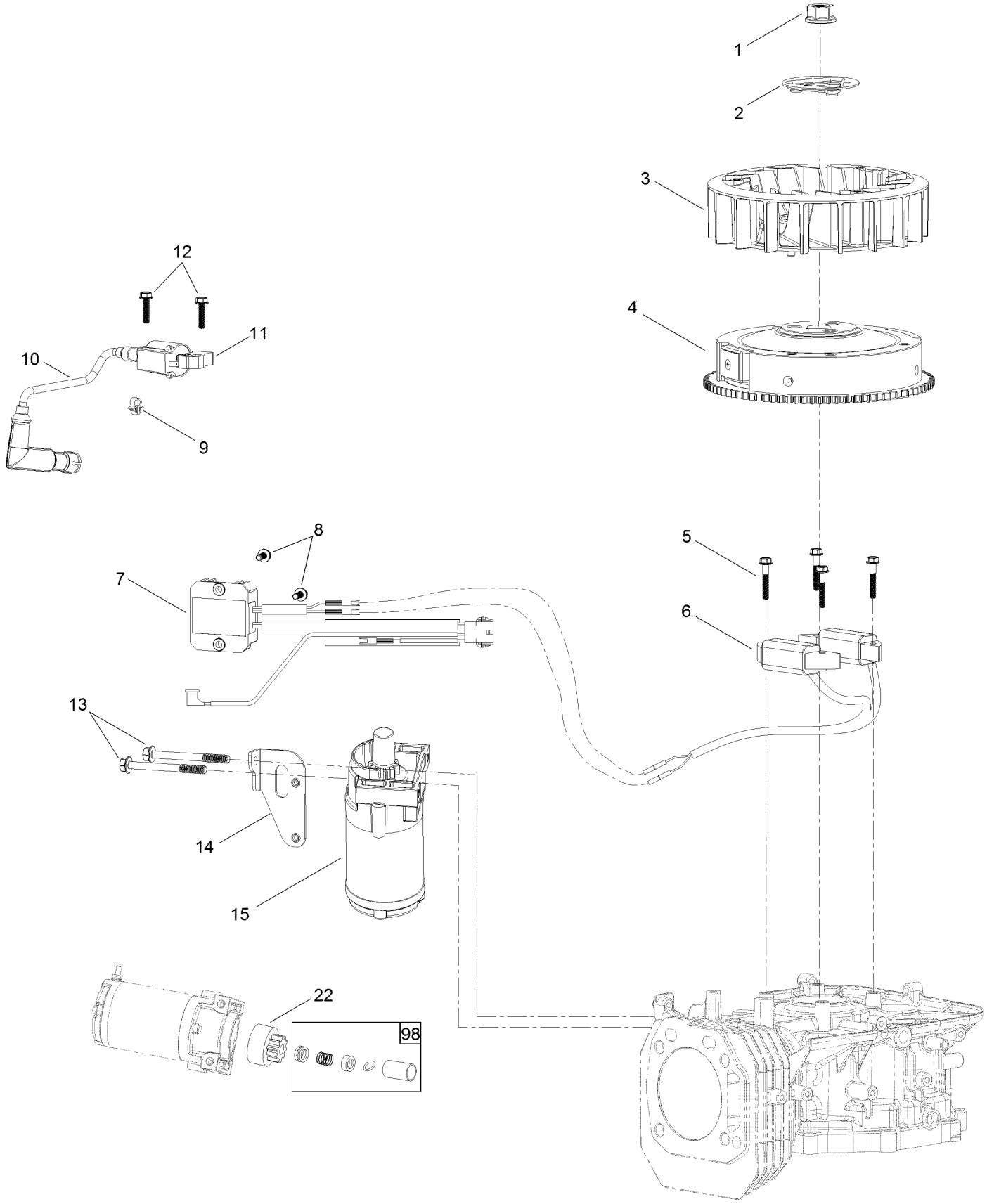

Ignition and Electrical Assembly (continued)

Ref.	Part Number	Qty.	Description
1	120-4213	1	Nut-Flange
2	120-4212	1	Pulley-Starter
3	120-4211	1	Fan-Cooling
4	120-4399	1	Flywheel
5	120-4223	4	Screw-HHF
6	136-7833	1	Alternator
7	136-7836	1	Voltage Regulator
8	120-4216	3	Screw-HHF
9	120-4316	1	Clamp-Wire
10	120-4226	1	Boot-Plug, Spark
11	136-7831	1	Ignition Coil ASM
12	120-4225	2	Screw-HHF
13	120-4231	2	Screw-HHF
14	120-4230	1	Bracket-Starter
15	136-7832	1	Motor-Starter
22	133-1562	1	Pinion-Starter
98	120-4392	1	Starter Repair Kit

Crankcase Assembly

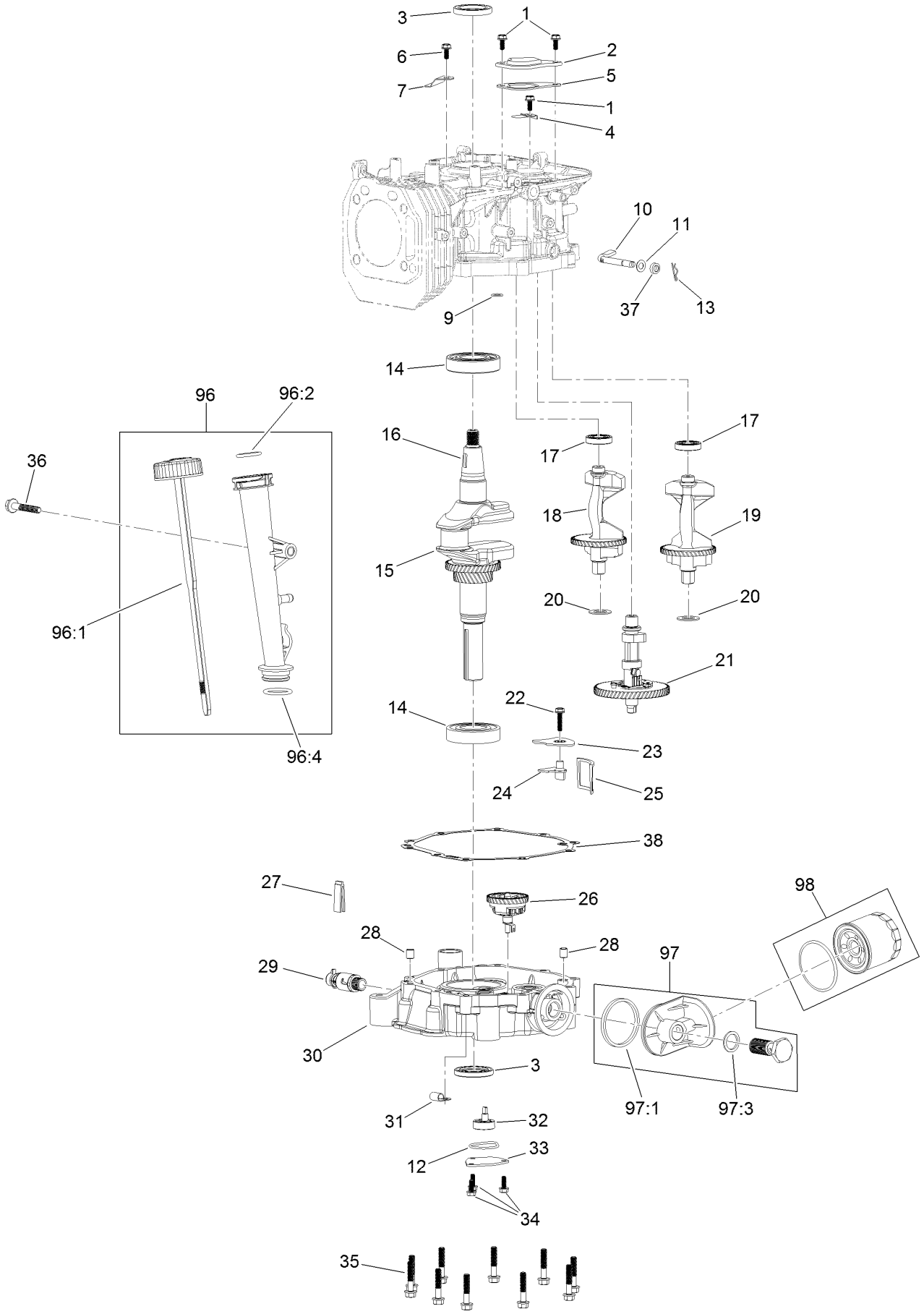

Crankcase Assembly (continued)

Ref.	Part Number	Qty.	Description
1	120-4216	3	Screw-HHF
2	120-4265	1	Plate-Breather
3	120-4267	2	Seal-Oil
4	120-4263	1	Valve-Reed
5	120-4264	1	Gasket-Breather
6	120-4234	1	Screw-HHF
7	120-4268	1	Retainer
9	120-4262	1	O-Ring
10	136-7887	1	Shaft-Governor
11	120-4258	1	Washer-Plain
12	120-4343	1	Seal-Pump, Oil
13	120-4256	1	Pin-Hair
14	120-4261	2	Bearing-Ball
15	120-4293	1	Crankshaft
16	120-4320	1	Key-Woodruff
17	120-4266	2	Bearing-Ball
18	127-9179	1	Shaft-Balance, R
19	127-9180	1	Shaft-Balance, L
20	136-7886	2	Washer
21	120-4297	1	Camshaft
22	120-4225	1	Screw-HHF
23	120-4342	1	Cover-Strainer, Oil
24	120-4279	1	Plate-Baffle, Oil

Ref.	Part Number	Qty.	Description
25	120-4341	1	Strainer-Oil
26	136-7834	1	Gear-Governor
27	120-4275	1	Deflector-Oil, Rubber
28	120-4274	2	Pin-Dowel
29	120-4321	1	Valve-Drain, Oil
30	136-7828	1	Cover-Crankcase
31	127-9188	1	Clamp-Hose
32	120-4344	1	Oil Pump ASM
33	120-4270	1	Cover-Pump, Oil
34	120-4232	3	Screw-HHF
35	120-4273	10	Screw-HHF
36	120-4284	1	Screw-HHF
37	120-4257	1	Seal-Oil
38	120-4260	1	Gasket-Crankcase
96	120-4355	1	Dipstick And Tube Kit
96:1	120-4350	1	Dipstick ASM
96:2	120-4348	1	O-Ring
96:4	120-4282	1	O-Ring
97	120-4363	1	Oil Adaptor Kit
97:1	120-4362	1	Seal-Adaptor, Oil
97:3	120-4360	1	Washer-Filter, Oil
98	136-7848	1	Filter-Oil

Governor Control Assembly

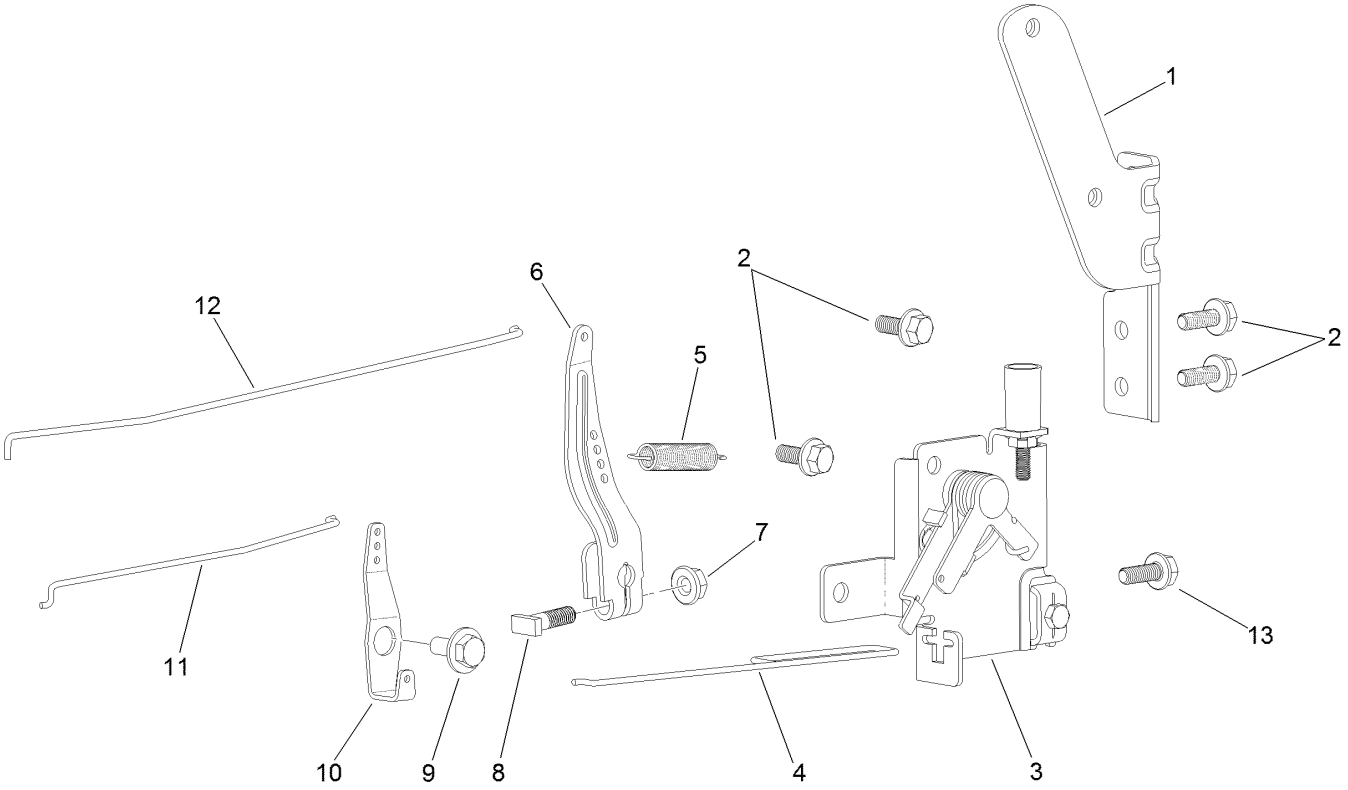

Governor Control Assembly (continued)

Ref.	Part Number	Qty.	Description
1	120-4357	1	Bracket-Pump, Fuel
2	120-4234	4	Screw-HHF
3	120-4358	1	Control-Throttle
4	120-4243	1	Rod-Throttle
5	120-4337	1	Spring-Governor
6	120-4237	1	Arm-Governor
7	120-4236	1	Nut-Flange
8	120-4238	1	Bolt-Arm, Governor
9	120-4241	1	Screw-Shoulder, HHF
10	120-4242	1	Bellcrank-Choke
11	120-4240	1	Rod-Choke
12	120-4239	1	Rod-Governor
13	120-4232	1	Screw-HHF

Piston and Cylinder Head Assembly

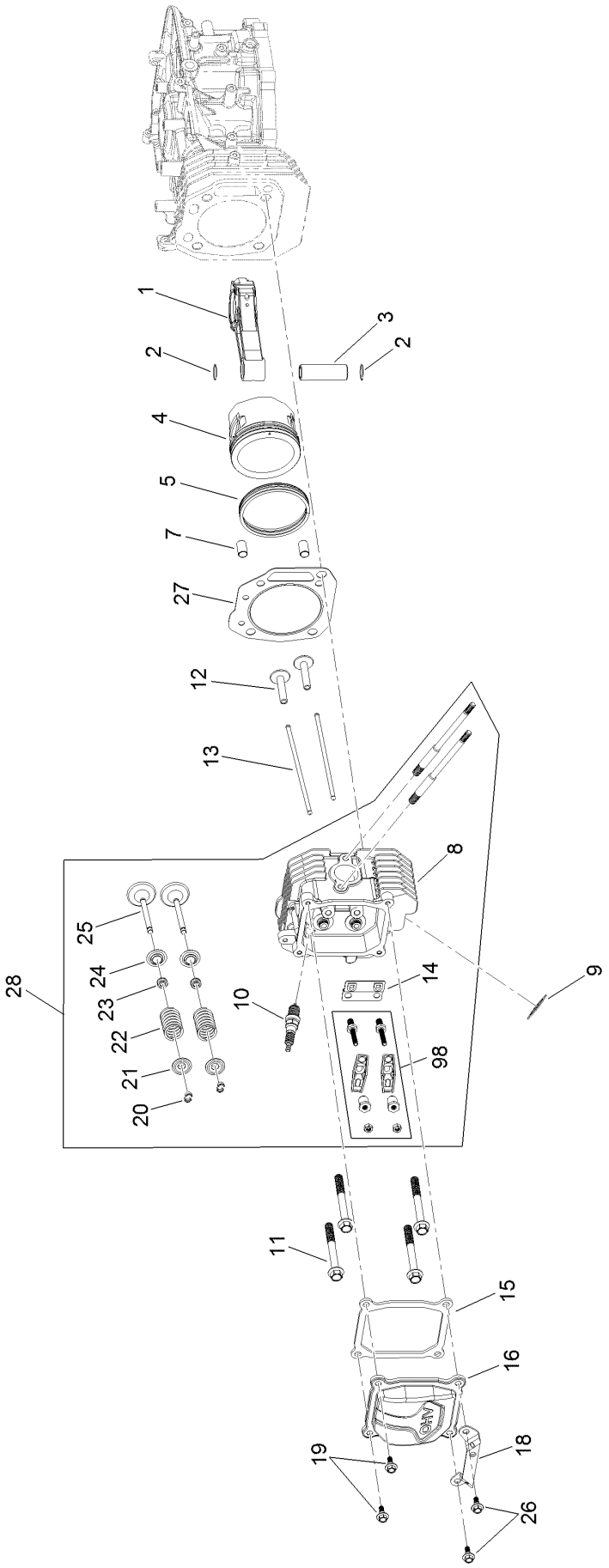

Piston and Cylinder Head Assembly (continued)

Ref.	Part Number	Qty.	Description
1	120-4292	1	Connecting Rod ASM
2	120-4288	2	Ring-Retaining, Piston Pin
3	120-4291	1	Pin-Piston
4	120-4290	1	Piston
5	120-4289	1	Ring Set
7	120-4200	2	Pin-Dowel
8	120-4203	1	Head-Cylinder
9	120-4317	1	Gasket-Exhaust
10	77-7330	1	Plug-Spark
11	120-4205	4	Screw-HHF
12	120-4298	2	Lifter-Valve
13	120-4340	2	Rod-Push
14	120-4300	1	Plate-Guide, Push Rod
15	120-4206	1	Gasket-Cover, Valve
16	120-4207	1	Cover-Valve
18	120-4345	1	Bracket-Muffler
19	120-4209	2	Screw-Shoulder, HHF
20	120-4307	4	Keeper-Valve
21	120-4306	2	Retainer-Spring, Valve
22	120-4305	2	Spring-Valve
23	120-4304	2	Seal-Stem, Valve
24	120-4303	2	Seat-Spring, Valve
25	120-4302	2	Valve Set
26	120-4210	2	Screw-Shoulder, HHF
27	120-4201	1	Gasket-Cyclinder
28	136-7888	1	Complete Head ASM
98	136-7885	1	Rocker Arm Kit

Blower Housing Assembly

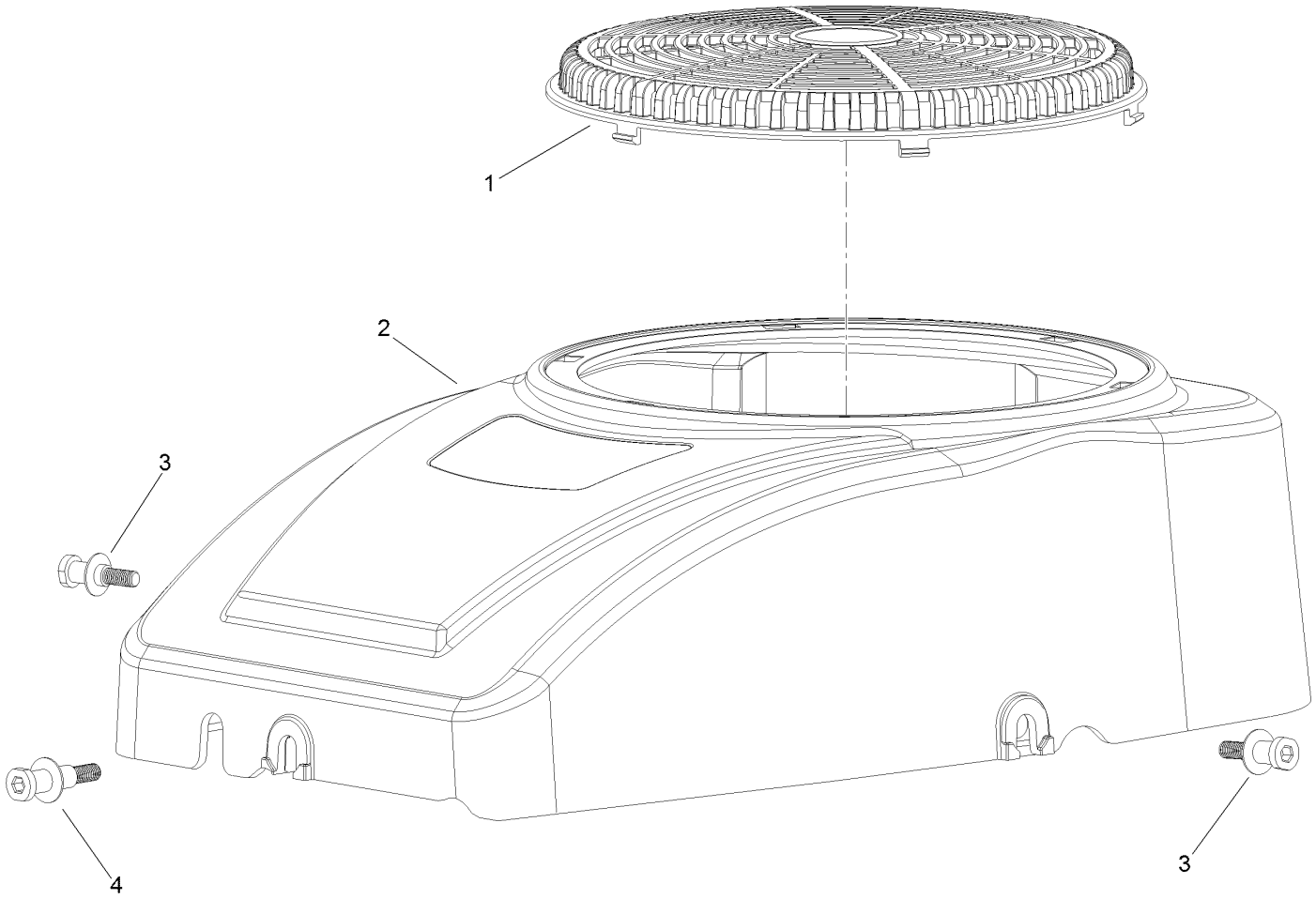

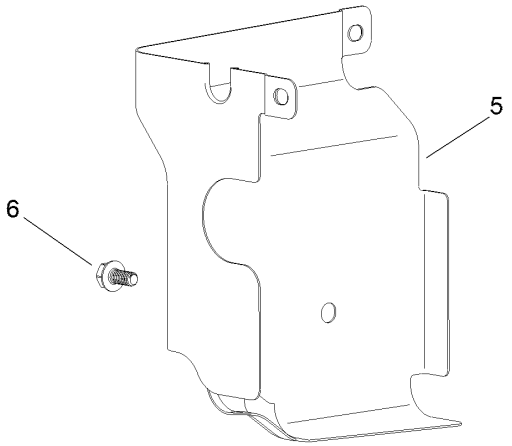

Blower Housing Assembly (continued)

Ref.	Part Number	Qty.	Description
1	120-4219	1	Screen-Stationary
2	120-4218	1	Shroud-Fan
3	120-4217	2	Screw-Shoulder, HH
4	120-4214	1	Screw-Shoulder, HH
5	120-4215	1	Shield
6	120-4216	1	Screw-HHF

Gasket and Seal Kit

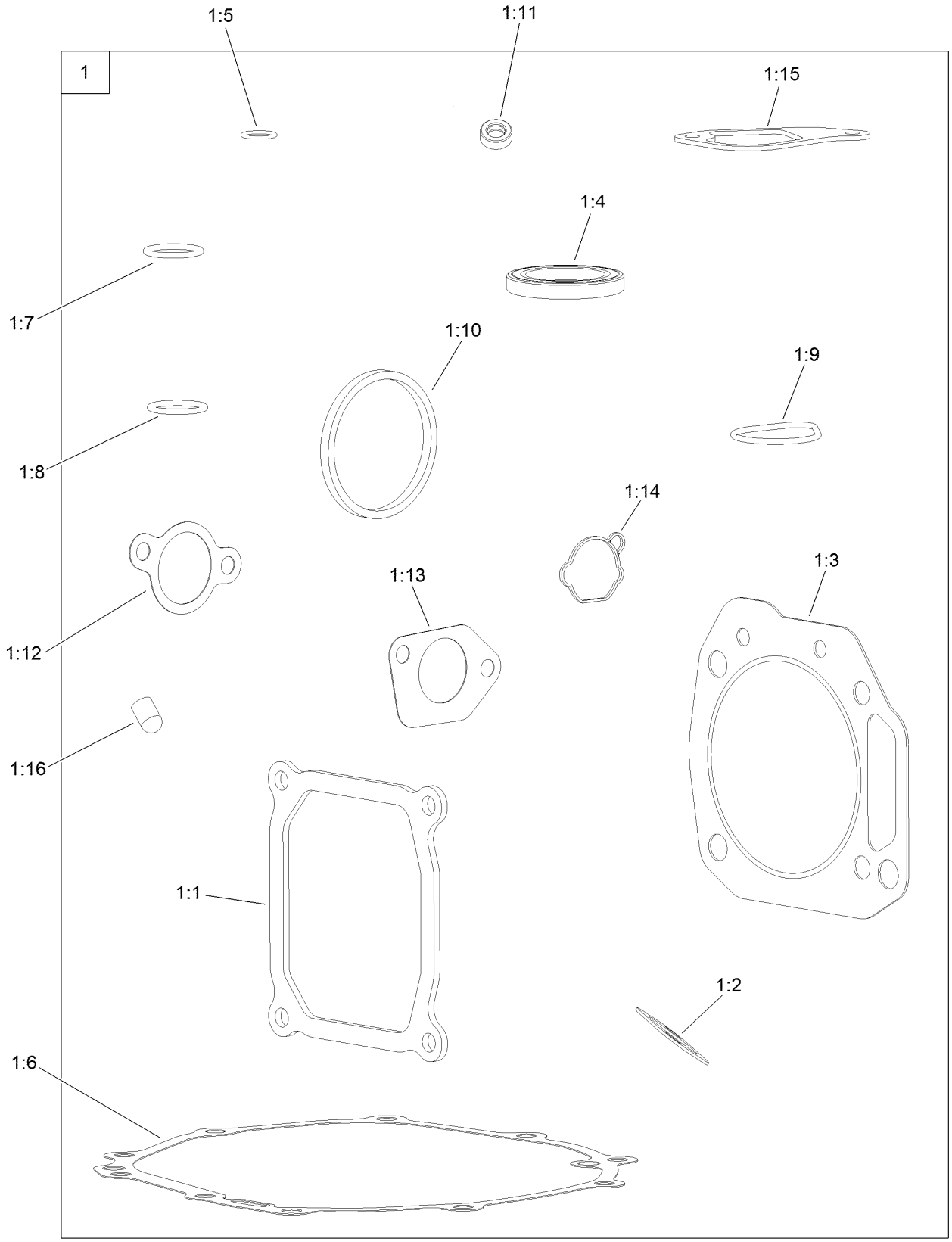

Gasket and Seal Kit (continued)

Ref.	Part Number	Qty.	Description
1	127-9192	1	Gasket And Seal Kit
1:1	120-4206	1	Gasket-Cover, Valve
1:2	120-4317	1	Gasket-Exhaust
1:3	120-4201	1	Gasket-Cyclinder
1:4	120-4267	2	Seal-Oil
1:5	120-4262	1	O-Ring
1:6	120-4260	1	Gasket-Crankcase
1:7	120-4348	1	O-Ring
1:8	120-4282	1	O-Ring
1:9	120-4343	1	Seal-Pump, Oil
1:10	120-4362	1	Seal-Adaptor, Oil
1:11	120-4257	1	Seal-Oil
1:12	120-4250	1	Gasket-Carburetor
1:13	120-4247	2	Gasket-Carburetor
1:14	127-9185	1	Gasket-Carburetor
1:15	120-4264	1	Gasket-Breather
1:16	127-9189	1	Cap-Seal

Body Styling and Fuel Pod Assembly

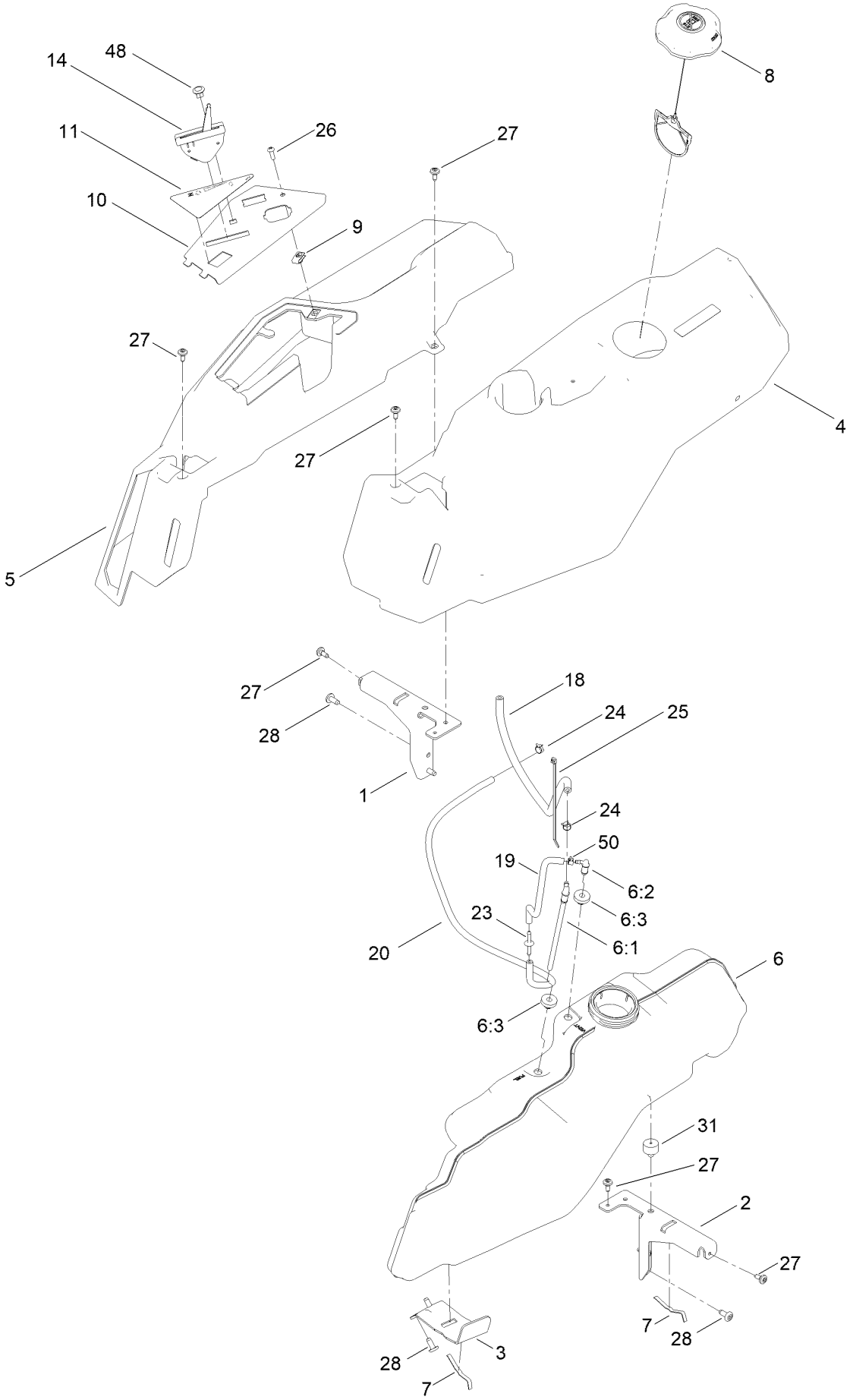

Body Styling and Fuel Pod Assembly (continued)

Ref.	Part Number	Qty.	Description
1	138-6070-03	1	Support-Pod, RH
2	138-6071-03	1	Support-Pod, LH
3	139-3271-03	1	Support-Tank, Fuel
4	138-6074	1	Pod-LH
5	138-6075	1	Pod-RH
6	144-5304	1	Tank-Fuel ASM
6:1	139-1091	1	Connector-Elbow, 90 DEG
6:2	144-5302	1	Fitting-Elbow 90
6:3	46-6560	2	Bushing
7	609830	2	Spring
8	137-4119	1	Cap-Fuel, Ratcheting
9	107069	1	Clip
10	139-2380-03	1	Panel - Control
11	140-2716	1	Decal-Panel Control

Ref.	Part Number	Qty.	Description
14	139-3266	1	Cable-Throttle And Choke
18	108-4582	1	Hose-Fuel
19	136-6345	1	Hose-Fuel
20	110-3254	1	Hose-Fuel
23	144-1983	1	Adapter Orifice
24	2412-98	2	Clamp-Hose
25	614249	1	Tie-Cable
26	3258-166	1	Screw-PRH
27	120-7950	6	Screw-Torx
28	138-9753	6	Screw
31	120-7893	1	Bumper-Grommet
48	140-2750	1	Plug-Dash
50	2412-80	1	Clamp-Hose

Electrical Assembly

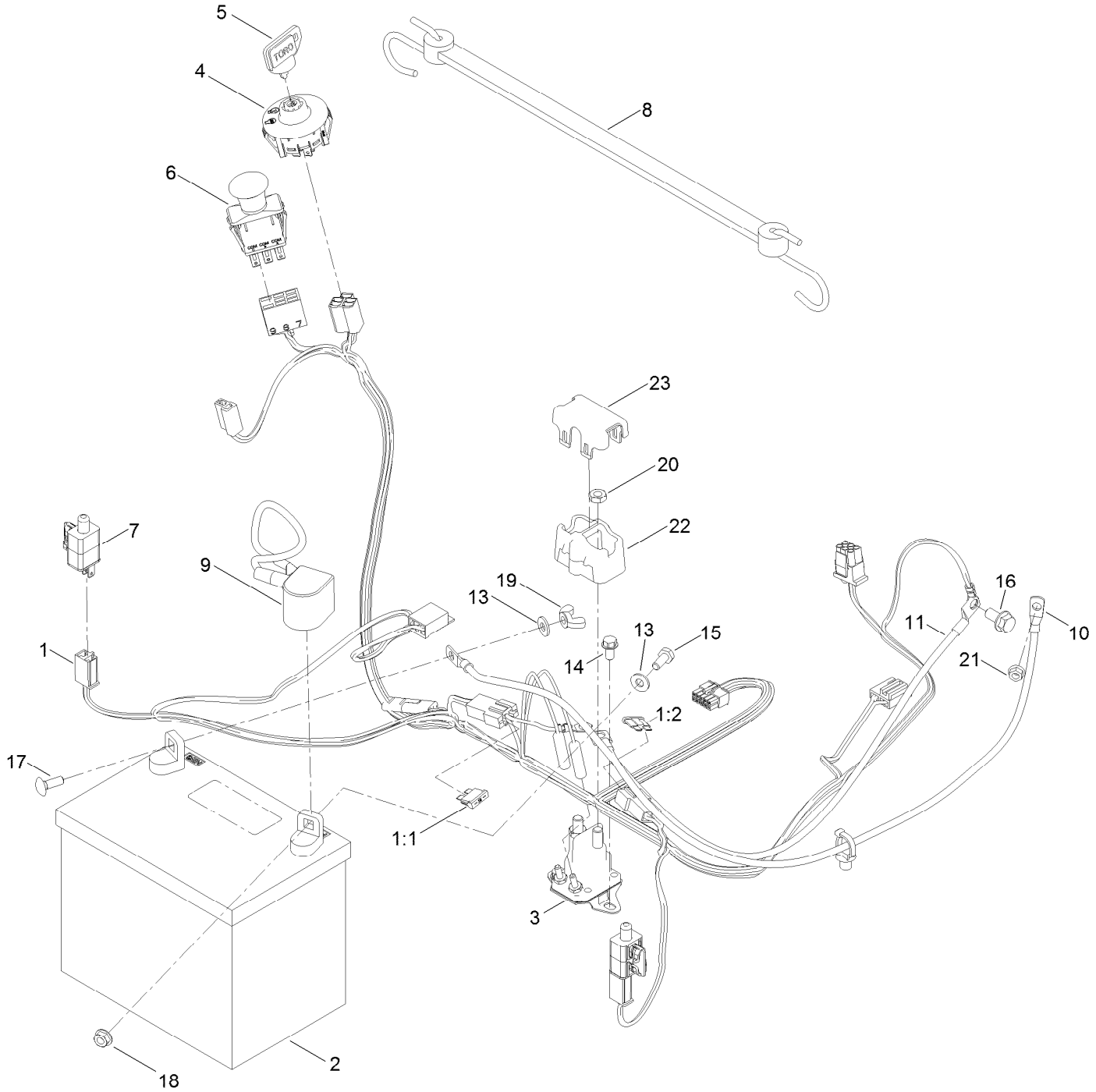

Electrical Assembly (continued)

Ref.	Part Number	Qty.	Description
1	138-2521	1	Harness-Wire
1:1	109355	1	Fuse-Blade, 15 Amp
1:2	109102	1	Fuse-Blade, 25 Amp
2	105-1692	1	Battery- Dry, 12V, 230 CCA
3	117-1197	1	Solenoid
4	137-4100	1	Switch-Ignition
5	63-8360	1	Key-Ignition
6	103-5221	1	Switch-PTO
7	110-6765	2	Switch
8	139-2381	1	Strap-Rubber
9	140-2713	1	Cable-Battery, Pos
10	139-2431	1	Cable-Battery, Red (8 Gauge)
11	110-6793	1	Cable-Battery, Black
13	120-9679	2	Washer-Flat
14	32144-4	2	Screw-HWH
15	137-3041	1	Screw-HH
16	139-2593	1	Screw-HHF
17	137-3053	1	Screw-CARR
18	139-2575	1	Nut-HF
19	32103-22	1	Nut-Wing
20	139-2580	2	Nut-HJ
21	139-2619	1	Nut-HF
22	140-2080	1	Cover-Solenoid
23	140-2081	1	Cap-Solenoid

42 Inch Deck and Decal Assembly

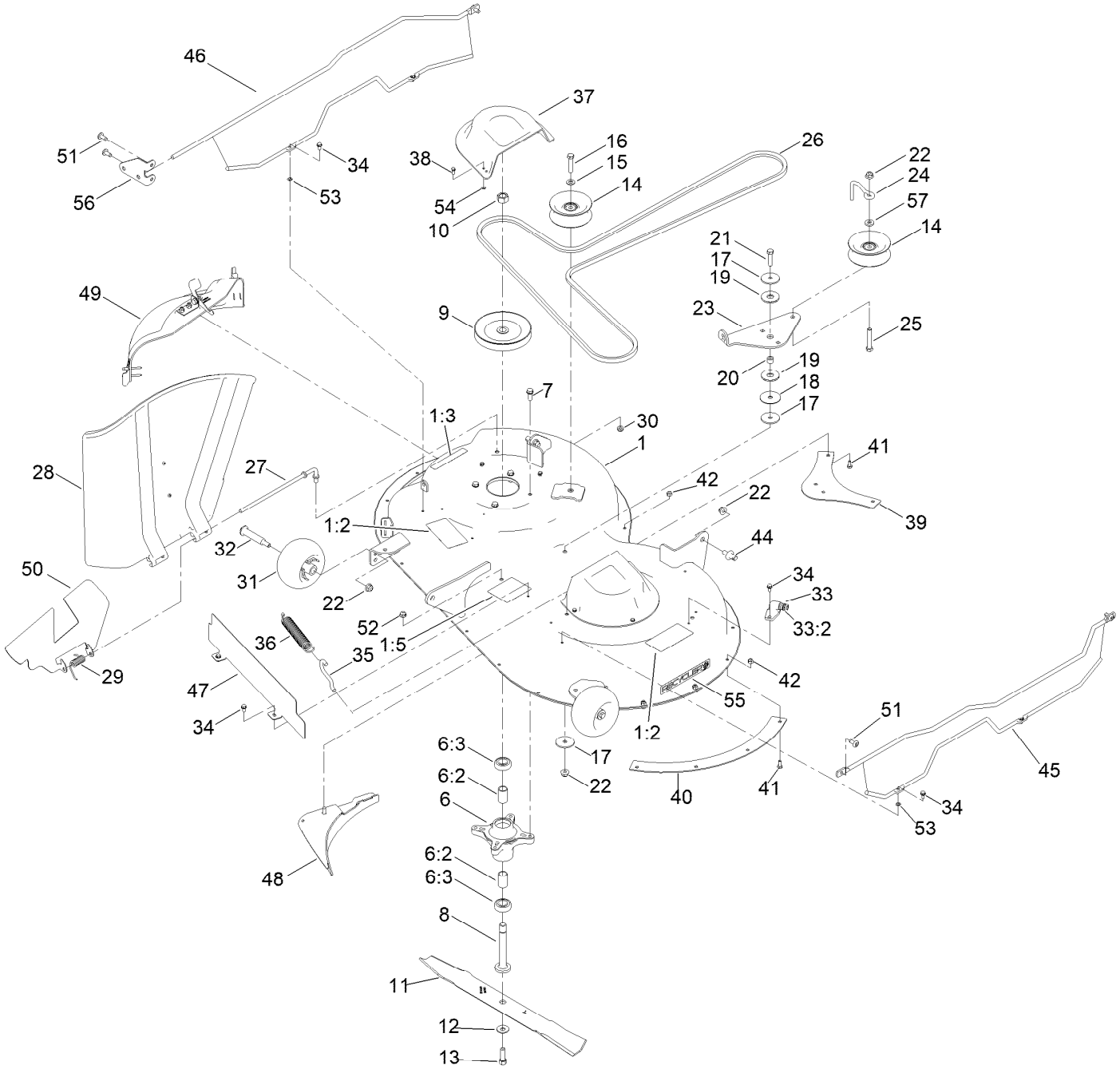

42 Inch Deck and Decal Assembly (continued)

Ref.	Part Number	Qty.	Description
1	138-9761	1	42 Inch Deck And Decal ASM
1:2	132-0872	2	Decal-Danger, Deck
1:3	93-7009	1	Decal-Danger
1:5	105-7015	1	Decal-Routing, Belt
6	139-3214	2	Spindle ASM
6:2	120-7935	2	Spacer
6:3	138-9770	2	Bearing-Ball
7	32144-41	8	Screw-Taptite
8	117-7268	2	Shaft-Spindle
9	139-2433	2	Pulley
10	139-2578	2	Nut-Hex
11	117-5376-03	2	Blade-Mulch
12	3290-465	2	Washer-Belleville
13	26-0671	2	Screw-HH
14	132-9420	2	Pulley-Idler, Flat
15	115-1166	1	Washer-Plain
16	138-0722	1	Screw-HH
17	139-1726	3	Washer-Rebound
18	120-2229	1	Washer
19	114-0463	2	Washer-Friction, Composite
20	115-4986	1	Spacer
21	137-3070	1	Screw-HH
22	119-4042	6	Nut-HF, NI
23	138-7262	1	Arm-Idler (Mty/Wdm)
24	138-7270	1	Guide-Belt, Idler
25	139-2589	1	Screw-HH
26	119-8819	1	V-Belt
27	137-2019	1	Rod-Pivot
28	137-7046	1	Deflector
29	138-7268	1	Spring-Torsion
30	121-4600	1	Nut-Hex
31	1-603299	2	Roller-Scalp, Anti
32	139-2551	2	Bolt-Shoulder
33	133-9289	1	Fitting-Washout
33:2	133-9290	1	O-Ring
34	32144-4	8	Screw-HWH
35	138-7267	1	Hook-Spring, Return
36	138-7265	1	Spring Extension
37	108-7889	2	Cover-Belt
38	139-1713	6	Screw-Thd Roll
39	137-2036-03	1	Baffle-Blowout, Rear
40	137-2037-03	1	Baffle-Blowout, Side
41	137-3041	8	Screw-HH
42	137-3088	8	Nut-Hex
44	139-5871	2	Pin-Deck
45	140-0368	1	Left Guard ASM
46	140-0369	1	Right Guard ASM
47	137-2039-03	1	Shield-Frount
48	137-7034-03	1	Baffle-Clipping
49	137-5034	1	42 Inch Mulch Plug ASM
50	138-2555-03	1	Deflector Insert
51	138-9753	5	Screw
52	119-4041	1	Nut-HF
53	1-803037	4	Nut-Retaining
54	132-0900	6	Nut-Retaining
55	119-2368	1	Decal-Recycler
56	140-5183-01	1	Plate-Mount, Guard
57	138-7207	1	Spacer-Hub, Blower

42 Inch Mulch Plug Assembly No. 137-5034

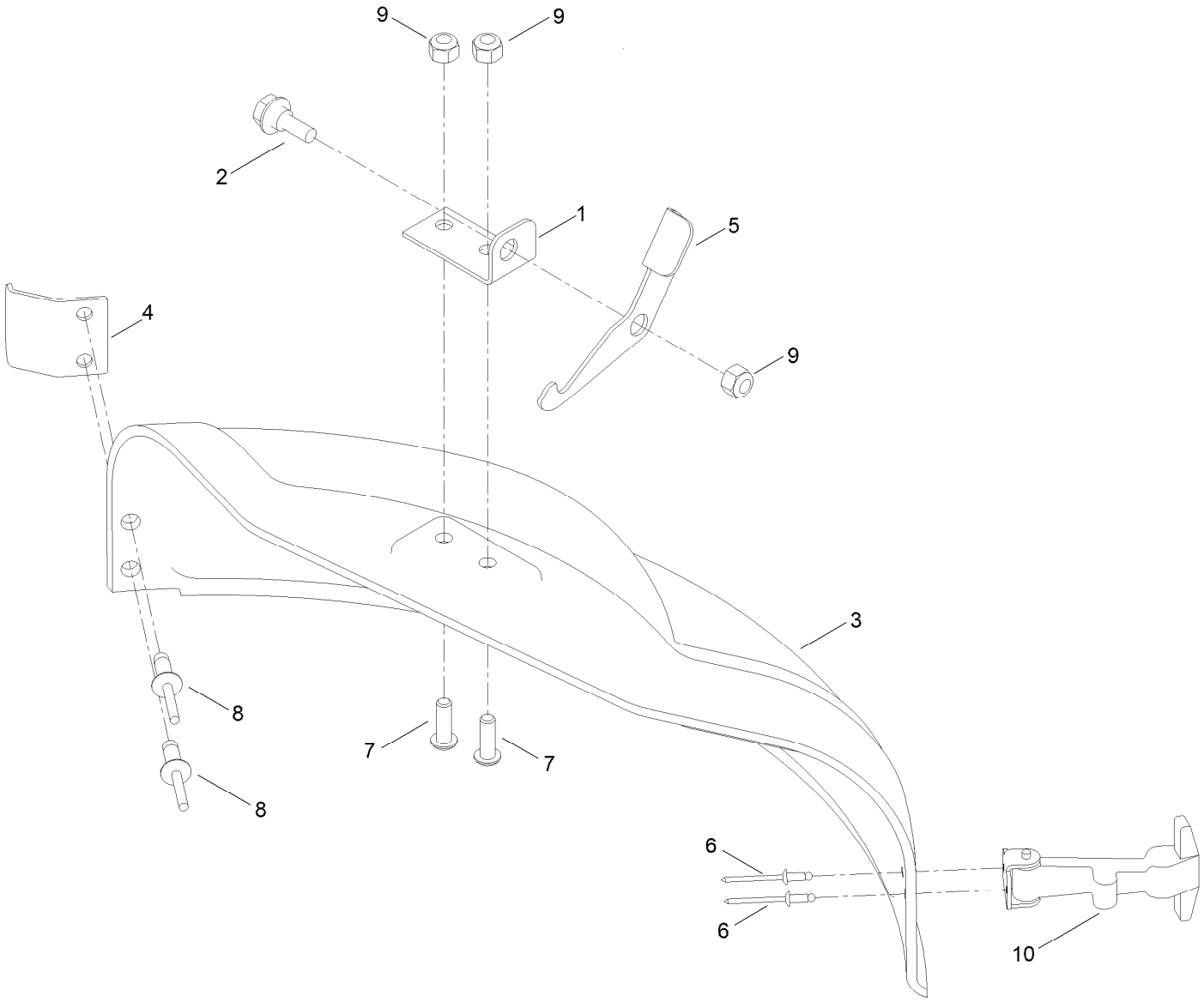

42 Inch Mulch Plug Assembly No. 137-5034 (continued)

Ref.	Part Number	Qty.	Description
1	138-7271	1	Plate-Pivot
2	139-1730	1	Screw-Shoulder, HHF
3	137-2009	1	Plug-Mulch, 42 Inch
4	137-2023	1	Bracket-Elbow
5	140-3497	1	Latch
6	3269-31	2	Rivet-Pop
7	3274-69	2	Screw-HSBH
8	3290-412	2	Rivet-Blind
9	137-3088	3	Nut-Hex
10	117344	1	Handle ASM

Decal Assembly

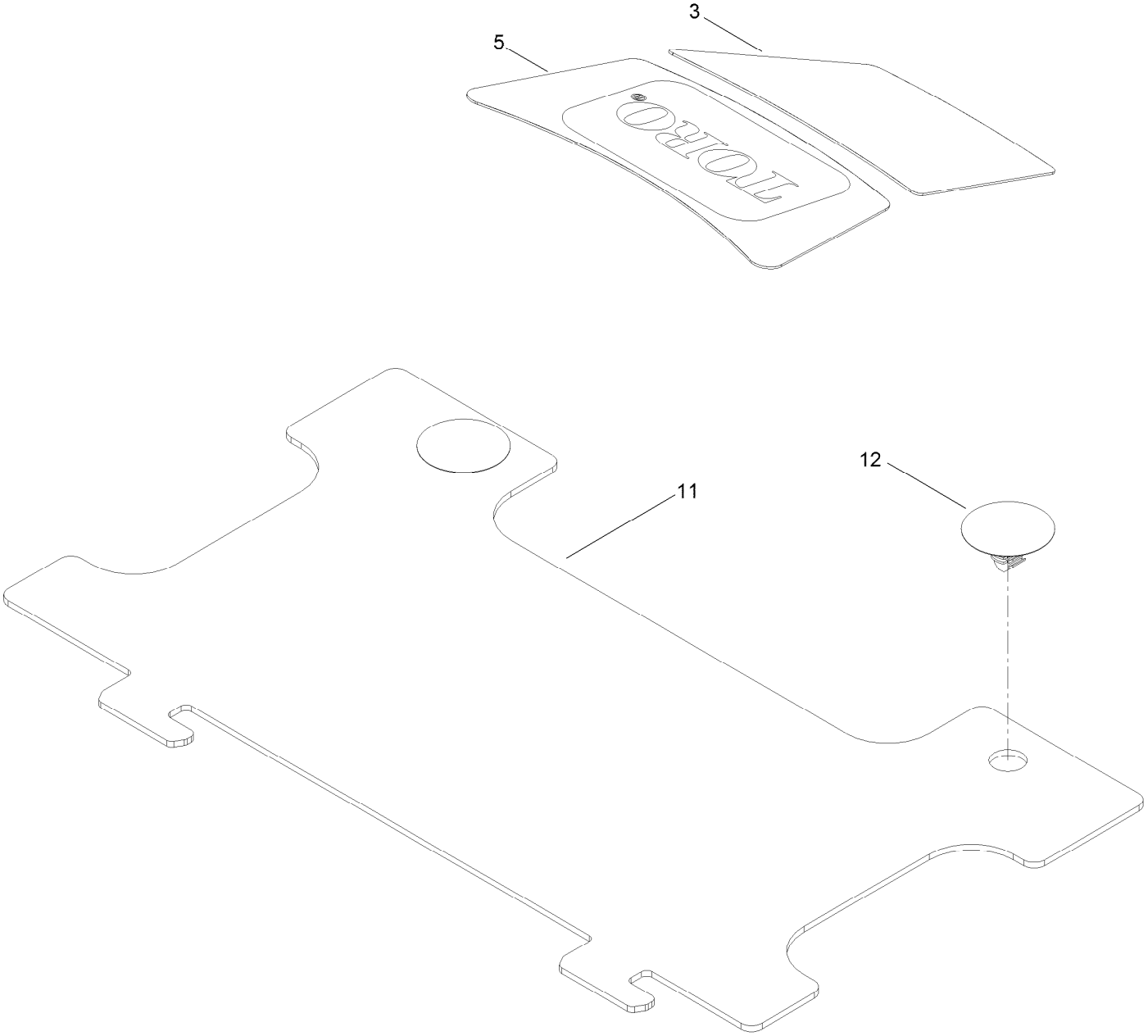

Decal Assembly (continued)

Ref.	Part Number	Qty.	Description
3	130-0682	1	Decal-Displacement, Engine
5	125-1700	1	Decal-Engine
11	140-0355	1	Shield
12	139-3205	2	Rivet-Pa66

Clutch Assembly

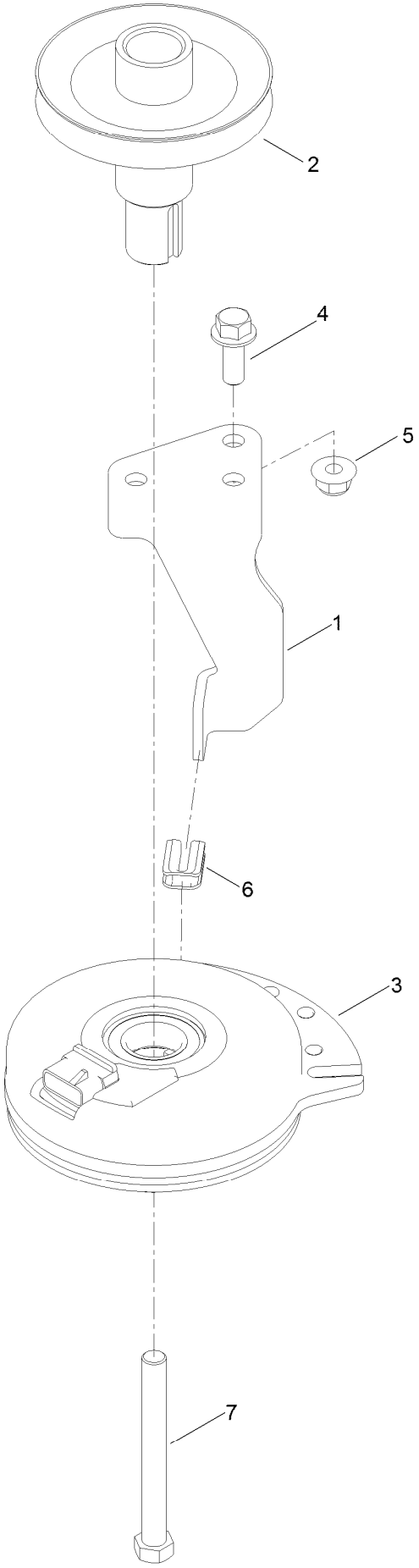

Clutch Assembly (continued)

Ref.	Part Number	Qty.	Description
1	138-7275	1	Stop-Clutch (Narrow)
2	138-9792	1	Pulley-Engine
3	117-7468	1	Clutch-Electric
4	139-2597	1	Screw-HHF
5	119-4042	1	Nut-HF, NI
6	120-2217	1	Isolator-Clutch
7	139-2571	1	Screw-HH

Attachments and Accessories

For 74685 — TimeCutter ZS 4200S Riding Mower

Product Name	Model/Part
Hourmeter Kit	116-5461
Seat Cover W/O Arm Rest - TC 18in	117-0096
Jack Kit	127-6666
Fuel Stabilizer .05 oz	130-2393
4-Cycle Fuel, Snow And Lawn 32oz Can	131-3823
Toro Premium Fuel Treatment 12oz Bottle	131-6572
Replacement Blade Kit	137-1999-03P
42in Recycler Kit	137-7042
Bagging Enhancement Kit	137-7048
Maintenance Kit	139-0650
Front Weight Kit	140-2050
Assist Bar Kit	140-2052
LED Light Kit	140-2056
Deluxe Seat Kit	140-2057
Armrest Kit	140-2058
Deck Footlift Assist Kit	140-2059
Floormat Kit	140-2060
Jack Mount Kit	140-2711
Striping Kit, 42in and Riding Mowers	140-5198
10W30 4-Cycle Engine Oil (32oz Bottle)	38280
Toro 4-Cycle SAE 30 Oil (32oz Bottle)	38903
Storage Cover	490-7516
Mower Deck Drive Belt, TimeCutter SS Riding Mower with 42-inch Mowing Deck	79004
Twin Bagger, Timecutter 42in Stamped	79410
ROPS Kit	79485
Slope Sensor Kit	79486

Notes:

Notes:

Notes:

TORO®

Count on it.