FORM NO. 3312-717

TORO®

MODEL NO. 38310-6000001 & UP
MODEL NO. 38305C-6900001 & UP

PARTS CATALOG

TORO POWER SHOVEL

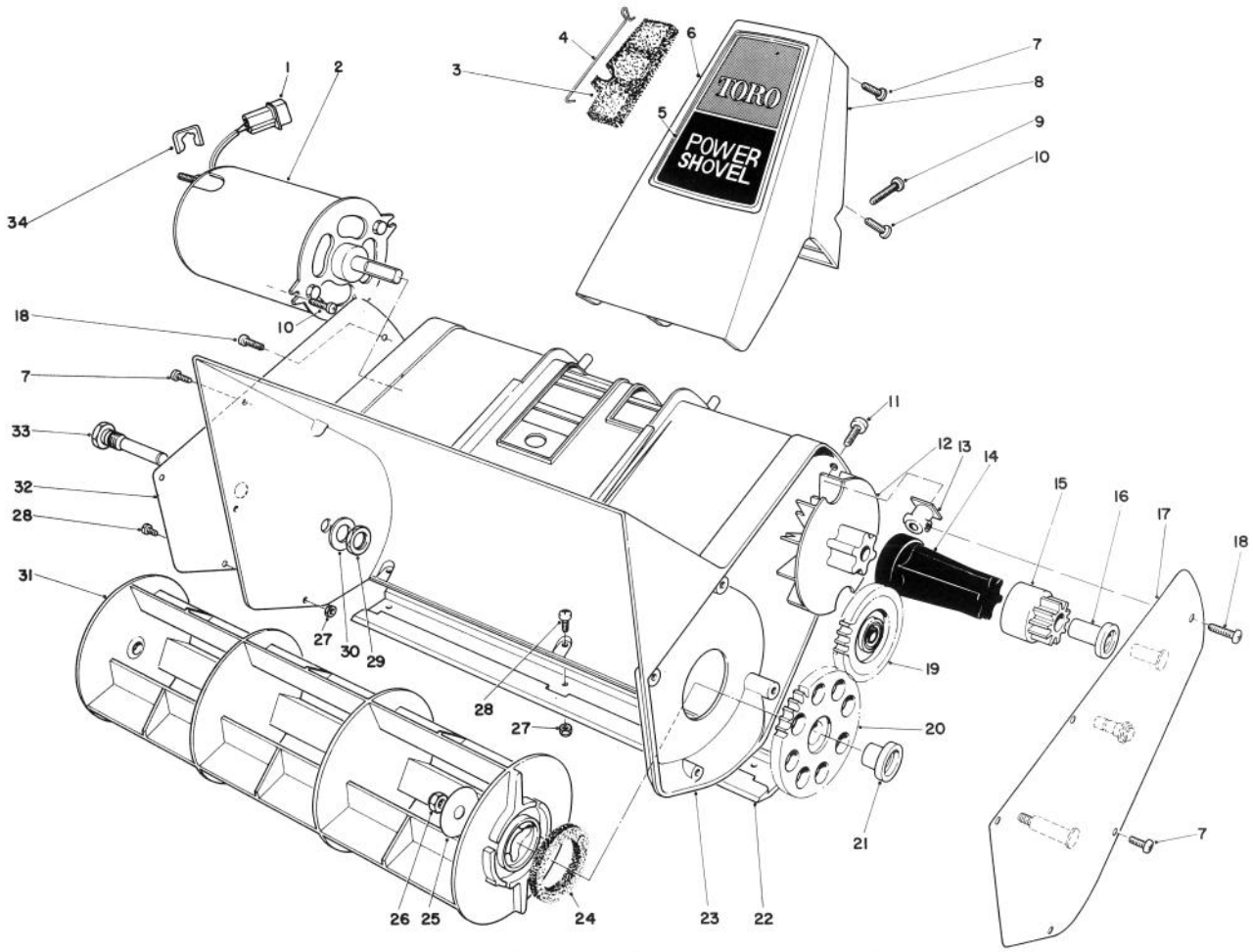

ROTOR HOUSING ASSEMBLY

Ref. No.	Part No.	Description	No. Used
1	218-551	Pin — Housing (Model #38310)	1
*	218-517	Pin — Housing (Model #38305C)	1
2	53-4400	Motor (Model #38310)	1
*	43-2590	Motor (Model #38305C)	1
3	42-0050	Filter — Foam	1
4	42-2910	Retain — Filter	1
5	41-9840	Decal — Handle Support	1
6	42-2850	Handle Support — Front	1
7	32104-118	Screw — Pan Hd.	9
8	42-2860	Handle Support — Back	1
9	3250-20	Screw — Pan Head	2
10	32144-36	Screw — Pan Head	4
11	32144-66	Screw — Phillips Truss	2
12	41-9820	Fan	1
13	53-9390	Block — Mounting	2
14	38-8570	Coupling — Drive	1
15	42-0240	Drive Gear (Incl. Ref. #16)	1
16	42-0010	Bushing — Gear Drive	1
17	53-9300	Gear Carrier	1

Ref. No.	Part No.	Description	No. Used
18	32104-121	Screw — Pan Head	2
19	56-6770	Idler Gear Assembly	1
20	42-0230	Rotor Gear Assembly (Incl. Ref. #21)	1
21	41-9890	Bushing — Rotor	1
22	41-9830	Scraper	1
23	53-9380	Housing (Model #38310)	1
*	53-9381	Housing (Model #38305C)	1
24	38-8580	Washer — Felt	1
25	42-0070	Washer — Rotor	1
26	3296-13	Locknut	1
27	3296-54	Locknut	5
28	3250-19	Screw — Pan Head	5
29	32152-8	Locknut	1
30	3256-24	Flat Washer	1
31	38-8170	Rotor	1
32	41-9960	Cover — Right Side	1
33	38-8210	Pin — Rotor	1
34	218-524	Strain Relief (Model #38305C)	1

*Not Illustrated

©The Toro Company — 1985

PRICE $1.00

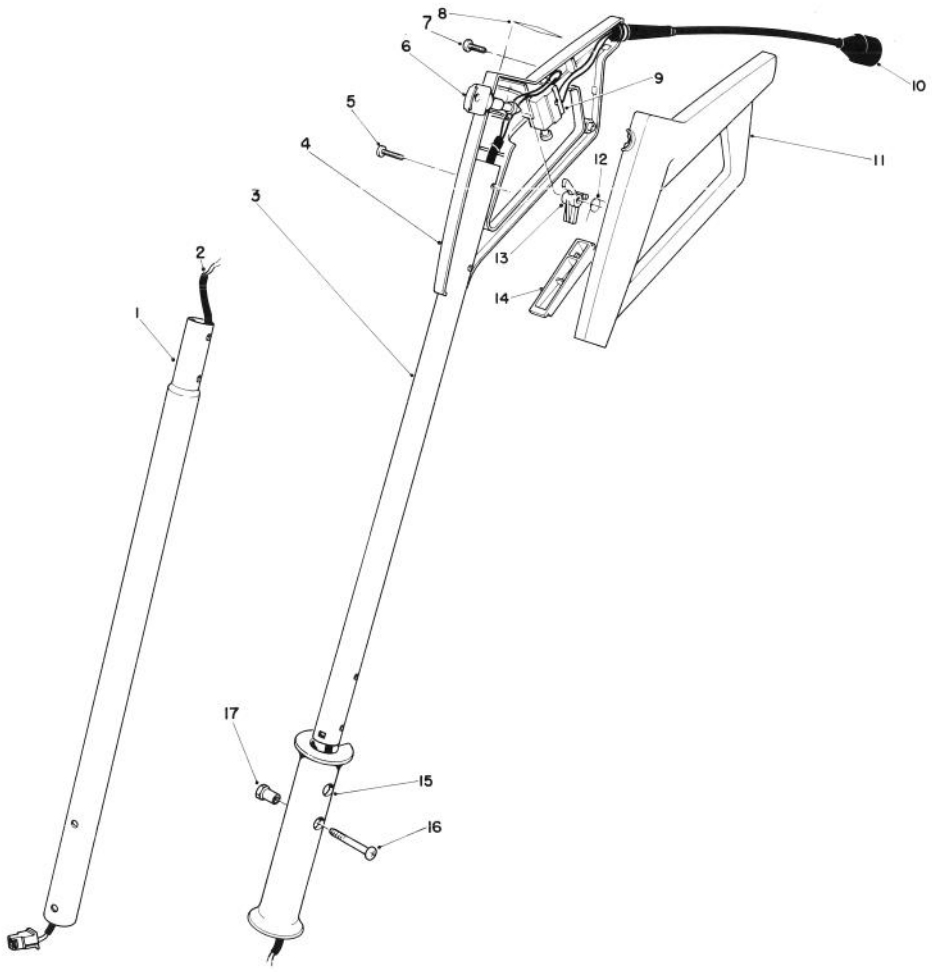

HANDLE ASSEMBLY

Ref. No.	Part No.	Description	No. Used
1	41-9850	Tube — Lower Handle	1
2	56-6050	Wire Harness (Model #38310)	1
*	42-0020	Wire Harness (Model #38305C)	1
3	41-9860	Tube — Upper Handle	1
4	42-2830	Grip — Control R.H.	1
5	32104-121	Screw — Pan Head	4
6	38-8310	Key	2
7	32104-118	Screw — Pan Head	1
8	38-8340	Decal — Control Grip (Model #38310)	1
*	42-2890	Decal — Control Grip (Model #38305C)	1

Ref. No.	Part No.	Description	No. Used
9	36-8340	Switch	1
10	42-0770	Cord — Supply	1
11	42-2840	Grip — Control L.H.	1
12	38-8330	Spring	1
13	41-9870	Lockout	1
14	42-2870	Switch Bar	1
15	41-9880	Grip — Handle	1
16	39-3720	Screw — Pan Head Special	2
17	39-3710	Nut — Hex Special	2

*Not Illustrated