FORM NO. 3312-733

TORO®

MODEL NO. 20526-6000001 & Up

PARTS CATALOG

21″ H.P. REAR BAGGER

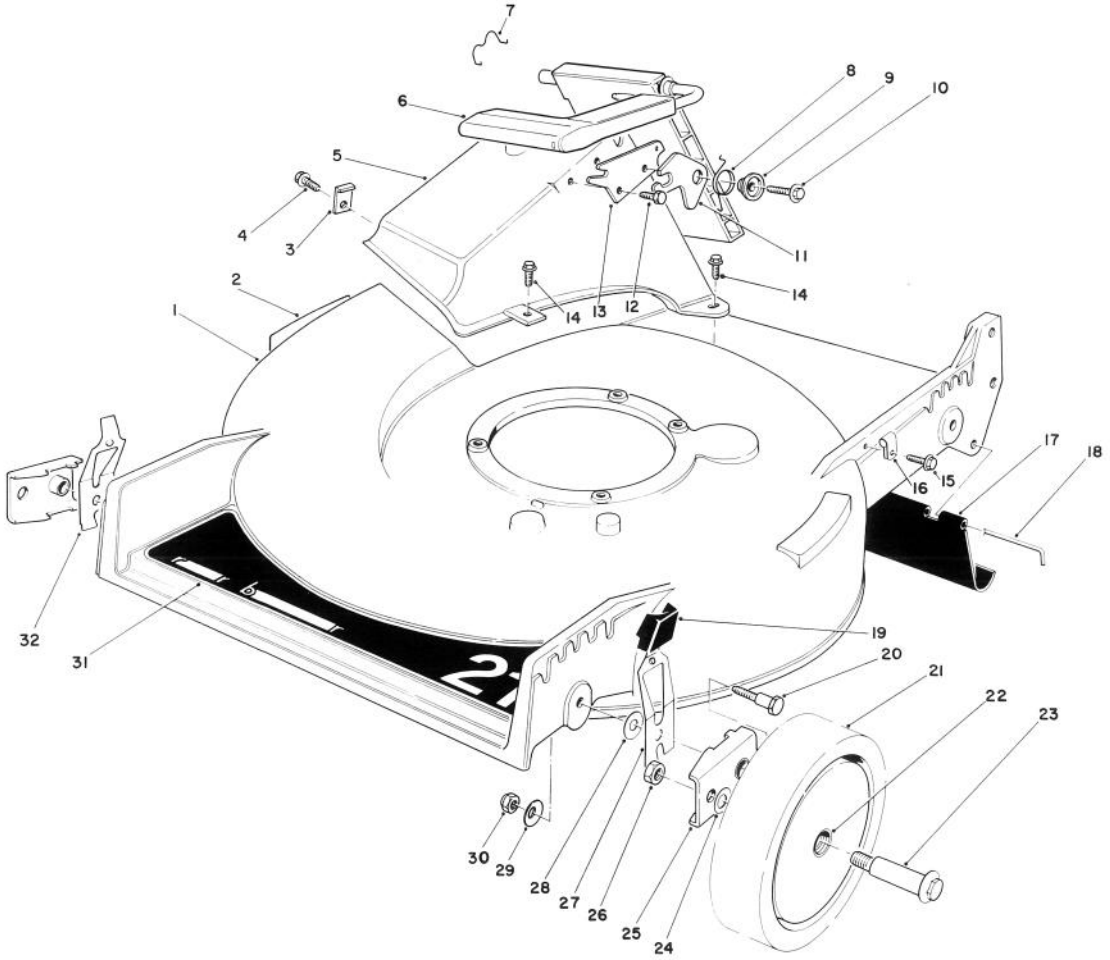

HOUSING ASSEMBLY

Ref. No.	Part No.	Description	No. Used
1	11-4069	Housing (Incl. Ref. #2)	1
2	39-5770	Decal — Danger	1
3	47-6540	Clip — Tunnel	1
4	12-3270	Screw — Thread Forming, Hex. Washer Hd.	1
5	46-3500	Tunnel — Discharge	1
6	51-0200	Discharge Door Assembly	1
7	47-5840	Retainer — Door	1
8	33-4860	Spring — Torsion	1
9	43-4840	Spacer — Door Latch	1
10	46-8091	Screw — Self Tapping	1
11	42-4010	Latch — Door	1
12	46-8090	Screw — Self Tapping	1
13	23-1040	Plate — Latch	1
14	46-6811	Capscrew — Hex. Hd.	3
15	12-5450	Screw — Self Tapping	1
16	2412-83	Clamp	1

Ref. No.	Part No.	Description	No. Used
17	44-0580	Rear Shield	1
18	33-3208	Rod — Shield	1
19	25-7740	Knob — Arm	4
20	44-5270	Screw — Pivot	4
21	11-9509	Wheel & Tire Assembly (Inc. Ref. #22)	4
22	27-6250	Bushing	8
23	27-6230	Wheel Bolt	4
24	40-1940	Washer — Wheel Bolt	4
25	47-2940	Pivot Arm Assembly	4
26	52-3620	Locknut	4
27	52-7480	Spring Arm Assembly L.H.	2
28	5-4460	Washer — Pivot	4
29	3290-456	Washer — Belleville	4
30	3296-29	Locknut	4
31	44-0450	Decal — Rear Bagger	1
32	52-7490	Spring Arm Assembly R.H.	2

©The Toro Company — 1985

PRICE $1.00

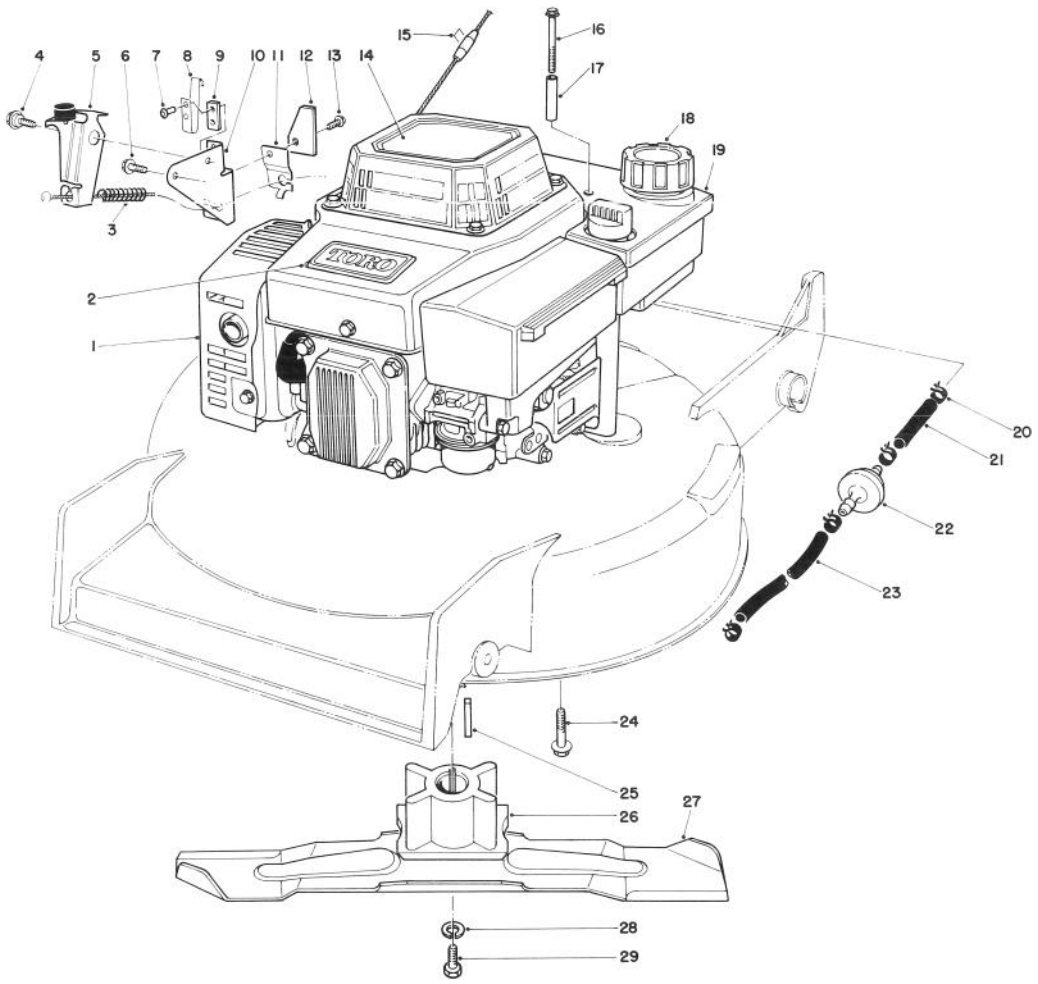

ENGINE ASSEMBLY

Ref. No.	Part No.	Description	No. Used
1	81-3040	Engine	1
2	46-8290	Plate — Logo, Toro	1
3	56-6370	Spring — Compression	1
4	56-6190	Screw — Shoulder, Metric	1
5	53-4770	Brake Plate Assembly	1
6	46-0790	Screw — Self Tapping	1
7	3290-459	Rivet	2
8	53-4680	Strap — Ground	1
9	53-4670	Strap — Insulation	1
10	53-4620	Plate — Mounting	1
11	53-4610	Clamp — Cable	1
12	53-4690	Stop — Ground Strap	1
13	12-5450	Screw — Self Tapping	1
14	56-6290	Decal — Recoil	1
15	3290-443	Staple	1
16	56-6610	Screw — Thread Forming, Hex. Washer Hd.	2

Ref. No.	Part No.	Description	No. Used
17	57-3830	Spacer — Tabular	2
18	55-3570	Gas Cap Assembly	1
19	55-3530	Fuel Tank Assembly	1
20	2412-95	Clamp — Fuel Line	4
21	51-3211	Fuel Line	1
22	56-6360	Filter — Fuel	1
23	51-3214	Fuel Line	1
24	11-0590	Screw — Thread Forming	4
25	7-0036	Key — Square	1
26	46-7810	Retainer — Blade	1
27	42-1000	Blade	1
28	3253-22	Washer — Lock	1
29	26-0670	Screw — Blade	1
*	56-6680	Tube — Oil Drain	1

* Not Illustrated

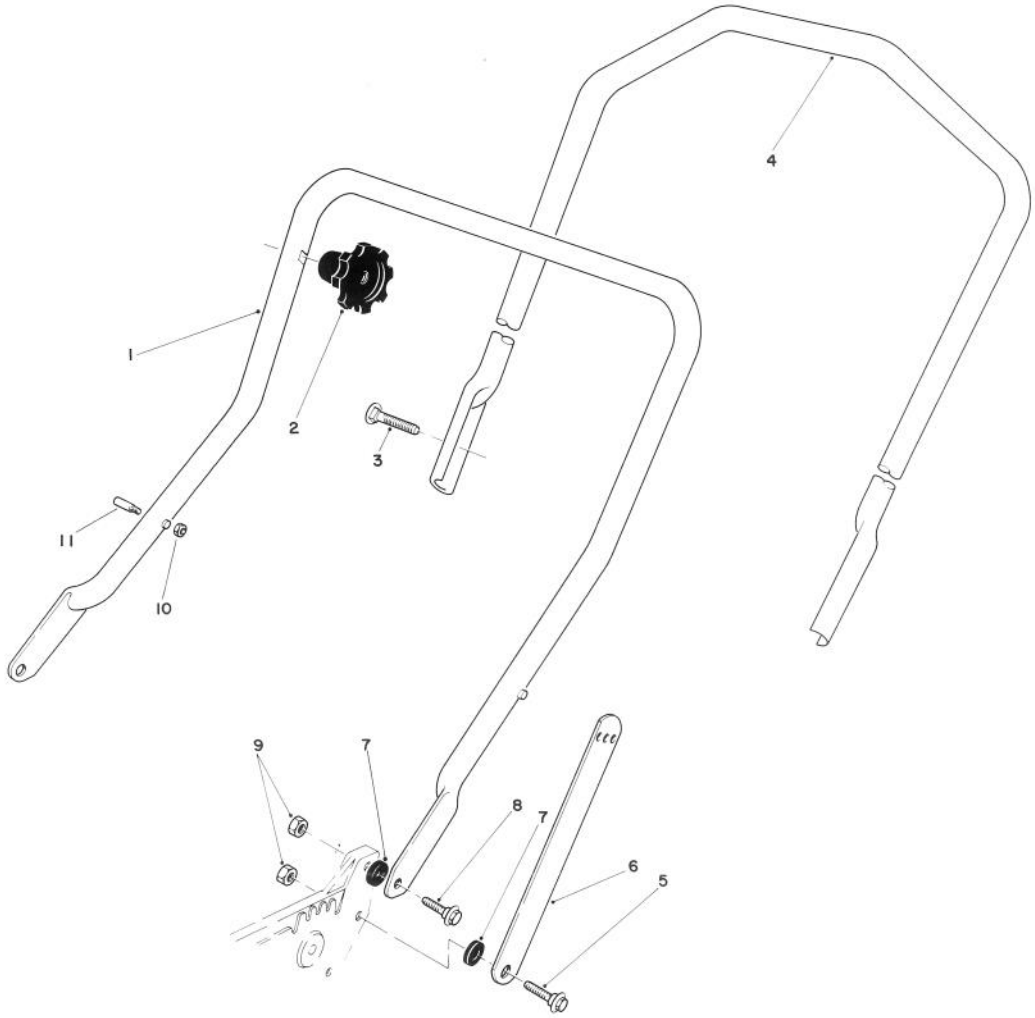

HANDLE ASSEMBLY

Ref. No.	Part No.	Description	No. Used
1	43-1361	Lower Handle Assembly	1
2	19-4050	Knob — Handle Release	2
3	17-9421	Handle Screw	2
4	46-5411	Upper Handle	1
5	27-7210	Shoulder Screw	2
6	43-1370	Handle Latch	2

Ref. No.	Part No.	Description	No. Used
7	3-3287	Spacer — Handle Latch	4
8	27-7211	Shoulder Screw	2
9	3296-29	Nut — Lock	4
10†	3296-47	Nut — Lock	2
11†	49-2750	Pin — Handle	2

† Service Replacement Parts

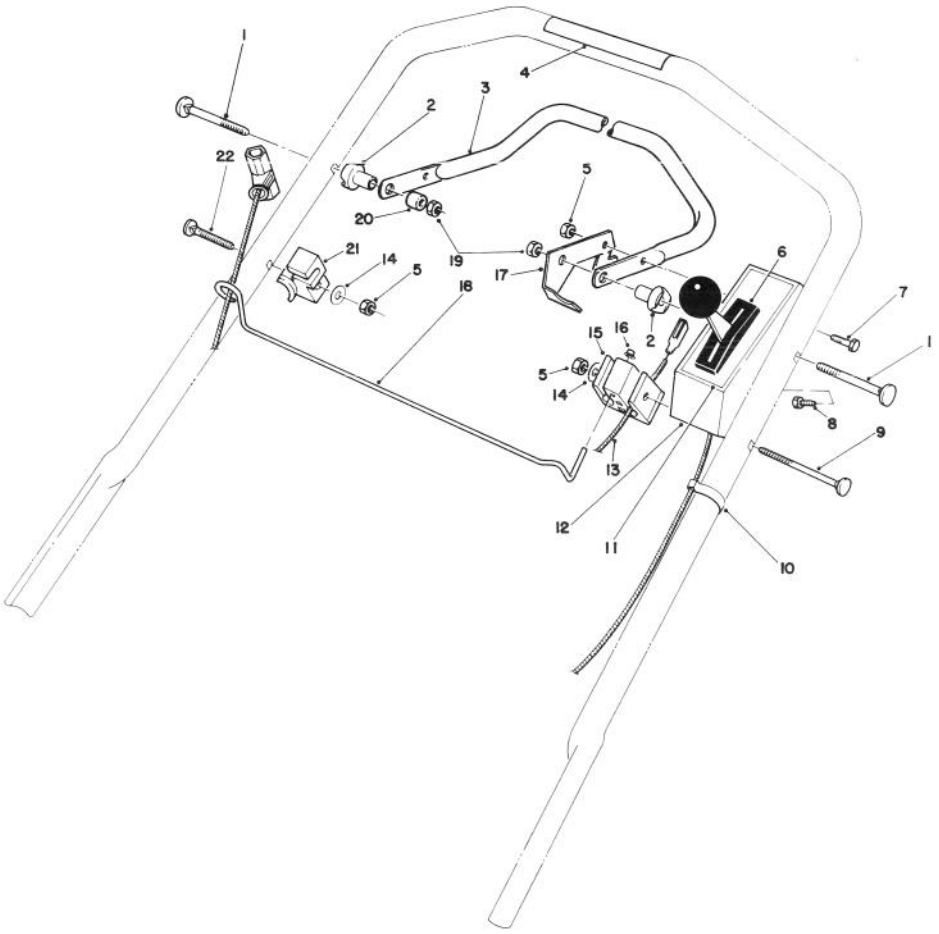

CONTROL ASSEMBLY

Ref. No.	Part No.	Description	No. Used
1	17-9421	Screw — Handle	2
2	49-1630	Support — Spacer	2
3	52-7430	Control Bar	1
4	49-1770	Decal — Warning	1
5	3296-42	Nut — Lock	3
6	46-6000	Throttle — Control Sheath Lg. 49-1/2" Wire Lg. 2-3/8"	1
7	321-3	Screw — Hex. Hd.	1
8	32104-76	Screw — Self Tapping	2
9	46-6434	Screw — Handle	1
10	218-465	Clip — Conduit	2

Ref. No.	Part No.	Description	No. Used
11	49-7790	Decal — Control Panel	1
12	49-1650	Control Cover	1
13	56-6094	Cable — Brake	1
14	3256-22	Washer	2
15	46-6980	Support Cable	1
16	3290-337	Nut — Push	1
17	46-7950	Lever — Control	1
18	46-7970	Rod — Rope	1
19	3296-58	Nut — Flange	2
20	256-276	Spacer — Nylon	1
21	46-7960	Catch — Rod	1
22	46-6430	Screw — Handle	1

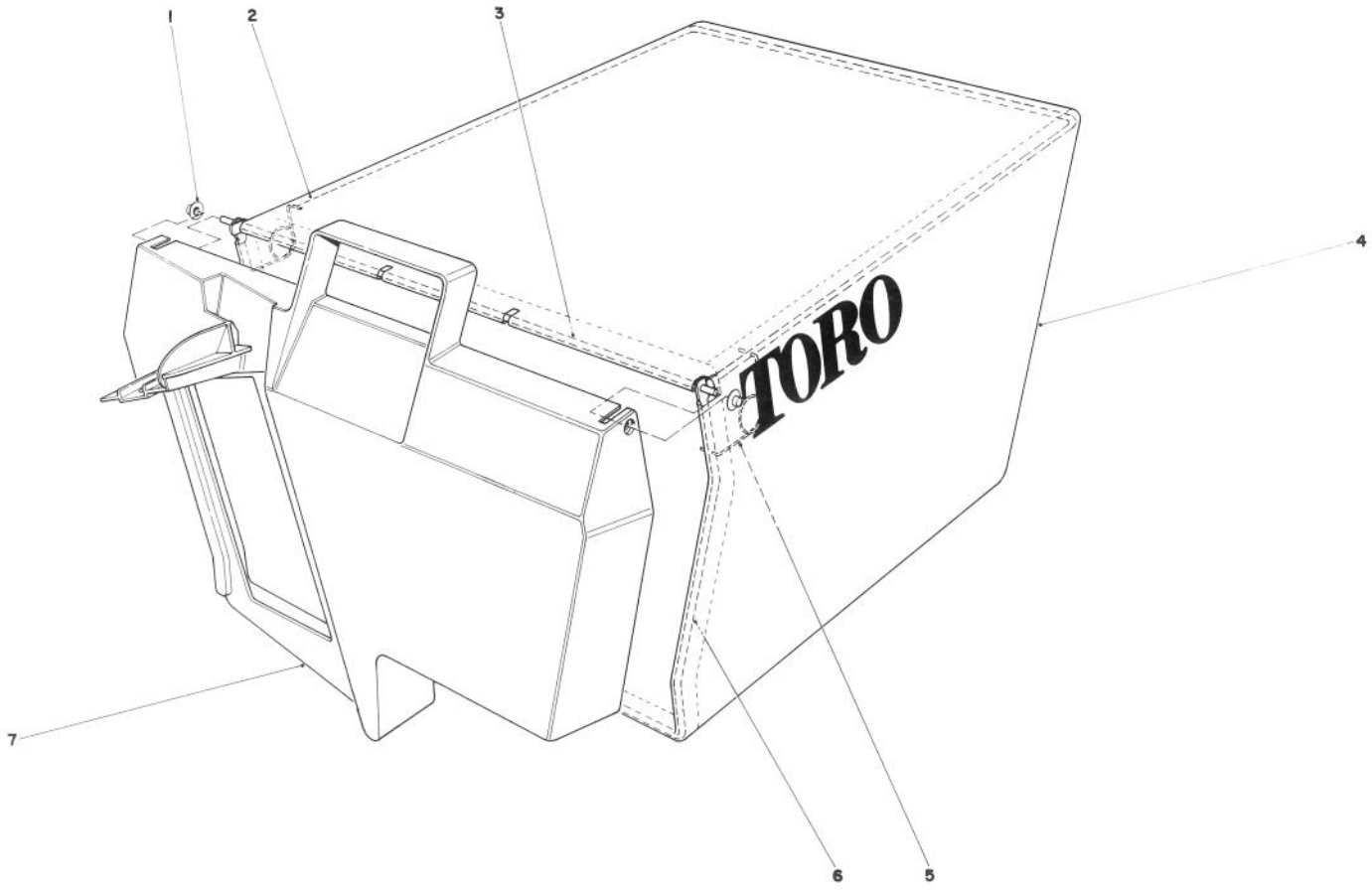

GRASS BAG ASSEMBLY NO. 11-0159

Ref. No.	Part No.	Description	No. Used
1	3290-422	Push Nut	2
2	42-4030	Bag Frame Upper	1
3	33-4820	Hinge Bag Door	1
4	8-2759	Grass Bag	1

Ref. No.	Part No.	Description	No. Used
5	36-6910	Spring	2
6	43-0030	Frame Bag	1
7	36-1331	Door Grass Bag	1

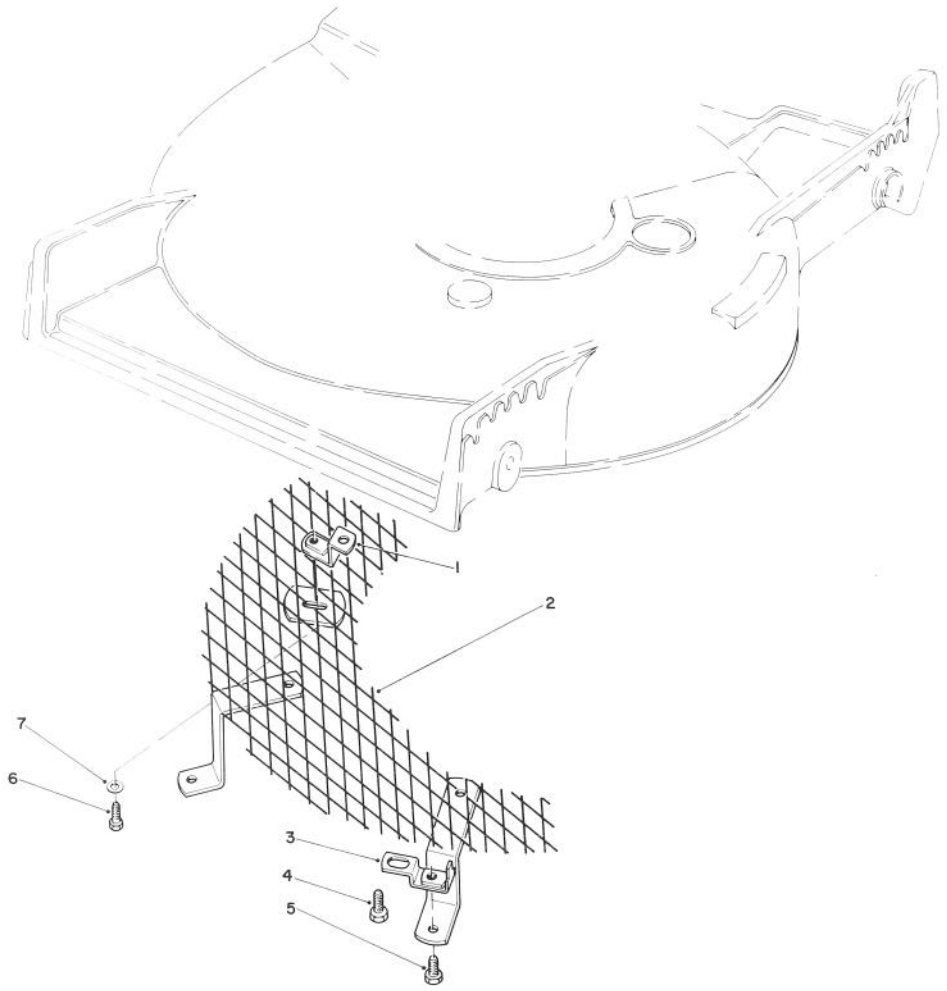

LEAF SHREDDER KIT MODEL NO. 59157 (Optional)

Ref. No.	Part No.	Description	No. Used
1	47-6260	Bracket	1
2	47-6230	Screen	1
3	46-4880	Mounting Bracket	2
4	32144-11	Screw — Self Tapping	3

Ref. No.	Part No.	Description	No. Used
5	321-3	Capscrew — Hex Hd.	2
6	321-5	Capscrew — Hex Hd.	1
7	3256-1	Washer	1

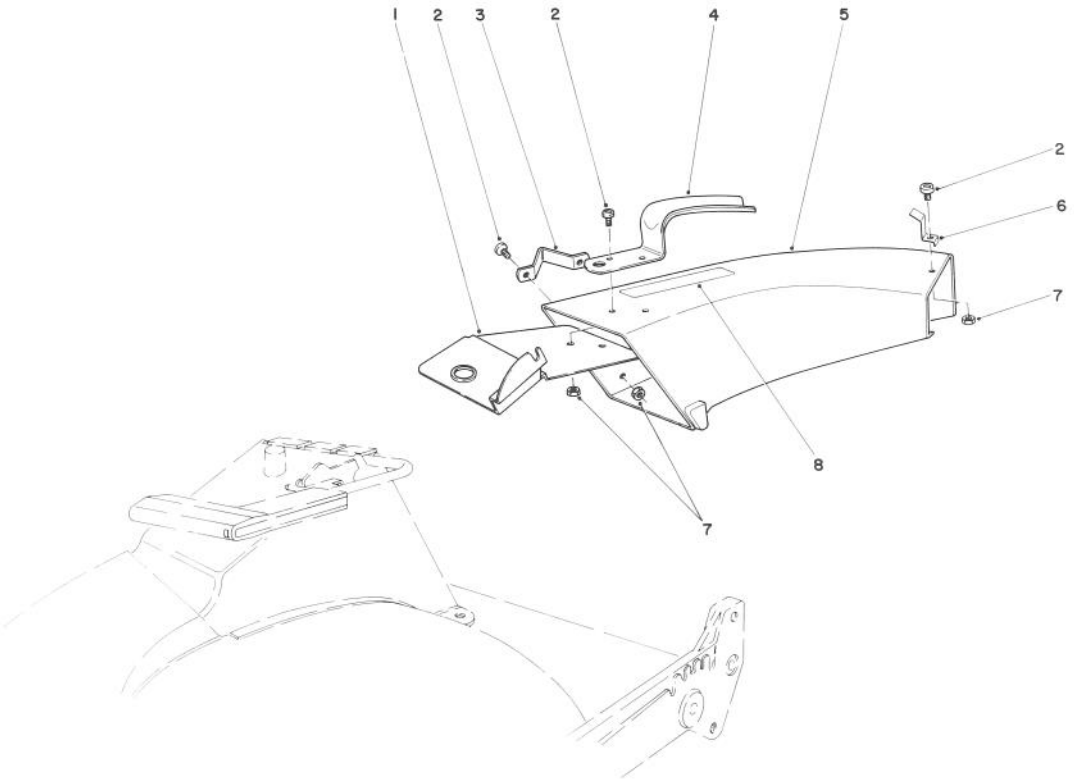

SIDE DISCHARGE CHUTE MODEL NO. 59108 (Optional)

Ref. No.	Part No.	Description	No. Used
1	44-2330	Plate — Discharge Chute	1
2	3251-3	Screw	5
3	46-6580	Bracket — Side	1
4	42-1340	Handle — Grass Chute	1
5	11-7149	Chute — Discharge (Incl. Ref. #8)	1

Ref. No.	Part No.	Description	No. Used
6	49-2630	Clip — Cable Stop	1
7	3296-12	Locknut	5
8	39-9120	Decal — Caution	1

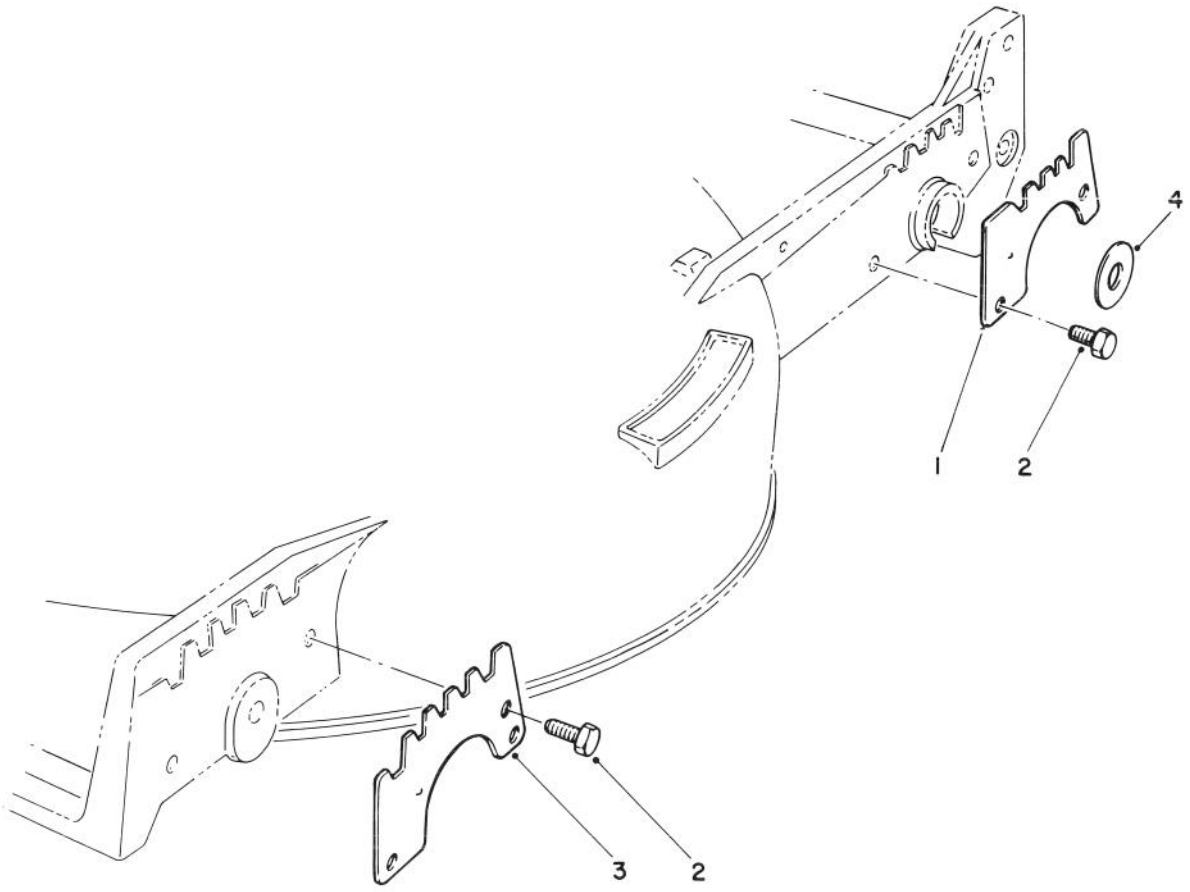

WEAR PLATE KIT NO. 49-4080 (Optional)

Ref. No.	Part No.	Description	No. Used
1	49-4070	Plate — Wear, Rear	2
2	32104-17	Screw — Thread Forming	8

Ref. No.	Part No.	Description	No. Used
3	43-5050	Plate — Wear, Front	2
4	33-0390	Washer	2

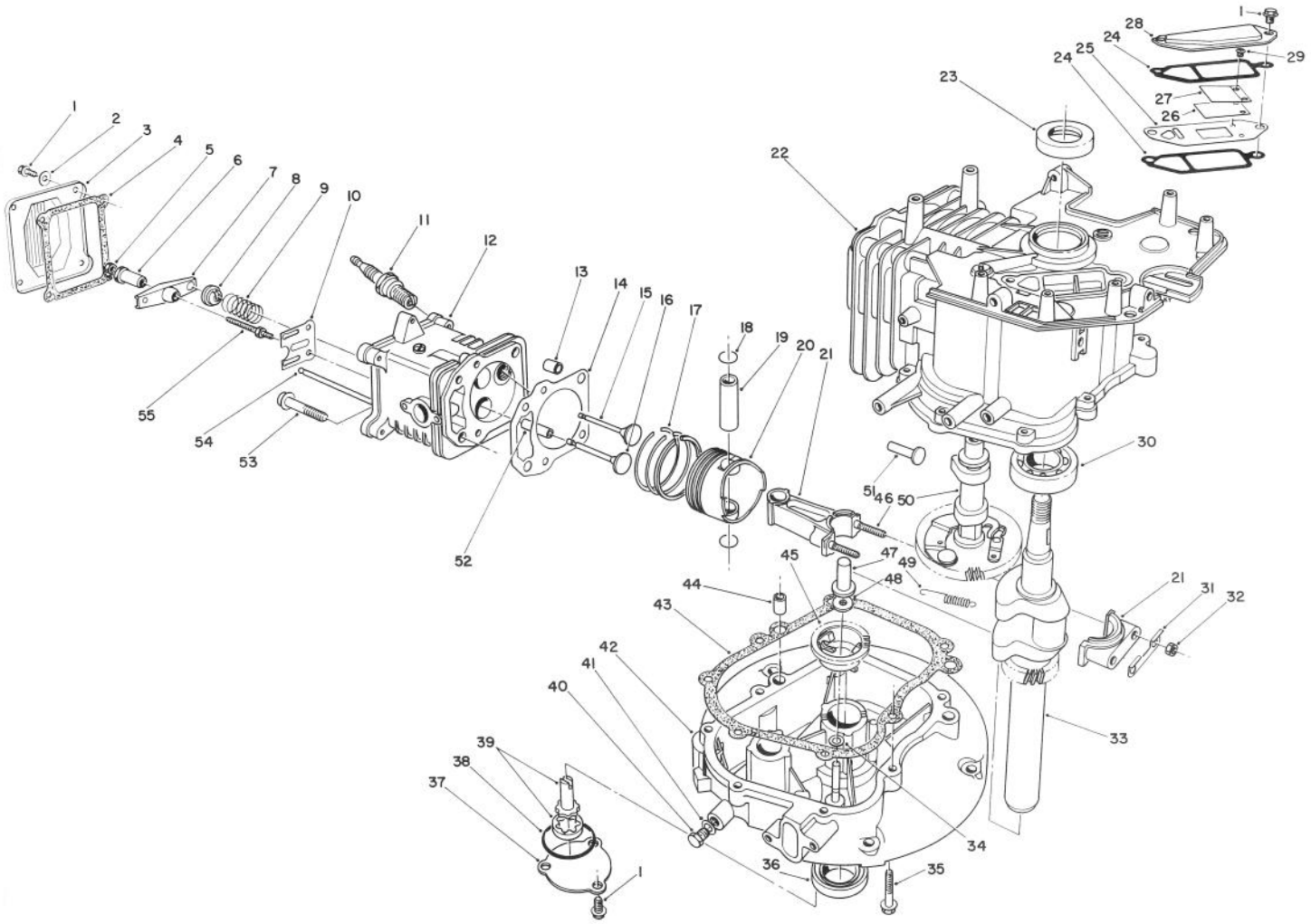

ENGINE ASSEMBLY

Ref. No.	Part No.	Description	No. Used
1	81-1170	Bolt — Self Tapping	9
2	81-3790	Flat Washer	4
3	81-3780	Cover — Rocker Arm	1
4	81-3770	Gasket — Rocker Arm Cover	1
5	81-3760	Jam Nut	2
6	81-3750	Pivot — Rocker Arm	2
7	81-3740	Arm — Rocker	2
8	81-3730	Retainer — Valve Spring	2
9	81-3720	Spring — Valve	2
10	81-3710	Guide — Push Rod	1
11	81-3250	Spark Plug NGK BPR6ES	1
12	81-3700	Head — Cylinder (Incl. Ref. #52)	1
*	81-3840	Cylinder Head Assembly (Incl. Ref. #1-10, 12, 15, 16 & 52-55)	1
13	81-3690	Pin — Dowel	2
14	81-3680	Gasket — Cylinder Head	1
*	81-3820	Gasket Set	A/R
15	81-3670	Valve — Intake	1
16	81-3660	Valve — Exhaust	1
17	81-3650	Ring Set	1

Ref. No.	Part No.	Description	No. Used
18	50-0960	Circlip	2
19	81-3630	Pin — Piston	1
20	81-3620	Piston	1
21	81-3390	Connection Rod Assembly (Incl. Ref. #31, 32, & 46)	1
22	81-3280	Block — Engine (Incl. Ref. #23, & 30)	1
23	81-3290	Seal — Upper Crankshaft	1
24	81-3300	Gasket — Breather	2
25		Plate — Breather	1
26		Valve — Reed	1
*	81-3370	Reed Valve Assembly (Incl. Ref. #25-27, & 29)	1
27		Retainer — Reed Valve	1
28	81-3320	Cover — Breather	1
29		Screw — Reed Valve	2
30	81-3380	Ball Bearing	1
31	81-3400	Plate — Lock	1
32	50-0510	Nut	2
33	81-3420	Crankshaft	1
34	81-3440	Washer	1
35	81-3450	Bolt	7

* Not Illustrated

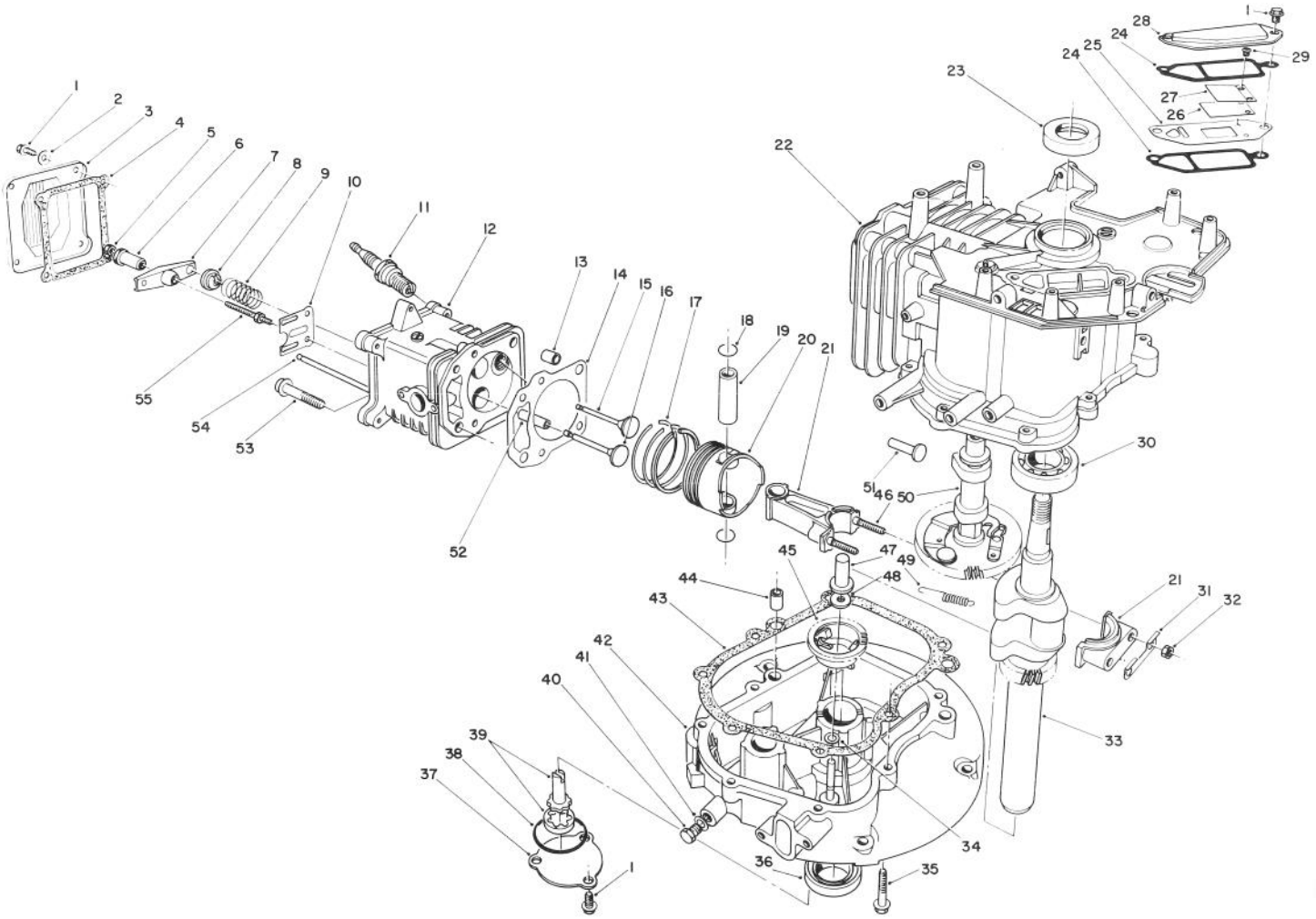

ENGINE ASSEMBLY (Continued)

Ref. No.	Part No.	Description	No. Used
36	81-3460	Seal — Lower Crankshaft	1
37	81-3470	Cover — Oil Pump	1
38	81-3480	O-Ring	1
39	81-3490	Oil Pump Assembly	1
40	81-3500	Plug — Oil Drain	1
41	81-3510	Gasket — Drain Plug	1
42	81-3520	Crankcase — Lower	1
43	81-3530	Gasket — Crankcase	1
44	50-0450	Pin — Dowel	2
45	81-3550	Governor Flyweight Assembly	1
46	81-3610	Stud — Connection Rod	2

Ref. No.	Part No.	Description	No. Used
47	81-3560	Plunger — Governor	1
48	81-3570	Washer	1
49	81-3580	Spring — Compression Release	1
50	81-3590	Camshaft Assembly (Incl. Ref. #49)	1
51	81-3600	Tappet	2
52	81-3830	Guide — Valve	2
53	50-0190	Bolt — Cylinder Head	4
54	81-3810	Rod — Push	2
55	81-3800	Stud — Rocker Arm	2
*	12-2599	Short Block Assembly	1

* Not Illustrated

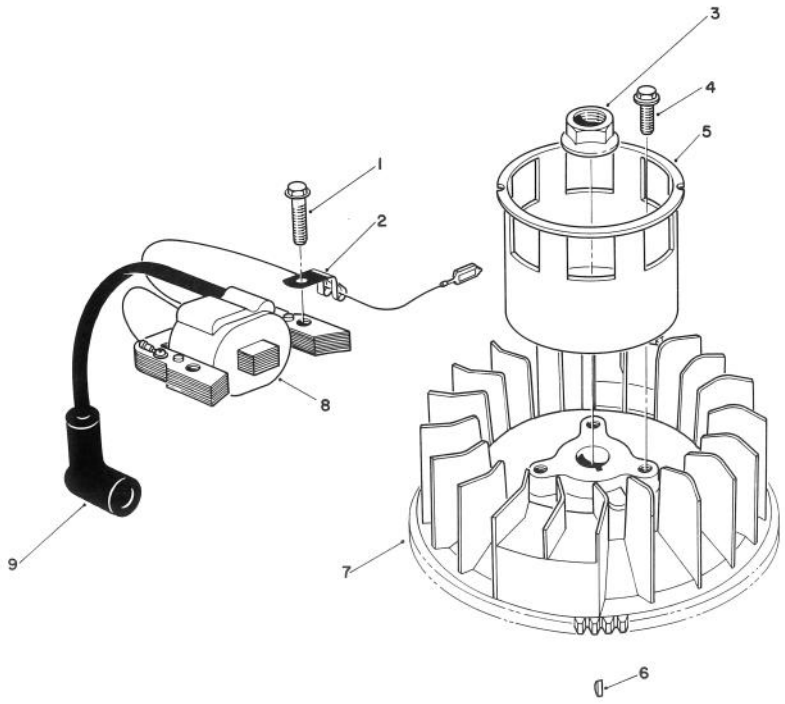

MAGNETO & FLYWHEEL ASSEMBLY

Ref. No.	Part No.	Description	No. Used
1	53-0860	Bolt	2
2	81-1480	Clamp	1
3	81-3890	Nut	1
4	81-1300	Bolt	3
5	81-3910	Cup — Starter	1

Ref. No.	Part No.	Description	No. Used
6	81-3930	Key — Flywheel	1
7	81-3920	Flywheel	1
8	81-3850	Coil Assembly — Magneto	1
9	81-3860	Cover — Spark Plug	1

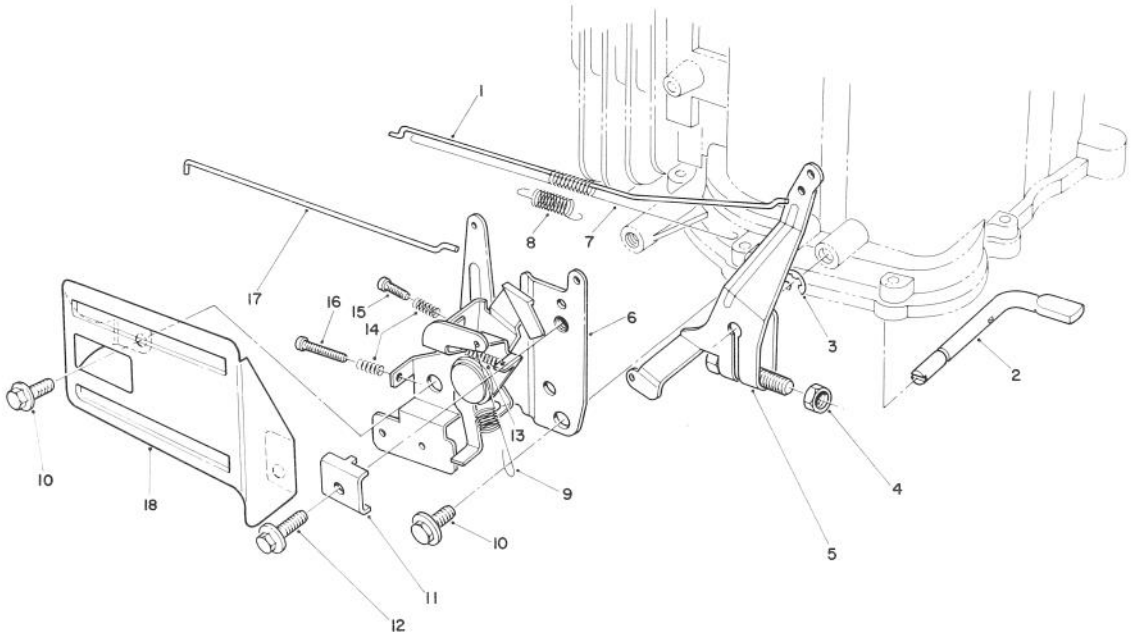

GOVERNOR ASSEMBLY

Ref. No.	Part No.	Description	No. Used
1	81-4450	Rod — Carburetor	1
2	81-4480	Shaft — Governor	1
3	81-4540	E-Ring	1
4	81-4490	Nut	1
5	81-4500	Governor Arm Assembly	1
6	81-4510	Throttle & Choke Control	1
7	81-4470	Spring — Carburetor Rod	1
8	81-4460	Spring — Choke Lever	1
9	81-4520	Spring — Governor	1

Ref. No.	Part No.	Description	No. Used
10	81-1170	Bolt	2
11	81-1690	Clamp — Cable	1
12	50-0130	Bolt	1
13	81-4570	Spring	1
14	81-2900	Spring	2
15	81-4550	Screw	1
16	81-4560	Screw	1
17	81-4440	Rod — Choke	1
18	57-5750	Guard — Throttle Linkage	1

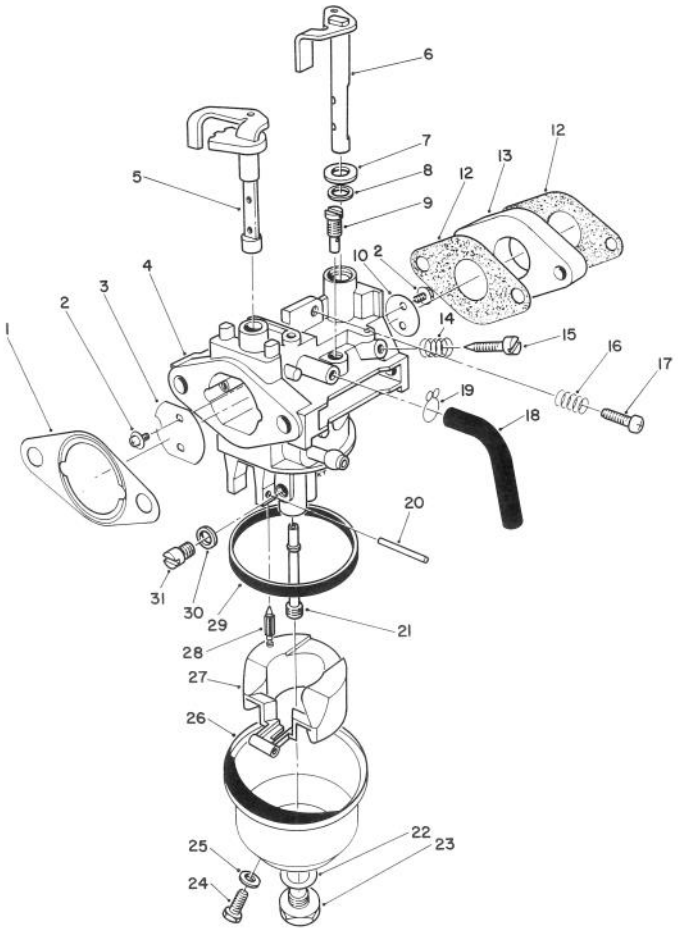

CARBURETOR ASSEMBLY

Ref. No.	Part No.	Description	No. Used
1	81-4250	Gasket — Air Cleaner	1
2	81-2710	Screw	4
3	81-2720	Valve — Choke	1
4		Body — Carburetor	1
5	81-4270	Shaft — Choke Valve	1
6	81-2920	Shaft — Throttle Valve	1
7	81-4280	Washer	1
8	81-4290	Seal — Throttle Shaft	1
9	81-1030	Jet — Pilot (#40)	1
10	81-2940	Valve — Throttle	1
12	81-2570	Gasket — Carburetor	2
13	81-0460	Block — Insulator	1
14	81-2580	Spring — Pilot Screw	1
15	50-2360	Screw — Pilot	1
16	81-4320	Spring — Idle Stop	1
17	50-0250	Screw — Idle Stop	1
18	81-4310	Tube — Bowl Vent	1
19	81-4300	Clamp	1

Ref. No.	Part No.	Description	No. Used
20	81-0980	Pin — Hinge	1
21	81-4330	Nozzle — Main	1
22	81-2650	Gasket — Bowl Screw	1
23	81-2660	Screw — Bowl	1
24	81-2670	Screw — Drain	1
25	81-2680	Gasket — Drain Screw	1
26	81-4340	Bowl — Float	1
27	81-2620	Float	1
28	81-2690	Needle	1
29	81-2630	Gasket — Float Bowl	1
30	81-4350	Spacer	1
31	50-4760	Main Jet (#82.5)	1
*	81-1040	Main Jet (#80 High Alt.)	A/R
*	81-4360	Carburetor Kit (Incl. Ref. #1, 12, 22, 25, 28, & 29)	A/R
*	81-4370	Carburetor Assembly (Incl. Ref. #2-31)	1

* Not Illustrated

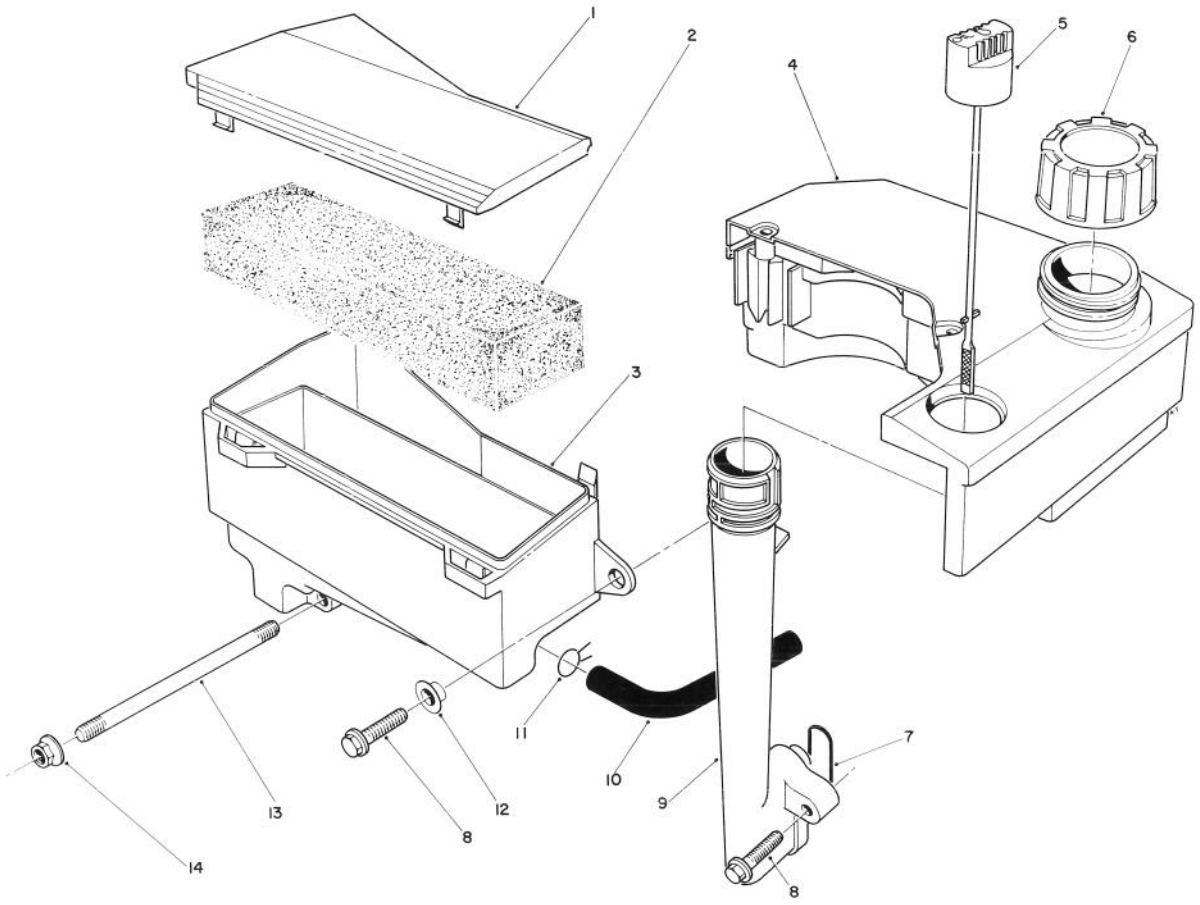

AIR CLEANER & FUEL TANK ASSEMBLY

Ref. No.	Part No.	Description	No. Used
1	81-4110	Cover — Air Cleaner	1
2	81-4120	Filter — Foam	1
3		Body — Air Cleaner	1
4	55-3530	Fuel Tank	1
5	81-4140	Dipstick — Oil	1
6	55-3570	Gas Cap	1
7	81-4150	O-Ring — Oil Tube	1
8	81-4160	Bolt	3

Ref. No.	Part No.	Description	No. Used
9	81-4170	Tube — Oil Fill	1
10	81-4180	Hose — Crankcase Breather	1
11	81-4190	Clamp	1
12	81-4200	Spacer	1
13	81-4220	Stud — Carburetor	2
14	50-7180	Nut	2
*	81-4240	Air Cleaner Assembly (Incl. Ref. #1 & 3)	1

* Not Illustrated

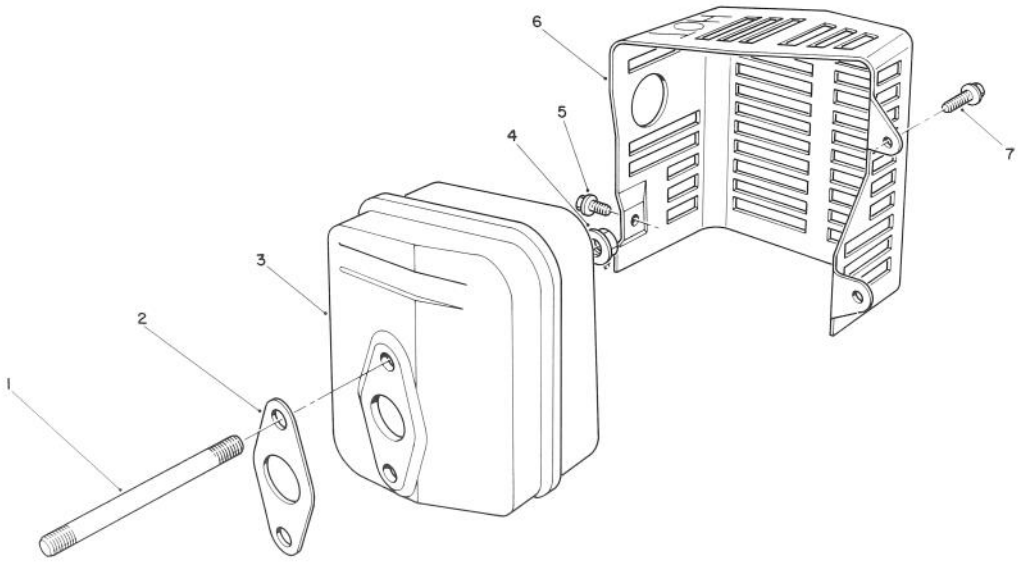

MUFFLER ASSEMBLY

Ref. No.	Part No.	Description	No. Used
1	81-4380	Stud — Muffler	2
2	81-4390	Gasket — Muffler	1
3	81-4400	Muffler	1
4	50-0530	Nut	2

Ref. No.	Part No.	Description	No. Used
5	81-4420	Screw	1
6	81-4430	Cover — Muffler	1
7	81-1170	Bolt	2

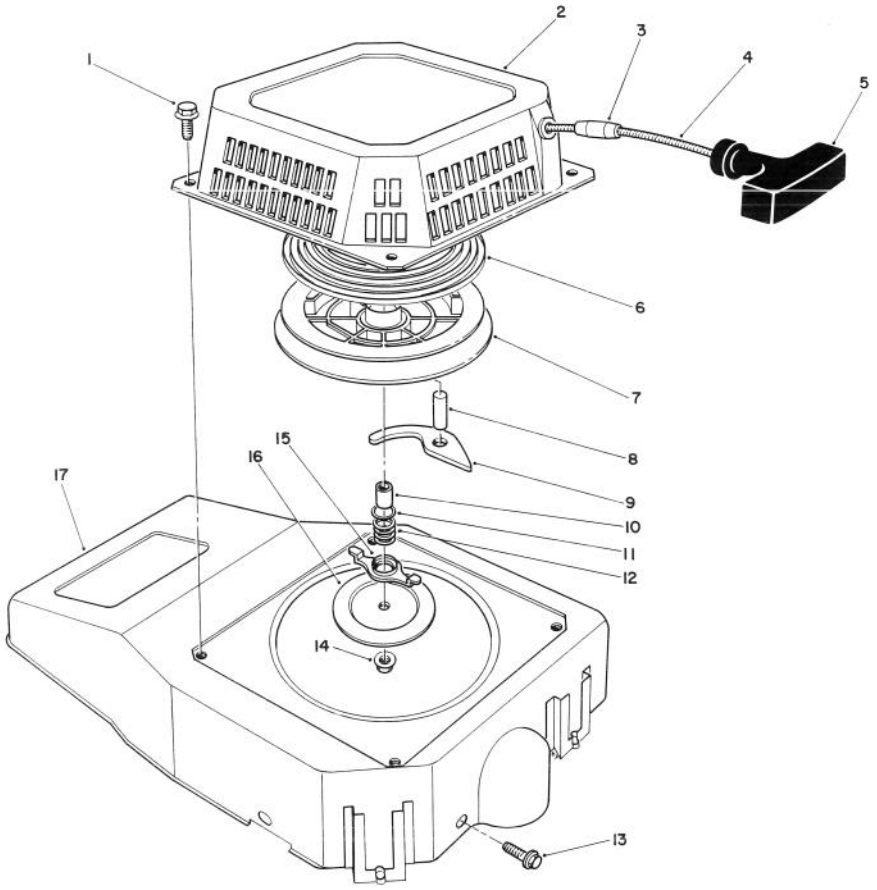

RECOIL ASSEMBLY

Ref. No.	Part No.	Description	No. Used
1	81-1280	Bolt	4
2	81-3970	Case — Recoil	1
3	81-3980	Stop — Rope	1
4	81-3990	Rope — Recoil	1
5	81-4000	Handle Assembly	1
6	81-4010	Spring — Recoil	1
7	81-4020	Reel — Rope Pulley	1
8	81-4030	Pin	1
9	81-4040	Pawl	1
10	81-4050	Spacer	1

Ref. No.	Part No.	Description	No. Used
11	81-4060	Washer	1
12	81-4070	Spring — Friction	1
13	81-1170	Bolt — Self Tapping	3
14	81-4100	Locknut	1
15	81-4080	Guide — Pawl	1
16	81-4090	Plate — Friction	1
17	81-3960	Shroud — Blower	1
*	81-3260	Recoil Starter Assembly (Incl. Ref. #2-12, & 14-16)	1

* Not Illustrated