Form No. 3473-369 Rev B

TORO®

Count on it.

Parts Catalog

Flex-Force Power System™ 60V MAX 43cm

Lawn Mower

Model No. 21844T—Serial No. 326000000 and Up

Register at www.Toro.com.
Original Instructions (EN)

CE

3473-369 B

Ordering Replacement Parts

To order replacement parts, please supply the part number, the quantity, and the description of each part desired.

Understanding Reference Numbers

Each identified part in an illustration has a reference number. The reference number for a part also appears in the parts list, along with other information about the part.

This catalog uses two special reference number formats, one to indicate parts in a service assembly and another to indicate the quantity of a given part in an illustration.

Service Assembly Reference Numbers

Parts in service assemblies have reference numbers in the form a:b. The a represents the reference number of the entire service assembly and the b represents a sequential number unique to each part within the service assembly.

For example, a wheel assembly might be identified by reference number 6, the tire by 6:1, the valve by 6:2, and the wheel by 6:3. When you order the assembly identified by reference number 6, you receive all parts identified by reference numbers 6:1,6:2, and 6:3. However, you may also order any part individually. Reference numbers of this type appear in illustration and in parts lists.

Reference Numbers Indicating Quantity

In an illustration, if a reference number indicates more than one part, the reference number has the form nX y. The n represents the quantity of the part, the X is the multiplication symbol, and the y represents the reference number.

For example, in an illustration, the reference number 2X 37 means that two of the parts identified by reference number 37 are indicated.

Contents

Frame Assembly 4
Battery Interface Assembly No. 134-4105 6
Grass Box Assembly No. 134-6362 8
Motor and Blade Assembly 10
Traction and Height-of-Cut Assembly 12
Handlebar and Control Assembly 14
Attachments and Accessories 16

© 2026—The Toro® Company
8111 Lyndale Avenue South
Bloomington, MN 55420

Contact us at www.Toro.com.
Printed in the USA.
All Rights Reserved

Frame Assembly

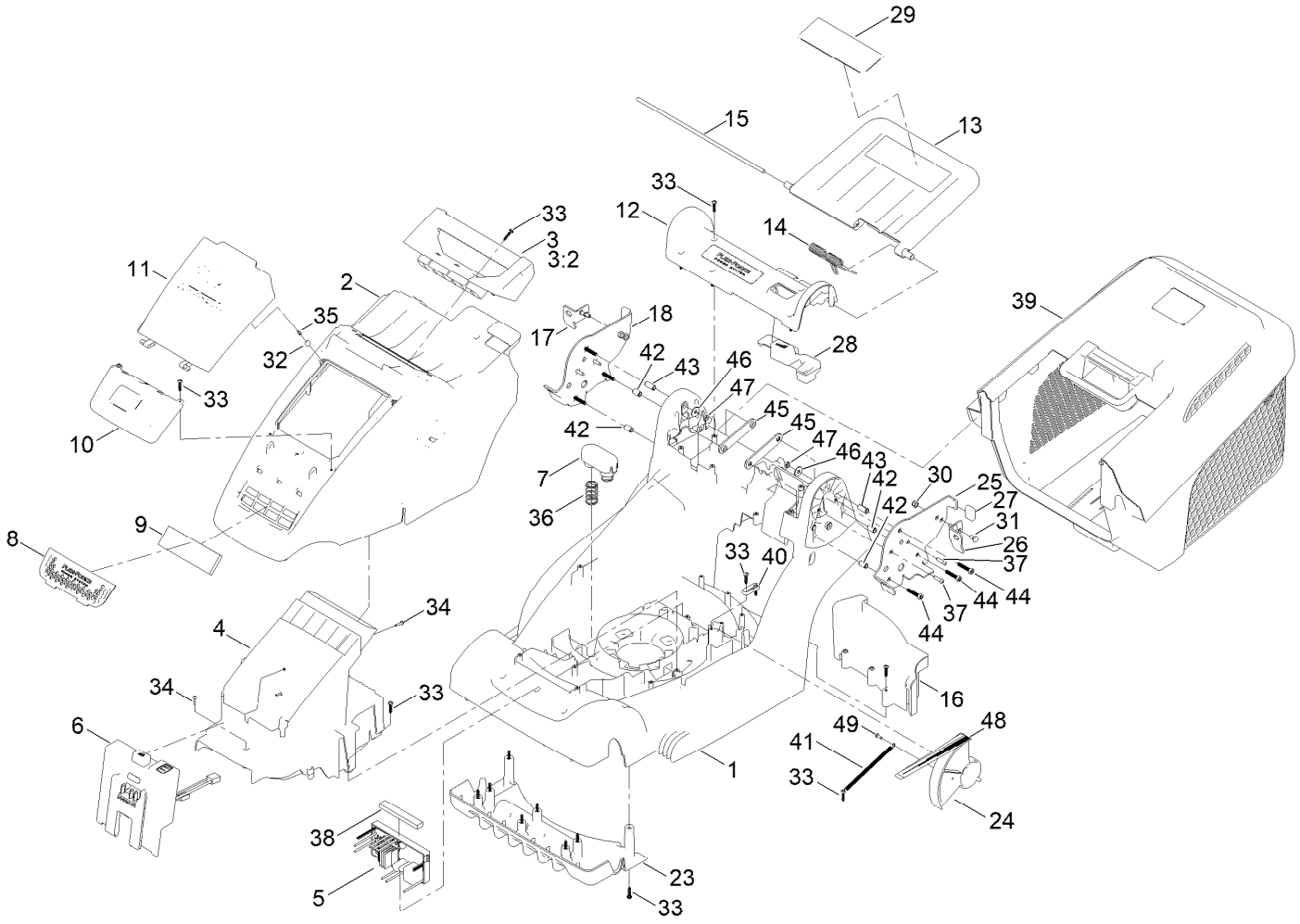

Frame Assembly (continued)

Ref.	Part Number	Qty.	Description
1	134-4441	1	Deck
2	134-5303	1	Top Cover
3	134-5312	1	Carry Handle ASM
3:2	134-5411	1	Artwork - 43CM
4	134-4450	1	Battery Holder
5	134-4378	1	Driver-Motor, Self Propelled
6	134-4105	1	Battery Interface Assembly
7	134-4372	1	Battery Spring Cover
8	134-4322	1	Air Inlet Grill-Toro
9	134-4341	1	Inner Filter-Foam
10	134-5316	1	Battery Door Lower, Printed
11	134-5313	1	Battery Door, Printed
12	134-4443	1	HOC Cover
13	134-5302	1	Rear Deflector
14	134-4037	1	Spring, Rear Deflector
15	134-4302	1	Rod, Rear Flap
16	134-6352	1	Grass Shield (43)
17	134-5177	1	Bracket, V-Stow, Right
18	134-4398	1	Mount Plate, Handlebar, Right
23	134-4100	1	Front Fins
24	134-6037	1	HOC Dial, Printed
25	134-4396	1	Mount Plate, Handlebar, Left
26	134-5175	1	Bracket, V-Stow, Left
27	134-4434	2	Rubber Foot-V-Stow
28	134-5300	1	HOC Button
29	162-1005	1	Decal - Safety 60V
30	134-5234	4	Nut-Hex
31	134-5235	4	Bolt-Carriage
32	114-5896	2	Magnet
33	134-7001	32	Screw-T
34	111-9903	5	Screw
35	134-4375	2	Screw-Txph
36	134-4371	2	Spring, Battery Eject
37	134-5431	10	Screw-T
38	134-5432	1	Filter, Air-Control Board
39	134-6362	1	Grass Box ASM
40	134-6367	1	Tab
41	134-6356	1	Spring
42	134-6369	4	Bush
43	134-6374	2	Bush
44	134-6371	6	Screw-Tsh
45	134-6370	2	Brace-Bar
46	134-5439	2	Washer-Plain
47	134-6376	2	Nut-Hex
48	134-6817	1	Decal - HOC (Toro 43CM)
49	134-5361	1	Screw-T

Battery Interface Assembly No. 134-4105

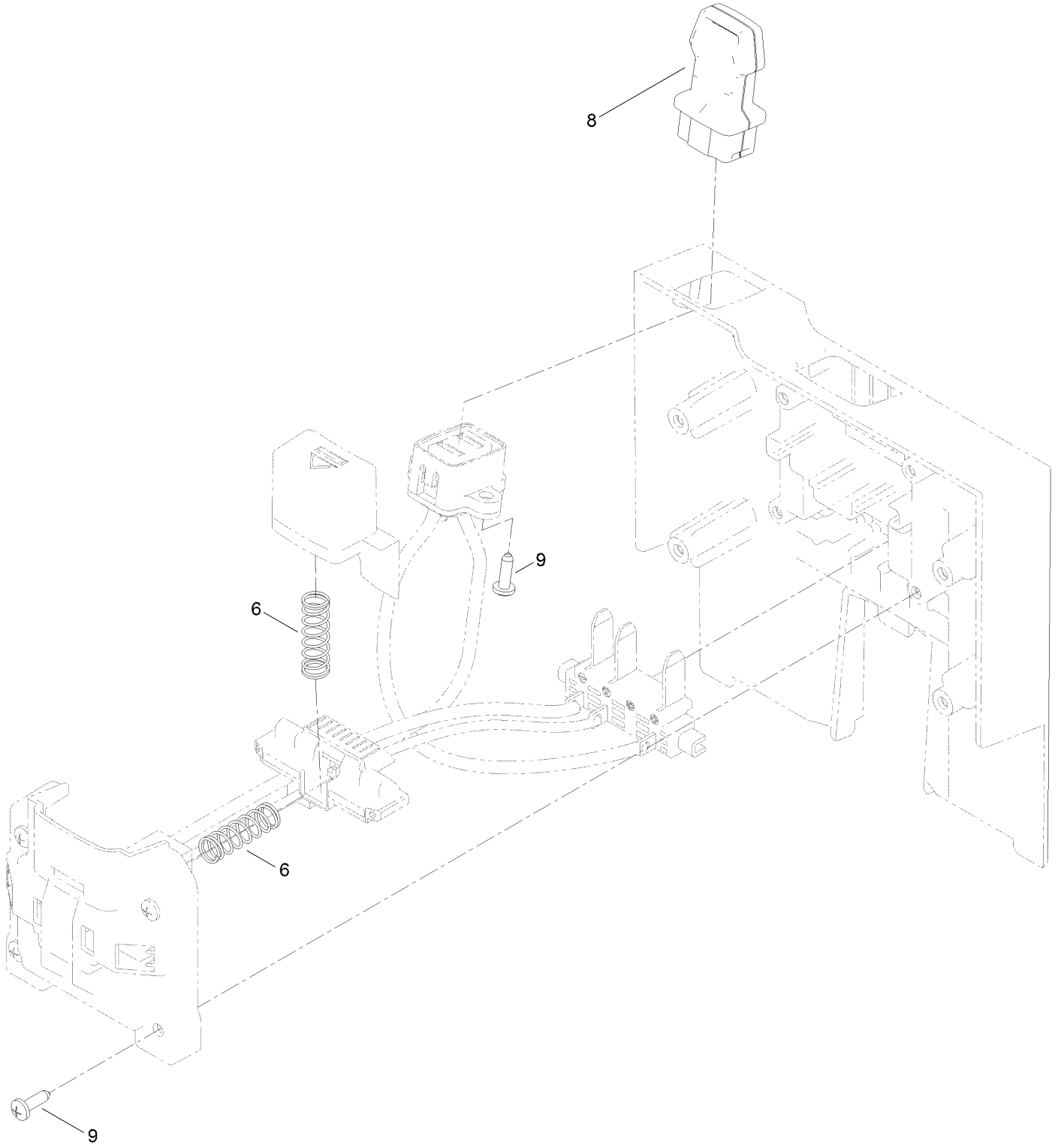

Battery Interface Assembly No. 134-4105 (continued)

Ref.	*Part Number*	*Qty.*	*Description*
6	134-5362	2	Spring, Battery Latch
8	134-4385	1	Power Key
9	134-5361	6	Screw-T

Grass Box Assembly No. 134-6362

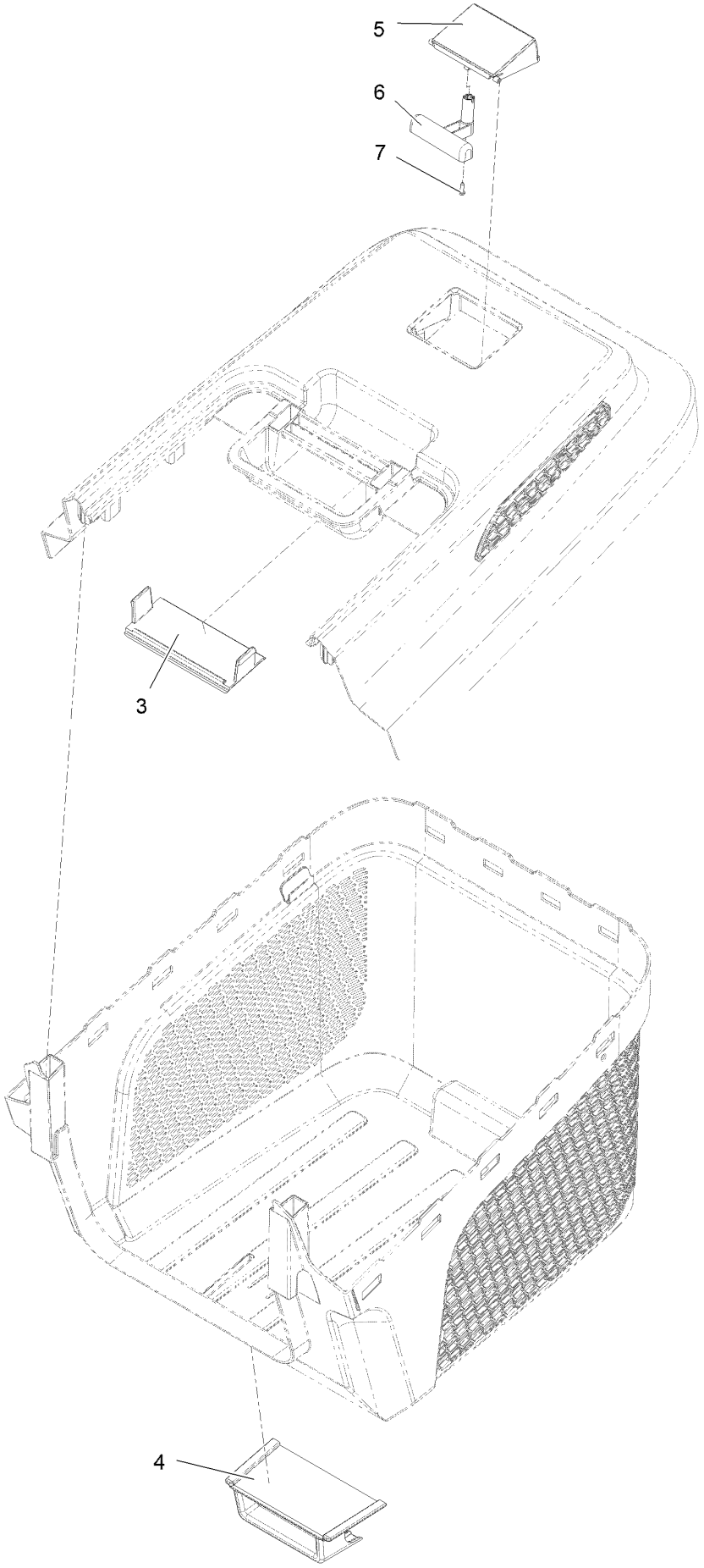

Grass Box Assembly No. 134-6362 (continued)

Ref.	Part Number	Qty.	Description
3	134-4141	1	Grass Box Handle Infill
4	134-4388	1	Grass Box Hook
5	134-4143	1	Grass Box Full Indicator
6	134-5430	1	Counter Weight
7	134-5435	1	Screw-T

Motor and Blade Assembly

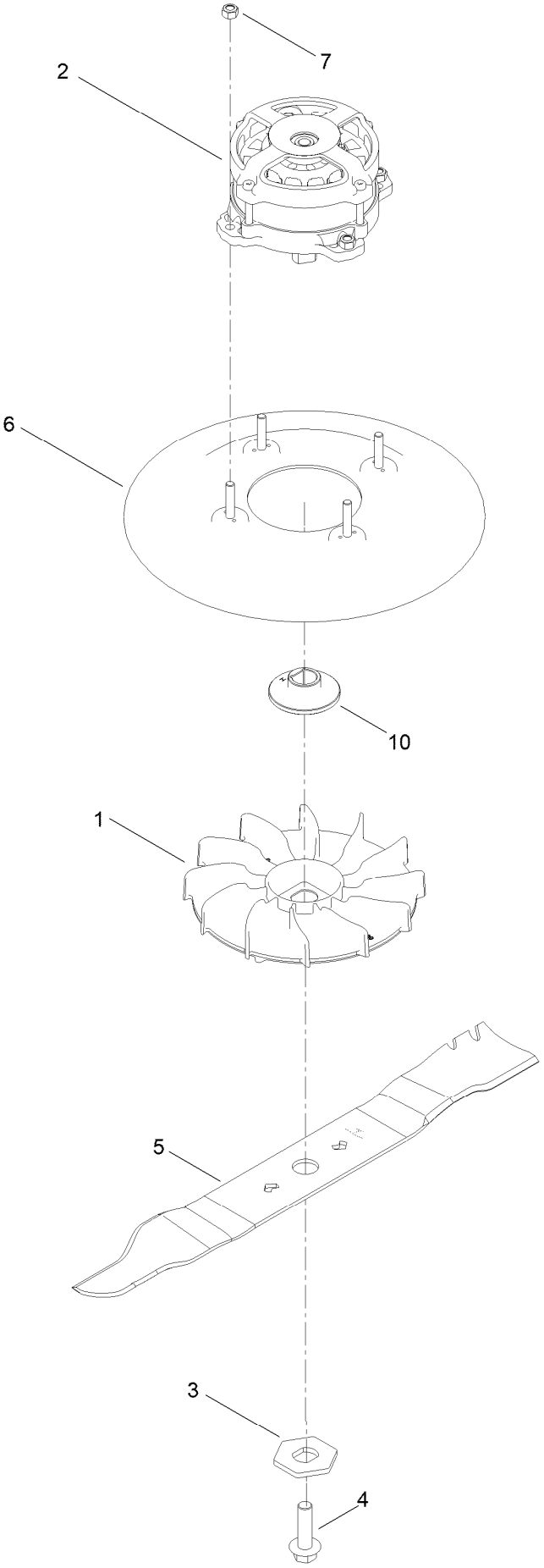

Motor and Blade Assembly (continued)

Ref.	Part Number	Qty.	Description
1	134-8648	1	Fan, Square Hole
2	134-4101	1	Motor, Brushless, 60V, 850W
3	134-8649	1	Washer, Hex
4	134-4383	1	Blade Bolt
5	134-5199	1	Blade, Mulch, 43CM
6	134-4024	1	Blade Cover
7	134-4467	4	Nut-Hex
10	134-8647	1	Boss, Blade Sintered

Traction and Height-of-Cut Assembly

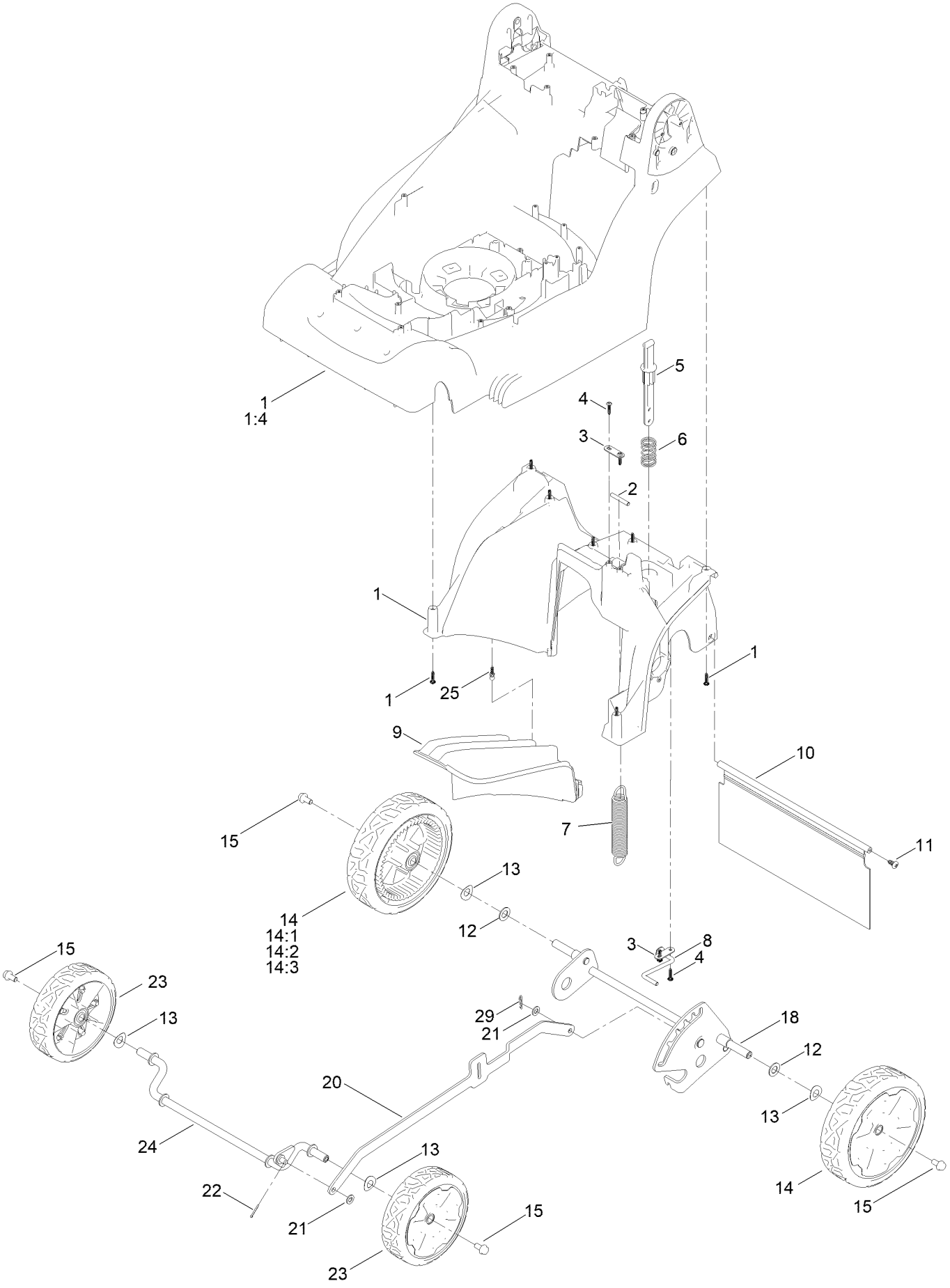

Traction and Height-of-Cut Assembly (continued)

Ref.	Part Number	Qty.	Description
1	134-6914	1	Deck, Glued (43)
1:4	134-5099	1	Decal - Safety
2	134-4096	1	Bar, Spring Mount
3	134-4394	2	Axle Plate, Small
4	134-7001	2	Screw-T
5	134-4319	1	HOC Button Plunger
6	134-4088	1	Spring, HOC Button
7	134-4092	1	HOC Spring, 4 Wheel
8	134-7568	1	HOC Wire ASM
9	134-5295	1	Mulch Plug
10	134-4437	1	Shield-Trailing
11	117-1092	2	Screw-PTH
12	ZWP1L000U	4	Washer-Plain
13	134-4457	4	Washer-Wave
14	134-4363	2	Wheel-Rear Assembly
14:1	134-4404	1	Wheel-Toro Rear
14:2	134-4377	2	Bearing
14:3	134-4366	1	Rear Wheel Trim - Toro
15	134-4358	4	Bolt-HF
18	134-4050	1	Rear Axle Frame, Assy, Wheel
20	134-4029	1	Con-Rod, 4 Wheel
21	106-4756	2	Washer-Plain
22	134-4454	2	Cotter Pin
23	134-4307	2	Wheel-Toro Front Assembly
24	134-4312	1	Front Axle, Assembly
25	134-5294	2	Pin, Retaining, Mulch Plug
29	134-6827	1	Cotter Pin

Handlebar and Control Assembly

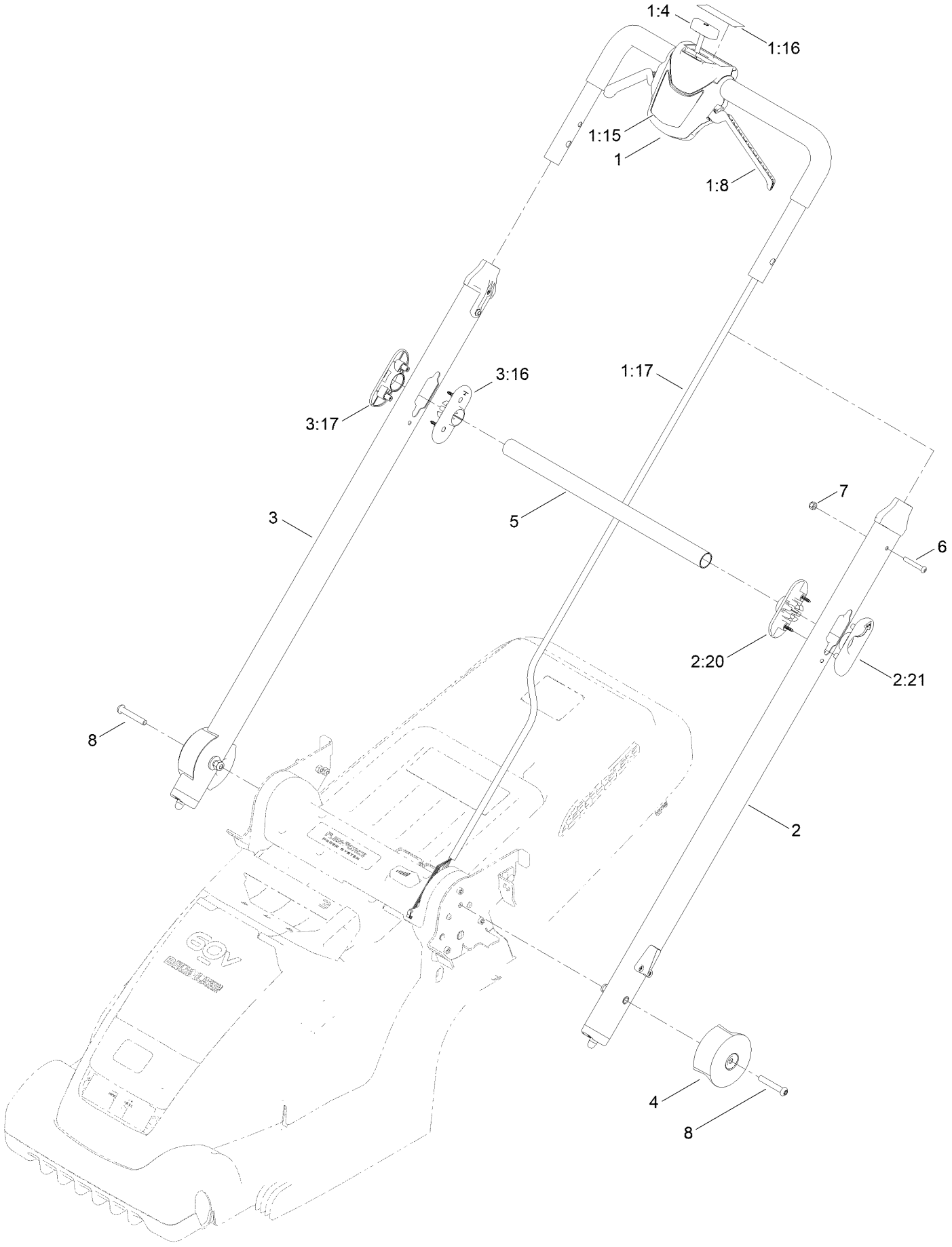

Handlebar and Control Assembly (continued)

Ref.	Part Number	Qty.	Description
1	134-6359	1	Control Lever ASM, Push
1:4	134-6903	1	Top Button Kit
1:8	134-6904	1	Upper Lever Kit (43)
1:15	134-2697	1	Decal - Volta Handle
1:16	134-5297	1	Decal - Boost Key Mat
1:17	134-5455	1	Wiring Loom, Push
2	134-6353	1	Handlebar ASM, LH
2:20	134-5308	1	Handlebar Brace - Inner
2:21	134-5309	1	Handlebar Brace, Outer
3	134-6354	1	Handlebar ASM, RH
3:16	134-5308	1	Handlebar Brace - Inner
3:17	134-5309	1	Handlebar Brace, Outer
4	134-4416	2	Handlebar End Cap
5	134-4458	1	Brace, Handlebar Release
6	134-5206	2	Bolt-P
7	134-5234	2	Nut-Hex
8	134-4492	2	Bolt, M8X50

Attachments and Accessories

For 21844T — Flex-Force Power System 60V MAX 43cm Lawn Mower

Product Name	Model/Part
60V Battery Charger 2 Amp CE	81802
60v Battery Charger 5 Amp International	81805
60V 2.5 AH Battery CE	81825
60V 4.0 AH Battery CE	81850
60V 6.0 AH Battery CE	81860
60V 7.5 AH Battery CE	81875
Battery Charger, 60V 2.0 Amp CE	86902
Battery Charger, 60V 5.4 Amp CE	86905
Battery Charger, 60V 2-Pod 4A CE	86924
Battery-LI-ION, 60V 2.5AH, 135WH	88925
Battery-LI-ION, 60V 4.0AH, 216WH	88941
Battery-LI-ION, 60V 6.0AH, 324WH	88960

Notes:

Notes:

Notes:



Count on it.