Form No. 3430-320 Rev B

TORO®

Count on it.

Parts Catalog

TX 427 Wide Track

Compact Tool Carrier

Model No. 22322—Serial No. 404720000 and Up

Register at www.Toro.com.
Original Instructions (EN)

CE

3430-320 B

Ordering Replacement Parts

To order replacement parts, please supply the part number, the quantity, and the description of each part desired.

Understanding Reference Numbers

Each identified part in an illustration has a reference number. The reference number for a part also appears in the parts list, along with other information about the part.

This catalog uses two special reference number formats, one to indicate parts in a service assembly and another to indicate the quantity of a given part in an illustration.

Service Assembly Reference Numbers

Parts in service assemblies have reference numbers in the form a:b. The a represents the reference number of the entire service assembly and the b represents a sequential number unique to each part within the service assembly.

For example, a wheel assembly might be identified by reference number 6, the tire by 6:1, the valve by 6:2, and the wheel by 6:3. When you order the assembly identified by reference number 6, you receive all parts identified by reference numbers 6:1,6:2, and 6:3. However, you may also order any part individually. Reference numbers of this type appear in illustration and in parts lists.

Reference Numbers Indicating Quantity

In an illustration, if a reference number indicates more than one part, the reference number has the form nX y. The n represents the quantity of the part, the X is the multiplication symbol, and the y represents the reference number.

For example, in an illustration, the reference number 2X 37 means that two of the parts identified by reference number 37 are indicated.

Contents

Main Frame Assembly 4
Grill, Side Cover and Counterweight Assembly 6
Engine, Exhaust and Control Lever Assembly 8
Fuel Tank and Carbon Canister Assembly 10
Air Cleaner Mount Assembly 12
Air Cleaner Assembly No. 93-2190 14
Hydraulic Pump Mount Assembly 16
Hydraulic Gear Pump Assembly No. 106-7650 18
Traction Hydraulic Assembly 20
Hydraulic Pump Assembly No. 106-5705 and 106-5706 22
Hydraulic Motor Assembly No. 114-1756 24
Main Hydraulic Assembly 26
One Spool Valve Assembly No. 104-2831 28
Two Spool Valve Assembly No. 106-9307 30
Hydraulic Pump Pulley Assembly 32
Track and Traction Assembly 34
Control Panel Assembly 36
Traction Control Assembly 38
Control Handle and Reference Bar Assembly 40
Brake Handle and Bracket Assembly 42
Wire Harness, Temperature Sensor and Shield Assembly 44
Battery, Key Switch and Fuel Gauge Assembly 46
Loader Arm Assembly 48
Loader Arm Hydraulic Assembly 50
Hydraulic Cylinder Assembly No. 139-0778 52
Hydraulic Cylinder Assembly No. 139-0776 54
Hydraulic Cylinder Assembly No. 139-0777 56
Quick Attach Assembly 58
Heat Exchanger Assembly 60
Hood and Fan Assembly 62
Attachments and Accessories 64

© 2026—The Toro® Company
8111 Lyndale Avenue South
Bloomington, MN 55420

Contact us at www.Toro.com.
Printed in the USA.
All Rights Reserved

Main Frame Assembly

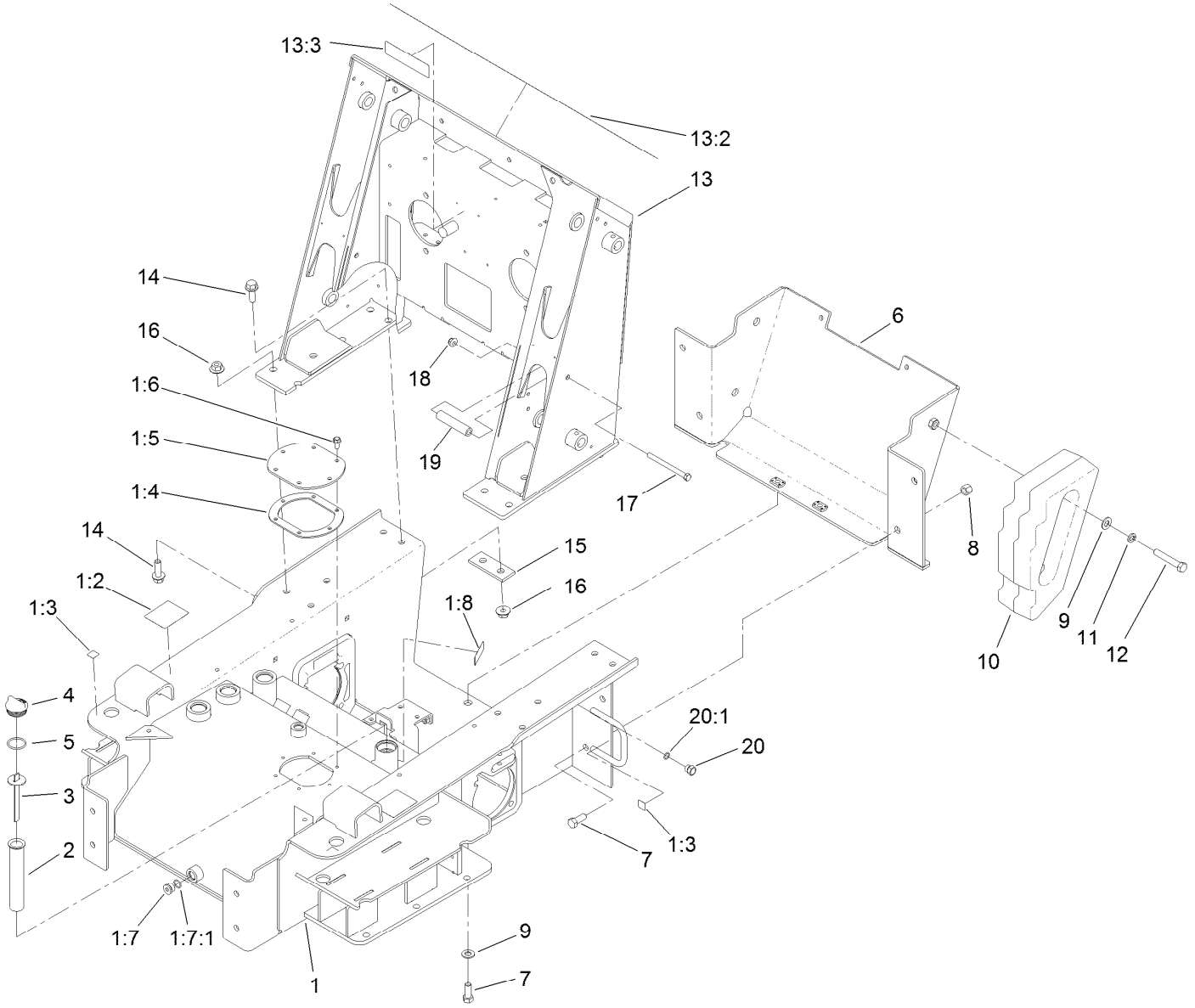

Main Frame Assembly (continued)

Ref.	Part Number	Qty.	Description
1	114-1352	1	Chassis ASM
1:2	100-4650	2	Decal-Warning
1:3	93-9084	4	Decal-Point, Lift
1:4	107-3557	1	Gasket-Cover, Access
1:5	108-6297-01	1	Cover-Tank
1:6	98-9940	6	Screw-HHF
1:7	353-988	2	Plug-Hex
1:7:1	237-79	1	O-Ring
1:8	93-6686	1	Decal-Oil, HYD
2	61-2790	1	Filter-Screen
3	100-2097	1	Dipstick-Oil
4	93-7498	1	Plug-Plastic
5	237-123	1	O-Ring
6	115-4565-01	1	Cover-Rear
7	325-5	6	Screw-HH
8	3296-23	4	Nut-Lock, NI
9	3256-26	6	Washer-Flat
10	99-6165-01	2	Counterweight-Rear
11	3253-7	4	Washer-Lock
12	325-12	4	Screw-HH
13	117-9982	1	Loader Tower ASM
13:2	138-0799	1	Decal-Panel, Control
13:3	93-7814	1	Decal-Danger
14	100-6116	10	Screw-HHF
15	100-6123-01	2	Plate-Stiffener
16	32128-52	10	Nut-Lock, Flg
17	323-23	2	Screw-HH
18	104-8301	2	Nut-HF, NI
19	100-1271	2	Tube-Spacer
20	353-508	1	Plug-HH
20:1	237-42	1	O-Ring

Grill, Side Cover and Counterweight Assembly

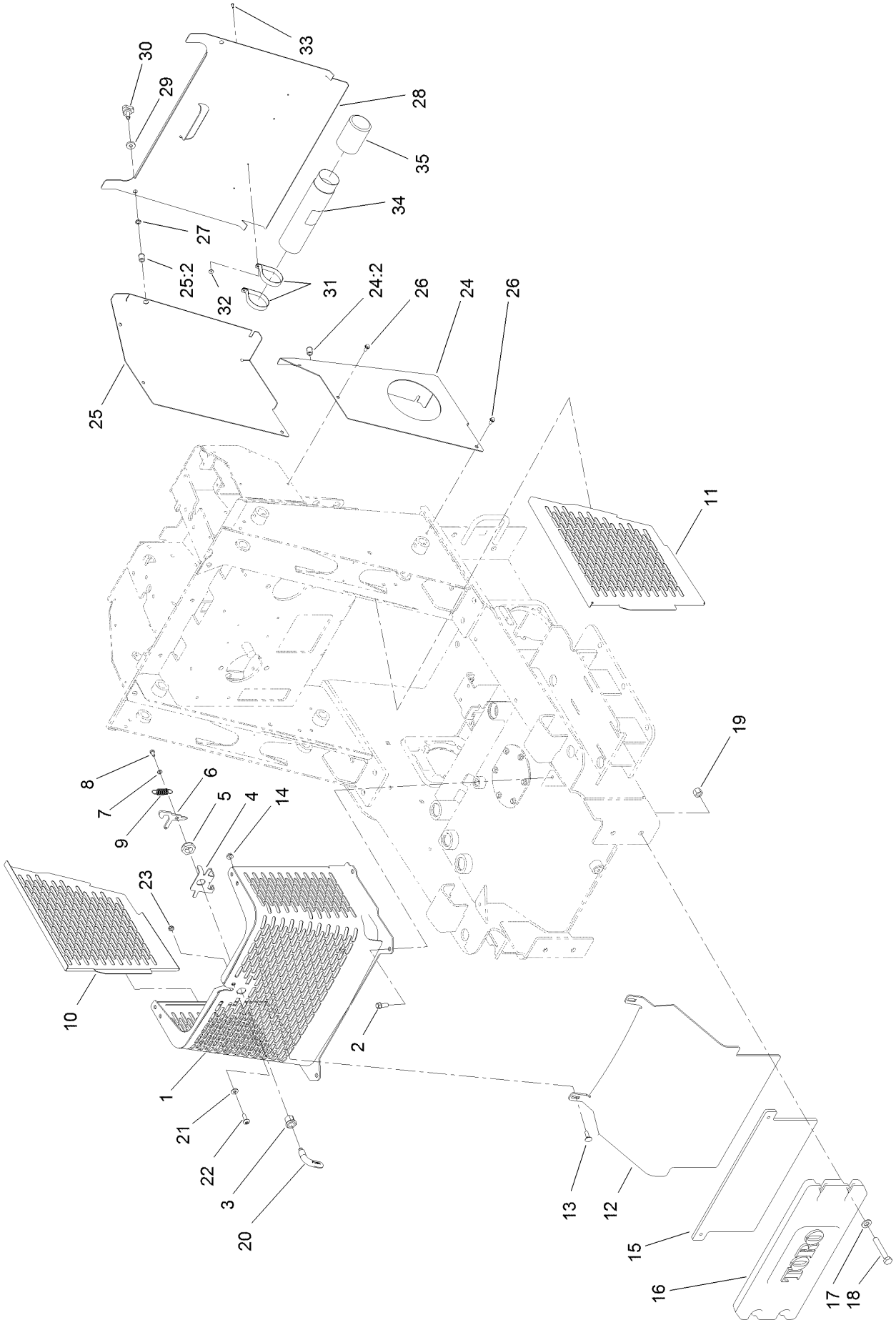

Grill, Side Cover and Counterweight Assembly (continued)

Ref.	Part Number	Qty.	Description
1	117-9998-03	1	Grill
2	95-1726	4	Screw-Taptite
3	106-9335	1	Housing-Latch
4	106-5729	1	Bracket-Latch
5	3296-60	1	Nut-Lock, NI
6	106-5728	1	Cam-Latch
7	3253-3	1	Washer-Lock
8	321-2	1	Screw-HH
9	104-0869	1	Spring
10	106-5727-03	1	Panel-Side, RH
11	106-5726-03	1	Panel-Side, LH
12	117-9994-03	1	Plate-Front
13	3230-28	2	Screw-CARR
14	32128-20	2	Nut-HF
15	117-9995-03	1	Plate-Counterweight
16	99-6166-01	1	Counterweight-Front
17	3256-26	4	Washer-Flat
18	325-12	4	Screw-HH
19	3296-23	4	Nut-Lock, NI
20	108-5639	1	Handle-Latch
21	3256-2	1	Washer-Flat
22	107-8021	1	Screw-PTH
23	3296-47	1	Nut-Lock,NI
24	106-9343	1	LH Rear Cover Support ASM
24:2	32148-9	1	Nut-Clinch
25	106-9342	1	RH Rear Cover Support ASM
25:2	32148-9	1	Nut-Clinch
26	9266714	6	Screw-HWH
27	32151-72	2	Ring-Retaining
28	106-9339-01	1	Cover-Access, Rear
29	106-0565	2	Washer-Rubber
30	95-9648	2	Knob
31	2412-120	2	Clamp-R
32	3269-10	2	Washer-Back
33	3269-17	2	Rivet-Pop
34	104-7050	1	Tube-Manual
35	104-7048	1	Cap-Housing

Engine, Exhaust and Control Lever Assembly

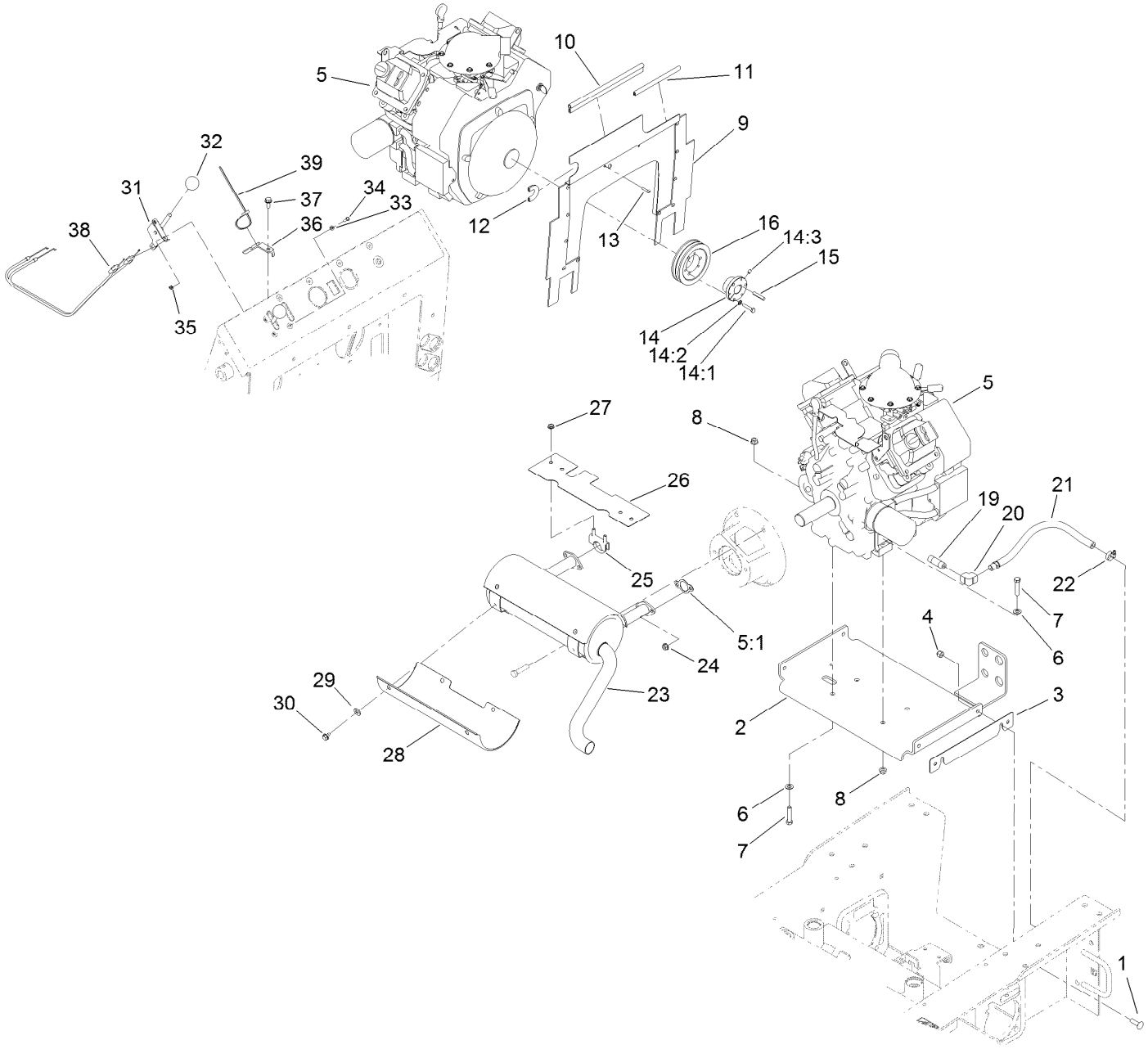

Engine, Exhaust and Control Lever Assembly (continued)

Ref.	Part Number	Qty.	Description
1	3231-28	4	Screw-CARR
2	114-1288-03	1	Plate-Mounting, Engine
3	117-1811	1	Shim-Strap
4	3296-39	4	Nut-Lock, NI
5		1	Engine-Kohler, Ch740-3136 ●■
5:1	93-0350	2	Gasket-Exhaust
6	48-9220	4	Washer-Flat
7	323-9	4	Screw-HH
8	32128-21	4	Nut-HF Lock
9	114-8725	1	Baffle-Engine
10	115-4837	1	Strip-Seal, 10.5 Inch
11	105-0378	1	Seal-Strip, 6.5 Inch
12	105-0377	1	Seal-Strip, 3 Inch
13	32144-36	2	Screw-PPH
14	61-3340	1	Bushing
14:1	321-13	3	Screw-HH
14:2	3253-2	3	Washer-Lock
14:3	3245-2	1	Screw-Set, HSH
15	67-7490	1	Key-Square
16	61-3330	1	Pulley
19	289-42	1	Nipple
20	94-9650	1	Elbow-90 DEG
21	100-1256	1	Oil Hose ASM
22	2412-36	1	Clamp-Hose
23	115-1509	1	Muffler
24	112-2844	4	Nut-HF
25	114-1365	2	Clamp-Muffler
26	114-1366	1	Shield-Manifold
27	32128-25	4	Nut-HF
28	117-9973	2	Shield-Muffler
29	3256-3	8	Washer-Flat
30	9266934	8	Screw
31	108-9730	2	Lever-Control
32	233-42	2	Knob
33	3256-51	4	Washer-Flat
34	3290-134	4	Screw
35	32149-7	4	Nut-Keps
36	100-1299-03	1	Guide-Cable
37	32144-11	1	Screw-HWH
38	108-4679	2	Cable-Throttle/Choke
39	3290-378	1	Tie-Cable

● Not serviced separately

■ Obtain parts from www.kohlerplus.com

Fuel Tank and Carbon Canister Assembly

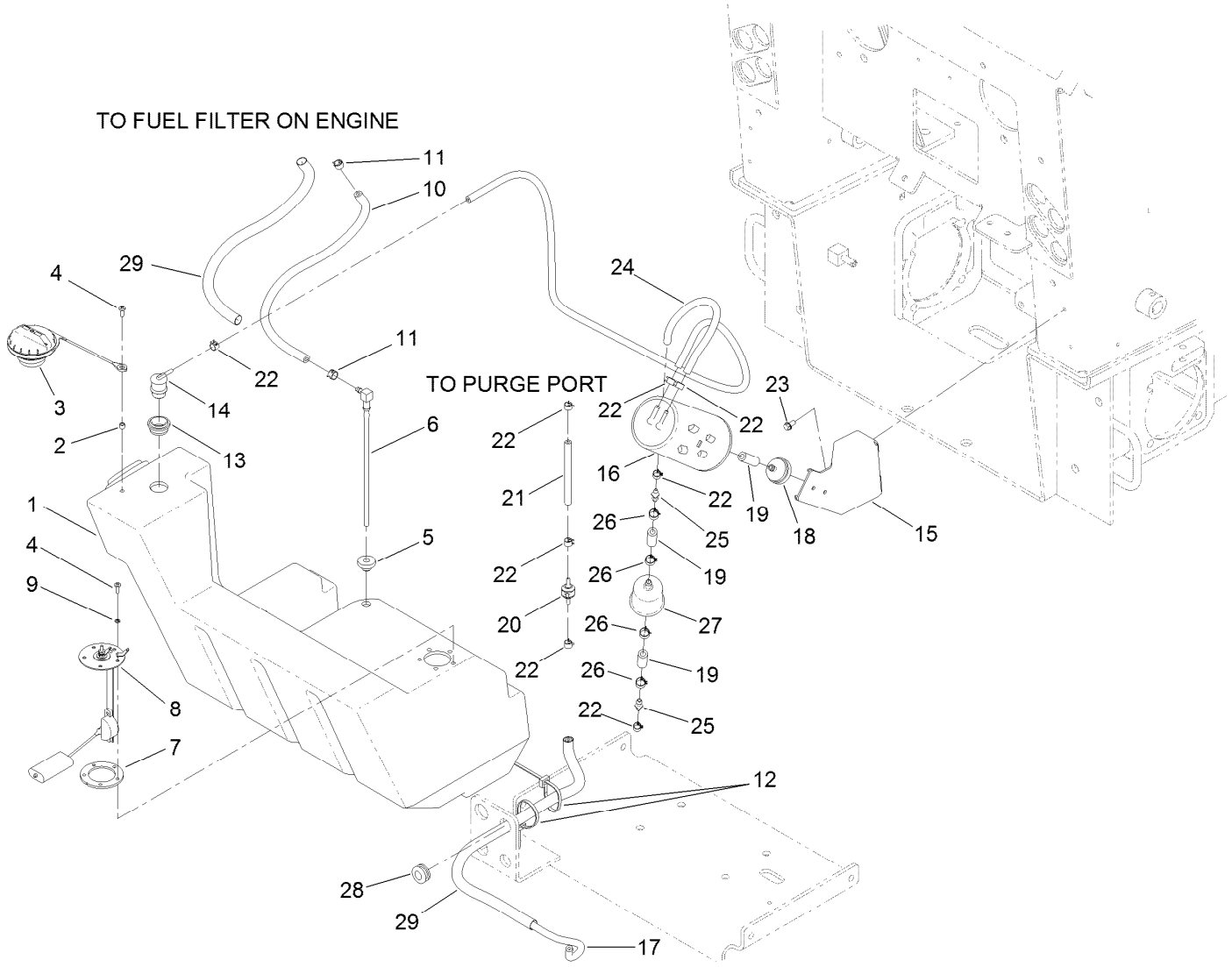

Fuel Tank and Carbon Canister Assembly (continued)

Ref.	Part Number	Qty.	Description
1	117-9956	1	Tank-Fuel
2	117-9965	1	Spacer
3	117-1722	1	Cap-Fuel
4	3250-31	6	Screw-PPH
5	46-6560	1	Bushing
6	98-0185	1	Pipe-Stand
7	113372	1	Gasket-Sender, Fuel
8	100-1298	1	Sender-Fuel
9	3253-17	5	Washer-Lock
10	109-0301	1	Hose-Fuel
11	2412-98	2	Clamp-Hose
12	3290-378	3	Tie-Cable
13	114-0284	1	Grommet
14	114-0285	1	Valve-Rollover
15	117-4043-03	1	Holder-Canister
16	127-8685	1	Canister-Carbon
17	119-3517	2	Hose-Fuel
18	115-7854	1	Filter-Fuel, Inline
19	106-5317	3	Hose-Fuel
20	133-8499	1	Valve-Check, Vacuum
21	115-4736	1	Hose-Fuel
22	2412-146	8	Clamp-Hose
23	9266714	2	Screw-HWH
24	51-3217	1	Hose-Fuel
25	106-8150	2	Fitting-Straight
26	92-2379	4	Clamp-Hose
27	120-2235	1	Filter-Fuel
28	94-1389	1	Grommet
29	131-0575	2	Sleeve-Thermal

Air Cleaner Mount Assembly

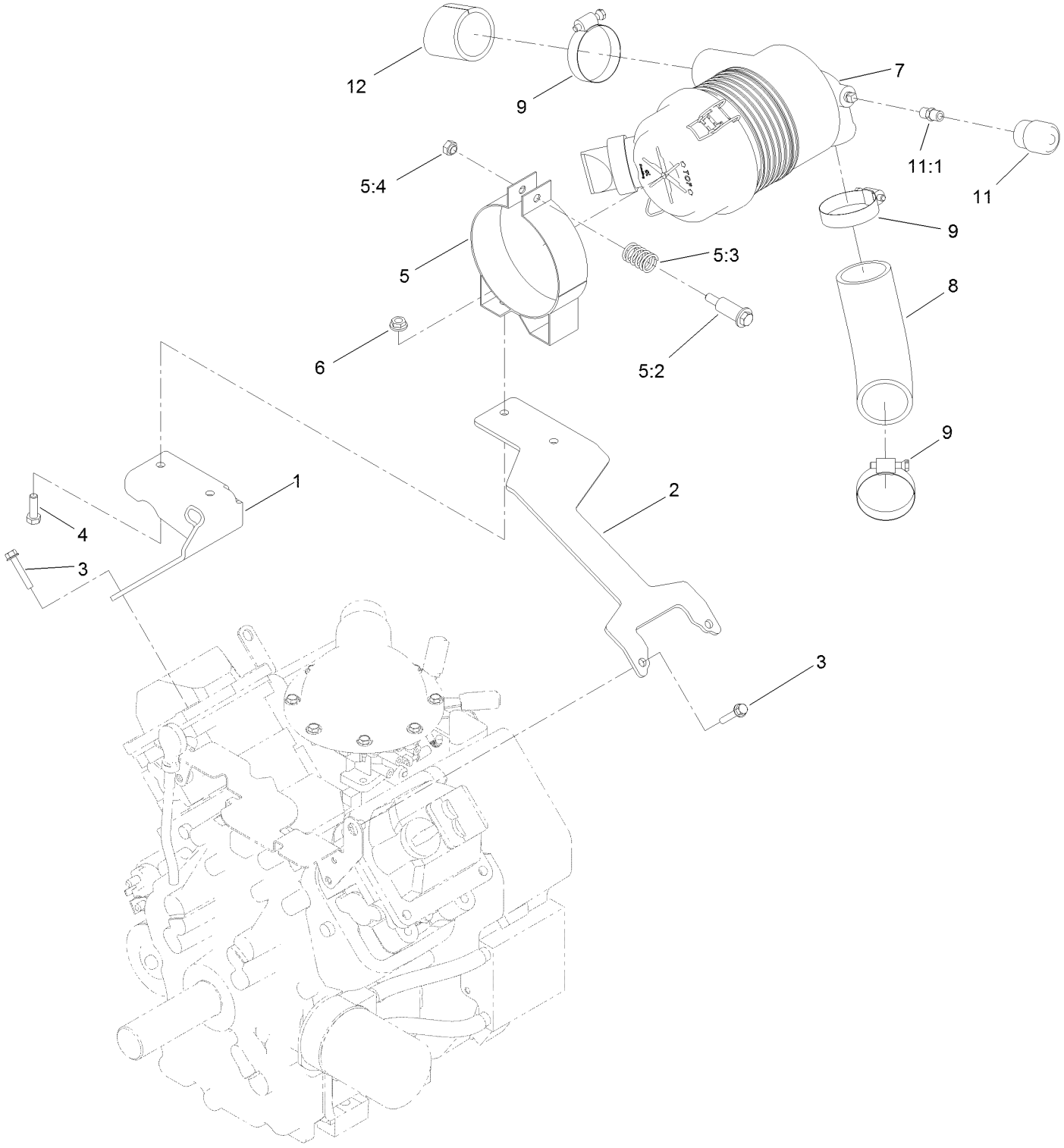

Air Cleaner Mount Assembly (continued)

Ref.	Part Number	Qty.	Description
1	117-1729-03	1	Bracket-Support, Right
2	117-1728-03	1	Bracket-Support, Left
3	33103-035	4	Screw-HHF
4	322-5	2	Screw-HH
5	93-2191	1	Air Cleaner Mounting Band ASM
5:2	94-3653	1	Bolt
5:3	94-3654	1	Spring
5:4	48-9510	1	*obs* Nut
6	32128-20	2	Nut-HF
7	93-2190	1	Air Cleaner ASM
8	114-8734	1	Hose-Air Cleaner
9	2412-92	3	Clamp-Hose
11	104-3563	1	Indicator
11:1	94-1416	1	Adapter-Indicator
12	114-1364	1	Tube-Inlet, Air

Air Cleaner Assembly No. 93-2190

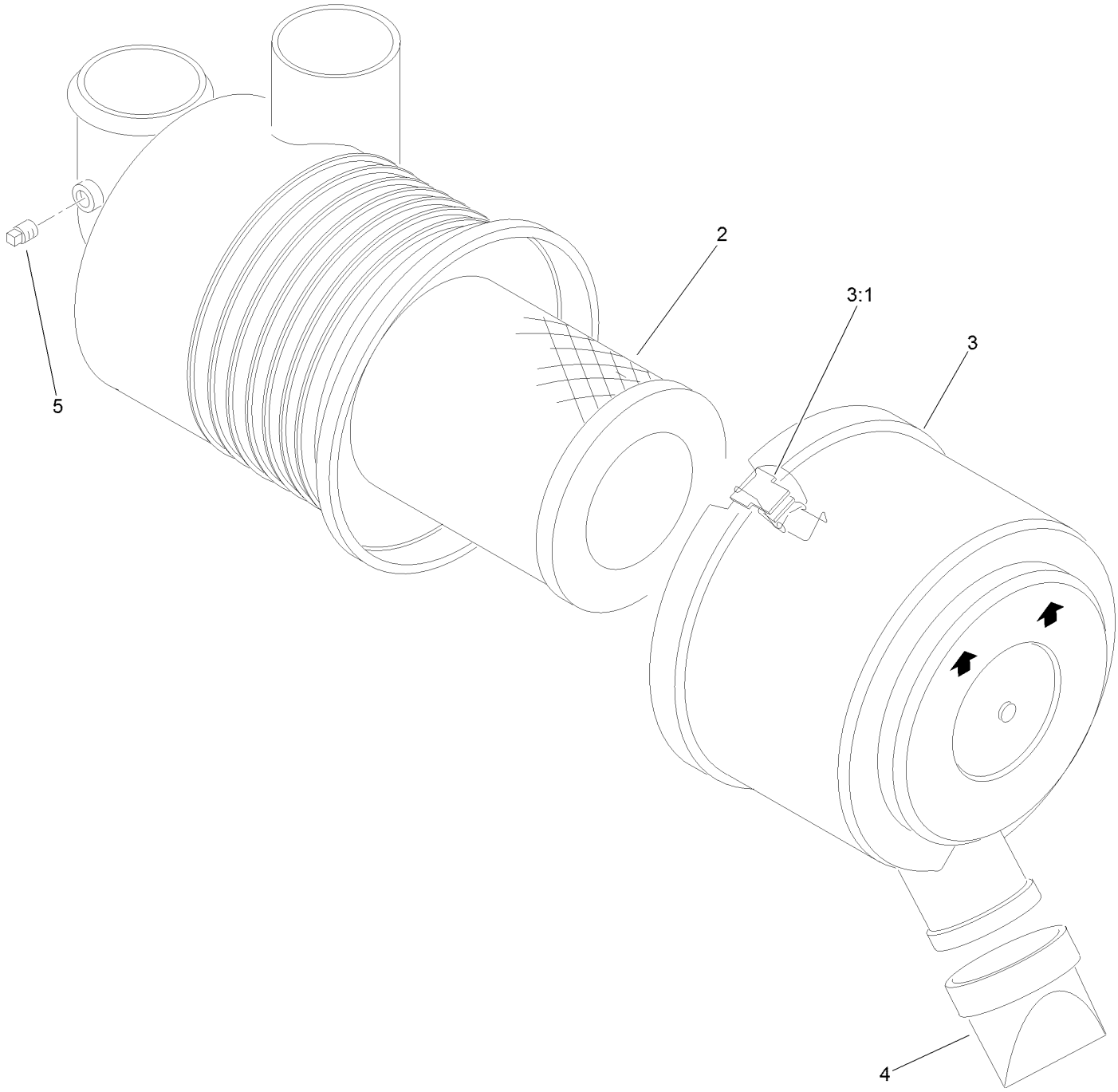

Air Cleaner Assembly No. 93-2190 (continued)

Ref.	Part Number	Qty.	Description
2	108-3811	1	Filter-Air V-Twin HD
3	94-3652	1	Cover ASM
3:1	1-643283	2	Latch-Cleaner, Air
4	87-9400	1	Valve-Vacuator
5	285-17	1	Plug-Pipe

Hydraulic Pump Mount Assembly

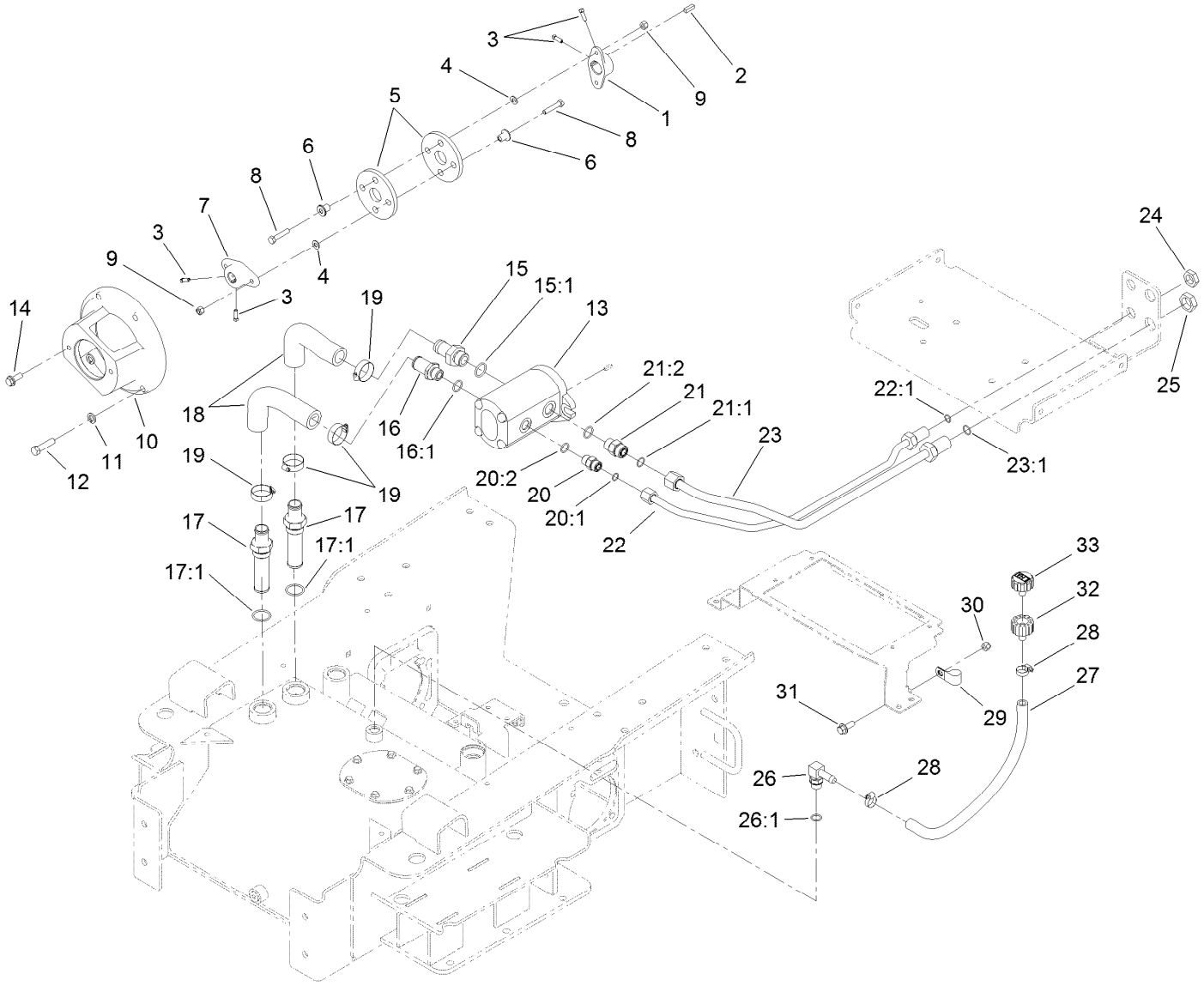

Hydraulic Pump Mount Assembly (continued)

Ref.	Part Number	Qty.	Description
1	110-5236	1	Hub-Engine
2	10-7070	1	Key-Square
3	3241-6	4	Screw-SQH
4	3256-23	4	Washer-Plain
5	115-4523	2	Coupling-Rubber
6	71-4411	4	Spacer
7	110-9695	1	Hub-Pump
8	322-8	4	Screw-HH
9	3296-29	4	Nut-Lock, NI
10	98-2751-03	1	Mount-Pump
11	3253-6	4	Washer-Lock
12	324-7	4	Screw-HH
13	106-7650	1	HYD Pump ASM
14	66-9300	2	Screw-HHF
15	99-3017	1	Fitting
15:1	237-81	1	O-Ring
16	131-0573	1	Fitting-STR
16:1	237-80	1	O-Ring
17	112-0211	2	Strainer Fitting ASM
17:1	237-146	1	O-Ring
18	131-0585	2	Hose-Suction, Formed
19	2412-34	4	Clamp-Hose
20	340-4	1	Fitting-Straight
20:1	237-30	1	O-Ring
20:2	237-79	1	O-Ring
21	340-7	1	Fitting-Straight
21:1	237-65	1	O-Ring
21:2	237-80	1	O-Ring
22	114-1356	1	HYD Tube ASM
22:1	237-30	1	O-Ring
23	114-1355	1	HYD Tube ASM
23:1	237-65	1	O-Ring
24	340-127	1	Nut-Bulkhead
25	340-74	1	Nut-Lock, Bulkhead
26	354-120	1	Fitting-Elbow, 90
26:1	237-79	1	O-Ring
27	98-4667	1	Hose
28	2412-36	2	Clamp-Hose
29	2412-4	1	Clamp-R
30	3296-39	1	Nut-Lock, NI
31	3234-42	1	Screw-HHF
32	92-8020	1	Adapter-Breather
33	68-6150	1	Breather

Hydraulic Gear Pump Assembly No. 106-7650

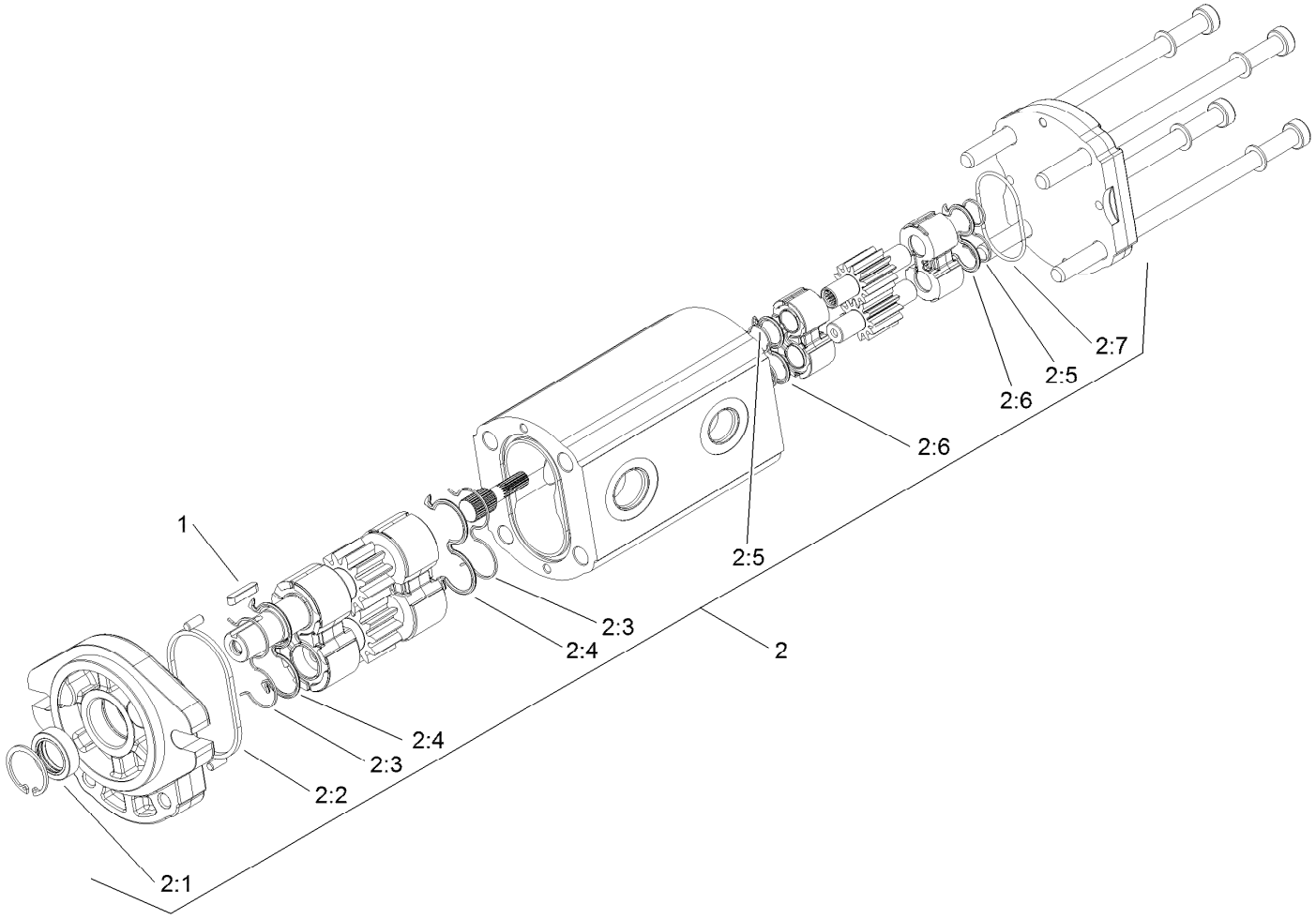

Hydraulic Gear Pump Assembly No. 106-7650 (continued)

Ref.	Part Number	Qty.	Description
1	100-4238	1	Key-Square
2	107-9316	1	Seal Kit
2:1		1	Seal-Shaft ●
2:2		1	Seal-Square ●
2:3		2	Ring-Backup ●
2:4		2	Seal-Gear ●
2:5		2	Ring-Backup ●
2:6		2	Seal-Gear-Rear ●
2:7		1	O-Ring ●

● Not serviced separately

Traction Hydraulic Assembly

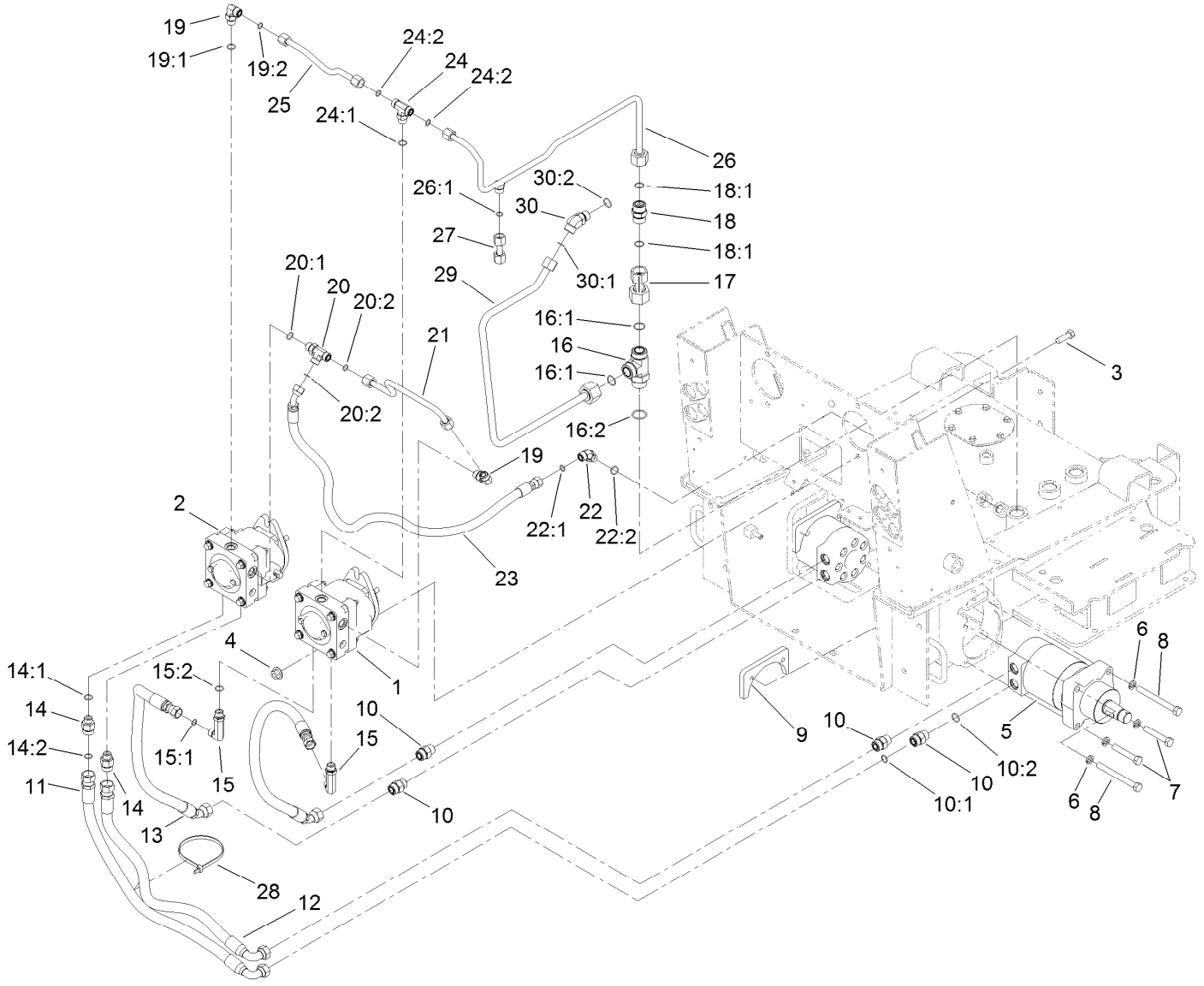

Traction Hydraulic Assembly (continued)

Ref.	Part Number	Qty.	Description
1	106-5706	1	RH HYD Pump ASM
2	106-5705	1	LH HYD Pump ASM
3	325-6	4	Screw-HH
4	32128-52	4	Nut-Lock, Flg
5	114-1756	2	HYD Motor ASM
6	3253-7	8	Washer-Lock
7	115-4845	4	Screw-HH, TAP
8	325-19	4	Screw-HH
9	98-2763-03	2	Plate-Mounting
10	340-7	4	Fitting-Straight
10:1	237-65	1	O-Ring
10:2	237-80	1	O-Ring
11	115-4829	1	Hose-HYD
12	115-4826	1	Hose-HYD
13	98-0233	2	Hose-HYD
14	340-155	2	Fitting-Straight
14:1	237-79	1	O-Ring
14:2	237-151	1	O-Ring
15	99-6160	2	Fitting-Elbow, 90 Long
15:1	237-30	1	O-Ring
15:2	237-79	1	O-Ring
16	104-3795	1	Fitting-Tee
16:1	340-65	2	O-Ring
16:2	237-146	1	O-Ring
17	105-0226	1	Tube-HYD
18	99-6161	1	HYD Check Valve ASM
18:1	237-58	2	O-Ring
19	340-98	2	Fitting-Elbow, 90 DEG
19:1	237-79	1	O-Ring
19:2	237-30	1	O-Ring
20	340-109	1	Fitting-Tee
20:1	237-79	1	O-Ring
20:2	237-30	2	O-Ring
21	98-0200	1	Tube-HYD
22	340-101	1	Fitting-HYD, 45 DEG
22:1	237-30	1	O-Ring
22:2	237-79	1	O-Ring
23	98-0201	1	Hose-HYD
24	340-157	1	Fitting-HYD, Tee
24:1	237-79	1	O-Ring
24:2	237-30	2	O-Ring
25	106-9330	1	Tube-HYD
26	108-4665	1	HYD Tube ASM
26:1	237-30	1	O-Ring
27	108-4666	1	Tube-HYD
28	3334-945	1	Tie-Cable
29	117-3988	1	Tube-HYD
30	340-14	1	Fitting-HYD, 45 DEG
30:1	237-65	1	O-Ring
30:2	237-80	1	O-Ring

Hydraulic Pump Assembly No. 106-5705 and 106-5706

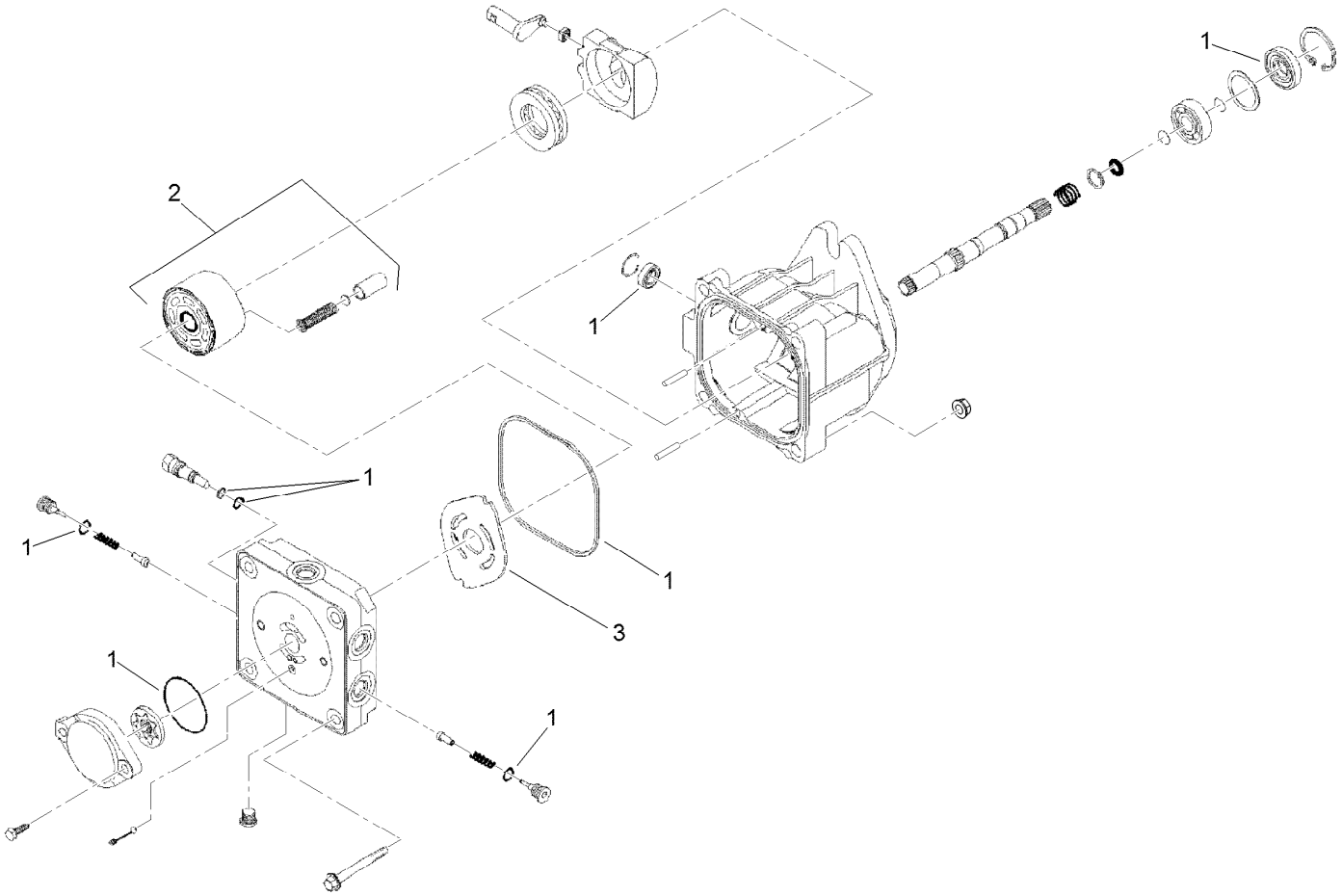

Hydraulic Pump Assembly No. 106-5705 and 106-5706 (continued)

Ref.	*Part Number*	*Qty.*	*Description*
1	100-6110	1	Overhaul Seal Kit
2	94-1913	1	Cylinder Block ASM
3	100-6112	1	Plate-Valve

Hydraulic Motor Assembly No. 114-1756

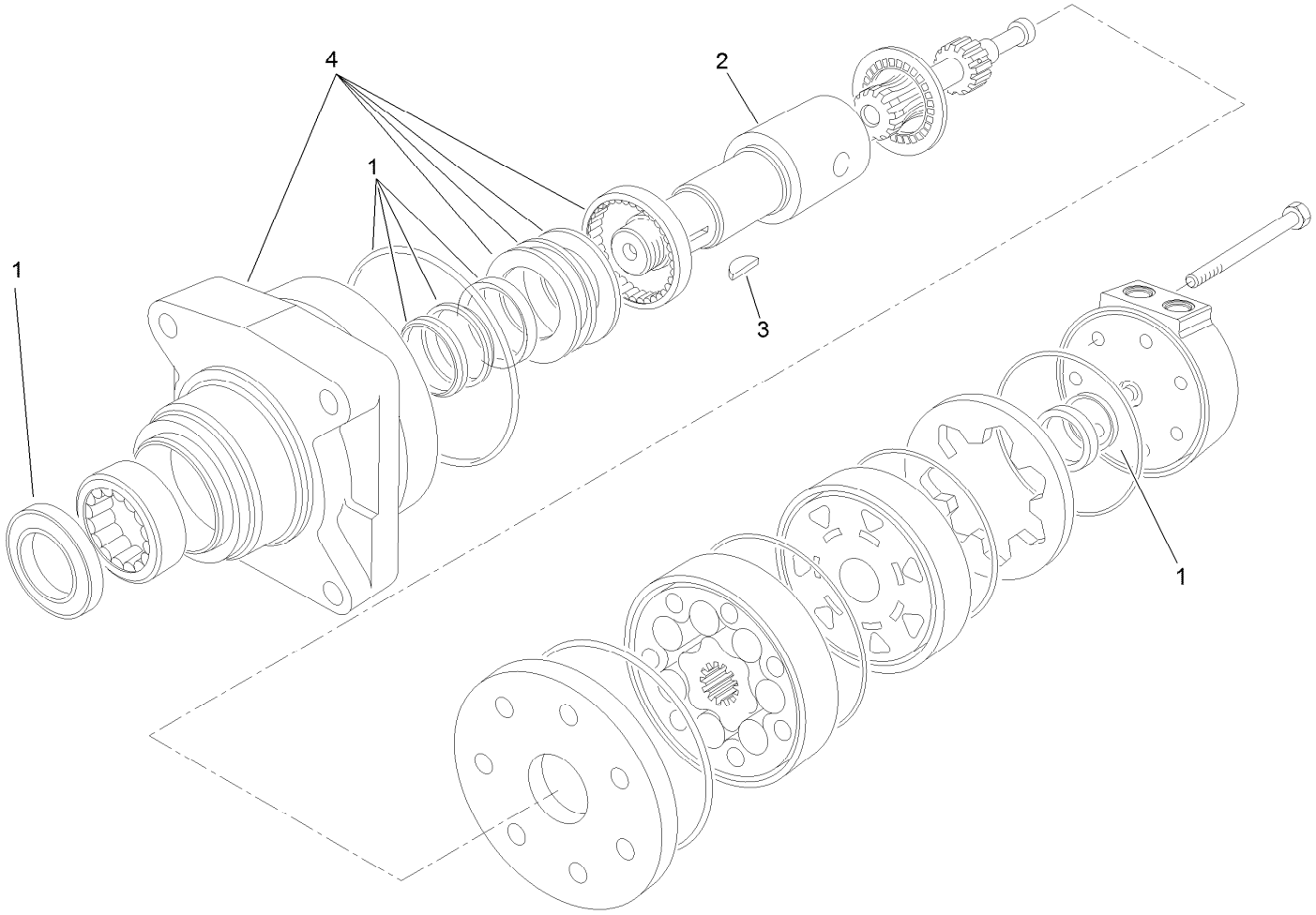

Hydraulic Motor Assembly No. 114-1756 (continued)

Ref.	Part Number	Qty.	Description
1	100-6131	1	Seal Kit
2	106-7645	1	Coupling-Shaft
3	3257-42	1	Key-Woodruff
4	120-5393	1	Motor Housing ASM

Main Hydraulic Assembly

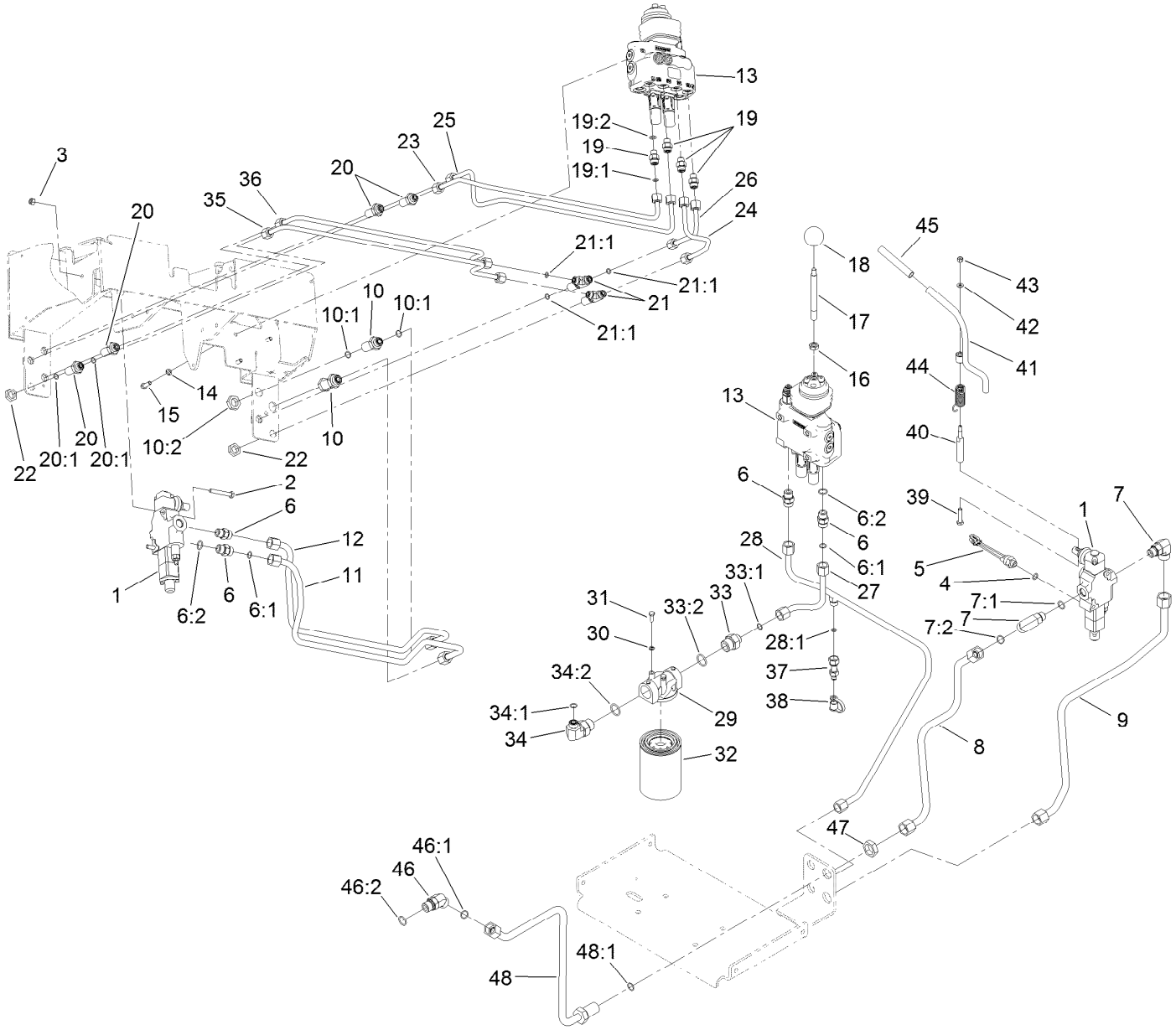

Main Hydraulic Assembly (continued)

Ref.	Part Number	Qty.	Description
1	104-2831	1	1 Spool Valve ASM
2	322-11	2	Screw-HH
3	3296-29	2	Nut-Lock, NI
4	237-42	1	O-Ring
5	72-4310	1	Switch-Ball
6	340-4	4	Fitting-Straight
6:1	237-30	1	O-Ring
6:2	237-79	1	O-Ring
7	340-153	2	Fitting-Elbow, 90 DEG
7:1	237-79	1	O-Ring
7:2	237-151	1	O-Ring
8	104-5707	1	Tube-HYD
9	106-9309	1	Tube-HYD
10	340-161	2	Fitting-Bulkhead
10:1	237-30	2	O-Ring
10:2	340-127	1	Nut-Bulkhead
11	106-9310	1	Tube-HYD
12	106-9311	1	Tube-HYD
13	106-9307	1	2 Spool Valve ASM
14	3253-4	3	Washer-Lock
15	322-4	3	Screw-HH
16	51-2070	1	Nut
17	108-4675	1	Shaft-Handle, Loader
18	233-21	1	Knob
19	340-2	4	Fitting-Straight
19:1	237-22	1	O-Ring
19:2	237-42	1	O-Ring
20	340-71	4	Fitting-Straight, Bulkhead
20:1	237-22	2	O-Ring
21	340-68	2	Fitting-Tee, Bulkhead
21:1	237-22	3	O-Ring
22	340-70	6	Nut-Lock
23	106-9312	1	Tube-HYD
24	106-9313	1	Tube-HYD
25	106-9314	1	Tube-HYD
26	106-9315	1	Tube-HYD
27	106-9385	1	Tube-HYD
28	106-9387	1	HYD Tube ASM
28:1	237-22	1	O-Ring
29	92-5821	1	Head-Filter
30	3253-3	2	Washer-Lock
31	321-4	2	Screw-HH
32	86-3010	2	Filter-Oil
33	100-4240	1	Fitting-STR
33:1	237-30	1	O-Ring
33:2	237-81	1	O-Ring
34	340-131	1	Fitting-HYD, 90 DEG
34:1	237-30	1	O-Ring
34:2	237-81	1	O-Ring
35	106-9316	1	Tube-HYD
36	106-9317	1	Tube-HYD
37	86-5480	1	Nipple-Test
38	354-79	1	Cap-Dust
39	33114-035	1	Screw-HH
40	104-2827	1	Spacer-Hiflo
41	112-2739	1	Lever-Auxiliary
42	3256-16	1	Washer-Flat
43	3296-42	1	Nut-Lock, NI
44	112-2738	1	Spring-Torsion
45	112-2605	1	Grip-Rubber
46	340-14	1	Fitting-HYD, 45 DEG
46:1	237-65	1	O-Ring
46:2	237-80	1	O-Ring
47	340-74	1	Nut-Lock, Bulkhead
48	106-9333	1	HYD Tube ASM
48:1	237-65	1	O-Ring

One Spool Valve Assembly No. 104-2831

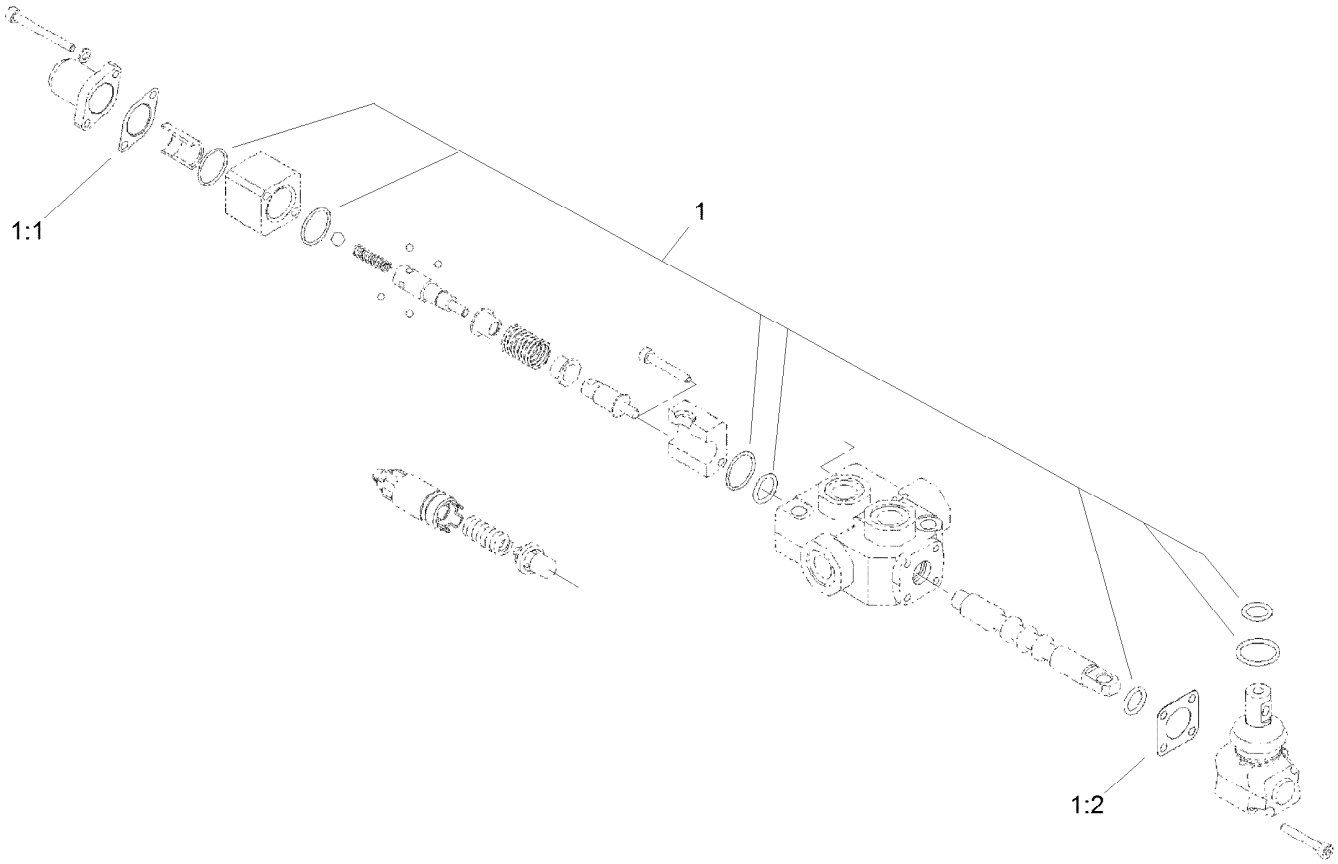

One Spool Valve Assembly No. 104-2831 (continued)

Ref.	*Part Number*	*Qty.*	*Description*
1	99-4390	1	Seal Kit
1:1	99-3074	4	Gasket
1:2	99-3075	8	Gasket

Two Spool Valve Assembly No. 106-9307

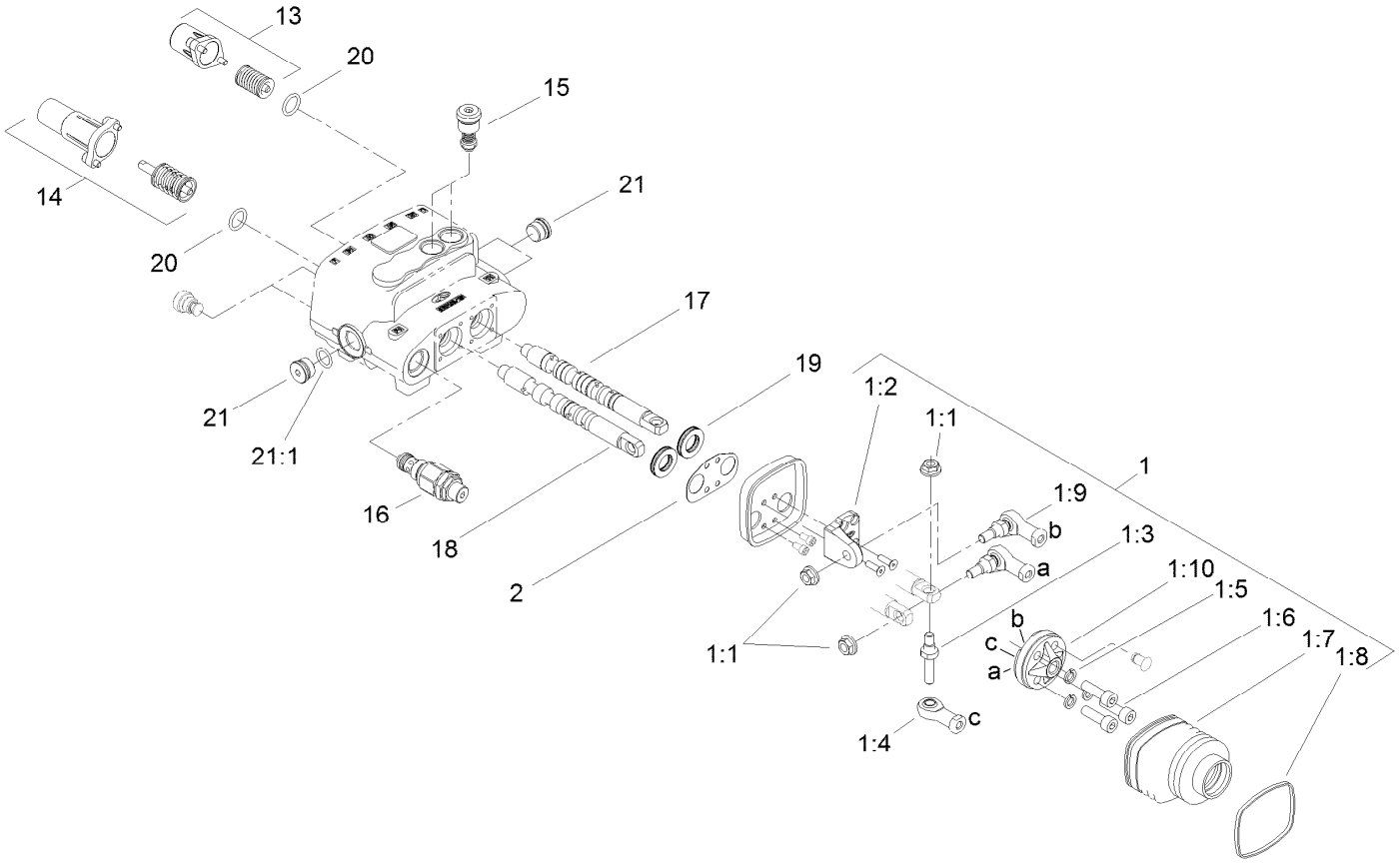

Two Spool Valve Assembly No. 106-9307 (continued)

Ref.	Part Number	Qty.	Description
1	106-7724	1	Joystick Kit
1:1	98-0668	3	Nut
1:2	106-7726	1	Pivot-Joystick
1:3	106-7727	1	Pin-Joystick
1:4	106-7728	1	End-Rod
1:5	42-9850	3	Washer-Lock, Spring
1:6	98-5828	3	Screw-HSH
1:7	106-7729	1	Bellow-Rubber
1:8	3290-379	1	Tie-Cable
1:9	106-7730	2	Joint-Joystick
1:10	106-7731	1	Holder-Articulated
2	106-7725	1	Seal-Joystick
13	106-7732	1	Valve Spring Kit
14	106-7733	1	Detent Spring Kit
15	106-7734	2	Valve-Relief
16	106-7735	1	Valve-Relief, Main
17	106-7736	1	Spool-Valve
18	106-7737	1	Spool-Valve
19	106-7738	2	Seal-Valve, Spool
20	106-7719	2	Seal-Valve
21	353-988	3	Plug-Hex
21:1	237-79	1	O-Ring

Hydraulic Pump Pulley Assembly

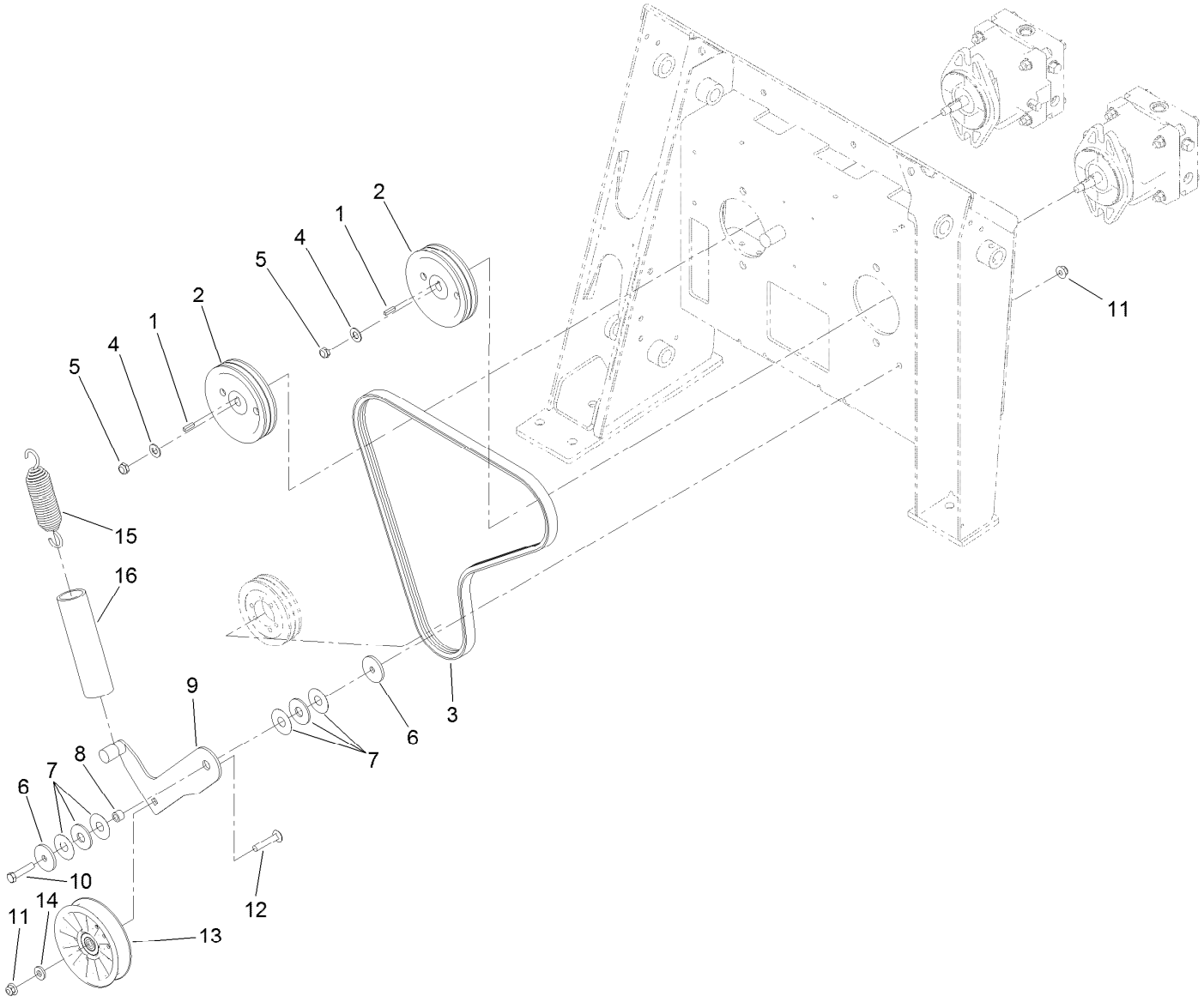

Hydraulic Pump Pulley Assembly (continued)

Ref.	Part Number	Qty.	Description
1	3-6168	2	Key
2	106-5710	2	Pulley-3V
3	95-3611	1	V-Belt
4	3256-25	2	Washer-Flat
5	3296-38	2	Nut-Lock, NI
6	115-1485	2	Washer-Plain
7	114-0463	2	Washer-Friction, Composite
8	115-4986	1	Spacer
9	115-1486	1	Arm-Idler
10	323-9	1	Screw-HH
11	104-8301	2	Nut-HF, NI
12	117-9971	1	Bolt-Carriage
13	119-2358	1	Pulley-Idler
14	43-0940	1	Spacer
15	105-0383	1	Spring-Extension
16	112-2409	1	Retainer-Spring

Track and Traction Assembly

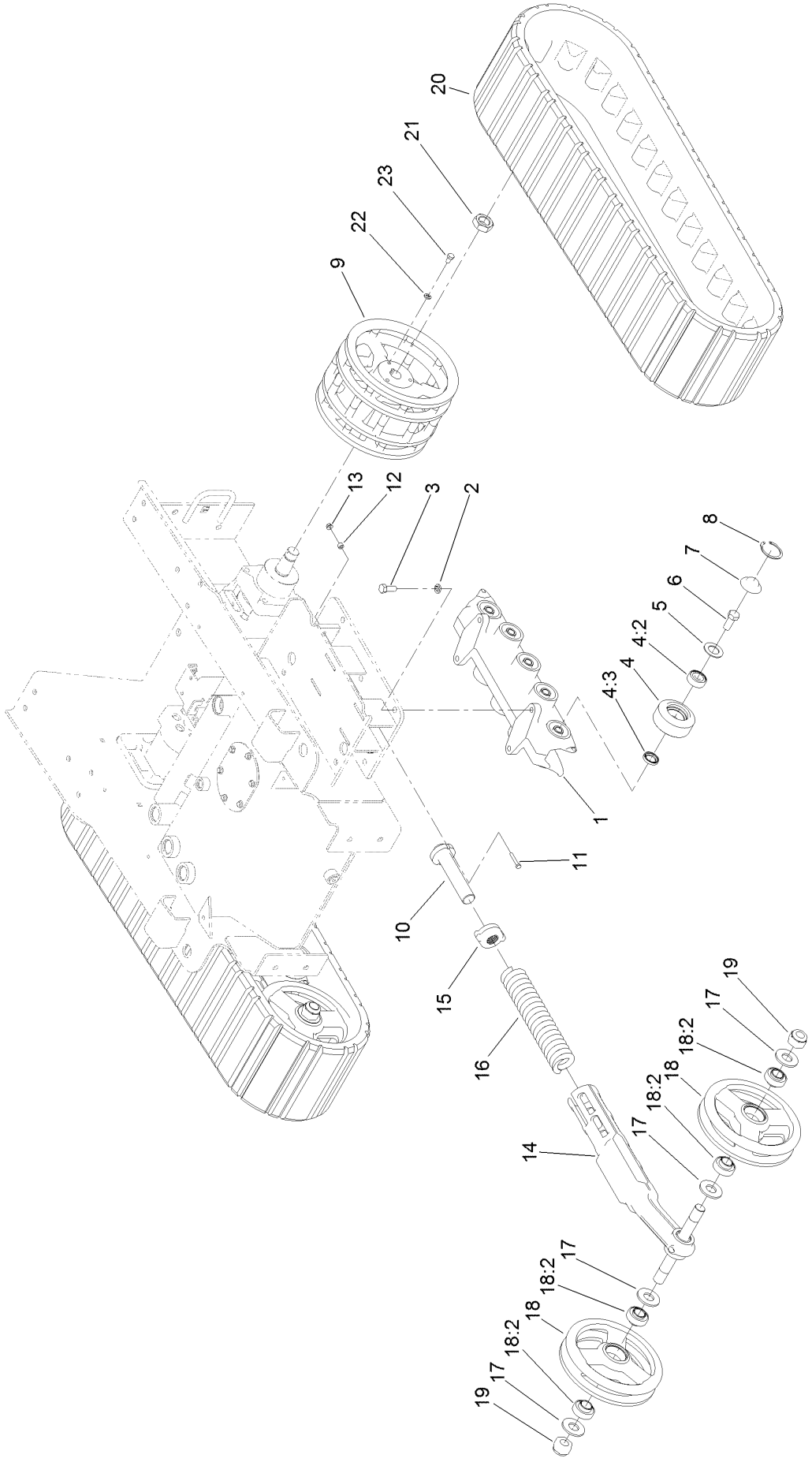

Track and Traction Assembly (continued)

Ref.	Part Number	Qty.	Description
1	117-1308-03	2	Guide-Track
2	3253-7	8	Washer-Lock
3	325-5	8	Screw-HH
4	106-7621	20	Road Wheel ASM
4:2	120-5378	1	Bearing-Ball
4:3	253-118	1	Seal-Oil
5	106-7585	20	Gasket-Bogie
6	327-4	20	Screw-HH
7	106-7557	20	Cap-Wheel, Bearing
8	106-7595	20	Ring-Snap, Internal
9	115-0721-03	2	Wheel-Drive
10	98-9846	2	Bolt-Tensioner
11	321-37	2	Screw-HH
12	98-4799	2	Spacer
13	32128-32	2	Nut-HHF
14	115-0717-03	2	Arm-Tensioner
15	108-4664	2	Block-Tensioner
16	95-3624	2	Spring-Compression
17	115-0722	8	Washer-Plain
18	104-6123	4	Tensioner Wheel ASM
18:2	104-6129	2	Bearing-Ball
19	104-2024	4	Nut-Hex, NI
20	136-5848	2	Track
21	107-9319	2	Nut-Hex
22	3253-21	6	Washer-Lock
23	323-34	6	Screw-HH

Control Panel Assembly

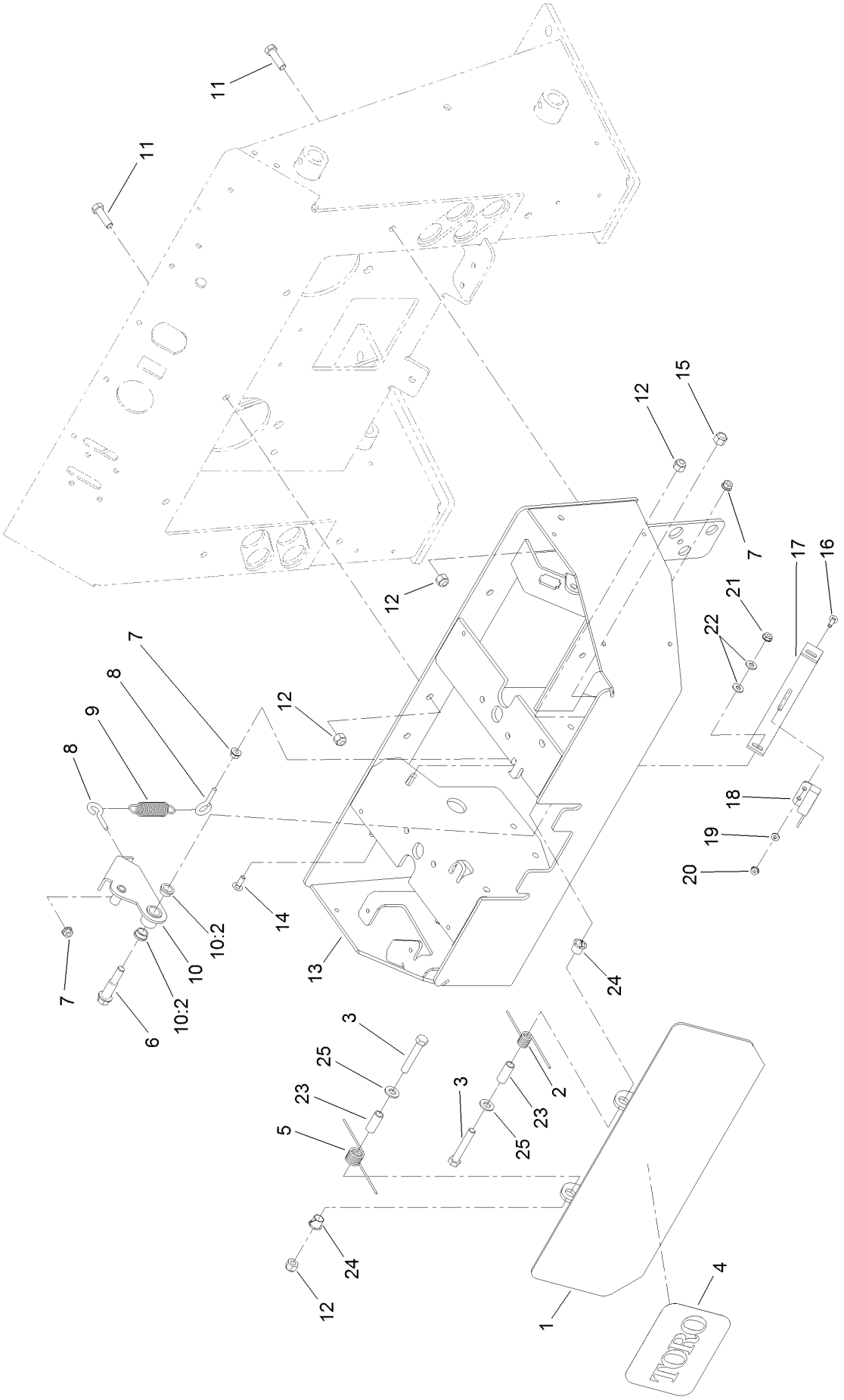

Control Panel Assembly (continued)

Ref.	Part Number	Qty.	Description
1	112-2786-03	1	Plate-Reverse
2	98-8425	1	Spring-Torsion, LH
3	323-11	2	Screw-HH
4	105-1217	1	Decal
5	98-8424	1	Spring-Torsion, RH
6	66-0560	1	Bolt-Shoulder
7	32128-32	4	Nut-HHF
8	71-2870	2	Bolt-Eye
9	108-4724	1	Spring-Extension
10	100-4203	1	Neutral Centering Lever ASM
10:2	256-156	2	Bushing-Flange
11	323-7	5	Screw-HH
12	3296-39	7	Nut-Lock, NI
13	110-0228-01	1	Panel-Control
14	3229-1	2	Screw-CARR
15	3296-6	1	Nut-Lock
16	3229-20	2	Screw-CARR
17	100-1263	1	Plate-Switch
18	100-1270	1	Switch-Proximity
19	3256-51	2	Washer-Flat
20	32149-7	2	Nut-Keps
21	32149-2	2	Nut-Keps
22	3256-22	4	Washer-Flat
23	114-1337	2	Spacer-Spring
24	256-257	2	Bushing-Nyliner
25	3256-24	2	Washer-Plain

Traction Control Assembly

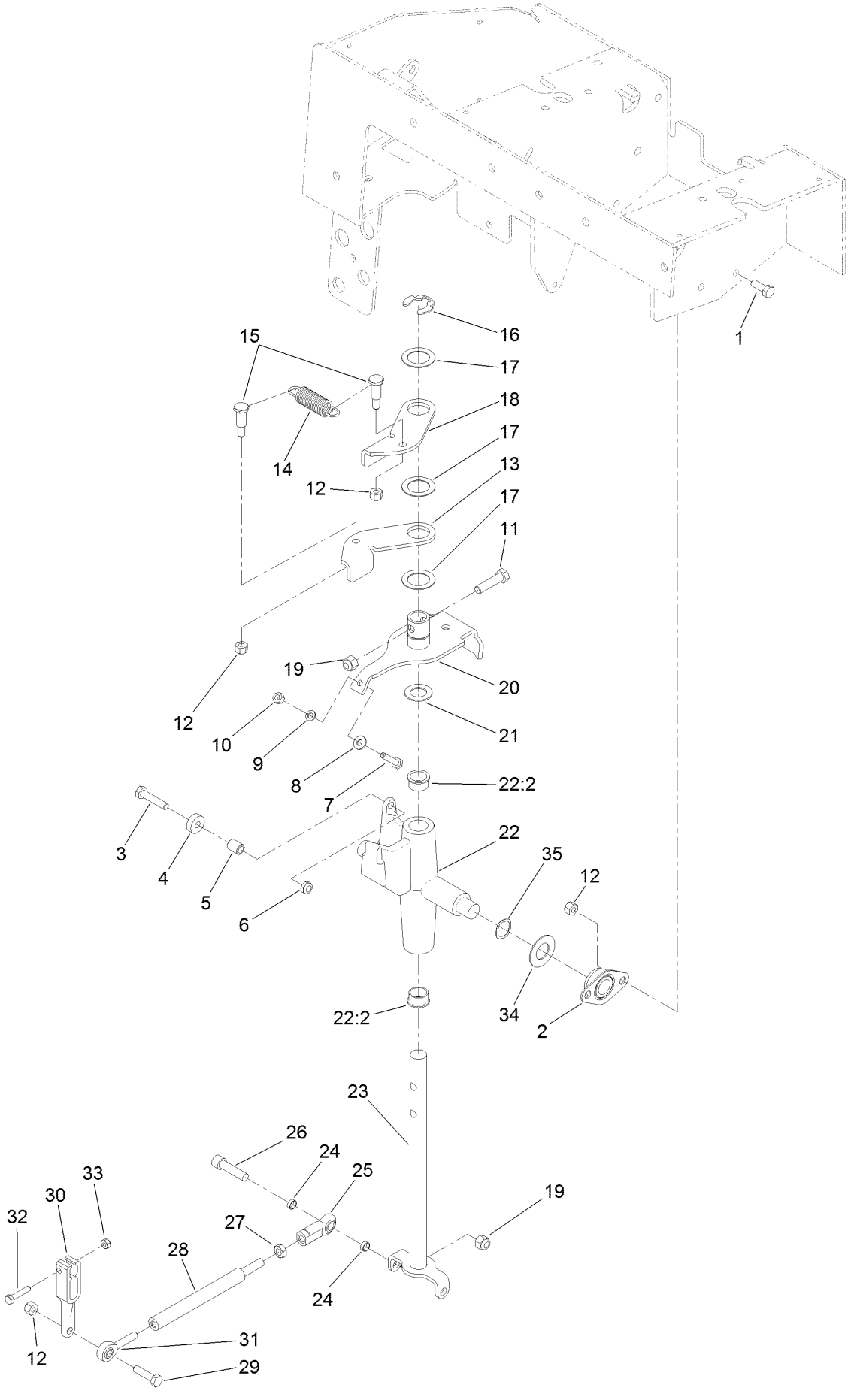

Traction Control Assembly (continued)

Ref.	Part Number	Qty.	Description
1	322-4	4	Screw-HH
2	27-2320	2	Bearing
3	322-7	1	Screw-HH
4	251-259	1	Bearing-Ball
5	88-7450	1	Spacer-Lever, Control
6	3296-47	1	Nut-Lock,NI
7	114-0282	1	Screw-HH
8	3256-22	1	Washer-Flat
9	3253-3	1	Washer-Lock
10	3217-5	1	Nut-Hex
11	323-8	1	Screw-HH
12	3296-29	8	Nut-Lock, NI
13	98-8407	1	Lever-Return, RH
14	108-4724	1	Spring-Extension
15	63-2650	2	Screw-Shoulder
16	32151-91	1	Ring-Retaining
17	108-9743	3	Washer-Plain
18	98-8408	1	Lever-Return, LH
19	3296-39	3	Nut-Lock, NI
20	112-2783	1	Lever-Pivot
21	257-8	1	Washer-Thrust
22	106-5737	1	Control Support ASM
22:2	256-252	2	Bearing-Flange
23	117-6335	1	Rod-Drive
24	117-9915	4	Spacer
25	103-1167	2	Joint-Ball End, LH
26	3274-2	2	Screw-HSH
27	3220-16	2	Nut-Hex Jam, LH
28	117-9900	2	Rod-Linkage
29	322-6	2	Screw-HH
30	117-3964-03	2	Arm-Control, Pump
31	117-9969	2	Bearing-Rod End, RH
32	33113-030	2	Screw-HH
33	33023-00	2	Nut-Lock
34	3256-39	2	Washer-Flat
35	95-3703	2	Washer-Spring, Wave

Control Handle and Reference Bar Assembly

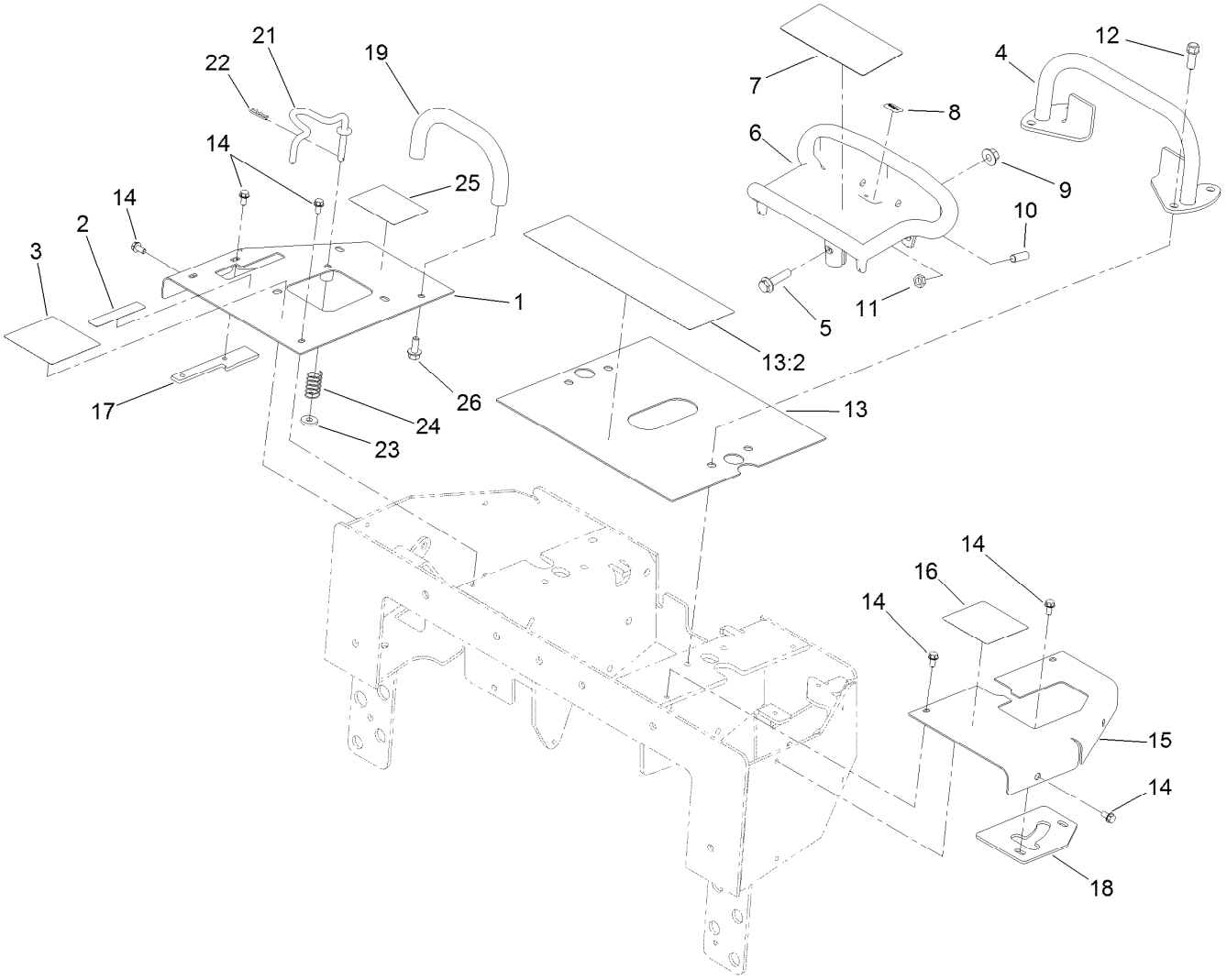

Control Handle and Reference Bar Assembly (continued)

Ref.	Part Number	Qty.	Description
1	115-4836-01	1	Panel-RH
2	115-4859	1	Decal-Brake
3	115-4857	1	Decal-Control, Loader
4	106-7715	1	Bar-Reference
5	3234-18	1	Screw-HHF
6	120-5380-03	1	Handle-Control
7	115-4020	1	Decal-Traction
8	98-1459	1	Decal
9	32128-43	1	Nut-Flange
10	3247-6	2	Screw-Set
11	3218-3	2	Nut-Jam
12	95-1726	4	Screw-Taptite
13	108-4643	1	Center Panel ASM
13:2	115-4860	1	Decal-Danger
14	9266714	11	Screw-HWH
15	112-2737-01	1	Panel-LH
16	115-4861	1	Decal-Control, Auxiliary
17	112-2691	1	Plate-Locking, Brake
18	112-2749-01	1	Plate-Stop
19	112-2620	1	Bar-Reference
21	115-4580	1	Rod-Interlock
22	3290-307	1	Pin-Cotter
23	88-7200	1	Washer-Flat
24	85-6750	1	Spring-Control
25	115-4862	1	Decal-Loader Lock
26	3234-5	2	Screw-HHF

Brake Handle and Bracket Assembly

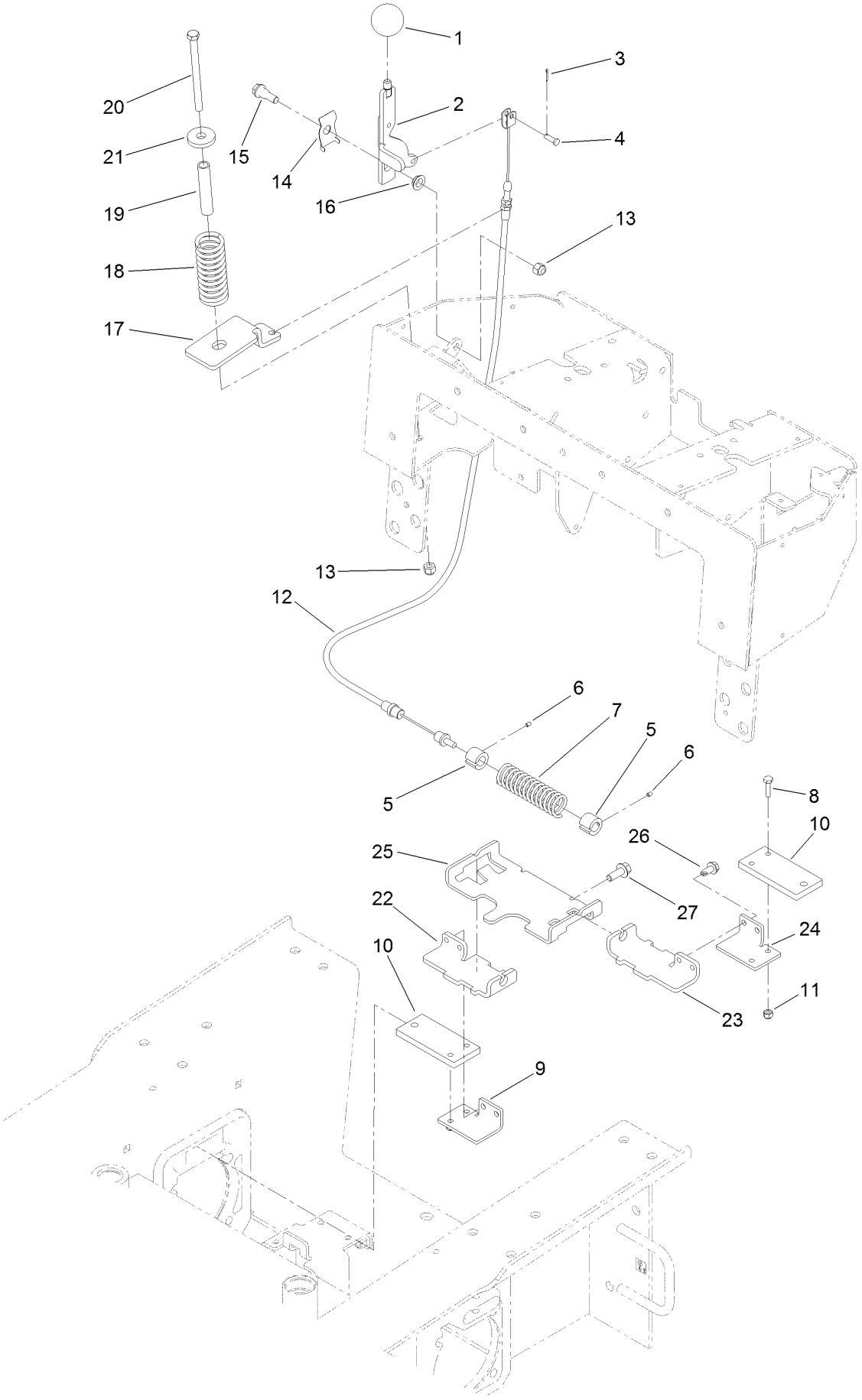

Brake Handle and Bracket Assembly (continued)

Ref.	Part Number	Qty.	Description
1	233-21	1	Knob
2	112-2694-03	1	Handle-Brake
3	3272-1	1	Pin-Cotter
4	283-67	1	Pin-Clevis
5	100-6274	2	Tube-Guide
6	3245-20	2	Screw-Set
7	100-1678	1	Spring
8	321-6	4	Screw-HH
9	112-2789-03	1	Bar-Link, Brake RH
10	112-2735-03	2	Plate-Brake
11	3296-42	4	Nut-Lock, NI
12	112-2791	1	Cable-Brake
13	3296-39	2	Nut-Lock, NI
14	112-2695	1	Spring-Leaf
15	94-6177	1	Bolt-Shoulder
16	93-2368	1	Bushing-Flange
17	115-4854-03	1	Bracket-Cable, Spring
18	114-1254	1	Spring-Compression
19	114-1255	1	Spacer-Spring
20	323-39	1	Screw-HH
21	98-0691	1	Washer-Hardened
22	112-2788-03	1	Bracket-Mounting, Brake RH
23	112-2733-03	1	Bracket-Mounting, Brake LH
24	112-2734-03	1	Bar-Link, Brake LH
25	110-0224-03	1	Support-Bar, Brake
26	32104-32	4	Screw-HWH
27	3234-11	2	Screw-HHF

Wire Harness, Temperature Sensor and Shield Assembly

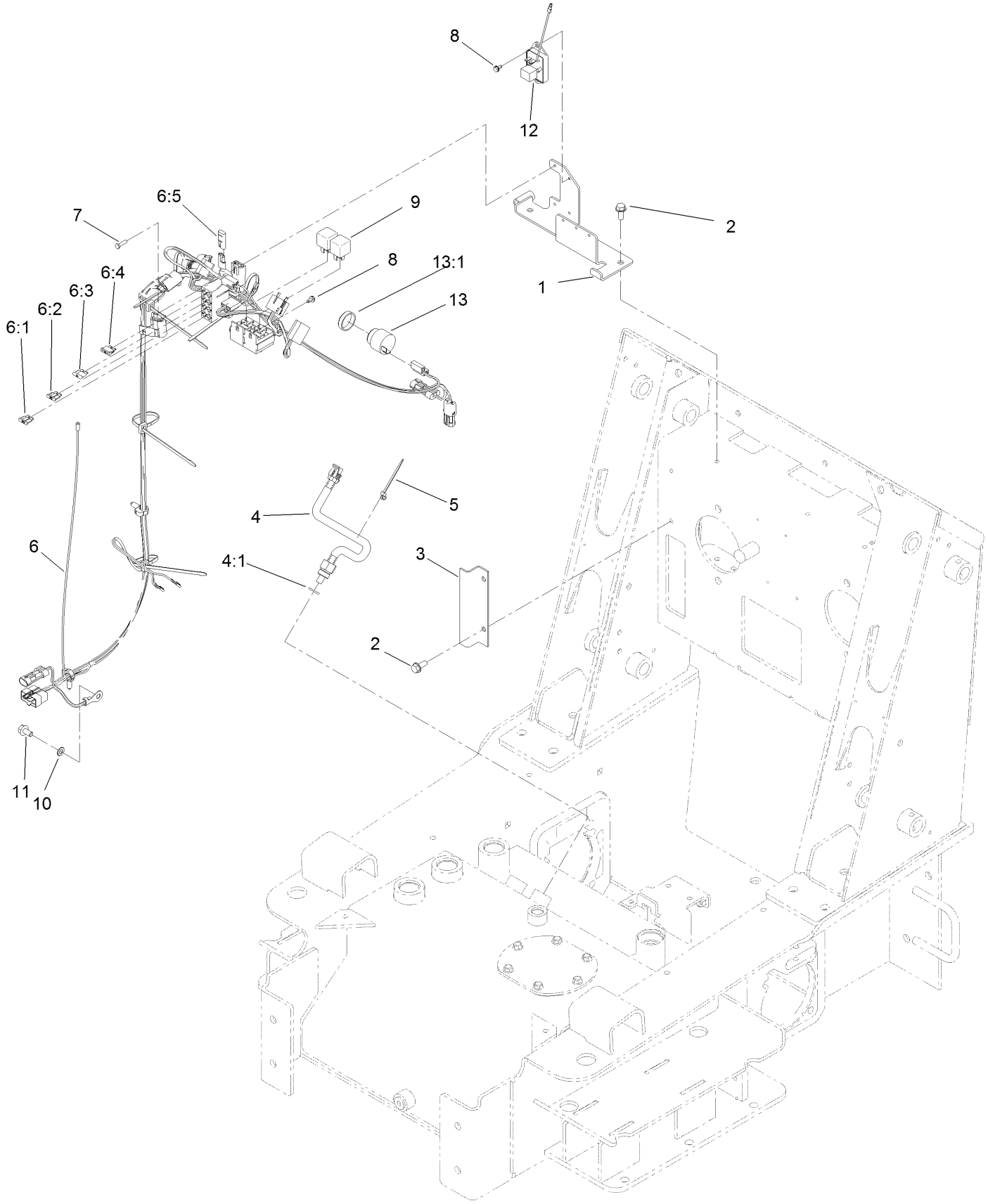

Wire Harness, Temperature Sensor and Shield Assembly (continued)

Ref.	Part Number	Qty.	Description
1	117-1735-03	1	Bracket-Fuse/Relay
2	32144-11	4	Screw-HWH
3	100-6117-03	1	Shield-Wiring
4	98-2765	1	Switch-Temperature
4:1	237-79	1	O-Ring
5	3290-381	3	Tie-Cable
6	117-1732	1	Harness-Wire
6:1	109103	1	Fuse-Blade, 30 Amp
6:2	109102	1	Fuse-Blade, 25 Amp
6:3	218-578	1	Fuse-Blade, 10 Amp
6:4	109355	2	Fuse-Blade, 15 Amp
6:5	116-0053	1	Cap-Plug
7	32104-4	2	Screw
8	104-2065	4	Screw-HWH
9	98-7249	2	Relay
10	3255-8	1	Washer-Lock
11	33104-016	1	Screw-HHF
12	99-7422	1	Module-Delay, Ignition
13	80-9330	1	Audio Alarm ASM
13:1	104-5107	1	Nut-Plastic, Knurled

Battery, Key Switch and Fuel Gauge Assembly

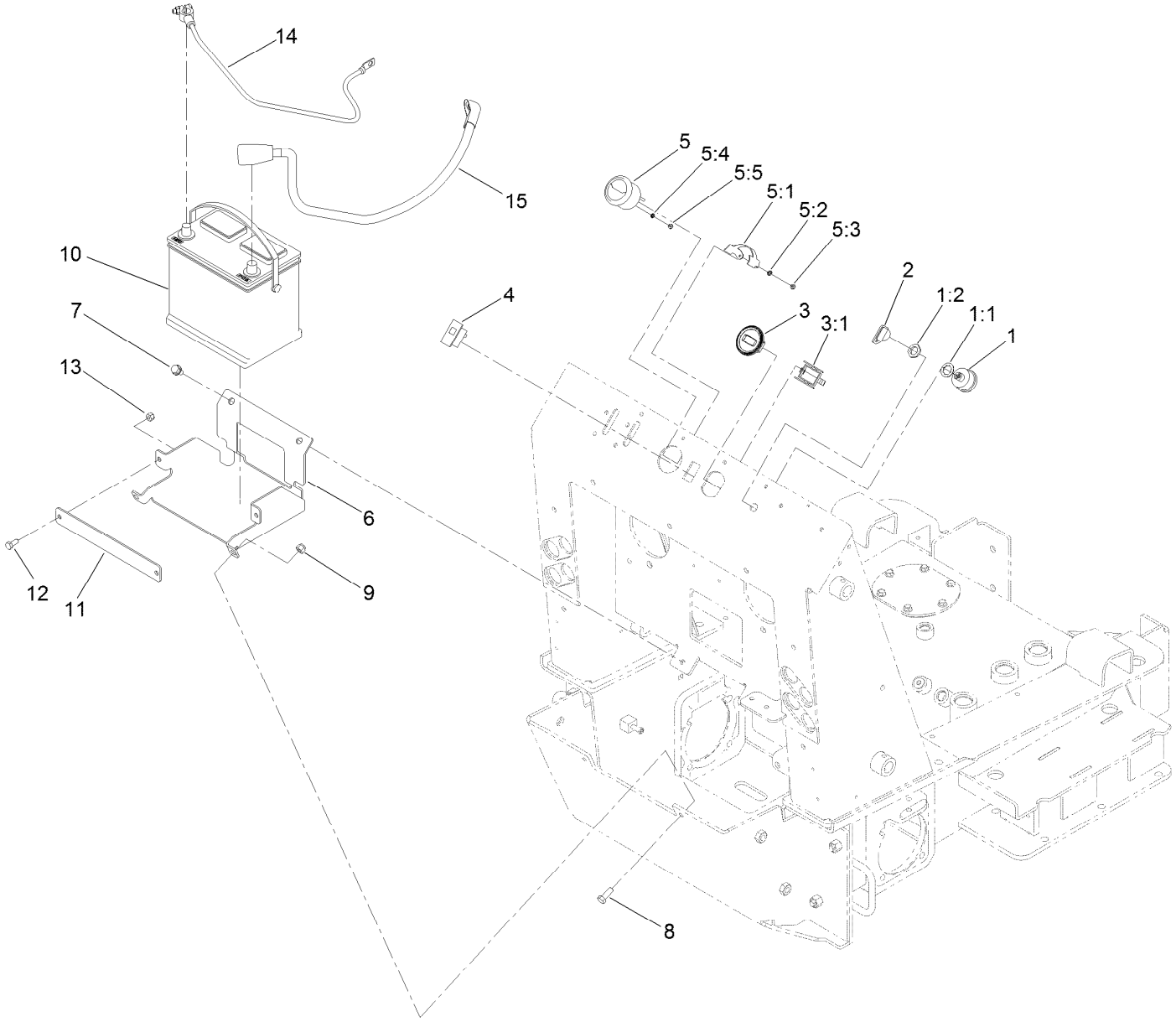

Battery, Key Switch and Fuel Gauge Assembly (continued)

Ref.	Part Number	Qty.	Description
1	88-9830	1	Key Switch ASM
1:1	3254-5	1	Washer-Lock
1:2	218-461	1	Nut-HH
2	63-8360	3	Key-Ignition
3	104-7427	1	Inductive Hourmeter ASM
3:1	104-4234	1	Clip-Mounting
4	104-2839	1	Light-Temp, Oil
5	66-2940	1	Gauge-Fuel
5:1	100-6147	1	Bracket-Mounting, Gauge
5:2	3254-1	2	Washer-Lock, Int
5:3	3217-27	2	Nut-Hex
5:4	3255-24	3	Washer-Lock / EXT
5:5	3217-16	3	Nut-Hex
6	106-9390-03	1	Tray-Mounting, Battery
7	32144-69	2	Screw-HWHTF
8	323-6	2	Screw-HH
9	3296-39	2	Nut-Lock, NI
10	104-9979	1	Battery
11	105-0371-03	1	Clamp-Battery
12	322-3	2	Screw-HH
13	3296-29	2	Nut-Lock, NI
14	106-5708	1	Cable-Battery, Negative
15	106-5707	1	Cable-Battery, Positive

Loader Arm Assembly

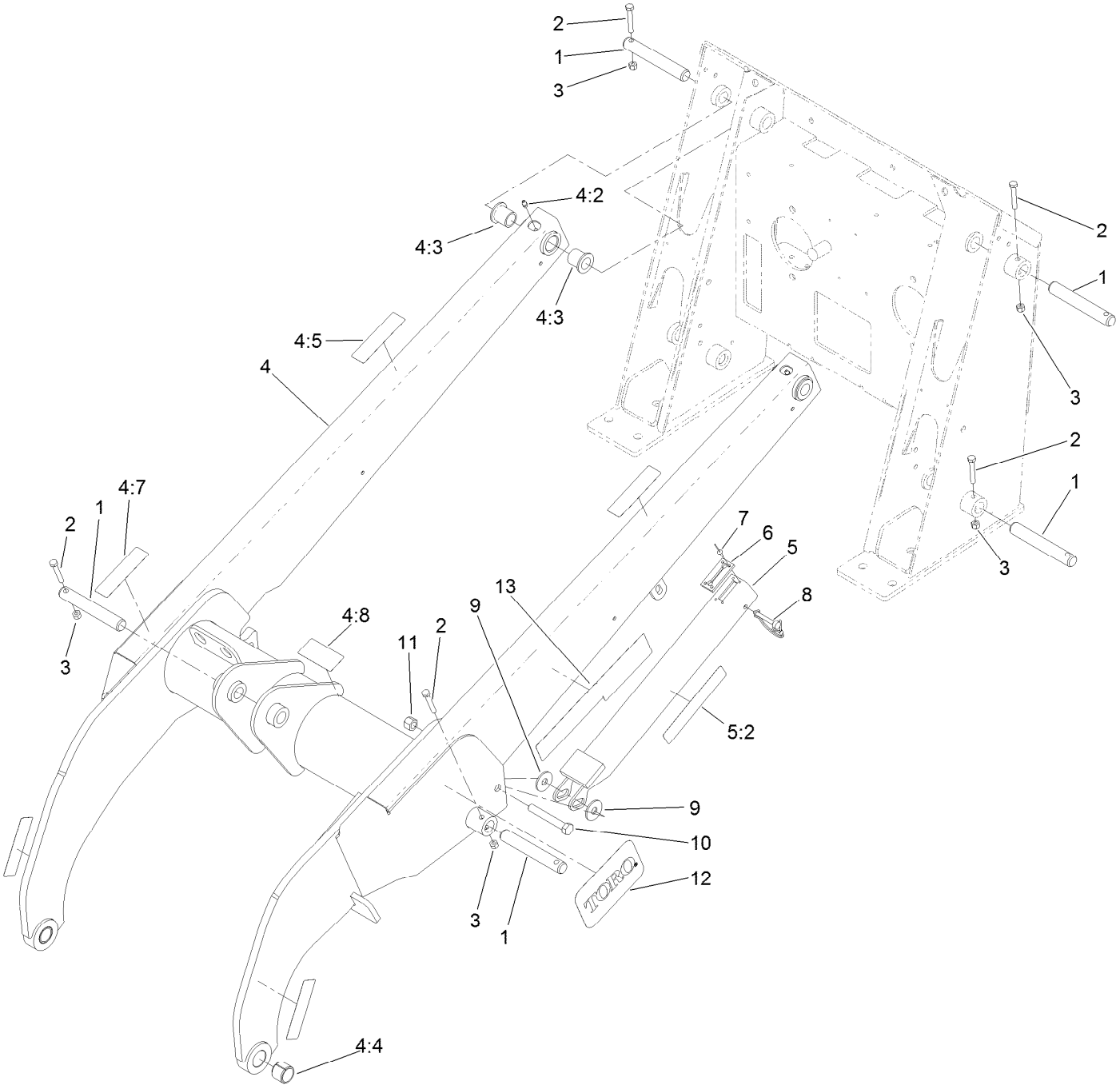

Loader Arm Assembly (continued)

Ref.	Part Number	Qty.	Description
1	104-2849	7	Pin-Locking
2	322-10	7	Screw-HH
3	3296-29	7	Nut-Lock, NI
4	108-4638	1	Loader Arm ASM
4:2	302-5	2	Fitting-Grease
4:3	95-3577	4	Bushing
4:4	98-4871	2	Bushing-Tension
4:5	100-8821	4	Decal-Warning, Pinch
4:7	115-4855	1	Decal-Caution
4:8	100-8822	1	Decal-No Rider
5	108-4639	1	Locking Arm ASM
5:2	115-4858	2	Decal-Danger
6	98-0083	1	Stop-Rubber
7	95-1687	4	Rivet
8	100-1663	1	Pin-Hitch
9	68-1440	2	Washer-Rubber
10	325-14	1	Screw-HH
11	3296-23	1	Nut-Lock, NI
12	105-1217	2	Decal
13	115-4867	2	Decal

Loader Arm Hydraulic Assembly

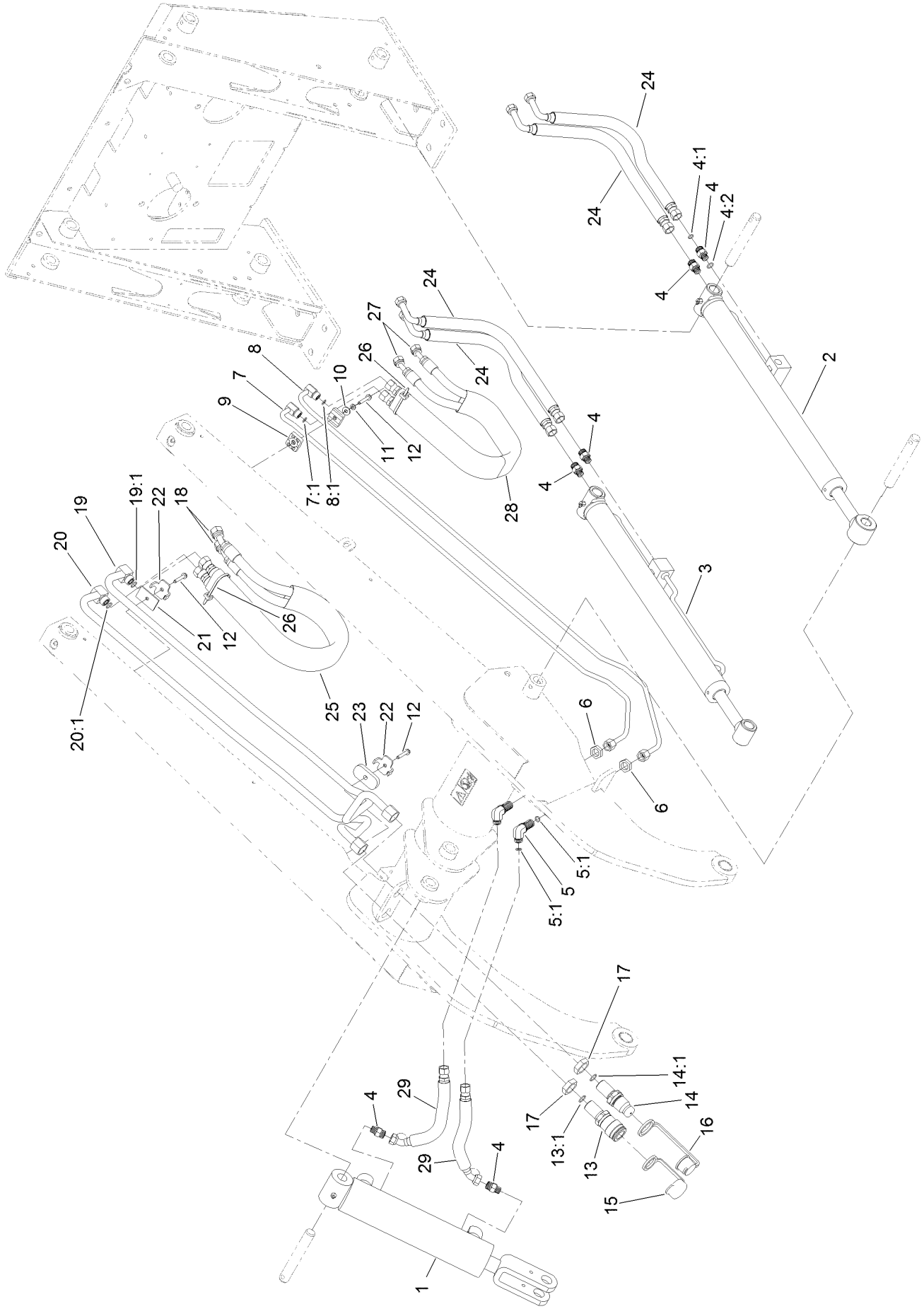

Loader Arm Hydraulic Assembly (continued)

Ref.	Part Number	Qty.	Description
1	139-0778	1	HYD CYL ASM
2	139-0776	1	LH HYD CYL ASM
3	139-0777	1	RH HYD CYL ASM
4	340-2	6	Fitting-Straight
4:1	237-22	1	O-Ring
4:2	237-42	1	O-Ring
5	340-154	2	Union-Bulkhead
5:1	237-22	2	O-Ring
6	340-70	2	Nut-Lock
7	106-9364	1	HYD Tube ASM
7:1	237-22	1	O-Ring
8	106-9365	1	HYD Tube ASM
8:1	237-22	1	O-Ring
9	56-7973	2	Clamp-Tube
10	3256-2	1	Washer-Flat
11	3253-3	1	Washer-Lock
12	94-2691	3	Screw-HWH Taptite
13	105-8394	1	Bulkhead Coupler ASM
13:1	237-65	1	O-Ring
14	105-8395	1	Bulkhead Nipple ASM
14:1	237-65	1	O-Ring
14:2	100-6120	1	Seal Kit ●
15	100-8816	1	Cap-Dust, Coupler
16	100-8815	1	Cap-Dust, Nipple
17	340-74	2	Nut-Lock, Bulkhead
18	98-0242	2	Hose-HYD
19	112-2563	1	HYD Tube ASM
19:1	237-30	1	O-Ring
20	108-6319	1	HYD Tube ASM
20:1	237-30	1	O-Ring
21	106-9366	1	Spacer-Hardline
22	98-0237	2	Plate-Clamp, Tube
23	112-2565	1	Plate-Hardline
24	98-0216	4	Hose-HYD
25	100-6128	1	Sleeve-Protective
26	3290-378	2	Tie-Cable
27	98-0213	2	Hose-HYD
28	100-6127	1	Sleeve-Protective
29	98-0207	2	Hose-HYD

● Not illustrated

Hydraulic Cylinder Assembly No. 139-0778

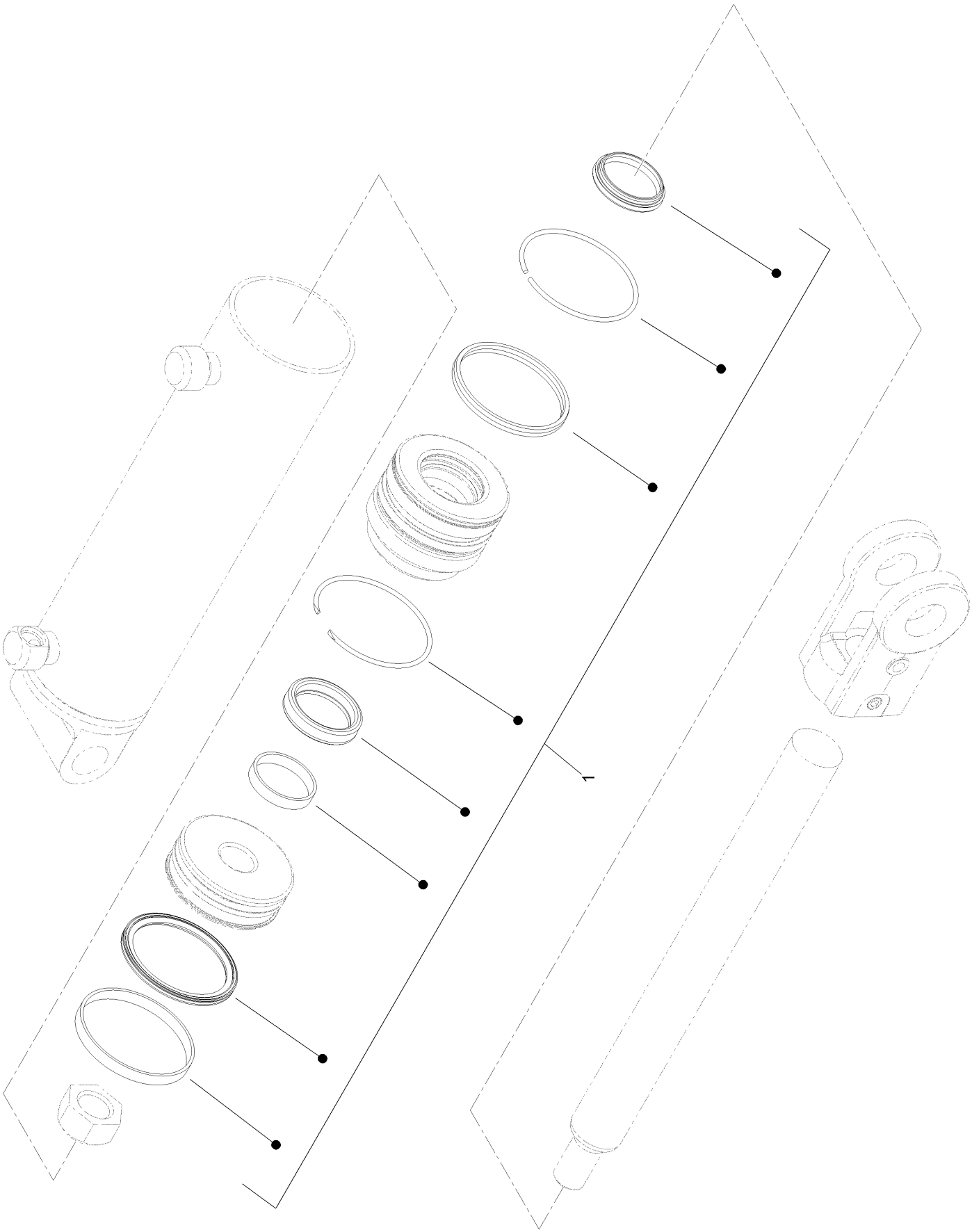

Hydraulic Cylinder Assembly No. 139-0778 (continued)

Ref.	*Part Number*	*Qty.*	*Description*
1	139-0808	1	Seal Kit

Hydraulic Cylinder Assembly No. 139-0776

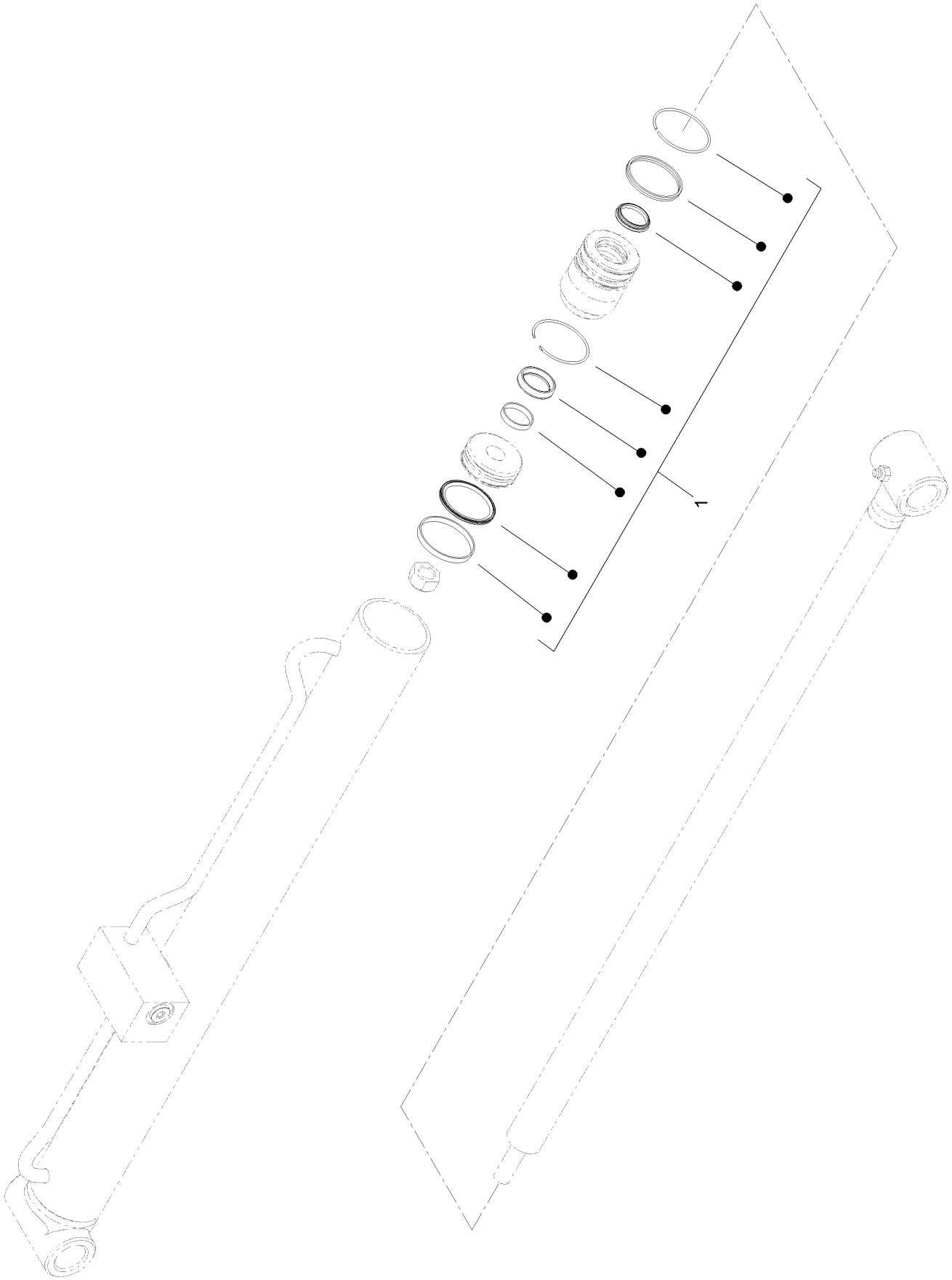

Hydraulic Cylinder Assembly No. 139-0776 (continued)

Ref.	*Part Number*	*Qty.*	*Description*
1	139-0807	1	Seal Kit

Hydraulic Cylinder Assembly No. 139-0777

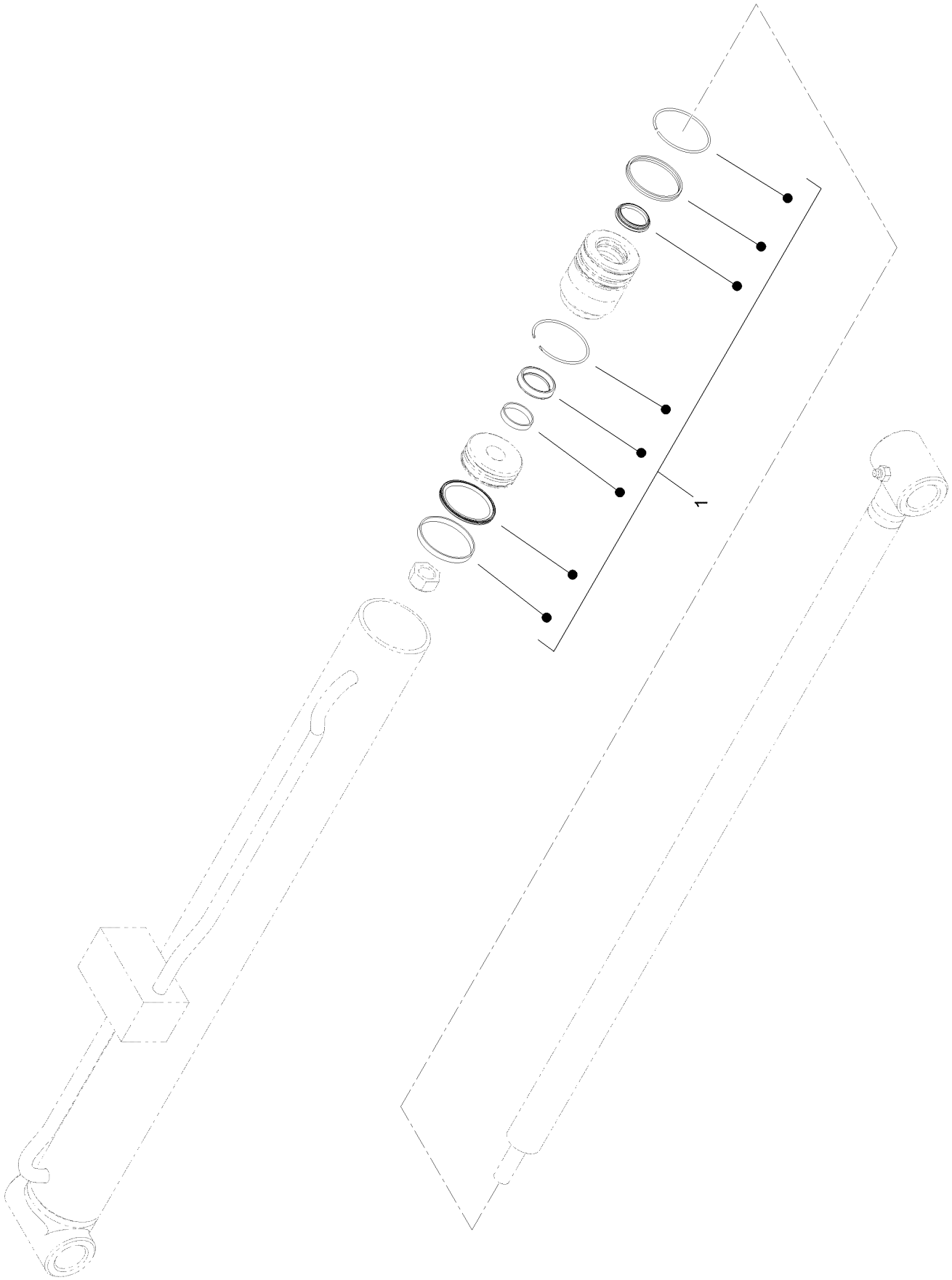

Hydraulic Cylinder Assembly No. 139-0777 (continued)

Ref.	*Part Number*	*Qty.*	*Description*
1	139-0807	1	Seal Kit

Quick Attach Assembly

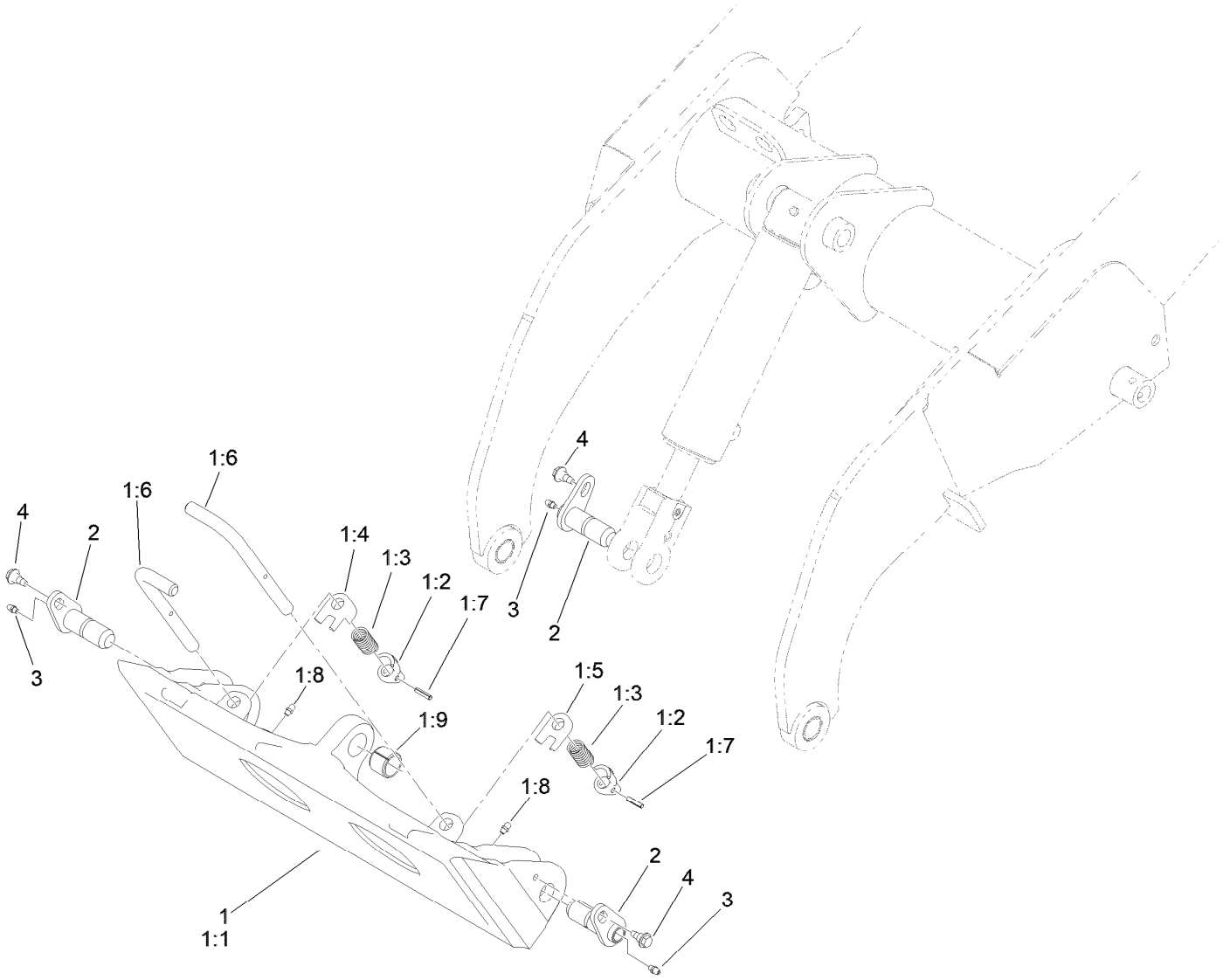

Quick Attach Assembly (continued)

Ref.	Part Number	Qty.	Description
1	132-8418	1	Quick Attach ASM
1:1	130-7708-03	1	Mount-Qtach
1:2	105-0246	2	Cam
1:3	98-4694	2	Spring-Compression
1:4	104-5909	1	Stop-RH
1:5	104-5903	1	Stop-LH
1:6	132-8419	2	Pin-Locking
1:7	3285-1	2	Pin-Grooved
1:8	302-5	2	Fitting-Grease
1:9	98-4871	1	Bushing-Tension
2	130-5222	3	Pin-Pivot
3	302-5	3	Fitting-Grease
4	99-5105	3	Screw-Shoulder

Heat Exchanger Assembly

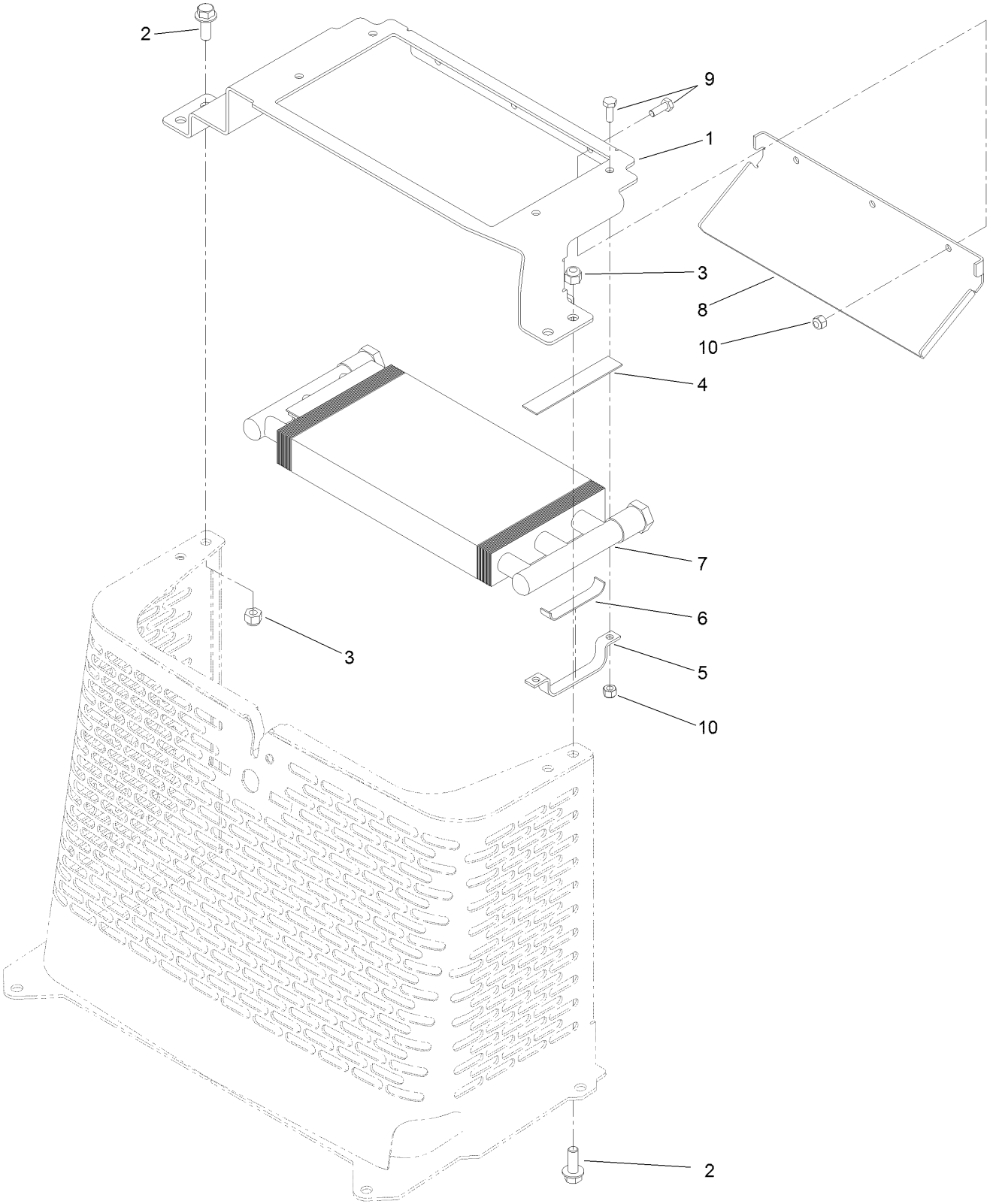

Heat Exchanger Assembly (continued)

Ref.	Part Number	Qty.	Description
1	120-5360-03	1	Bracket-Mounting, Cooler
2	3234-42	4	Screw-HHF
3	3296-39	4	Nut-Lock, NI
4	94-9566	2	Pad-Footrest
5	104-2803	2	Support-Cooler
6	104-2816	2	Pad-Support
7	105-0352	1	Exchanger-Heat
8	115-0798-03	1	Deflector-Cooler
9	321-4	7	Screw-HH
10	3296-42	7	Nut-Lock, NI

Hood and Fan Assembly

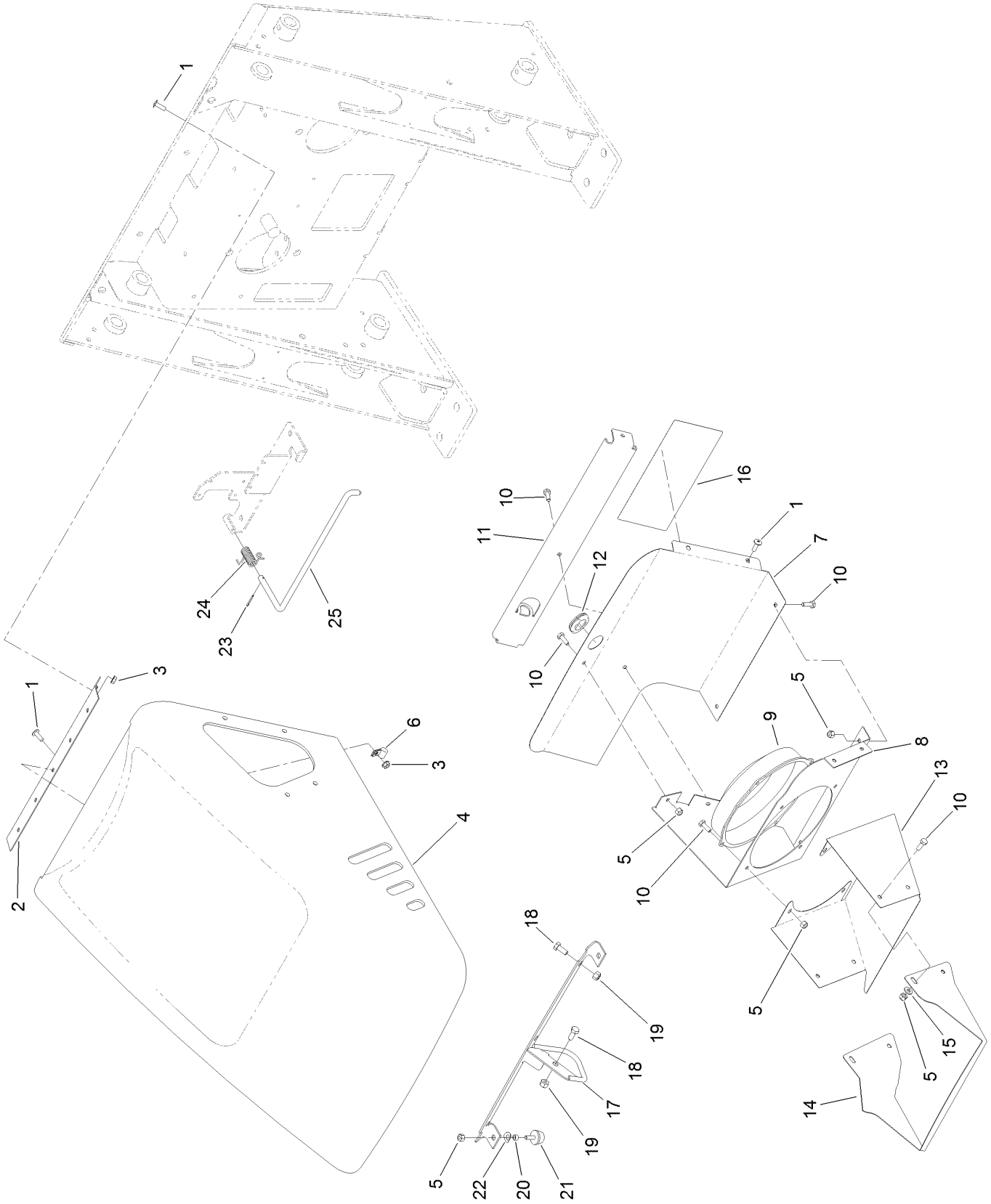

Hood and Fan Assembly (continued)

Ref.	Part Number	Qty.	Description
1	9114604	14	Screw-Head, Truss
2	100-1284	1	Hinge-Hood
3	32128-33	6	Nut-HF
4	114-1363	1	Hood
5	3296-42	22	Nut-Lock, NI
6	2412-91	2	Clamp
7	114-8715-03	1	Bracket-Fan, Back
8	114-8714-03	1	Bracket-Fan, Back
9	104-2809	1	Fan
10	321-4	12	Screw-HH
11	115-4849-03	1	Bracket-Support, Hood
12	240-5	1	Grommet
13	114-8711-03	1	Shroud-Fan
14	114-8712-03	1	Shroud-Fan, Front
15	3256-22	2	Washer-Flat
16	132-8632	1	Decal-Service
16	136-5759	1	Decal-Service, French
16	136-5760	1	Decal-Service, German
16	136-5761	1	Decal-Service, Spanish
16	136-5762	1	Decal-Service, Italian
16	136-5763	1	Decal-Service, Dutch
16	136-5764	1	Decal-Service, Polish
16	136-5765	1	Decal-Service, Russian
16	136-5766	1	Decal-Service, Slovakian
17	117-1725-03	1	Latch-Rod
18	322-3	4	Screw-HH
19	3296-29	4	Nut-Lock, NI
20	106-9308	2	Spacer
21	1-523420	2	Bumper
22	121-4605	2	Washer-Spring
23	3272-6	1	Pin-Cotter
24	106-2584	1	Spring-Torsion
25	106-2554	1	Rod-Support, Hood

Attachments and Accessories

For 22322 — TX 427 Wide Track Compact Tool Carrier

Product Name	Model/Part
Light Kit	100-8840
Road Wheel Kit	106-7620
Reference Guide Kit	107-9310
Track-Aggressive Tread, Wide	108-9749
4 Cubic Foot Standard Bucket	22409
Loose Materials Bucket	22410
48in Hydraulic Blade	22414
Rotary Broom	22415
Bore Drive Head	22420
Rod and Reamer	22421
Multi-Purpose Tool	22423
Power Box Rake	22425
Stump Grinder	22429
Tree Forks	22438
Cement Bowl	22442
40in Tiller	22445
Snowthrower	22456
Crumber Kit	22464
Trench Filler	22472
High-Torque Trencher Head	22473
High-Speed Trencher Head	22474
TX Platform	22475
Narrow Bucket	22520
Grapple Rake	22521
Auger Head	22805
Universal Swivel Auger Head	22806
Vibratory Plow	22911
Soil Cultivator	23101
Concrete Breaker	23135
Backhoe Fitup Kit	23162
Backhoe	23163
Adjustable Forks	23164
Leveler	23165
Spark Arrestor Screen	75-6880

Notes:

Notes:

Notes:



Count on it.