Form No. 3327–539 Rev A

TORO®

Versa Vac

Model No. 07053—Serial No. 220000001 and Up

Operator’s Manual

Contents

Introduction 2
Safety 3
- Before Operating 3
- While Operating 3
- Maintenance 4
- Safety and Instruction Decals 5

Specifications 8
- General Specifications 8
- Optional Equipment 9

Setup 10
- Ballast Requirements 10
- Mount Versa Vac to Tractor 10
- Adjusting the PTO Shaft Length 11
- Connecting the PTO Shaft 11
- Removing the Versa Vac from the Tractor 12
- Greasing the Machine 12

Before Operating 13
- Check Hydraulic Fluid 13
- Check Tire Pressure 13
- Check Torque Of Wheel Nuts 13

Operation 14
- Controls 14
- Tractor Hydraulics 14
- Operating Tips 14
- Transporting the Equipment 14
- Manual Door Operation 15
- Inspection And Cleanup After Operation 16
- Hand Held Remote Vacuum Hose Kit 16

Maintenance 17
- Greasing the Versa Vac 17
- Changing Hydraulic Oil 17
- Replacing Hydraulic Filter 17
- Checking Hydraulic Lines And Hoses 18
- Adjusting the Impeller Belt 18

Storage 19
- Hydraulic Schematic 19

The Toro General Commercial Products Warranty . . 20

Introduction

Read this manual carefully to learn how to operate and maintain your product properly. The information in this manual can help you and others avoid injury and product damage. Although Toro designs and produces safe products, you are responsible for operating the product properly and safely.

Whenever you need service, genuine Toro parts, or additional information, contact an Authorized Service Dealer or Toro Customer Service and have the model and serial numbers of your product ready. The two numbers are stamped on a plate which is located on the frame.

Write the product model and serial numbers in the space below:

Model No. _____

Serial No. _____

This manual identifies potential hazards and has special safety messages that help you and others avoid personal injury and even death. ***Danger***, ***Warning***, and ***Caution*** are signal words used to identify the level of hazard. However, regardless of the hazard, be extremely careful.

Danger signals an extreme hazard that *will* cause serious injury or death if you do not follow the recommended precautions.

Warning signals a hazard that *may* cause serious injury or death if you do not follow the recommended precautions.

Caution signals a hazard that may cause minor or moderate injury if you do not follow the recommended precautions.

This manual uses two other words to highlight information. **Important** calls attention to special mechanical information and **Note:** emphasizes general information worthy of special attention.

© 2001 by The Toro Company

8111 Lyndale Avenue South
Bloomington, MN 55420-1196

All Rights Reserved

Printed in the USA

Safety

Hazard control and accident prevention are dependent upon the awareness, concern, and proper training of the personnel involved in the operation, transport, maintenance, and storage of the machine. Improper use or maintenance of the machine can result in injury or death. To reduce the potential for injury or death, comply with the following safety instructions.

Before Operating

- Since the Versa Vac must be towed to operate, it is extremely important that the tow tractor be carefully selected to assure the best performance and safe operation.
- The tow tractor must have the proper wheel base and tread width and be equipped with a roll bar and seat belt to operate safely on hilly terrain. The normal operating speed is 6 mph but will vary with terrain and debris being picked up. The maximum transport speed is 15 mph with slower speeds required on hilly terrain. Refer to tractor Operator's Manual for information or tractor service agency if you have any questions on safe operation.
- The brakes of the tow tractor must have the capacity to stop the Versa Vac with trailer fully loaded and traveling at the maximum recommended transport speed.
- The power take–off drive of the Versa Vac requires a tractor with operating speeds of 540 rpm and output power of 32 hp or higher. Do not exceed the 540 rpm speed.
- The Versa Vac must comply with local road requirements, if transported on public roads. A Slow–moving vehicle sign has been provided. Signal lights and brakes are not provided and may be required in some areas.
- Read and understand the contents of this Operator's Manual before operating the machine. Become familiar with all of the controls and know how to stop quickly. A free replacement manual is available by sending the complete Model and Serial Number to The Toro Company, 8111 Lyndale Avenue South, Bloomington, Minnesota 55420-1196.
- Never allow children to operate the machine. Do not allow adults to operate machine without proper instruction. Only trained operators who have read this manual should operate this machine.
- Never operate the machine when under the influence of drugs or alcohol.
- Keep all bystanders away from the operating area.
- Keep all shields and safety devices in place. If a shield, safety device, or decal is illegible or damaged, repair or replace it before operation is commenced. Also tighten any loose nuts, bolts, and screws to ensure that the machine is in safe operating condition.
- Do not operate the machine while wearing sandals, tennis shoes, sneakers, or shorts. Also, do not wear loose fitting clothing which could get caught in moving parts. Always wear long pants and substantial shoes. Wearing safety glasses, safety shoes, and a helmet is advisable and required by some local ordinances and insurance regulations.

While Operating

- This product may exceed noise levels of 85 dB(A) at the operator position. Hearing protection is recommended for prolonged exposure to reduce the potential of permanent hearing damage.
- Using the machine demands attention. To prevent loss of control:
  - Operate only in daylight or when there is good artificial light.
  - Drive slowly and watch for holes or other hidden hazards.
  - Do not drive close to a sand trap, ditch, creek, embankment or other hazard.
  - Reduce your speed when making sharp turns and when turning on hillsides.
  - Avoid sudden starts and stops.
  - Before backing up, look to the rear and ensure that no one is behind the machine.
  - Watch out for traffic when near or crossing roads. Always yield the right-of-way.
- The brush, rubber fingers, flail, and vacuum of the Versa Vac pick up and propel debris and small objects in its path during operation. Always wear eye and head protection to avoid possible injury from flying objects, and keep children, pets, and bystanders well away from the area of operation.
- Never carry passengers on tractor or allow anyone to ride in trailer.
- Do not step over PTO. shaft to get to other side of machine. Walk around trailer.
- Never get on or off tractor with PTO. shaft engaged.
- Always keep bystanders to the extreme right or left side of trailer when opening rear door.
- Park on a level surface, empty trailer and block wheels before removing Versa Vac from prime mover.

- If the engine stalls or the machine loses headway and cannot make it to the top of a slope, do not turn the machine around. Always back slowly straight down the slope.
- **Do not take an injury risk!** When a person or pet appears unexpectedly in or near the operating area, **stop operation**. Careless operation, combined with terrain angles, ricochets, or improperly positioned guards can lead to thrown object injuries. Do not resume operation until the area is cleared.

While Dumping

- Moving trailer door and dumping debris can cause serious injury. Stay clear of trailer while machine is backing up or dumping.
- Keep bystanders a safe distance from trailer when operating to dump debris or when opening and closing trailer door.
- Under rare circumstances wet, compressed grass clippings may generate heat. Always empty the trailer before storing the unit.
- Raising and lowering of trailer door could cause injury to bystanders or pets. Keep bystanders and pets a safe distance from trailer when operating to dump debris when opening and closing trailer door.
- To avoid the risk of electrical shock, dump trailer only in area clear of overhead wires and other obstructions.
- **NEVER** dump trailer on a slope, Always dump trailer on level ground.

Maintenance

- Remove the key from the ignition switch to prevent accidental starting of the engine when servicing, adjusting, or storing the machine.
- Perform only those maintenance instructions described in this manual. If major repairs are ever needed or assistance is desired, contact an Authorized Toro Distributor.
- Be sure that the machine is in safe operating condition by keeping nuts, bolts, and screws tight. Check all bolts and nuts frequently to be sure that they are tightened to specification.
- To ensure optimum performance and safety, always purchase genuine Toro replacement parts and accessories to keep the machine all Toro. **Never use "will-fit" replacement parts and accessories made by other manufacturers.** Look for the Toro logo to ensure genuineness. Using unapproved replacement parts and accessories could void the warranty.

Safety and Instruction Decals

Safety decals and instructions are easily visible to the operator and are located near any area of potential danger. Replace any decal that is damaged or lost.

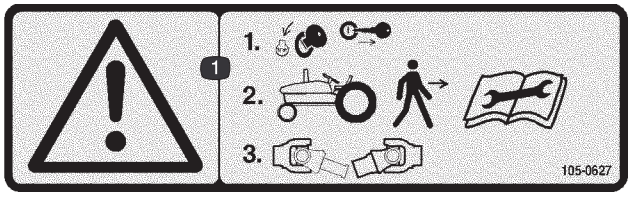

105-0627

1. Warning—stop the engine and remove the ignition key before getting off of the tractor; read the instructions before servicing or performing maintenance, then disconnect the PTO shaft.

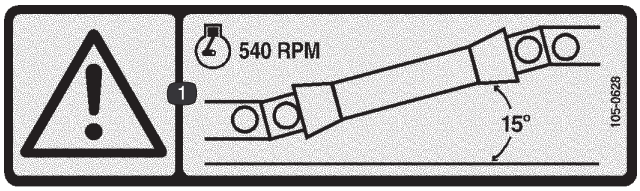

105-0628

1. Warning—run the engine at no more than 540 RPM and keep the PTO shaft angle under 15 degrees.

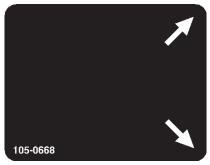

105-0668



105-0669

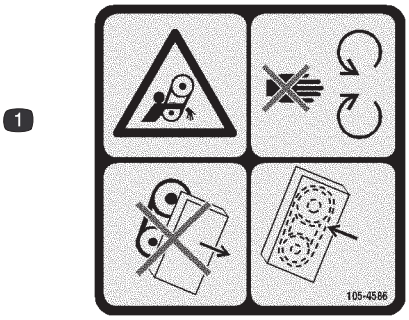

105-4586

1. Entanglement hazard, belt—stay away from moving parts. Do not operate the machine with the shields or guards removed; keep the shields and guards in place.

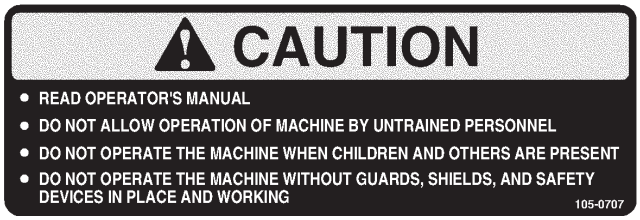

105-0707

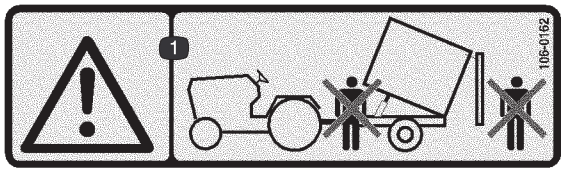

106-0162

1. Warning—do not stand in front of or behind the trailer when dumping.

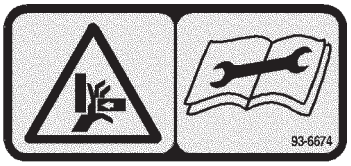

93-6674

1. Crushing hazard, hand—read the instructions before servicing or performing maintenance.



105-4587

1. Warning—read the *Operator's Manual* and receive training.
2. Warning—wear hearing protection.
3. Thrown object hazard—wear eye protection and stay a safe distance from the machine.
4. Cutting hazard of hand or foot—wait for moving parts to stop.

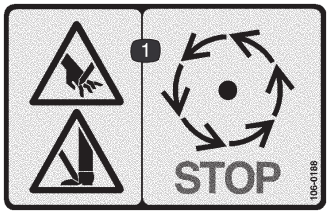

106-0188

1. Cutting hazard of hand or foot—wait for moving parts to stop.



106-0163

1. Warning—read the *Operator's Manual* and receive training. The maximum load is 1350 lb. (612 kg) trailer weight and 850 lb (385 kg) tongue weight. Do not drive the machine and trailer down hill or you may lose control.
2. Crushing hazard, trailer—do not carry passengers.
3. Warning—do not exceed 15 mph (24 kmh).
4. Stored energy hazard, trailer—do not disconnect the trailer without first putting down the jack.



106-0177



106-0178

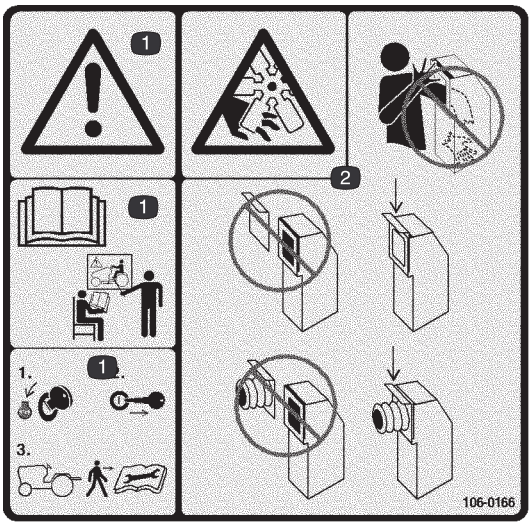

106-0166

1. Warning—read the *Operator's Manual* and receive training. Stop the engine and remove the ignition key before getting off of the tractor; read the instructions before servicing or performing maintenance.
2. Cutting/dismemberment hazard, fan—do not place your hand or arm in the vacuum chute; keep the hose door or hose installed at all times.

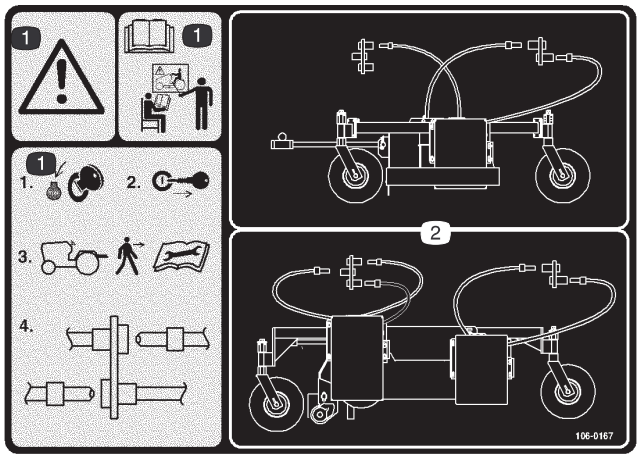

106-0167

1. Warning—read the *Operator's Manual* and receive training. Stop the engine and remove the ignition key before getting off of the tractor; read the instructions before servicing or performing maintenance, then connect or disconnect the hydraulic hoses.
2. Hydraulic hose routing and connections

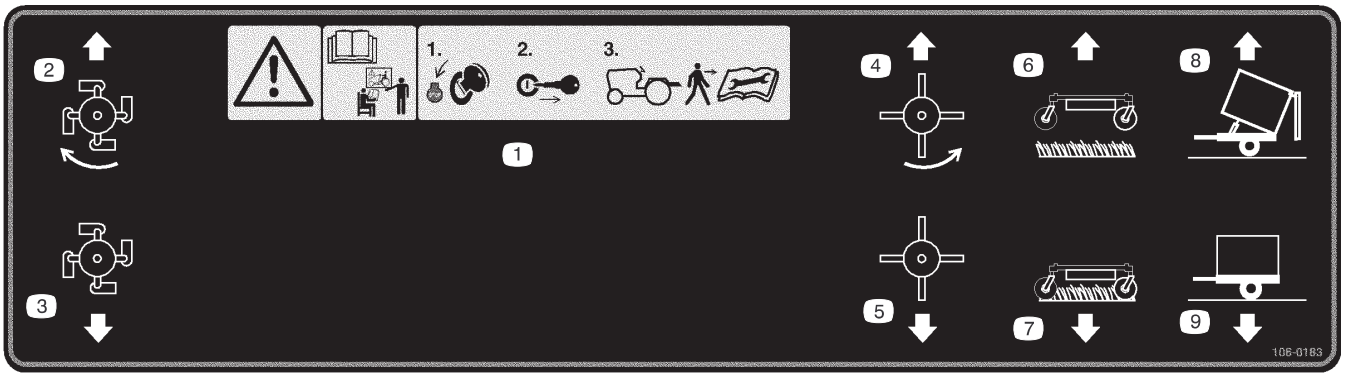

106-0183

1. Warning—read the *Operator's Manual* and receive training. Stop the engine and remove the ignition key before getting off of the tractor; read the instructions before servicing or performing maintenance
2. Flail on
3. Flail off
4. Rubber fingers on
5. Rubber fingers off
6. Vacuum unit up
7. Vacuum unit down
8. Trailer dump
9. Trailer upright

Specifications

General Specifications

General Description	The Versa Vac is a multi–function turf sweeper and debris Vac maintenance machine for large turf areas. It is capable of performing turf sweep functions as well as dethatching and clean up in a one pass operation. The machine is composed of a vacuum system, a dump trailer for debris collection, as well as interchangeable decks for different turf operations.
Main Frame	One piece welded frame of 1/4 inch, 7 and 10 gauge formed steel
Hitch	Pin type, 3/4 diameter; adjustable vertical height for tractor hitches.
Suspension	3500 lb., Torflex Axle
Pay Load	1500 lb. ± 250
Wheels and Tires	Stamped and welded steel wheels rated up to 1800 lb. Turf tire, size: 24 x 13.00–nhs 4 ply
Dump Trailer	Volume 6 1/3 cubic yard. Self–cleaning tapered box. Dump trailer is operated hydraulically by one control, with self opening and closing door. Dump trailer hydraulically lifted with a 3 x 18 hydraulic cylinder Vented roof sections with dust hoods to direct dust away from operator.
Self Contained Hydraulic System	Dual hydraulic circuits (5.5 / 11 gpm) Two section gear pump (.45 cu in. / .9 cu in.), operates @ 2850 rpm's ± 50 rpm's @ 540 PTO in put Two cylinder functions (deck lift / box dump). Two motor functions (finger and flail rotors) Single spool open center control for flail rotor (11 gpm circuit) Three spool open center control for two cylinder functions and finger rotor control (5.5 gpm circuit) 13 gal hydraulic reservoir. Quick couplers for deck connections Return line oil filtration In line suction strainer Sight glass fluid level indicator and thermometer
Vacuum Impeller	32 inch ± .5 inch diameter impeller 8 blades reinforced 1/4 inch steel, 9 3/8 inch wide (radial design) welded to a 27 inch diameter base plate. Impeller hub mounted to shaft with two 1/2 inch spiral pins Weight 109.5 lbs. ± 2 lbs. 1100 rpm ± 20 rpm @ 540 PTO input 6800 cfm ± 200 cfm @ 540 PTO input in open atmosphere (with the deck up)
Impeller Housing	10 gauge steel front and rear panels with louvers for band location Rolled 10 gauge abrasive resistant steel band with increasing radius from cut off point 10 x 10 inch exhaust opening Inside housing clearance 10 inches ± 1/4 inch
Drive	Power source: 32–35 PTO hp and larger turf tractor with 540 PTO output shaft Double CV drive line Belt drive from input shaft to impeller shaft (4–5VX) Drive ratio to Impeller: .486 : 1 Belt drive from impeller shaft to pump input shaft (2–5VX) Drive ratio to pump input shaft from impeller shaft: .389 : 1 Love joy torsion type belt tensioner with stabilizer bracket throughout.

General Specifications (continued)

Sound Levels	100 dB ± 10 dB @ 6 feet and 540 rpm input
Overall Dimensions	Width: 78 inches. Height: 83 inches. Length: 185 inches. Weight: 2300 lb. ± 250 lb.

Note: Specifications and design subject to change without notice.

Optional Equipment

Hand Held Remote Vacuum Hose Kit	Model No. 07080
Deck Finger Kit	Model No. 07081
Deck Combination Kit	Model No. 07082

Setup

Note: Use this chart as a checklist to ensure that all parts have been received. Without these parts, total setup cannot be completed.

Description	Qty.	Use
Drive shaft	1	Mount drive shaft blower and tractor
Canvas Ring	1	Mount to Versa Vac and attachment
Operator's Manual	1	Read before operating the machine.
Parts Catalog	1	
Registration card	1	Fill out and return to Toro.

Note: Cylinder lock bar is shipped on attachment lift cylinder. Remove cylinder lock bar before operating cylinder or damage may occur.

Ballast Requirements

Caution

Without the proper amount of ballast in the tires, the tractor may become unstable and cause bodily injury.

Make sure that the front of the tractor is equipped with the proper amount of ballast; refer to the tractor operator's manual for ballast requirements.

Mount Versa Vac to Tractor

1. Position Versa Vac on a flat, level surface.
2. Insert jack onto frame pin and secure with pin (Fig. 1).
3. Adjust jack height until Versa Vac frame is parallel with the ground.
4. Back tractor up to vac.
5. Adjust vac hitch clevis to same level as tractor hitch as follows:
   - Remove bolts and locknuts securing hitch clevis (Fig. 2) to vac frame.
   - Raise or lower hitch clevis to position approximately level with tractor hitch.
   - Secure with bolts and locknuts previously removed.

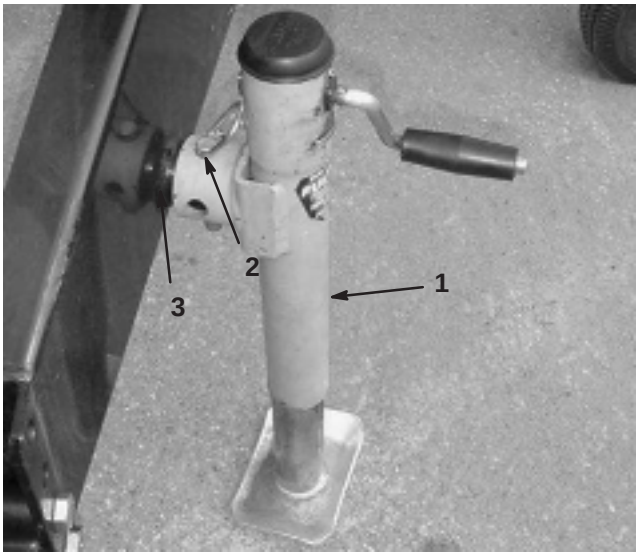

Figure 1

1. Jack
2. Pin
3. Frame pin

6. Connect tractor hitch to vac clevis hitch with hitch pin and clevis.
7. Remove jack pin, rotate jack upward and reconnect to frame pin for storage.

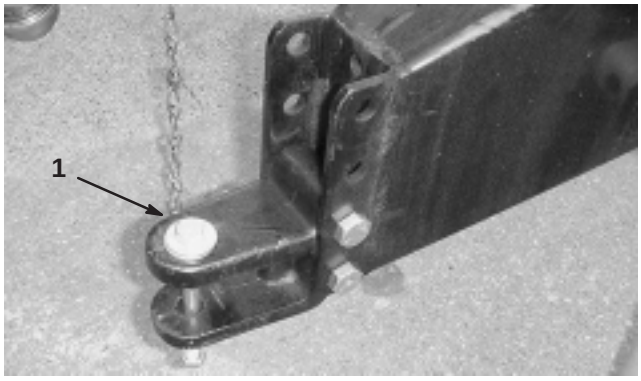

Figure 2

1. Clevis hitch

Adjusting the PTO Shaft Length

Important A long PTO shaft is supplied with the machine to accommodate large variations in the tractor's PTO. For most tractors this shaft is too long and must be cut to the correct length or damage may result.

1. Measure the distance from the lock groove of the tractor PTO shaft to the lock groove of the vac impeller input shaft. Record this dimension.
2. Fully collapse the PTO shaft and measure the distance between the lock pin collars. Record this dimension.
3. At its shortest length, the two halves of the PTO shaft must have at least 1-1/2 inches (37 mm) of additional clearance to collapse (Fig. 3). If the dimension in step 1 is not at least 1-1/2 inches (37 mm) greater than the dimension in step 2, the PTO shaft is too long; proceed to step 4. If there is enough clearance to allow the PTO shaft to collapse, proceed to step 9.

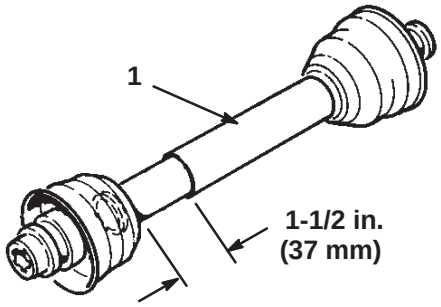

Figure 3

1. PTO shaft

4. Use the following calculation to establish how much shorter the shaft must be, when connected, to ensure a clearance of 1-1/2 inches (37 mm):
   A. Subtract the dimension recorded in step 2 from the dimension recorded in step 1. Record this dimension.
   B. Subtract the result in step 4A from 1-1/2 inches (37 mm). The PTO shaft must be shortened by this amount.
5. Using a hacksaw, cut the guards and the steel tubes shorter by the calculated length. Cut both halves of the PTO shaft.
6. Deburr the ends of the steel tubes internally and externally.
7. Remove all debris from the tube sections.
8. Grease the steel tubes liberally.
9. Assemble the PTO shaft and secure it to the vac and tractor.
10. Measure the shaft. If it is not at least 1-1/2 inches (37 mm), repeat the procedure.

Connecting the PTO Shaft

1. Connect the PTO shaft to the vac impeller input shaft.
2. Connect the PTO shaft to the rear tractor PTO shaft.
3. Slide the PTO shaft forward as far as it will go.
4. Depress the pin to secure the PTO shaft in place. Slide the PTO shaft back and forth to make sure it is properly locked.
5. Connect the shield safety chain to the tractor. Make sure that the chain remains slack when the tractor is turned.

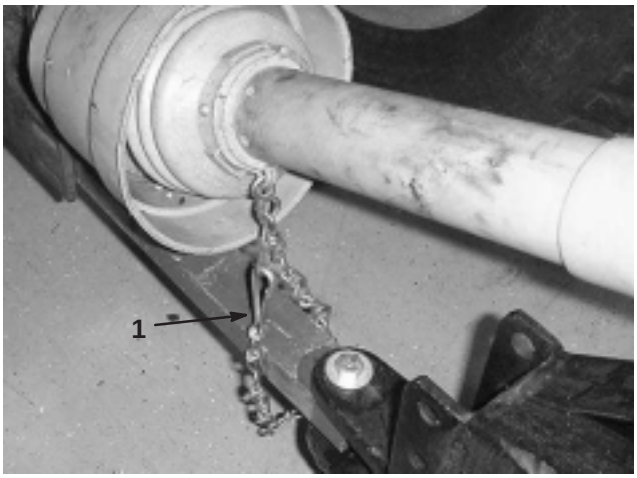

Figure 4

1. Safety chain

Caution

If shield chains are not connected, they could rotate during operation and cause bodily injury.

Keep all PTO shields in place and connect the shield chain to the tractor or PTO shields.

Removing the Versa Vac from the Tractor

1. Stop the tractor on a level surface, not on a slope.
2. Disengage the PTO and engage the parking brake.
3. Stop the engine and remove the key from the ignition switch.

Caution

Before leaving the operator's seat on the tractor, wait for the engine and all moving parts to stop.

4. Block the wheels.
5. Disconnect the safety shield chains from the tractor or PTO shield. Secure the end of the chain to the impeller side of the PTO shaft to prevent the PTO shaft from coming apart.
6. Disconnect the PTO shaft from the tractor output shaft.
7. Slide the PTO shaft back and remove it from the tractor.
8. Remove pin securing jack to frame pin and rotate jack down into position.
9. Secure jack to frame pin and adjust jack to support vac.
10. Remove hitch pin and clevis.
11. Drive tractor away.

Warning

Trailer is very heavy. Do not disconnect the trailer without first putting down the jack.

- **Personal injury could occur if hitch drops.**

Greasing the Machine

Before the machine is operated, the PTO shaft must be greased to ensure proper lubricating characteristics; refer to Greasing the Machine in the Maintenance section; page 17. Failure to properly grease the unit will result in premature failure of critical parts.

Before Operating

Caution

If you leave the key in the ignition switch, someone could accidently start the engine and seriously injure you or other bystanders.

Remove the key from the ignition before you do any maintenance.

Check Hydraulic Fluid

The machine's reservoir is filled at the factory with approximately 10 gallons of high quality hydraulic fluid. **Check the level of hydraulic fluid before the engine is first started and daily thereafter.** Appropriate **hydraulic oils are listed below.**

The following list is not assumed to be all–inclusive. Hydraulic fluids produced by other manufacturers may be used if they can cross reference to find an equivalent to the products listed. Toro will not assume responsibility for damage caused by improper substitutions, so use only products from reputable manufacturers who will stand behind their recommendation.

Multigrade Hydraulic Fluid — ISO VG 46

Normal Climate: 0 (–18° C) to 110° F (43° C)

Mobil	DTE 15M
Amoco	Rykon Premium ISO 46
Chevron	Rykon Premium Oil ISO 46
Conoco	Hydroclear AW MV46
Exxon	Univis N46
Pennzoil	AWX MV46
Shell	Tellus T 46
Texaco	Rando HDZ 46

Important The ISO VG 46 Multigrade fluid has been found to offer optimal performance in a wide range of temperature conditions. For operation in consistently high ambient temperatures, 65° F (18° C) to 120° F (49° C), ISO VG 68 hydraulic fluid may offer improved performance.

Note: Many hydraulic fluids are almost colorless, making it difficult to spot leaks. A red dye additive for the hydraulic system oil is available in 2/3 oz. (20 ml) bottles. One bottle is sufficient for 4–6 gal (15–22 1) of hydraulic oil. Order part no. 44–2500 from your authorized Toro distributor. Not recommended for biodegradable fluid (use food coloring).

1. Park machine on a level surface and stop engine. Make sure machine has been operated so oil is warm. Check level of oil by viewing sight gauge. If oil is up to middle of gauge, oil level is sufficient.

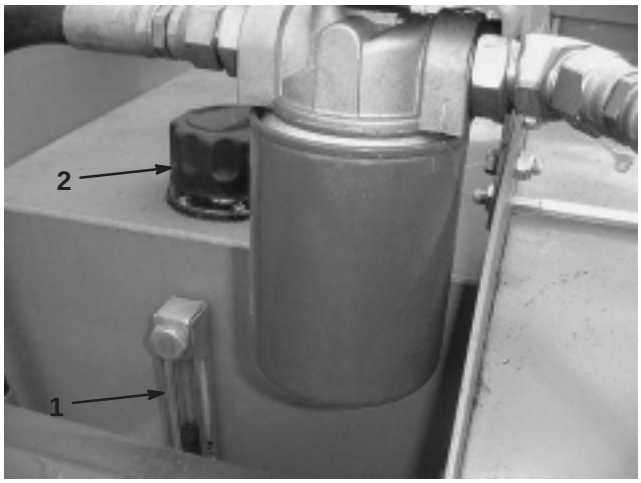

Figure 5

1. Sight gauge
2. Hydraulic reservoir cap

2. If oil level is lower than middle of gauge, remove cap from hydraulic oil reservoir and slowly add a high quality hydraulic oil until level reaches middle (maximum) of sight gauge. DO NOT OVER FILL.

Important To prevent system contamination, clean top of hydraulic oil containers before puncturing. Assure pour spout and funnel are clean.

3. Install reservoir cap.

Check Tire Pressure

Correct air pressure in the tires is 18 psi.

IMPORTANT: Maintain even pressure in both tires to assure proper machine performance. DO NOT UNDER INFLATE.

Check Torque Of Wheel Nuts

Warning

Failure to maintain proper torque of the wheel nuts could result in failure or loss of wheel and may result in personal injury.

Torque the wheel nuts to 85–100 ft.-lb. (115–136 N·m) after 1–4 hours of operation and again after 10 hours of operation. Torque every 200 hours thereafter.

Operation

Note: Determine the left and right sides of the machine from the normal operating position.

Caution

This machine produces sound levels in excess of 85 dBA at the operator's ear and can cause hearing loss through extended periods of exposure.

Wear hearing protection when operating this machine.

Controls

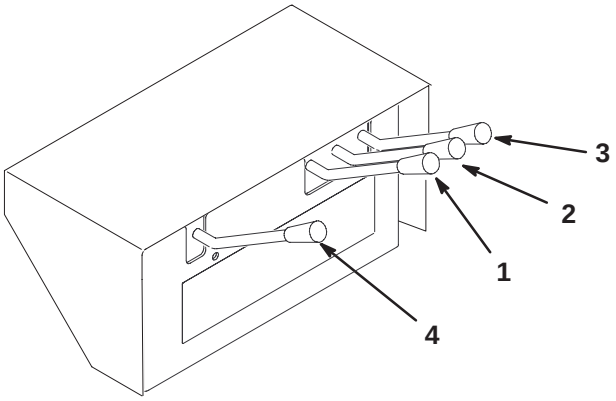

Figure 6

1. Brush control
2. Deck lift control
3. Trailer lift control
4. Auxiliary control

Trailer Lift Control

Used to dump trailer box. Up position raises the box and opens the door, down position lowers the box and closes the door.

Deck Lift Control

Used to raise and lower primary deck. Up position raises the deck and down position lowers the deck.

Brush Control

Used to operate rotating Finger Deck, Model 07081. Up position starts the deck and down position stops the deck.

Auxiliary Control

Used to operate Combination Deck, Model 07082. Up position starts the deck and down position stops the deck.

Tractor PTO

The vacuum fan on the Versa Vac will run as soon as the PTO is engaged. The Finger and Combination Decks are engaged by the hydraulic controls on the Versa Vac.

Note: Always engage tractor PTO gently at low engine RPM. Sudden engagement of tractor PTO at high engine rpm will likely cause damage to drive line components.

Tractor Hydraulics

All hydraulic machine functions are controlled by the hydraulic valve that is located at the front of the Versa Vac. The PTO must be running while the machine is in use. This is what creates the continuous oil flow throughout the machine.

Note: Never move a hydraulic lever rapidly between the up and down positions. A hydraulic motor forced to reverse directions instantly will likely be severely damaged. If any part of the machine becomes plugged, or material does not want to flow, shut machine off completely and manually remove blockage.

Note: The hydraulic control console can be adjusted for operator comfort by loosening the lever on frame behind controls, adjusting control console fore or aft and tightening lever.

Operating Tips

- Start the tractor and run it at a low RPM.
- Engage the PTO while the engine is at idle speed.
- Increase the PTO speed to 540 RPM.

Caution

Shut the engine off and wait for all moving parts to stop before checking for oil leaks, loose parts, and other malfunctions.

- Before starting operation, survey area to determine the best direction to go.
- To maintain a straight line when operating, sight off an object in the foreground.
- Always try to make a long, continuous run with a slight overlap on the return run.

Transporting the Equipment

The Versa Vac can be transported to work sites by virtually any vehicle with a draw bar type hitch attachment. THE VERSA VAC IS NOT DESIGNED FOR HIGHWAY TOWING.

- The wide floatation turf tires are NOT FOR HIGHWAY USE and are only for speeds below 15 mph. At speeds above 15 mph the tires will lose their tread, cause harm to the operator and damage the equipment.
- Be sure the deck is raised and the casters cannot contact the ground during transport. Also, make sure the cylinder lock bar (Fig. 7) is in place to prevent the lift cylinder from compressing during transport.

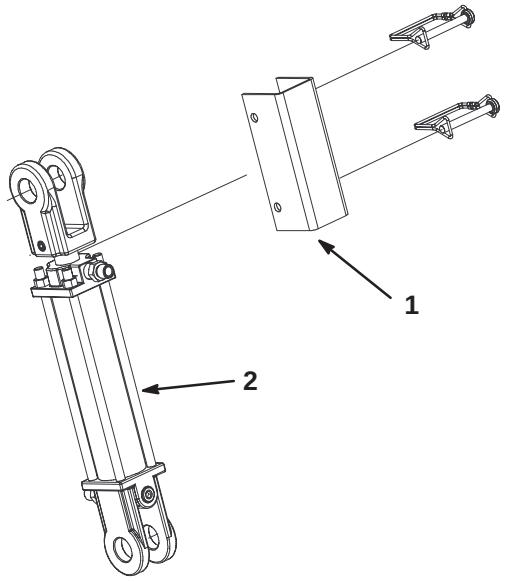

Figure 7

1. Cylinder lock bar
2. Lift cylinder

- Use adequate lighting and braking, a retainer type hitch pin and safety chain while towing.
- Make sure the tires are properly inflated.
- Make sure the towing vehicle has a rear view mirror and there is clear visibility behind the trailer.
- **AVOID SHARP TURNS**. Watch the tires of the tractor while turning to make sure they do not contact the tongue of the Versa Vac. Too short a turn could cause damage to the equipment and pose a safety hazard.

Manual Door Operation

To manually open the rear door of the Versa Vac without dumping the box:

- Remove cotter pins and washers securing rear of door links to frame pins (Fig. 8).

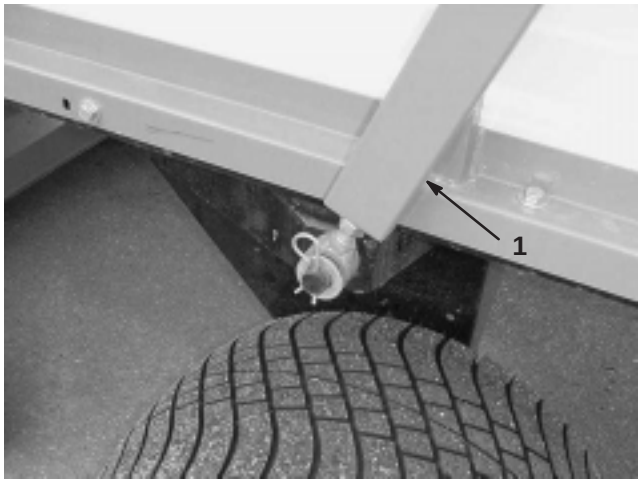

Figure 8

1. Door link

- Remove cotter pin securing door pin to frame (Fig. 9). Remove pin.

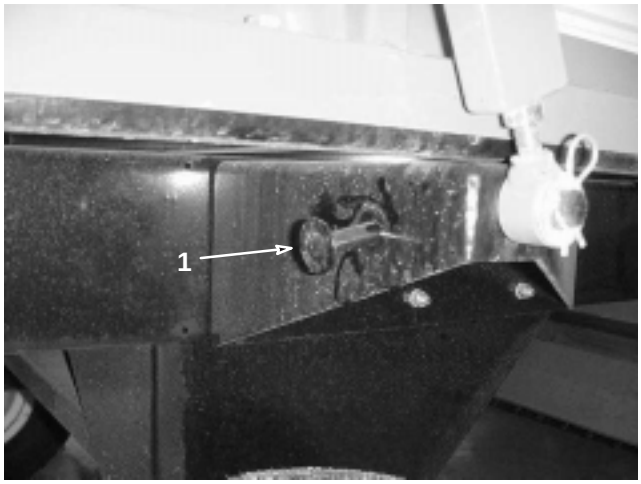

Figure 9

1. Door pin

- Grab the bottom of the rear door and lift upward.

- Insert door pin through holes in door link and under frame member. Secure door pin in position with cotter pin.

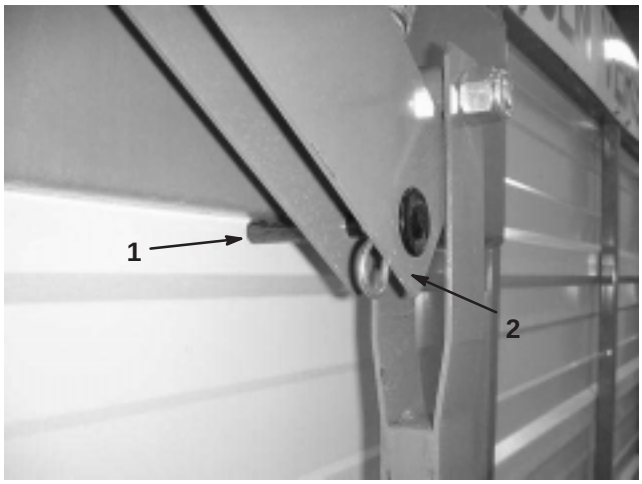

Figure 10

1. Door pin
2. Door link

Inspection And Cleanup After Operation

When operation has been completed, thoroughly clean and wash the machine. Air dry trailer. After cleaning, it is recommended that the machine be inspected for possible damage to all mechanical components. These procedures will assure that the machine will perform satisfactorily during next use.

Hand Held Remote Vacuum Hose Kit

An optional Hand Held remote Vacuum Hose Kit**,** Model 07080 is available from your Toro Distributor. Hose door (Fig. 11) and Handle latch (Fig. 12) are only used when kit is installed.

Warning

Do not place your hand or arm in the vacuum chute; keep the hose door or hose installed at all times.

- **Rotating fan can cut or amputate hand or arm if inserted into vacuum chute.**



Figure 11

1. Vacuum chute hose door

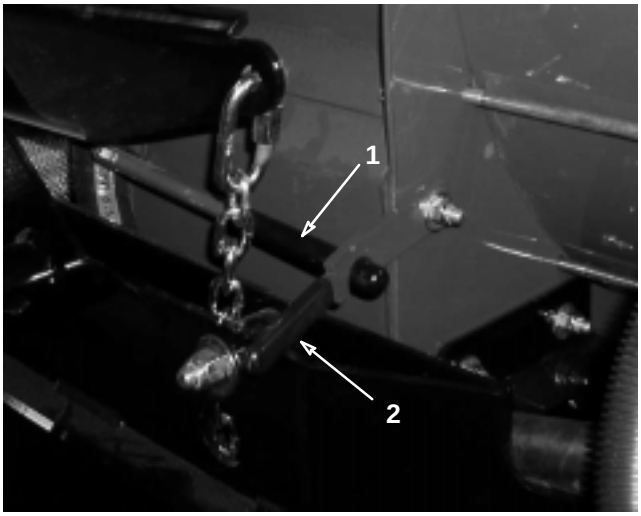

Figure 12

1. Door handle
2. Handle latch

Maintenance

Note: Determine the left and right sides of the machine from the normal operating position.

Greasing the Versa Vac

Fan Shaft Bearings

The impeller shaft and input shaft each have (2) bearings (Fig. 13) that must be lubricated after every 8 hours of operation with a No. 2 Lithium-based grease.

Note: Remove drive shield to access fittings.

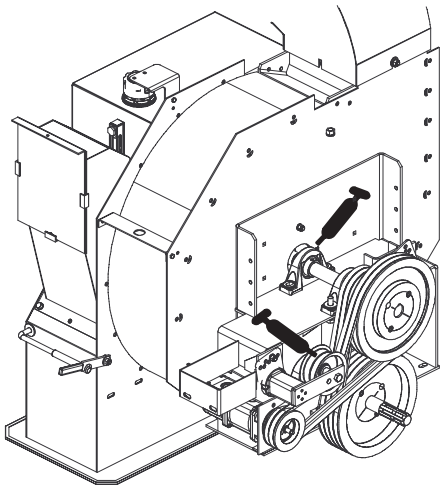

Figure 13

Drive Shaft

Under normal conditions, grease the (2) drive shaft fittings after every 100 hours of use (Fig. 14). Use a No. 2 Lithium-based grease.

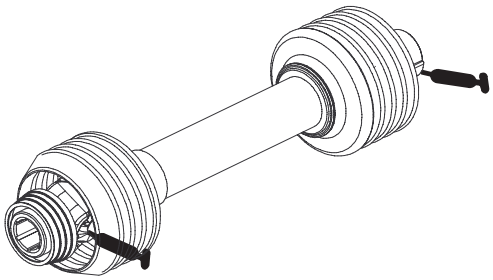

Figure 14

Changing Hydraulic Oil

Change hydraulic oil filter initially after the first 50 hours of operation, thereafter change hydraulic oil and filter after every 800 operating hours. If oil becomes contaminated, contact your local TORO distributor because the system must be flushed. Contaminated oil looks milky or black when compared to clean oil.

1. Turn engine off.
2. Disconnect small hydraulic hose (case drain) from bottom of reservoir and let hydraulic oil flow into drain pan. Reinstall and tighten hose when hydraulic oil stops draining.
3. Fill reservoir with approximately 10 gallons of hydraulic oil. Refer to Check Hydraulic Circuit Oil.

Important Use only hydraulic oils specified. Other fluids could cause system damage.

4. Install reservoir cap. Start tractor engine and use all hydraulic controls to distribute hydraulic oil throughout the system. Also check for leaks. Then stop the engine.
5. With oil warm, look into sight gauge. If hydraulic oil level is low, add enough oil to raise level to middle (maximum) of sight gauge. To prevent over filling, do not fill if oil is cold. DO NOT OVER FILL.

Replacing Hydraulic Filter

Initially, change filter after the first 50 operating hours, thereafter, every 800 operating hours or annually, whichever comes first.

Only the Toro replacement filter (Part No. 54–0110) can be used in the hydraulic system.

Important Use of any other filter may void the warranty on some components.

1. Turn tractor engine off and remove key from ignition.
2. Clean area around filter mounting area. Place drain pan under filter and remove filter.

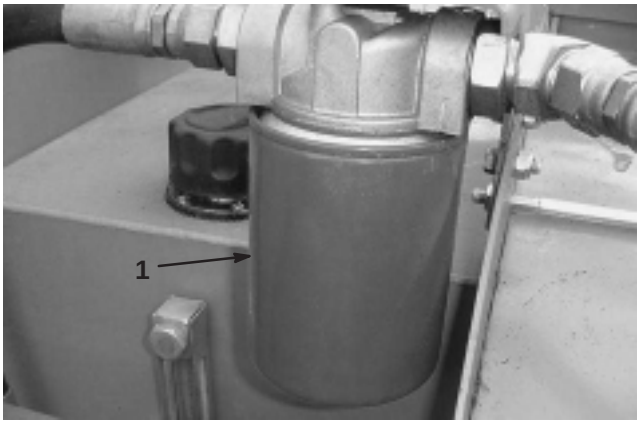

Figure 15

1. Hydraulic filter

3. Lubricate new filter gasket and fill the filter with hydraulic oil.

4. Assure filter mounting area is clean. Screw filter on until gasket contacts mounting plate. Then tighten filter one–half turn.

5. Start tractor engine and operate hydraulic controls to purge air from the system. Stop the engine and check oil level. Also check for any leaks.

Checking Hydraulic Lines And Hoses

Check hydraulic lines and hoses daily for leaks, kinked lines, loose mounting supports, wear, loose fittings, weather deterioration and chemical deterioration. Make all necessary repairs before operating.

Warning

Hydraulic fluid escaping under pressure can penetrate skin and cause injury.

- **Make sure all hydraulic fluid hoses and lines are in good condition and all hydraulic connections and fittings are tight before applying pressure to the hydraulic system.**
- **Keep your body and hands away from pin hole leaks or nozzles that eject high pressure hydraulic fluid.**
- **Use cardboard or paper to find hydraulic leaks.**
- **Safely relieve all pressure in the hydraulic system before performing any work on the hydraulic system.**
- **Seek immediate medical attention if fluid is injected into skin.**

Adjusting the Impeller Belt

Make sure belt is properly tensioned to ensure proper operation of the machine and unnecessary wear. Check belt frequently.

Note: Check/adjust the impeller belt tension after the first 20 hours of operation.

1. Remove the capscrews, washers and nuts securing the drive shield to the impeller housing (Fig. 16). Remove the shield.

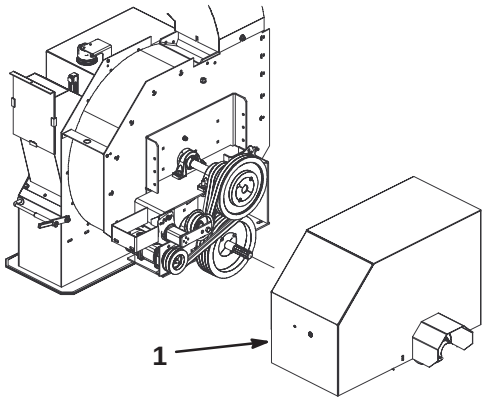

Figure 16

1. Drive shield

Note: The drive shaft does not have to be disconnected to adjust the belt.

2. On back side of frame, loosen capscrew securing belt tensioner to frame.

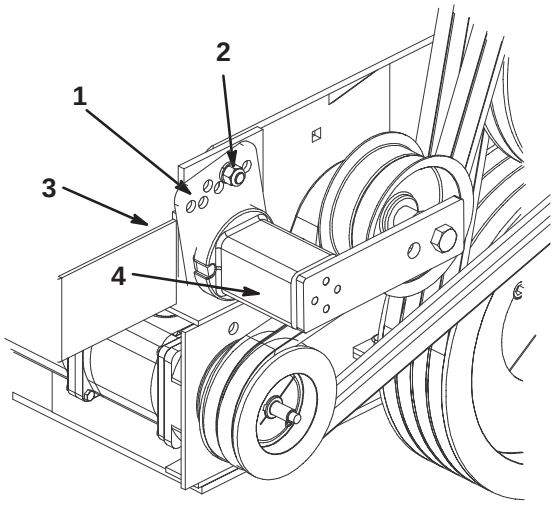

Figure 17

1. Tensioner guide
2. Capscrew & nut
3. Capscrew (back of frame)

3. Remove capscrew and nut securing tensioner guide to drive mount (Fig. 17). Belt tension will be released when capscrew is removed.

4. Position a large wrench on tensioner. Rotate tensioner clockwise until decal is aligned with 15° on tensioner tube.
5. Insert capscrew into aligned guide holes and secure with nut. If holes are not exactly aligned, rotate guide to the next higher hole until aligned.
6. Tighten capscrew securing, on back side of frame to lock tensioner.
7. Install the drive shield to the impeller housing with the capscrews, washers, and nuts.

Storage

1. Thoroughly clean the Vac. The impeller housing should be free of dirt, leaves, and debris.
2. Check the tire pressure; refer to Checking the Tire Pressure.
3. Check all fasteners for looseness; tighten as necessary.
4. Grease or oil all grease fittings and pivot points. Wipe up any excess lubricant.
5. Place a light coat of grease on the splines of the PTO shaft.
6. Lightly sand and use touch–up paint on painted areas that are scratched, chipped, or rusted. Repair any dents in the metal body.

Hydraulic Schematic

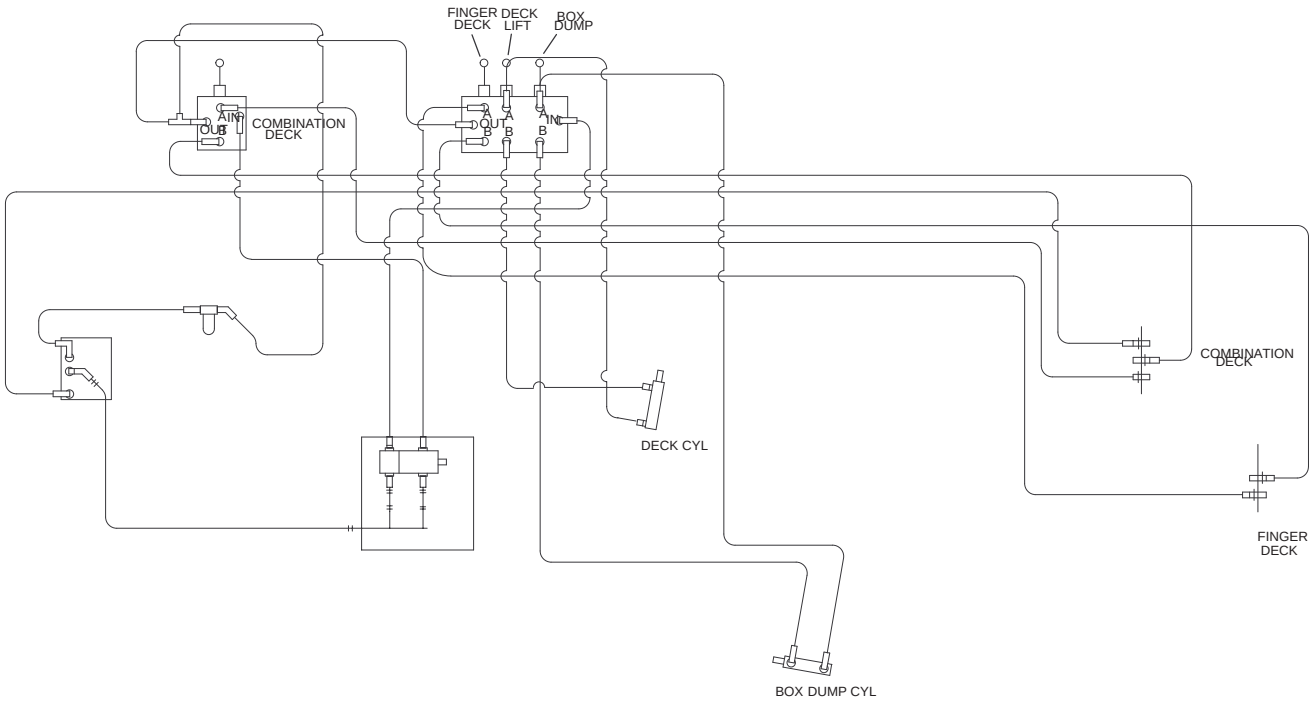

The Toro General Commercial Products Warranty

A Two-Year Limited Warranty

Conditions and Products Covered

The Toro Company and its affiliate, Toro Warranty Company, pursuant to an agreement between them, jointly warrant your 1996 or newer Toro Commercial Product ("Product") purchased after January 1, 1997, to be free from defects in materials or workmanship for two years or 1500 operational hours*, whichever occurs first. Where a warrantable condition exists, we will repair the Product at no cost to you including diagnosis, labor, parts, and transportation. This warranty begins on the date the Product is delivered to the original retail purchaser.

* Product equipped with hour meter

Instructions for Obtaining Warranty Service

You are responsible for notifying the Commercial Products Distributor or Authorized Commercial Products Dealer from whom you purchased the Product as soon as you believe a warrantable condition exists.

If you need help locating a Commercial Products Distributor or Authorized Dealer, or if you have questions regarding your warranty rights or responsibilities, you may contact us at:

Toro Commercial Products Service Department
Toro Warranty Company
8111 Lyndale Avenue South
Bloomington, MN 55420-1196
952-888-8801 or 800-982-2740
E-mail: commercial.service@toro.com

Owner Responsibilities

As the Product owner, you are responsible for required maintenance and adjustments stated in your operator's manual. Failure to perform required maintenance and adjustments can be grounds for disallowing a warranty claim.

Items and Conditions Not Covered

Not all product failures or malfunctions that occur during the warranty period are defects in materials or workmanship. This express warranty does not cover the following:

- Product failures which result from the use of non-Toro replacement parts, or from installation and use of add-on, modified, or unapproved accessories
- Product failures which result from failure to perform required maintenance and/or adjustments
- Product failures which result from operating the Product in an abusive, negligent or reckless manner
- Parts subject to consumption through use unless found to be defective. Examples of parts which are consumed, or used up, during normal Product operation include, but are not limited to, blades, reels, bedknives, tines, spark plugs, castor wheels, tires, filters, belts, etc.
- Failures caused by outside influence. Items considered to be outside influence include, but are not limited to, weather, storage practices, contamination, use of unapproved coolants, lubricants, additives, or chemicals, etc.
- Normal "wear and tear" items. Normal "wear and tear" includes, but is not limited to, damage to seats due to wear or abrasion, worn painted surfaces, scratched decals or windows, etc.

Parts

Parts scheduled for replacement as required maintenance are warranted for the period of time up to the scheduled replacement time for that part.

Parts replaced under this warranty become the property of Toro. Toro will make the final decision whether to repair any existing part or assembly or replace it. Toro may use factory remanufactured parts rather than new parts for some warranty repairs.

General Conditions

Repair by an Authorized Toro Distributor or Dealer is your sole remedy under this warranty.

Neither The Toro Company nor Toro Warranty Company is liable for indirect, incidental or consequential damages in connection with the use of the Toro Products covered by this warranty, including any cost or expense of providing substitute equipment or service during reasonable periods of malfunction or non-use pending completion of repairs under this warranty. Except for the Emissions warranty referenced below, if applicable, there is no other express warranty. All implied warranties of merchantability and fitness for use are limited to the duration of this express warranty.

Some states do not allow exclusions of incidental or consequential damages, or limitations on how long an implied warranty lasts, so the above exclusions and limitations may not apply to you.

This warranty gives you specific legal rights, and you may also have other rights which vary from state to state.

Note regarding engine warranty: The Emissions Control System on your Product may be covered by a separate warranty meeting requirements established by the U.S. Environmental Protection Agency (EPA) and/or the California Air Resources Board (CARB). The hour limitations set forth above do not apply to the Emissions Control System Warranty. Refer to the Engine Emission Control Warranty Statement printed in your operator's manual or contained in the engine manufacturer's documentation for details.

Countries Other than the United States or Canada

Customers who have purchased Toro products exported from the United States or Canada should contact their Toro Distributor (Dealer) to obtain guarantee policies for your country, province, or state. If for any reason you are dissatisfied with your Distributor's service or have difficulty obtaining guarantee information, contact the Toro importer. If all other remedies fail, you may contact us at Toro Warranty Company.

Part No. 374-0031 Rev. –