Form Number 3350-659 Rev A

22in Recycler® Lawnmower

Model No. 20031 - 240000001 and up.

Parts Catalog

Ordering Replacement Parts

To order replacement parts, please supply the part number, the quantity, and the description of each part desired.

Understanding Reference Numbers

Each Identified part in an illustration has a reference number. The reference number for a part also appears in the parts list, along with other information about the part.

This catalog uses two special reference number formats, one to indicate parts in a service assembly and another to indicate the quantity of a given part in an illustration.

Service Assembly Reference Numbers

Parts in service assemblies have reference numbers in the form a:b. The a represents the reference number of the entire service assembly and the b represents a sequential number unique to each part within the service assembly.

For example, a wheel assembly might be identified by reference number 6, the tire by 6:1, the valve by 6:2, and the wheel by 6:3. When you order the assembly identified by reference number 6, you receive all parts identified by reference numbers 6:1, 6:2, and 6:3. However, you may also order any part individually. Reference numbers of this type appear in illustrations and in part lists.

Reference Numbers Indicating Quantity

In an illustration, if a reference number indicates more than one part, the reference number has the form nX y. The n represents the quantity of the part, the X is the multiplication symbol, and the y represents the reference number.

For example, in an illustration, the reference number 2X 37 means that two of the parts identified by reference number 37 are indicated.

©The Toro Company - 2004
All Rights Reserved

Contents

Description	Page
Housing Assembly	3
Front Axle and Wheel Assembly	4
Rear Axle and Transmission Assembly	5
Transmission Assembly No. 106-3956	6
Engine and Blade Assembly	7
Handle Assembly	8
Electrical Assembly	9
Grass Bag Assembly	10
Carburetor Assembly No. 640303 Tecumseh No. LEV120-362004A	15
Engine Assembly No. 1 Tecumseh No. LEV120-362004A	11
Engine Assembly No. 2 Tecumseh No. LEV120-362004A	13
Recoil Starter Assembly No. 590739 Tecumseh No. LEV120-362004A	16
Recoil Starter Assembly No. 590702 (Optional) Tecumseh No. LEV120-362004A	17
Electric Starter Kit No. 37753 Tecumseh No. LEV120-362004A	18

Part Description Abbreviations

Part descriptions in this catalog may include the following abbreviations.

AR	as required
ASM	assembly
CARR	carriage
DEG	degrees
FH	flat head
GA	gauge
HF	hex flange
HH	hex head
HHF	hex head flange
HHFTF	hex head flange thread forming
HJ	hex jam
HLH	hex lag head
HOC	height-of-cut
HS	hex
HSBH	hex socket button head
HSFH	hex socket flat head
HSH	hex socket head
HWH	hex washer head
HWHTF	hex washer head thread forming
HYD	hydraulic
INC	incorporated
LH	left hand
NI	nylon insert
PPH	phillips pan head
PTH	phillips truss head
PTO	power take off
RH	right hand
SFH	slotted fillister head
SHH	slotted hex head
SHWH	slotted hex washer head
SPH	slotted pan head
SQH	square head
SRH	slotted round head
STD	standard
TAP	self tapping
TTH	torx truss head
WH	wing head

Footnotes

❶ Not serviced separately

❷ Obtain parts from your local Tecumseh dealer

❸ Included in Gasket Kit No. 37613

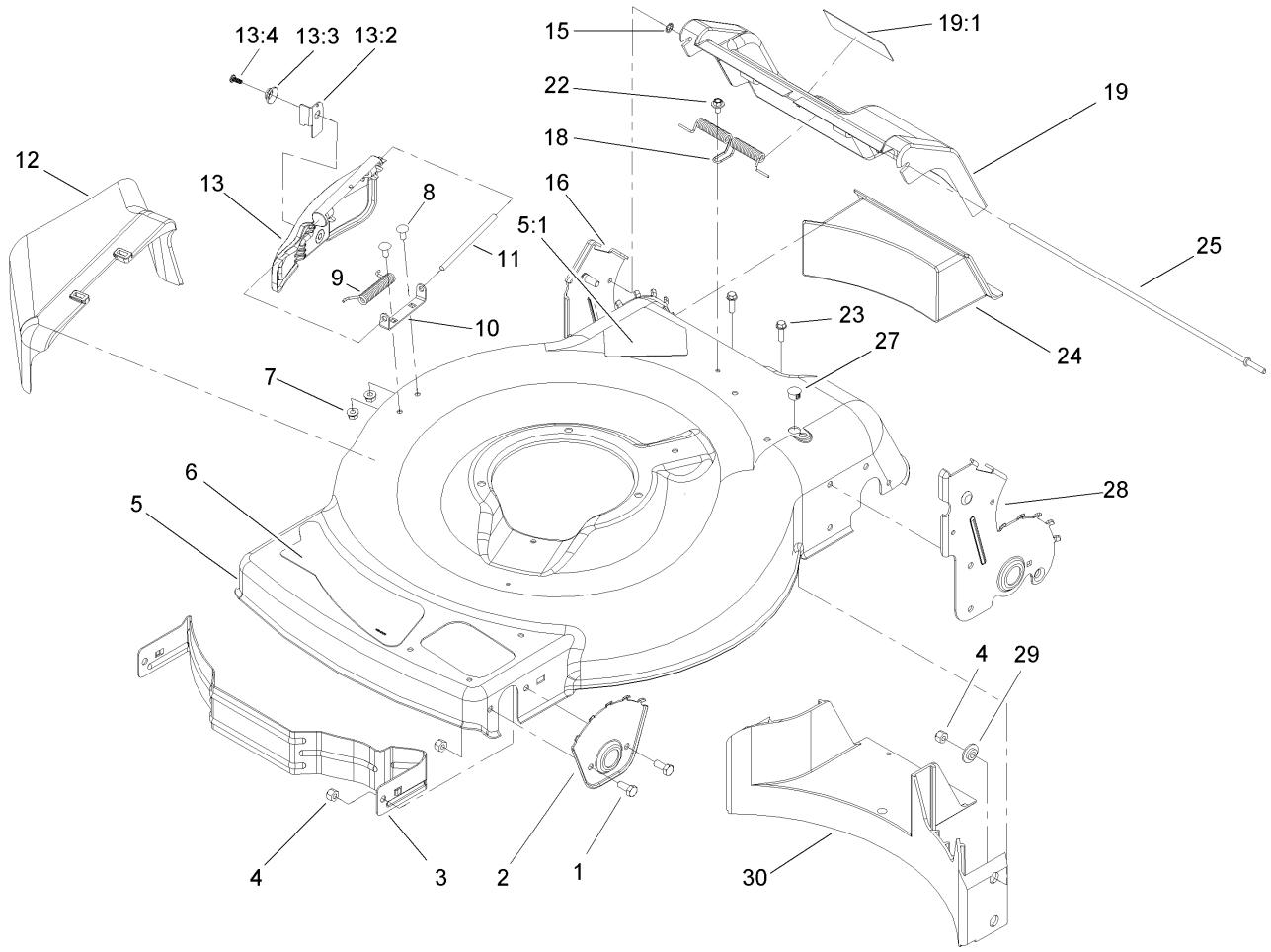

Housing Assembly

Ref	Part No.	Qty.	Description
1	322-3	4	Screw-HH
2	105-1808-03	2	Plate-Hoc, Front
3	104-8694-03	1	Baffle-Front
4	3296-29	8	Nut-Lock, NI
5	104-7915	1	Housing
5:1	105-6838	1	Decal-Danger
6	105-1297	1	Decal-Deck
7	32128-32	2	Nut-HHF
8	3229-11	2	Screw-CARR
9	99-5293	1	Spring-Torsion
10	99-5292	1	Bracket-Cover
11	99-5291	1	Rod-Cover
12	105-3028	1	Chute-Side Discharge
13	106-8376	1	Discharge Door ASM
13:2	107-0795	1	Latch-Door
13:3	107-7456	1	Cap-Door
13:4	107-7461	1	Screw-Plastite
15	32112-6	1	Pushnut
16	107-0790	1	RH Rear HOC Plate ASM
18	105-3032	1	Spring-Door, Rear
19	105-1323	1	Door
19:1	105-1295	1	Decal-Warning
22	46-6810	1	Screw And Washer ASM
23	46-8091	2	Screw-HWH

Ref	Part No.	Qty.	Description
24	105-1842	1	Plug-Discharge, Rear
25	105-1827	1	Rod-Pivot, Rear Door
27	104-9369	1	Plug-Dome
28	107-0783	1	LH Rear HOC Plate ASM
29	105-3006	4	Washer-Stepped
30	105-1834	1	Baffle-Rear

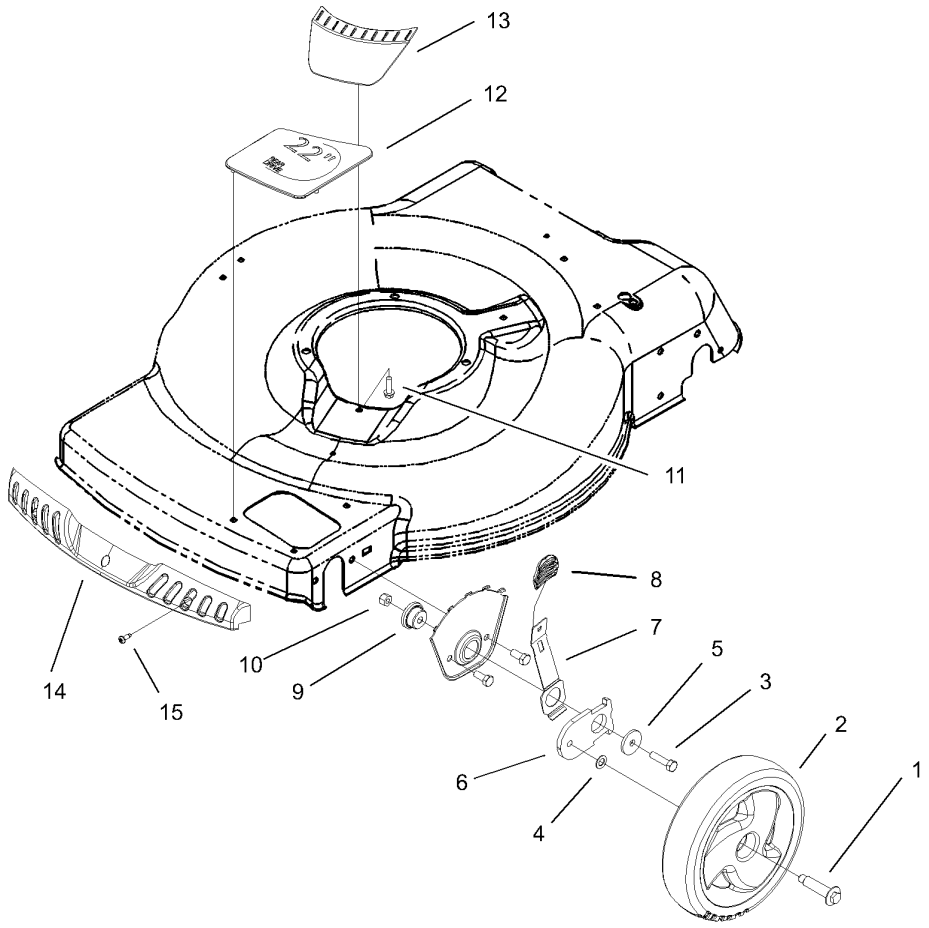

Front Axle and Wheel Assembly

Ref	Part No.	Qty.	Description
1	614650	2	Bolt-Shoulder
2	105-1814	2	Wheel ASM
3	322-6	2	Screw-HH
4	40-1940	2	Washer
5	105-3048	2	Washer-Flat
6	105-1807	2	Arm-Pivot, Front
7	105-1809	2	Arm-Spring
8	105-3042	2	Knob-Lever, HOC
9	105-1818	2	Bushing-Mount, HOC
10	3296-29	2	Nut-Lock, NI
11	46-8091	1	Screw-HWH
12	105-3004	1	Cover-Cutout
13	105-3005	1	Cover-Belt Opening
14	104-9359	1	Bumper-Mower
15	105-6849	3	Screw-Thread Forming

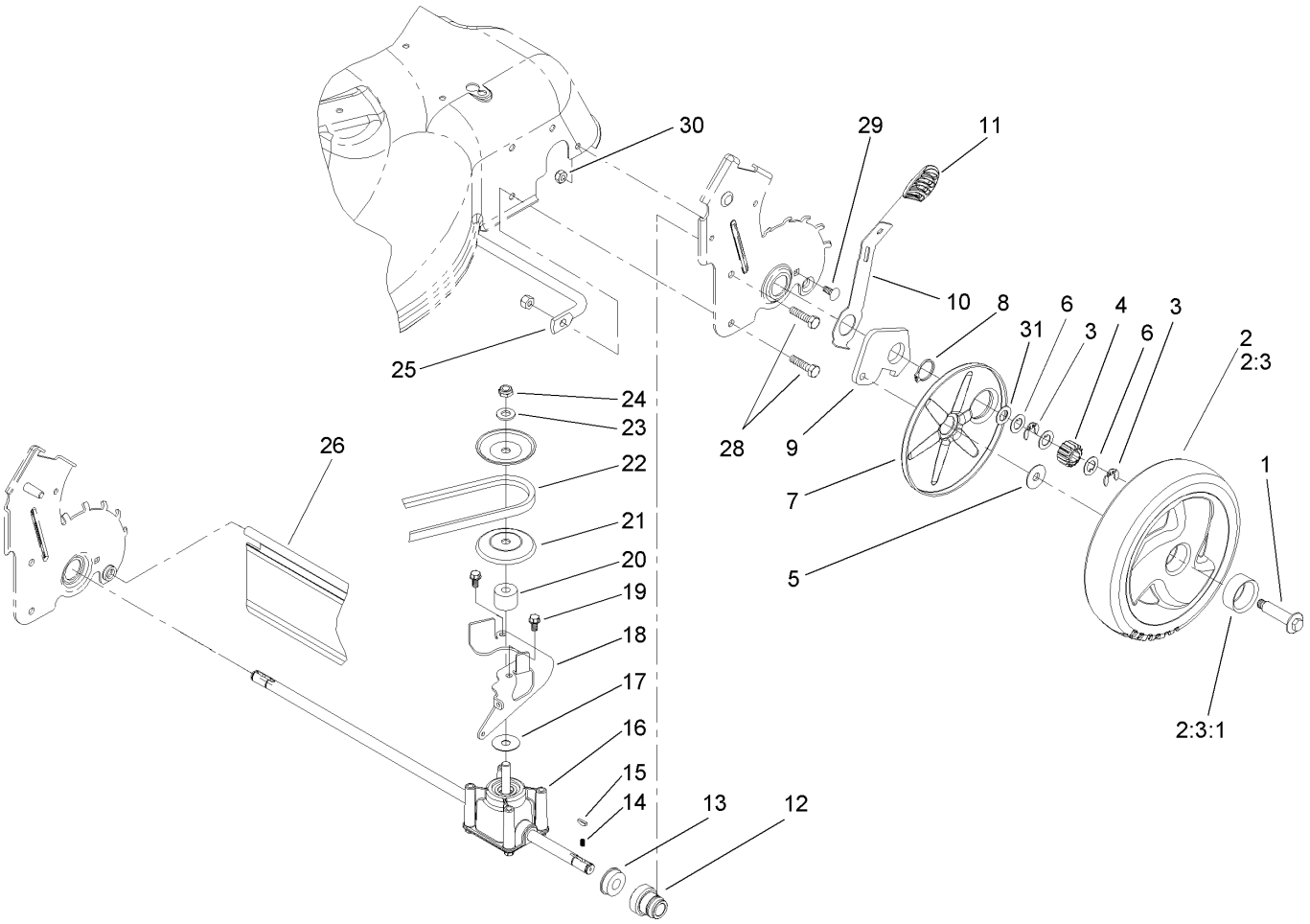

Rear Axle and Transmission Assembly

Ref	Part No.	Qty.	Description
1	614650	2	Bolt-Shoulder
2	105-3036	2	Wheel Gear ASM
❶2:3		1	Wheel Bushing ASM
2:3:1	27-6250	2	Bushing
3	65-2720	4	Klipring-Locking
4	105-3040	2	Gear-Pinion, 15t
5	614426	2	Washer-Stepped
6	105-6840	6	Washer-Thrust
7	105-1838	2	Cover-Wheel
8	32151-36	2	Ring-Retaining
9	105-1819	2	Arm-Pivot, Rear
10	105-1809	2	Arm-Spring
11	105-3042	2	Knob-Lever, HOC
12	104-8698	2	Retainer-Bearing, HOC
13	104-8699	2	Bearing-Ball
14	39-9650	2	Spring-Compression
15	612066	2	Key
16	106-3956	1	Transmission ASM
17	105-6814	1	Washer-Shield
18	105-1832-03	1	Bracket-Pivot, Rwd
19	32144-4	2	Screw-HWH
20	92-5791	1	Spacer
21	100-1176	2	Pulley-Half
22	91-2258	1	V-Belt

Ref	Part No.	Qty.	Description
23	3256-24	1	Washer-Flat
24	3296-5	1	Nut-Lock, NI
25	105-1811	1	Brace-HOC Plate
26	105-1843	1	Shield-Trailing
28	322-6	4	Screw-HH
29	3229-11	2	Screw-CARR
30	3296-16	2	Nut-Lock, NI
31	36-4780	1	Washer

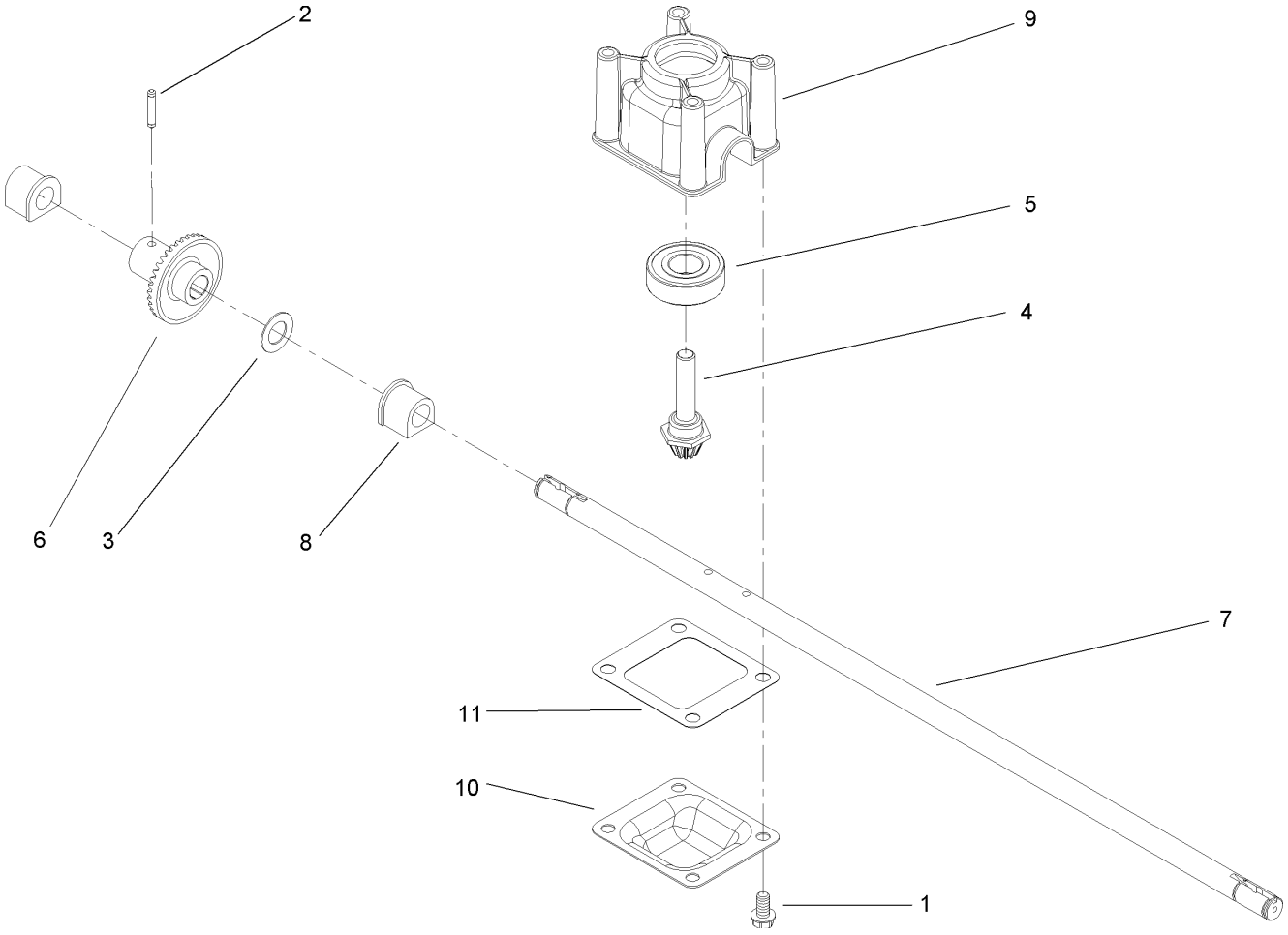

Transmission Assembly No. 106-3956

Ref	Part No.	Qty.	Description
1	32144-4	4	Screw-HWH
2	3285-19	1	Pin-Groove
3	36-4780	1	Washer
4	92-5790	1	Pinion
5	100-1048	1	Bearing-Ball
6	104-8671	1	Gear-Bevel, 37t
7	106-3957	1	Shaft-Output
8	104-8673	2	Bushing-Shaft, Output
9	104-8674	1	Gearcase-Upper
10	104-8675-03	1	Cover-Gearcase
11	105-6839	1	Gasket-Gearcase

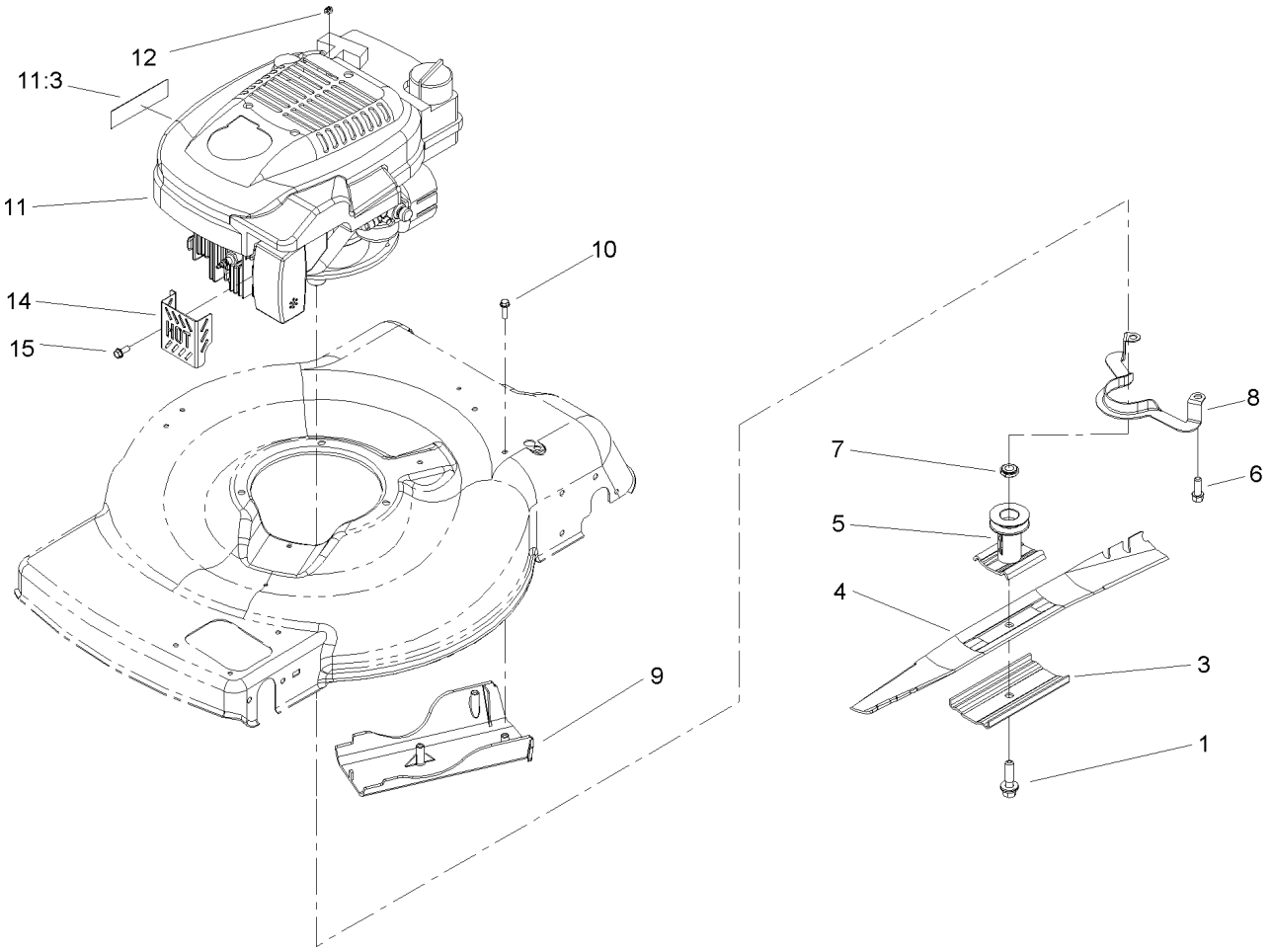

Engine and Blade Assembly

Ref	Part No.	Qty.	Description
1	105-8579	1	Bolt-Blade
3	105-3029-03	1	Support-Blade
4	104-8697-03	1	Blade-22 Inch
5	106-3987	1	Blade Driver ASM
6	95-1726	3	Screw-Taptite
7	106-3999	1	Spacer-Driver
8	105-3030-03	1	Guide-Belt
9	105-1835	1	Cover-Belt, Rear
10	46-8091	3	Screw-HWH
11		1	Engine-Tecumseh, Lev120-362004a
11:3	106-8374	1	Decal-Recoil
12	92-1701	1	Stop-Rope
14	106-8346-03	1	Guard-Muffler
15	32144-85	1	Screw-HWH

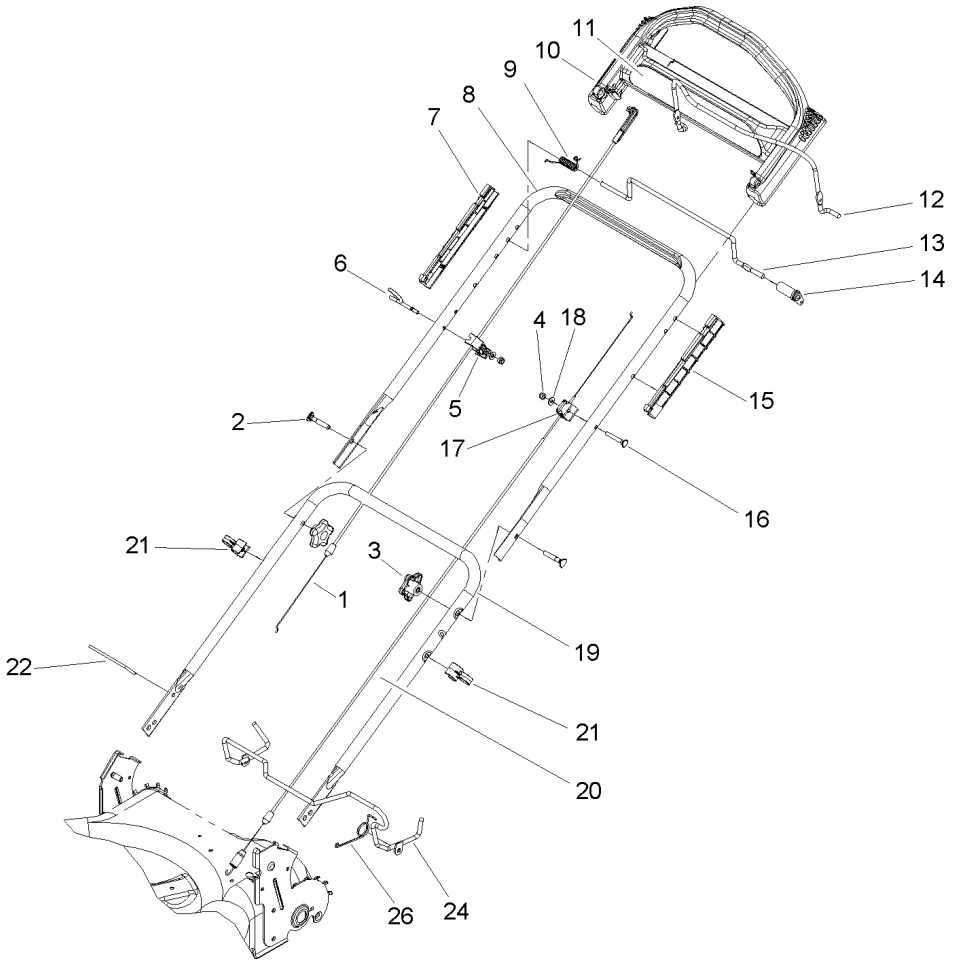

Handle Assembly

Ref	Part No.	Qty.	Description
1	104-8676	1	Cable-Brake
2	92-2260	2	Screw-Handle
3	106-4161	2	Knob-Handle
4	3296-73	2	Nut-Lock, NI
5	106-8331	1	Anchor-Cable
6	106-8330	1	Guide-Rope
7	105-6841	2	Guide-RH
8	104-8680-05	1	Handle-Upper
9	104-8690	1	Spring-Torsion
10	104-8678	1	Handle-Control
11	105-3033	1	Decal-Control Handle
12	104-8679-03	1	Bail-Brake
13	99-1588	1	Bar-Control, Traction
14	99-1589	1	Lever-Traction
15	105-6842	2	Guide-LH
16	321-50	1	Screw-HH
17	92-7729	1	Anchor-Cable, Upper
18	3256-1	2	Washer-Flat
19	107-0784-05	1	Handle-Lower
20	105-1844	1	Cable-Traction
21	106-6805	2	Guide-Cable
22	614249	1	Strap-Tie
24	107-0768	1	Release Lever ASM
26	107-7472	1	Spring-Torsion

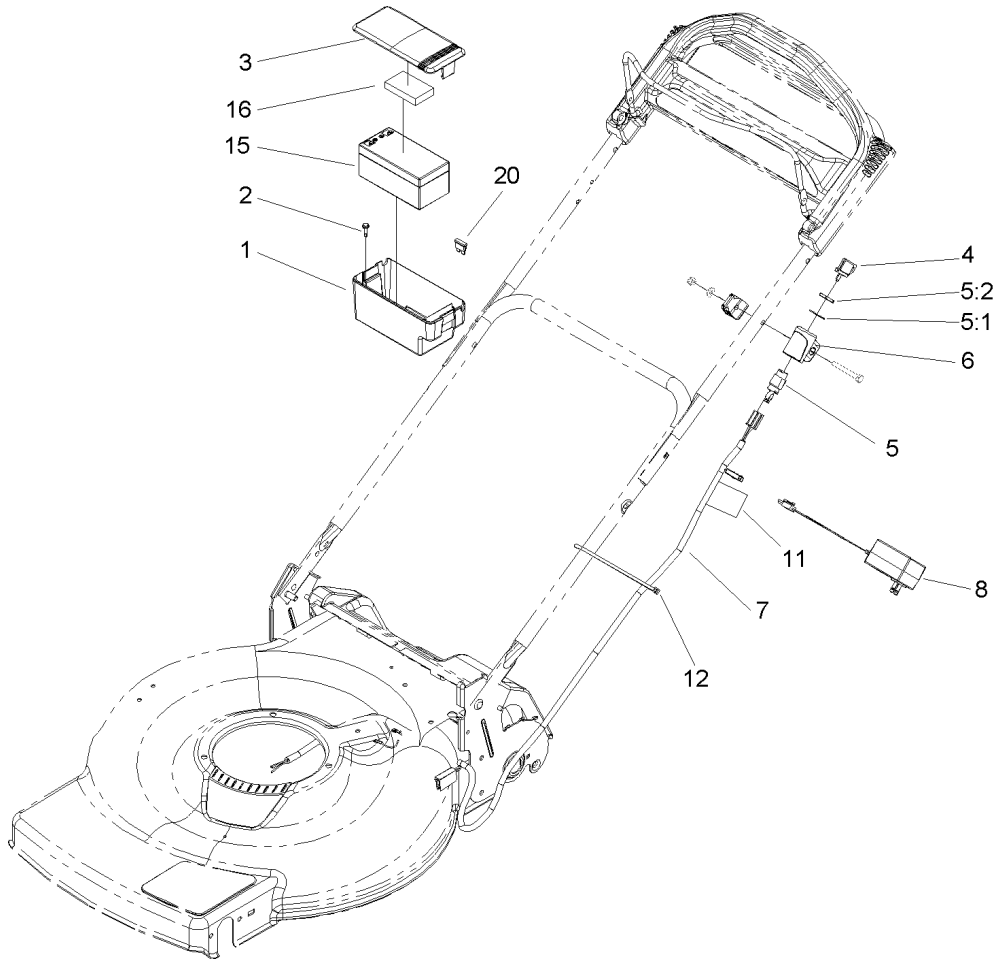

Electrical Assembly

Ref	Part No.	Qty.	Description
1	107-3757	1	Box-Battery
2	104-7648	2	Screw-Tek
3	107-3758	1	Cover-Battery
4	63-8360	1	Key-Ignition
5	46-5780	1	Switch-Starter
5:1	3254-5	1	Washer-Tooth
5:2	218-461	1	Nut-HH
6	104-8692	1	Mount-Switch
7	106-8396	1	Harness-Wire
8	104-7401	1	Charger-12 Volt
11	104-7953	1	Decal-Harness
12	614249	2	Strap-Tie
15	106-8397	1	Battery-12 Volt
16	107-3774	1	Foam-Battery, Top
20	99-6124	2	Fuse-40 Amp

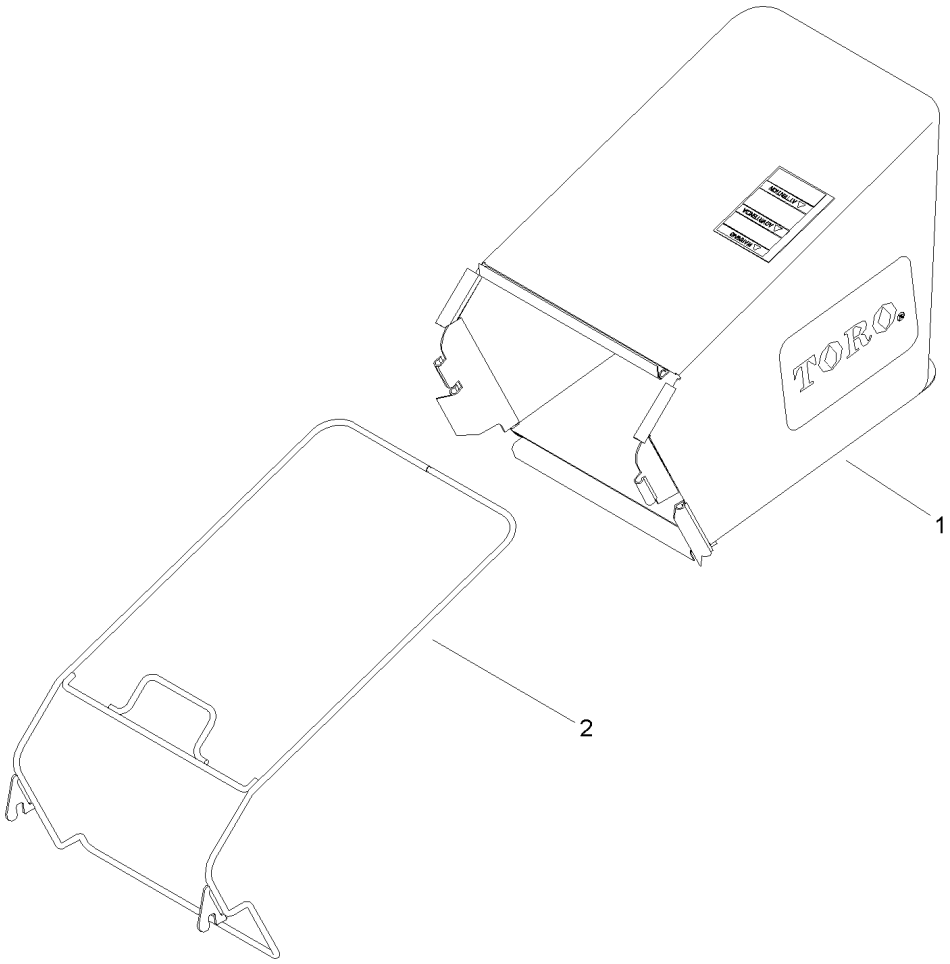

Grass Bag Assembly

Ref	Part No.	Qty.	Description
1	107-3779	1	Grass Bag ASM
2	105-6831-03	1	Brace-Bag Frame ASM

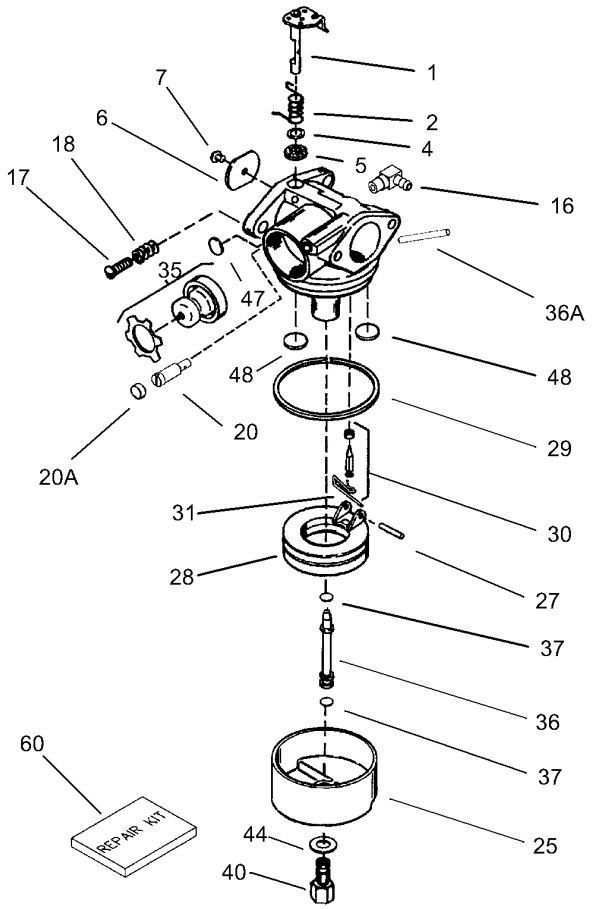

Carburetor Assembly No. 640303
Tecumseh No. LEV120-362004A

Ref	Part No.	Qty.	Description
0	640303	1	Carburetor (Incl. 184 Of Engine Parts List)
1	631615	1	Throttle Shaft And Lever ASM
2	631767	1	Throttle Return Spring
4	631184	1	Dust Seal Washer
5	631183	1	Dust Seal
6	640070	1	Throttle Shutter
7	650506	1	Shutter Screw
16	631807	1	Fuel Fitting
17	651025	1	Throttle Crack Screw/idle Speed Screw
18	630766	1	Tension Spring
20	640018	1	Idle Restrictor Screw
20A	640200	1	Idle Restrictor Screw Cap
25	631867	1	Float Bowl
27	631024	1	Float Shaft
28	632802	1	Float (Plastic)
29	631028	1	Float Bowl O-Ring
30	632807	1	Inlet Needle, Seat, & Clip (Incl. 31)
31	631022	1	Spring Clip
35	640259	1	Primer Bulb/retainer Ring
36	640019	1	Main Nozzle Tube
36A	632766	1	Bowl Vent Tube Extension
37	632547	2	O-Ring, Main Nozzle Tube

Ref	Part No.	Qty.	Description
40	640087	1	High Speed Bowl Nut
44	27110A	1	Bowl Nut Washer
47	630748	1	Welch Plug, Idle Mixture Well
48	631027	2	Welch Plug, Atmospheric Vent
60	632809	1	Repair Kit (Incl. Items Marked * In Notes)

Engine Assembly No. 1
Tecumseh No. LEV120-362004A

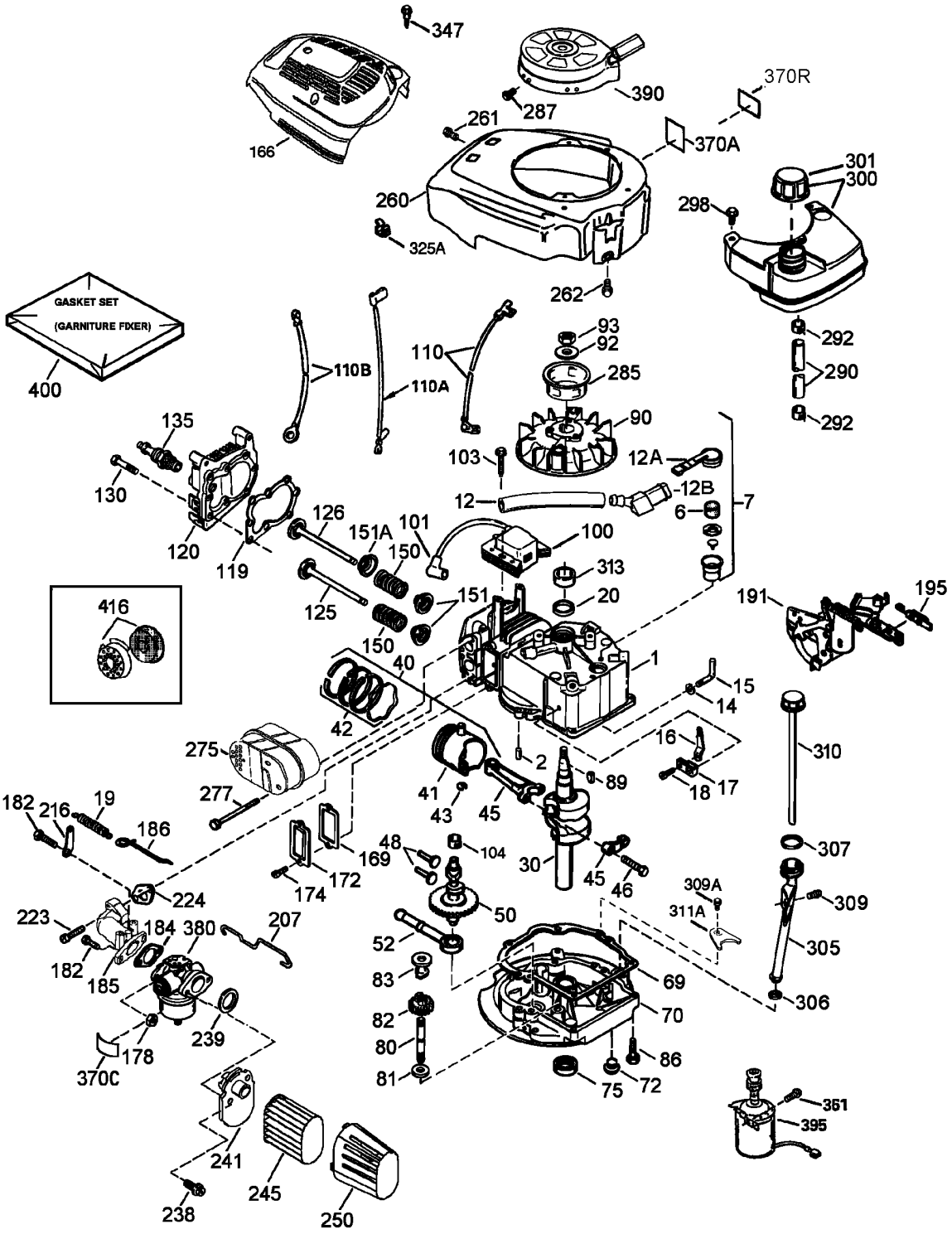

Engine Assembly No. 1
Tecumseh No. LEV120-362004A

Ref	Part No.	Qty.	Description
❷1	37465	1	Cylinder (Incl. Ref. #2, 20 And 150)
❷2	26727	2	Pin-Dowel
❷6	33734	1	Element-Breather
❷7	36557	1	Breather ASM (Incl. Ref. #6 And 12a)
❷12	36775	1	Tube-Breather
❷12A	36558	1	Breather Cover And Tube ASM (Incl. Ref. #12b)
❷12B	36694	1	Elbow-Breather Tube
❷14	28277	1	Washer
❷15	30589	1	Rod-Governor (Incl. Ref. #14)
❷16	34839A	1	Lever-Governor
❷17	31335	1	Lever Clamp-Governor
❷18	651018	1	Screw, T-15, 8-32 X 19/64in
❷19	36281	1	Spring-Extension
❷20	32600	1	Seal-Oil
❷30	37692	1	Crankshaft
❷40	40027	1	Piston, Pin And Ring Set (Std.)
❷41	40042	1	Piston And Pin ASM (Std.) (Incl. Ref. #43)
❷42	40006	1	Ring Set (Std.)
❷43	20381	2	Piston Pin Retaining Ring
❷45	36777	1	Connecting Rod ASM (Incl. Ref. #46)
❷46	32610A	2	Bolt-Connecting Rod
❷48	27241	2	Valve-Lifter
❷50	37460	1	Camshaft (Exhaust Mcr) (Incl. Ref. #104)
❷52	29914	1	Oil Pump Asm.
❷❸69	37609	1	Gasket-Mounting Flange
❷70	37608	1	Flange-Mounting (Incl. Ref. #72-83, 306, 309a And 311a)
❷72	37614	1	Plug-Oil Drain
❷75	27897	1	Seal-Oil
❷80	30574A	1	Shaft-Governor
❷81	30590A	1	Washer
❷82	30591	1	Governor Gear ASM (Incl. Ref. #81)
❷83	30588A	1	Spool-Governor
❷86	650488	6	Screw, 1/4-20 X 1-1/4in
❷89	611004	1	Key-Flywheel
❷90	37787	1	Flywheel
❷92	650815	1	Washer-Belleville
❷93	650816	1	Nut-Flywheel
❷100	34443C	1	Ignition-Solid State
❷101	610118	1	Cover-Spark Plug
❷103	651007	2	Screw, T-15, 10-24 X 15/16in
❷104	37480	1	Bushing-Cam
❷110	37047	1	Wire-Ground
❷110A	36953	1	Wire ASM
❷110B	36954	1	Wire ASM
❷❸119	36787	1	Gasket-Cylinder Head
❷120	36825	1	Head-Cylinder

Ref	Part No.	Qty.	Description
❷125	36780	1	Valve-Exhaust (1/32" Os) (Incl. Ref. #151)
❷125	37288	1	Valve-Exhaust (Std.) (Incl. Ref. #151)
❷126	37289	1	Valve-Intake (Std.) (Incl. Ref. #151 And 151a)
❷130	6021A	8	Screw, 5/16-18 X 1-7/16in
❷135	35395	1	Resistor Spark Plug (Rj19lm)
❷150	31672	2	Spring-Valve
❷151	31673	2	Cap-Valve Spring
❷151A	40017	1	Seal-Intake Valve
❷166	37694	1	Shroud-Engine
❷❸169	36783	1	Gasket-Valve Cover
❷172	36784	1	Cover-Valve
❷174	30200	2	Screw, 10-24 X 9/16in
❷178	29752	2	Nut & Lock Washer, 1/4-28
❷182	6201	2	Screw, 1/4-28 X 7/8in
❷❸184	26756	1	Carburetor To Intake Pipe Gasket
❷185	37466	1	Pipe-Intake
❷186	32653	1	Link-Governor
❷191	36559	1	Bracket-Brake, S.e. (Incl. Ref. #195)
❷195	610973	1	Terminal
❷207	34336A	1	Link-Throttle
❷216	33086	1	Lever-R.p.m. Adjusting
❷223	650451	2	Screw, 1/4-20 X 1in
❷❸224	36786	1	Gasket-Intake Pipe
❷238	650932	2	Screw, 10-32 X 49/64in
❷❸239	34338	1	Gasket-Air Cleaner
❷241	36919	1	Collar-Air Cleaner
❷245	36905	1	Filter-Air Cleaner
❷250	37122	1	Cover-Air Cleaner
❷260	37696A	1	Housing-Blower
❷261	30200	2	Screw, 10-24 X 9/16in
❷262	650831	2	Screw, 1/4-20 X 1/2in
❷275	37498	1	Muffler
❷277	650988	2	Screw, 1/4-20 X 2-9/32in
❷285	35000A	1	Cup-Starter
❷287	650926	2	Screw, 8-32 X 21/64in
❷290	29774	1	Line-Fuel
❷292	26460	2	Clamp-Line, Fuel
❷298	28763	2	Screw
❷300	35586A	1	Tank-Fuel (Incl. Ref. #292 And 301)

Engine Assembly No. 2
Tecumseh No. LEV120-362004A

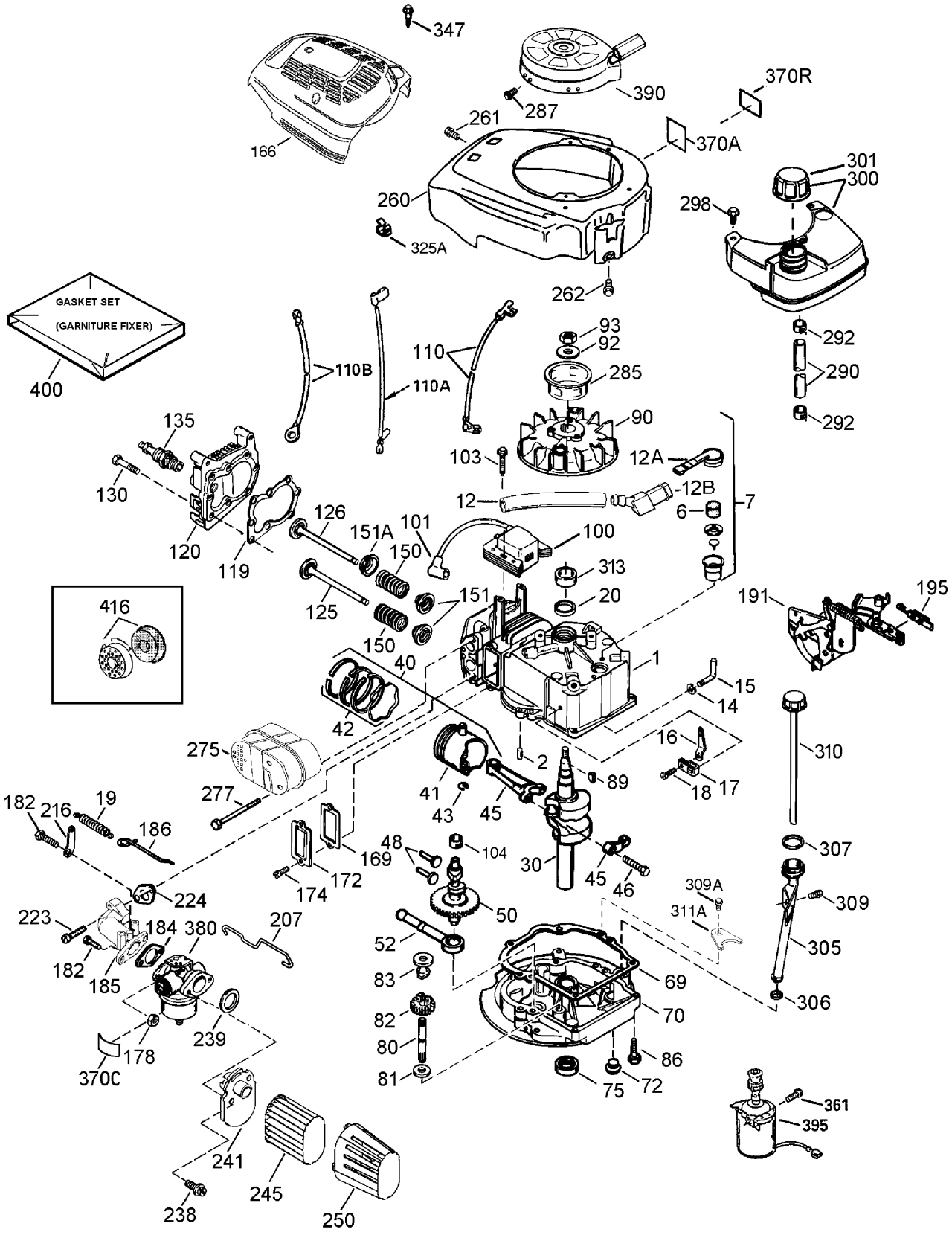

Engine Assembly No. 2
Tecumseh No. LEV120-362004A

Ref	Part No.	Qty.	Description
❷301	36246	1	Fuel Cap ASM
❷305	35647	1	Tube-Oil Fill
❷❸306	37610	1	Inoin-Ring
❷307	35499	1	Inoin-Ring
❷309	650562	1	Screw, 10-32 X 1/2in
❷309A	650783	1	Screw, 10-24 X 3/4in
❷310	35648	1	Dipstick
❷311A	37611	1	Bracket-Hold Down
❷313	34080	1	Spacer
❷325A	29443	1	Wire Clip
❷347	650898A	1	Screw, 10-32 X 27/32in
❷361	650831	2	Screw, 1/4-20 X 1/2in
❷370A	36261	2	Decal-Lubrication
❷370C	37695	1	Decal-Primer
❷370R	35977	1	Decal-Warning
❷380	640303	1	Carburetor (Incl. Ref. #184)
❷390	590739	1	Starter-Rewind
❷395	37753	1	Starter-Electric 12 Volt
❷400	37613	1	Gasket Set
❷416	37530	1	Spark Arrestor Kit (Optional)
❷	750876	1	Shortblock

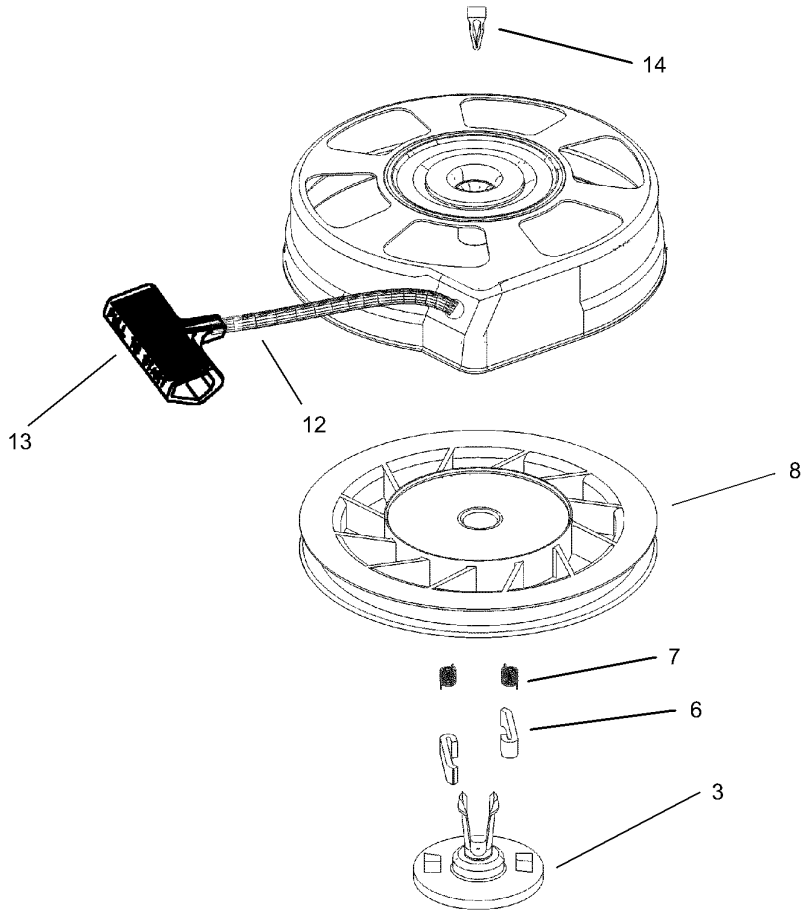

Recoil Starter Assembly No. 590739
Tecumseh No. LEV120-362004A

Ref	Part No.	Qty.	Description
3	590740	1	Retainer
6	590616	2	Starter Dog
7	590617	2	Dog Spring
8	590618A	1	Pulley And Rewind Spring ASM
11	590638A	1	Starter Housing ASM (40 Degree Grommet)
12	590535	1	Starter Rope (98in X 9/64in Dia.)
13	590701	1	Starter Handle
14	590760	1	Spring Clip

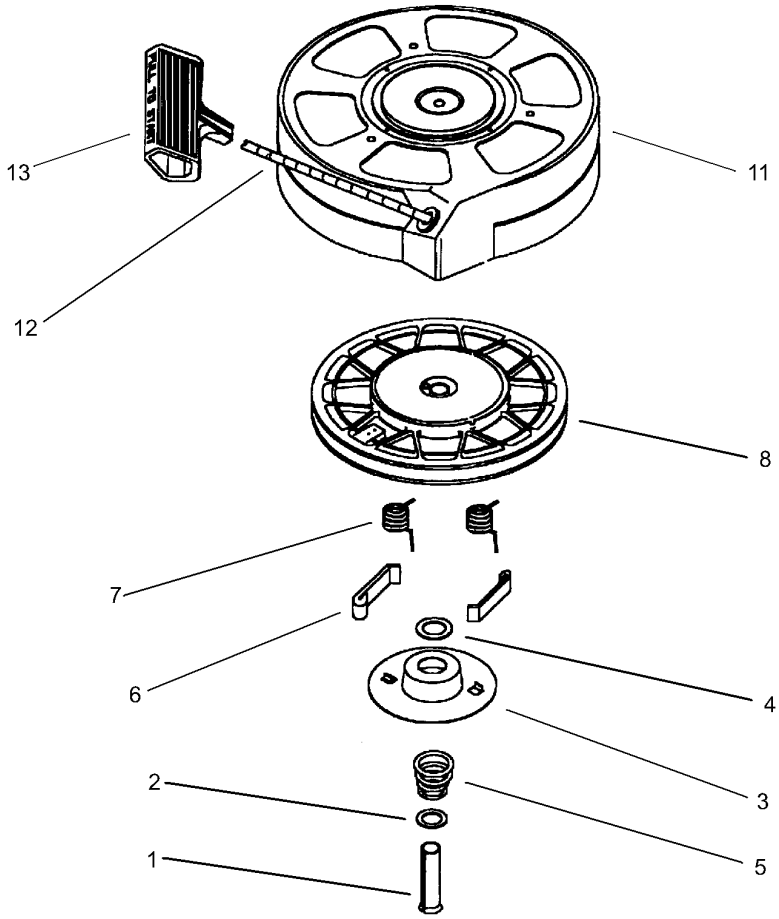

Recoil Starter Assembly No. 590702 (Optional)
Tecumseh No. LEV120-362004A

Ref	Part No.	Qty.	Description
1	590599A	1	Spring Pin ASM (Incl. Ref. #4)
2	590600	1	Washer
3	590696	1	Retainer
4	590601	1	Washer
5	590697	1	Brake Spring
6	590698	2	Starter Dog
7	590699	2	Dog Spring
8	590700	1	Pulley And Rewind Spring Asm.
11	590703A	1	Starter Housing Asm. (40 Degree Grommet)
12	590535	1	Starter Rope (98in X 9/64in Dia.)
13	590701	1	Starter Handle

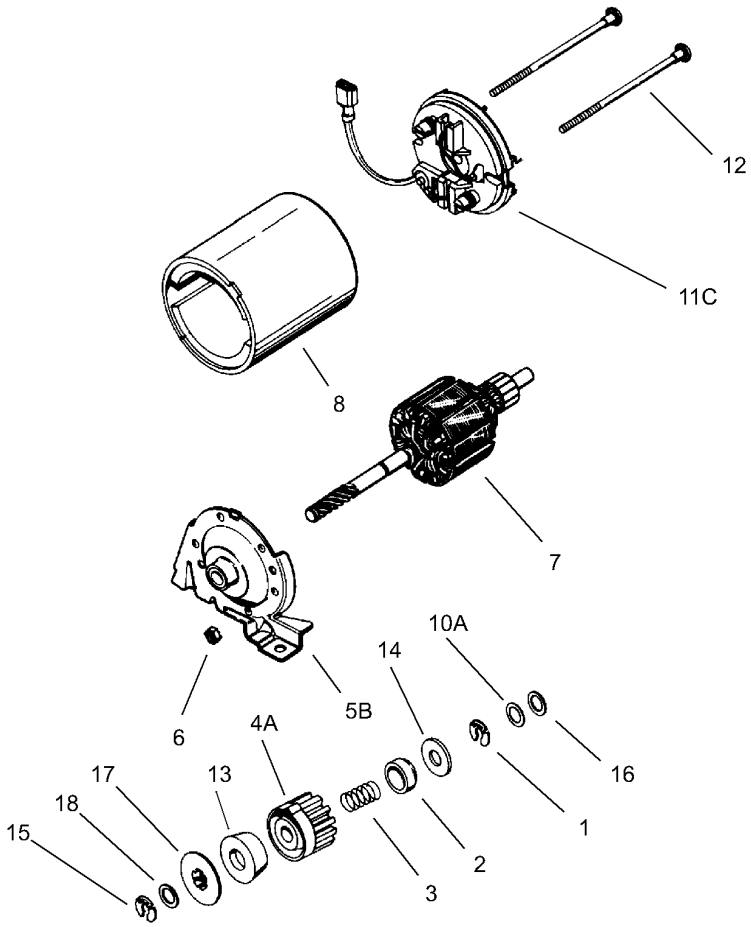

Electric Starter Kit No. 37753
Tecumseh No. LEV120-362004A

Ref	Part No.	Qty.	Description
1	34955	1	Ring-Retaining
2	34950	1	Spring-Retainer
3	34954	1	Spring
4A	37788	1	Gear
5B	34943	1	Drive End Cap ASM
6	33450	2	Nut-Lock
7	34944	1	Armature
8	34945	1	Housing ASM
10A	590500	1	Washer-Thrust
11C	35714	1	Commutator End Cap ASM (Incl. Brushes)
12	34947	2	Bolt
13	34946	1	Driver-Pinion
14	34951	1	Washer-Cup
15	34952	1	Ring-Retaining
16	34948	1	Washer
17	34953	1	Nut-Drive
18	590608	1	Washer

NOTES


TORO®