Operator's Manual

TimeCutter® 42in Zero Turn Riding Mower

Model—Serial Range

77405—400000000 and Up

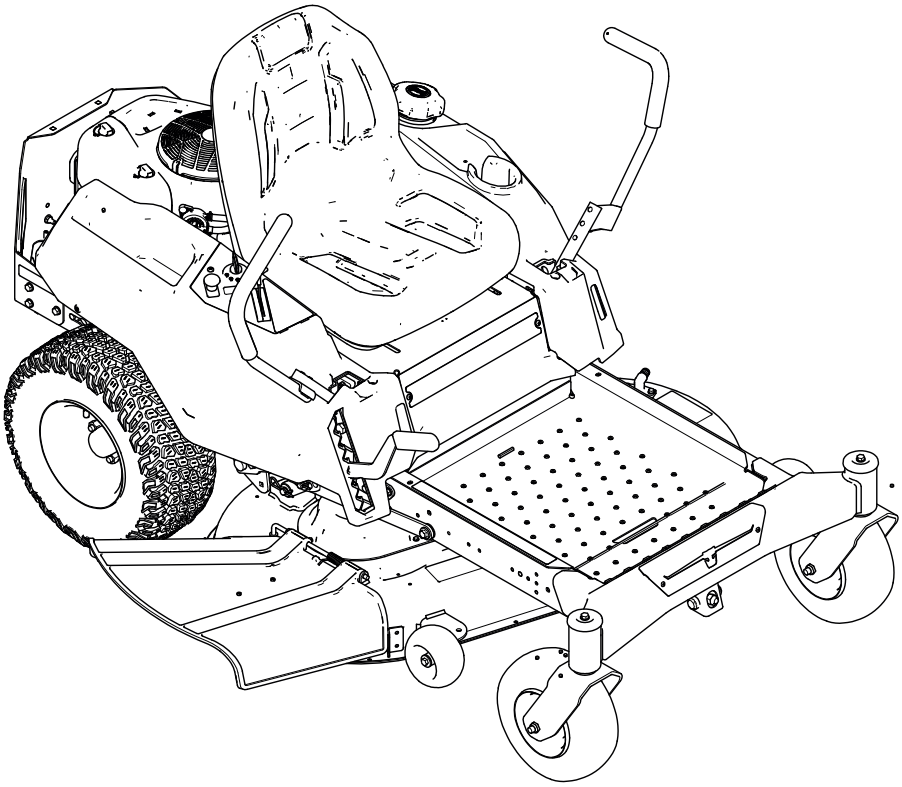

3481-249B

Original Instructions (EN)

Disclaimers and Regulatory Information

It is a violation of California Public Resource Code Section 4442 or 4443 to use or operate the engine on any forest-covered, brush-covered, or grass-covered land unless the engine is equipped with a spark arrester, as defined in Section 4442, maintained in effective working order or the engine is constructed, equipped, and maintained for the prevention of fire.

Gross or Net Torque: The gross or net torque of this engine was laboratory rated by the engine manufacturer in accordance with the Society of Automotive Engineers (SAE) J1940 or J2723. As configured to meet safety, emission, and operating requirements, the actual engine torque on this class of mower will be significantly lower. Please refer to the engine manufacturer's information included with the machine.

The enclosed engine owner's manual is supplied for information regarding the US Environmental Protection Agency (EPA) and the California Emission Control Regulation of emission systems, maintenance, and warranty. Replacements may be ordered through the engine manufacturer.

⚠ WARNING

CALIFORNIA
Proposition 65

The engine exhaust from this product contains chemicals known to the State of California to cause cancer, birth defects, or other reproductive harm.

Battery posts, terminals, and related accessories contain lead and lead compounds, chemicals known to the State of California to cause cancer and reproductive harm. Wash hands after handling.

Use of this product may cause exposure to chemicals known to the State of California to cause cancer, birth defects, or other reproductive harm.

Table of Contents

Chapter 1: Introduction 1–1
Intended Use 1–1
Getting Help 1–1
Manual Conventions 1–2
Safety Alert Classifications 1–2
Chapter 2: Safety 2–1
General Safety 2–1
Slope Indicator 2–2
Safety and Instructional Decals 2–3
Chapter 3: Product Overview 3–1
Control Panel 3–1
Motion-Control Levers 3–3
Park Position 3–3
Height-of-Cut Lever 3–3

© 2026—The Toro® Company

8111 Lyndale Ave So
Bloomington, MN 55044

Contact us at www.Toro.com
Printed in the USA

All rights reserved

Fuel-Presence Window 3–3
Specifications 3–4
Chapter 4: Operation 4–1
Before Operation 4–1
Before Operation Safety 4–1
Fuel 4–3
Performing Daily Maintenance 4–4
Break-In Time 4–4
Safety-Interlock System 4–4
Positioning the Seat 4–6
Adjusting the Motion-Control Lever Height 4–6
Adjusting the Motion-Control Lever Tilt 4–6
During Operation 4–7
During Operation Safety 4–7
Starting the Engine 4–10
Shutting Off the Engine 4–11
Driving the Machine 4–12
Operating the Mower Blade-Control Switch (PTO) 4–13
Side Discharge 4–15
Adjusting the Height of Cut 4–15
Adjusting the Anti-Scalp Rollers 4–16
Operating Tips 4–16
After Operation 4–17
After Operation Safety 4–17
Cleaning the Machine 4–18
Hauling the Machine 4–19
Chapter 5: Maintenance 5–1
Maintenance Safety 5–1
Recommended Maintenance Schedule 5–2
Pre-Maintenance Procedures 5–3
Moving a Non-Functioning Machine 5–3
Raising the Machine 5–4
Lubrication 5–5
Greasing the Bearings 5–5
Engine Maintenance 5–6
Engine Safety 5–6
Air Cleaner Service 5–6
Engine-Oil Service 5–8
Servicing the Spark Plug 5–11
Cleaning the Cooling System 5–12
Fuel Maintenance 5–13
Replacing the Fuel Filter 5–13
Electrical System Maintenance 5–14
Electrical System Safety 5–14
Battery Service 5–14
Jump-Starting the Machine 5–18
Servicing the Fuses 5–20
Drive System Maintenance 5–20
Checking the Tire Pressure 5–20
Checking the Wheel Lug Nuts 5–21
Adjusting the Tracking 5–21
Belt Maintenance 5–22
Removing or Installing the Floor Pan 5–22

Inspecting the Belts 5–23
Replacing the Mower Belt 5–23
Mower-Deck Maintenance 5–25
Blade Safety 5–25
Blade Service 5–25
Leveling the Mower Deck 5–28
Removing the Mower Deck 5–32
Installing the Mower Deck 5–33
Replacing the Grass Deflector 5–34
Cleaning 5–35
Washing the Underside of the Mower Deck 5–35
Disposing of Waste 5–36
Chapter 6: Storage 6–1
Storage Safety 6–1
Preparing the Machine for Storage Over 30 Days 6–1
Storing the Battery 6–3
Battery Storage Tips 6–3
Chapter 7: Troubleshooting 7–1
Chapter 8: Schematics 8–1
Electrical Diagram 8–1
California Proposition 65 Warning Information

Intended Use

This rotary-blade, riding lawnmower is intended to be used by homeowners in residential applications. It is designed primarily for cutting grass on well-maintained lawns. Using this product for purposes other than its intended use could prove dangerous to you and bystanders.

Read this information carefully to learn how to operate and maintain your product properly and to avoid injury and product damage. You are responsible for operating the product properly and safely.

Getting Help

Visit www.Toro.com for product safety and operation training materials, accessory information, help finding a dealer, or to register your product.

Whenever you need service, genuine Toro parts, or additional information, contact an Authorized Service Dealer or Toro Customer Service and have the model and serial numbers of your product ready. These numbers are located on the serial plate on your product (1). Write the numbers in the space provided.

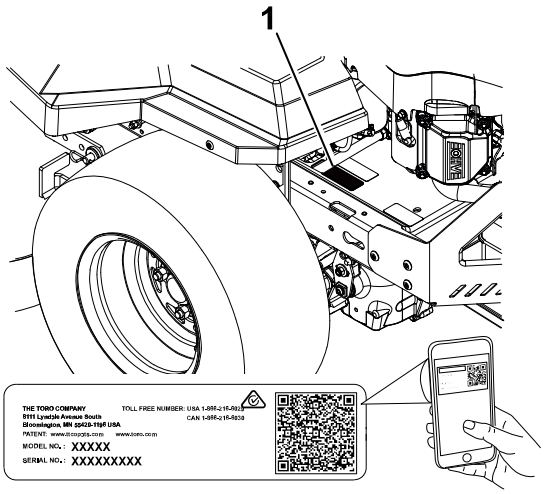

G586609

IMPORTANT

With your mobile device, you can scan the QR code on the serial number decal (if equipped) to access warranty, parts, and other product information.

Model Number:		**Serial Number:**	

Manual Conventions

This manual identifies potential hazards and has safety messages identified by the safety-alert symbol, which signals a hazard that may cause serious injury or death if you do not follow the recommended precautions.

G405934

This manual uses 2 words to highlight information. **Important** calls attention to special mechanical information and **Note** emphasizes general information worthy of special attention.

Safety Alert Classifications

The safety-alert symbol shown in this manual and on the machine identifies important safety messages that you must follow to prevent accidents.

Safety-alert symbol appears above information that alerts you to unsafe actions or situations and is followed by the word **DANGER**, **WARNING**, or **CAUTION**.

DANGER

Danger indicates an imminently hazardous situation which, if not avoided, *will* result in death or serious injury.

WARNING

Warning indicates a potentially hazardous situation which, if not avoided, *could* result in death or serious injury.

CAUTION

Caution indicates a potentially hazardous situation which, if not avoided, *may* result in minor or moderate injury.

General Safety

This product is capable of amputating hands and feet and of throwing objects. Always follow all safety instructions to avoid serious personal injury or death.

- Read, understand, and follow the instructions and warnings in this *Operator's Manual* and on the machine, engine, and attachments before starting the engine.
- Do not allow children or untrained people to operate or service the machine. Allow only people who are responsible, trained, familiar with the instructions, and physically capable to operate or service the machine.
- Keep bystanders, particularly children, away from the operating area.
- Do not operate the machine near drop-offs, ditches, embankments, water, or other hazards, or on slopes greater than 15°.
- Do not put your hands or feet near moving parts.
- Do not operate the machine without all safety shields, guards, switches, and other devices in place and working properly.
- Park the machine on a level surface, disengage the drives, engage the parking brake, shut off the engine, remove the key, and wait for all moving parts to stop before leaving the operator's position.
- Wait for the machine to cool before servicing, adjusting, fueling, cleaning, or storing it.

Slope Indicator

You may copy this page for personal use.

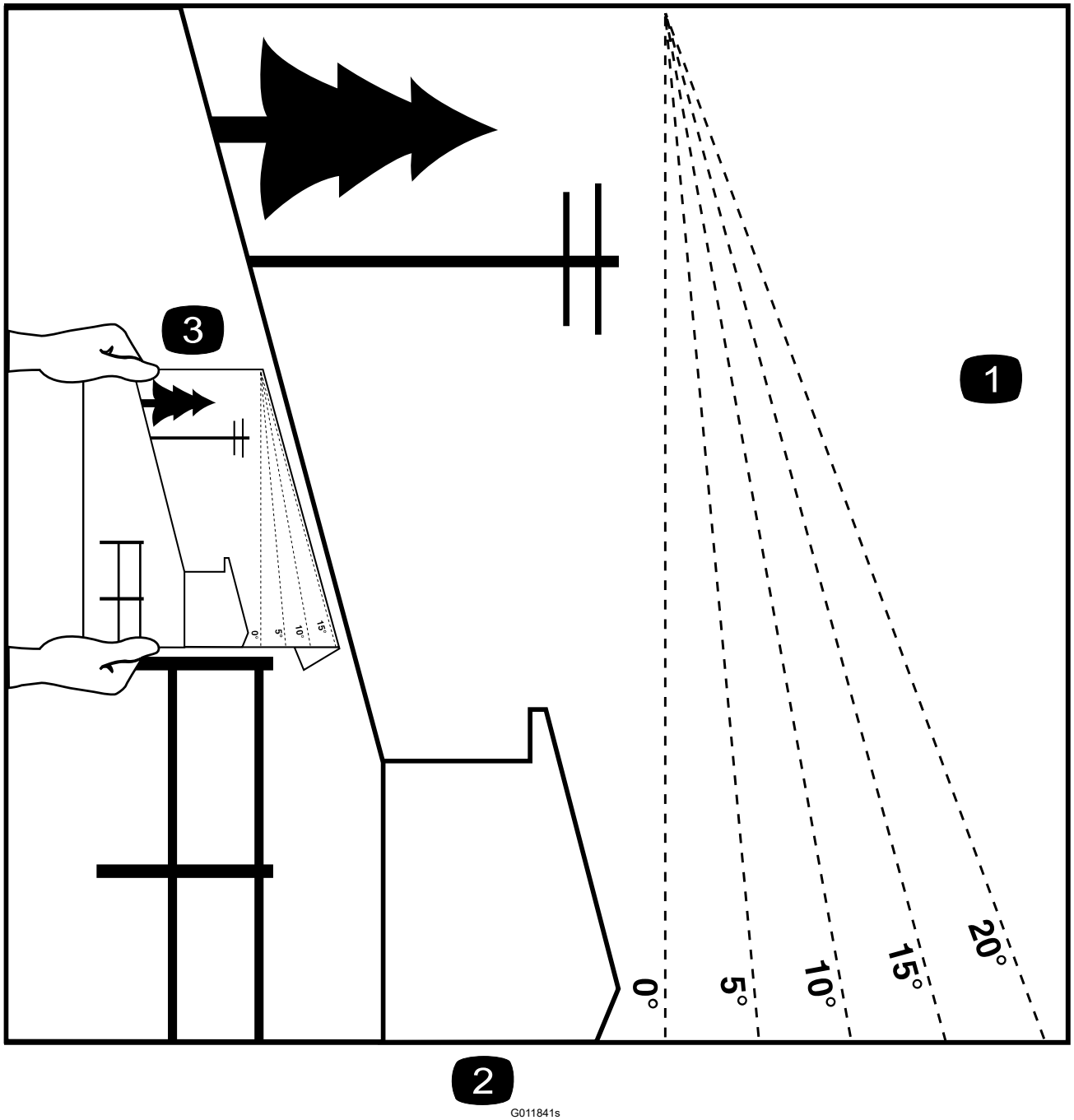

1. The maximum slope you can operate the machine on is 15 degrees. Use the slope chart to determine the degree of slope of hills before operating. **Do not operate this machine on a slope greater than 15 degrees.** Fold along the appropriate line to match the recommended slope.
2. Align this edge with a vertical surface, a tree, building, fence pole, etc.
3. Example of how to compare slope with folded edge

Safety and Instructional Decals

Safety decals and instructions are easily visible to the operator and are located near any area of potential danger. Replace any decal that is damaged or missing.

Battery Symbols

Some or all of these symbols are on your battery.

s_batterysymbols2

1. Explosion hazard
2. No fire, open flame, or smoking
3. Caustic liquid/chemical burn hazard
4. Wear eye protection.
5. Read the *Operator's Manual*.
6. Keep bystanders away from the battery.
7. Wear eye protection; explosive gases can cause blindness and other injuries.
8. Battery acid can cause blindness or severe burns.
9. Flush eyes immediately with water and get medical help fast.
10. Contains lead; do not discard

Decal Part: Manufacturer Mark

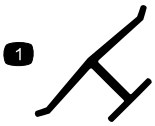

s_decaloemmarkt

1. This mark indicates that the blade is identified as a part from the original machine manufacturer.

Fuel Tank Symbols

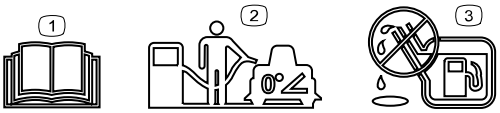

s_decalfueltanksymbols

1. Read the *Operator's Manual*.
2. Park the machine on a level surface when filling the fuel tank.
3. Do not overfill the fuel tank.

PTO Symbols

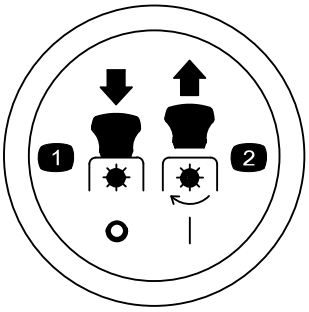

s_decalptosymbols

1 PTO—disengage

2 PTO—engage

Decal Part: 105-7015

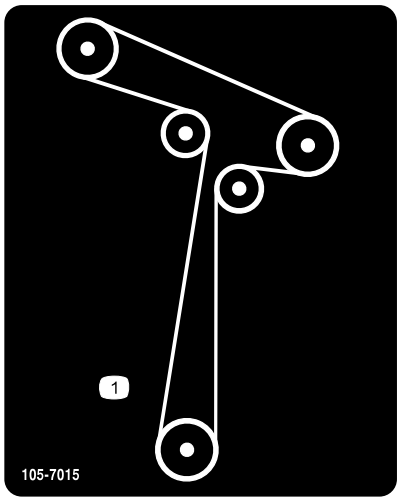

decal105-7015

1 Belt routing

Decal Part: 121-2989

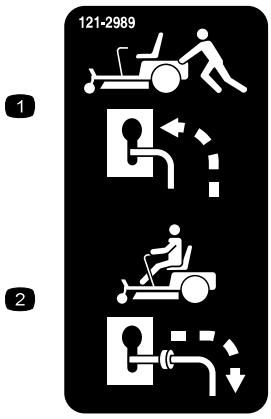

s_decal121-2989

1 Bypass lever position for pushing the machine.

2 Bypass lever position for operating the machine.

Decal Part: 130-0731

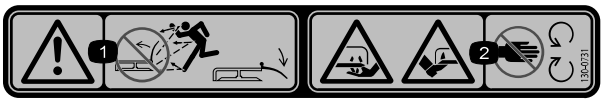

s_decal130-0731

(1) Warning—thrown object hazard; keep the deflector in place.

(2) Cutting hazard of hand or foot, mower blade—keep away from moving parts.

Decal Part: 132-0872

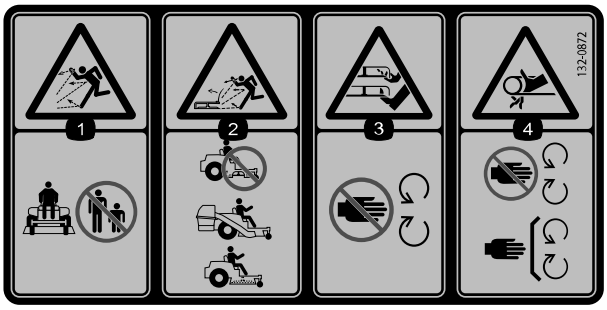

s_decal132-0872

(1) Thrown object hazard—keep bystanders away.

(2) Thrown object hazard, mower—do not operate the machine with an open deck; use a bagger or a deflector.

(3) Cutting/dismemberment hazard of hands or feet, mower blade—stay away from moving parts.

(4) Entanglement hazard of hands, belt—stay away from moving parts; keep all guards and shields in place.

Decal Part: 132-0905

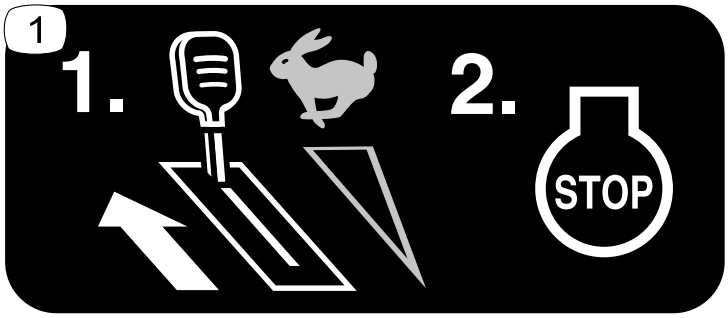

s_decal132-0905

(1) Move the throttle/choke control to the FAST position, then shut off the engine.

Decal Part: 139-2392

s_decal139-2392

Decal Part: 139-2394

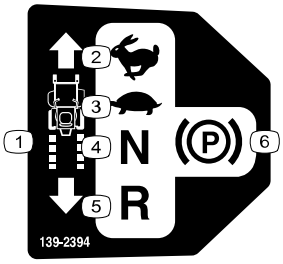

s_decal139-2394

1. Traction controls
2. Fast
3. Slow
4. Neutral
5. Reverse
6. Parking brake

Decal Part: 139-2395

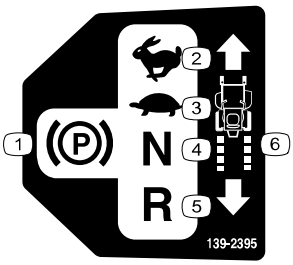

s_decal139-2395

1. Parking brake
2. Fast
3. Slow
4. Neutral
5. Reverse
6. Traction controls

Decal Part: 140-2716

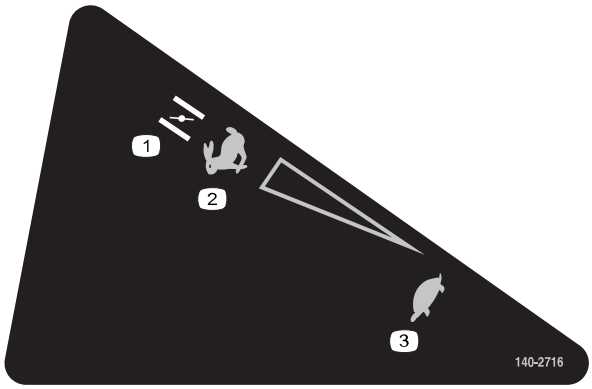

s_decal140-2716

1 Choke

2 Fast

3 Slow

Decal Part: 142-5864

decal142-5864

Decal Part: 144-5288

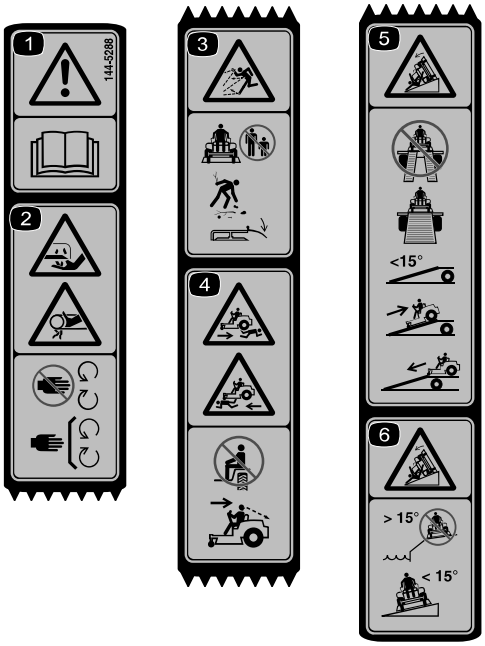

s_decal144-5288

(1) Warning—read the *Operator's Manual*.

(2) Cutting/dismemberment hazard of the fingers or hand—keep hands away from moving parts; keep all guards and shields in place.

(3) Thrown object hazard—keep bystanders away; pick up debris; keep the deflector in place.

(4) Runover hazard—do not carry passengers; look behind you and down when moving in reverse.

(5) Tipping hazard—when loading onto a trailer, do not use dual ramps; only use a singular ramp wide enough for the machine; do not use a ramp with a slope greater than 15°; back up the ramp (in reverse) and drive forward off the ramp.

(6) Tipping hazard—do not use the machine near drop-offs with slopes greater than 15°; only operate across slopes less than 15°.

Note: This machine complies with the industry standard stability test in the static lateral and longitudinal tests with the maximum recommended slope indicated on the decal. Review the instructions for operating the machine on slopes in the Operator's Manual as well as the conditions in which you would operate the machine to determine whether you can operate the machine in the conditions on that day and at that site. Changes in the terrain can result in a change in slope operation for the machine.

Product Overview

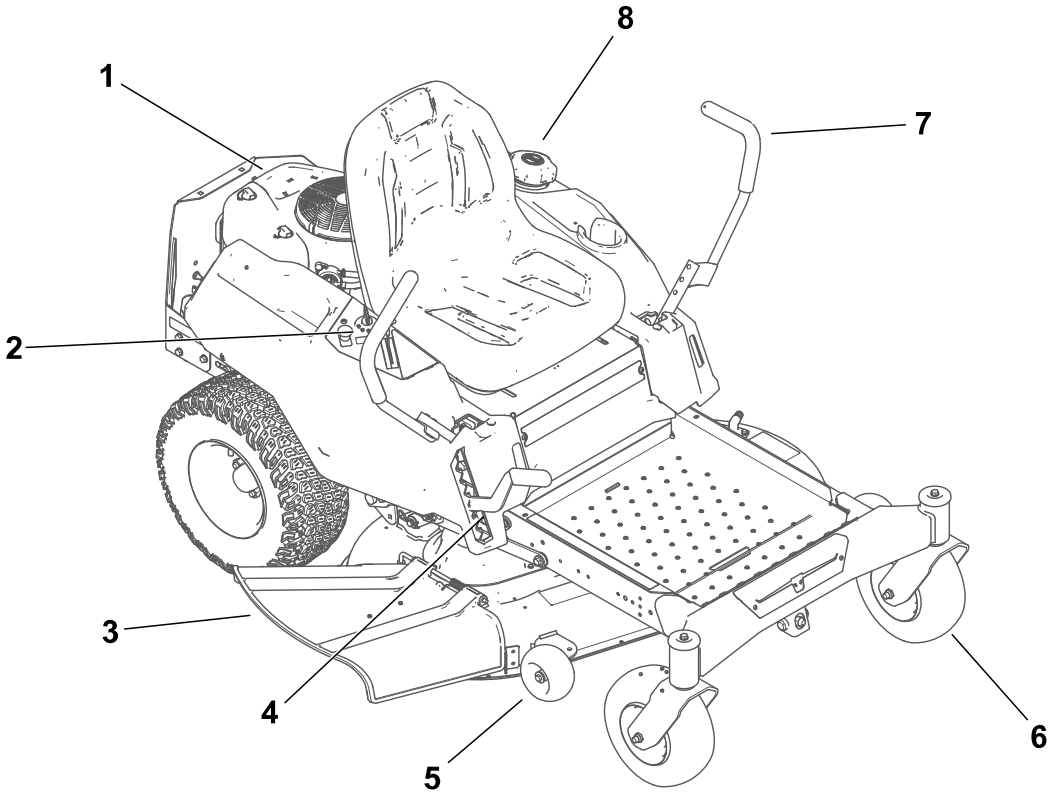

G586658

1 Engine
2 Control panel
3 Deflector
4 Height-of-cut lever
5 Anti-scalp roller
6 Front caster wheel
7 Motion-control lever
8 Fuel-tank cap

Control Panel

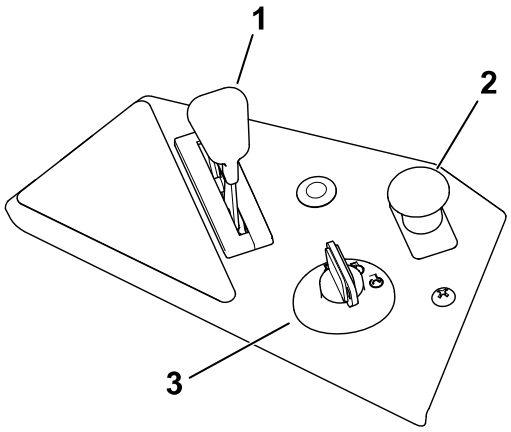

G588779

1 Throttle/choke control

2 Blade-control switch (power takeoff)

3 Key switch

Key Switch

Use the key switch to start or shut off the engine.

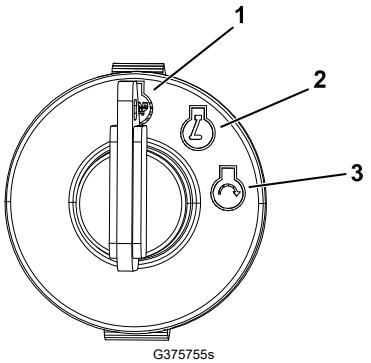

1 Shut off the engine

2 Run the engine

3 Start engine

Throttle/Choke Control

The throttle and choke controls are combined into a single control lever. The throttle controls the engine speed, and it has a continuous-variable setting from the SLOW to FAST position.

Use the choke control to aid in starting a cold engine. Push the lever past the FAST position detent and into the CHOKE position 1.

Note: Do not run a warm engine with the lever in the CHOKE position.

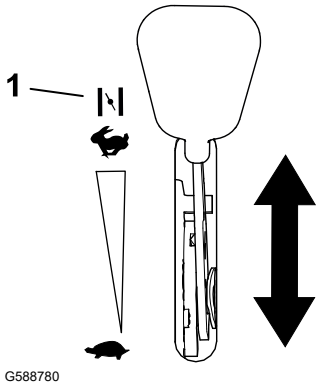

Blade-Control (PTO) Switch

The blade-control switch, represented by a power-takeoff (PTO) symbol, engages and disengages power to the mower blades.

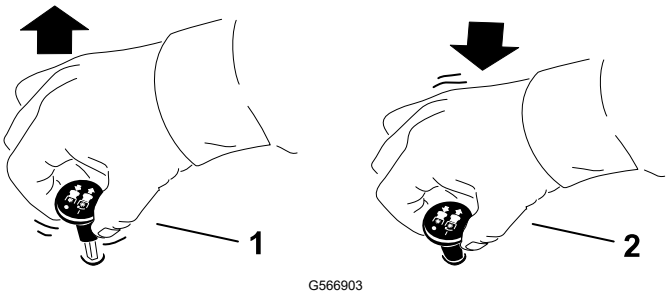

1 On (Engaged)

2 Off (Disengaged)

Motion-Control Levers

Use the motion-control levers to drive the machine forward, reverse, and turn either direction.

Park Position

Move the motion-control levers outward from the center to the PARK position to engage the parking brake when stopping or exiting the machine.

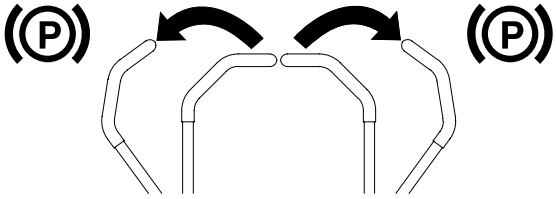

G438246

Height-of-Cut Lever

Use the height-of-cut lever to lower and raise the deck from the seated position. Adjust the height-of-cut only while the machine is not moving.

Fuel-Presence Window

Use the fuel window to verify the presence of fuel in the tank.

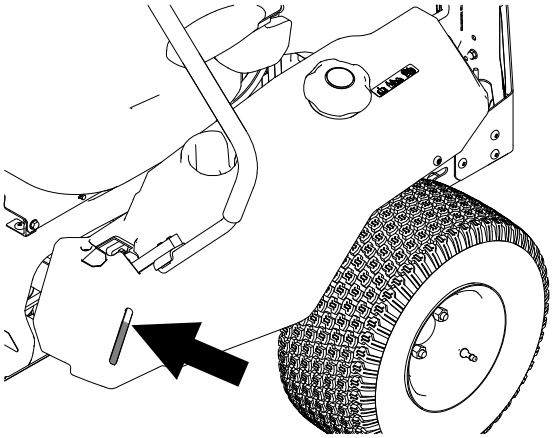

G567032

Specifications

Note: Specifications and design are subject to change without notice.

Cutting width	107 cm (42 inches)
Width with deflector down	135 cm (53 inches)
Width with deflector up	123 cm (48.5 inches)
Length	185 cm (73 inches)
Height	99 cm (39 inches)
Weight	213 kg (469 lb)

Attachments/Accessories

A selection of Toro approved attachments and accessories is available for use with the machine to enhance and expand its capabilities. Contact your Authorized Service Dealer or authorized Toro distributor or go to www.Toro.com for a list of all approved attachments and accessories.

To ensure optimum performance and continued safety certification of the machine, use only genuine Toro replacement parts and accessories.

Before Operation

Before Operation Safety

- Do not allow children or untrained people to operate or service the machine. Local regulations may restrict the age of the operator. The owner is responsible for training all operators and mechanics.
- Inspect the area where you will use the machine and remove all objects that could be thrown or could interfere with the operation of the machine.
- Evaluate the terrain to determine the appropriate equipment and any attachments or accessories required to operate the machine properly and safely.
- Do not carry passengers on the machine.
- Become familiar with the safe operation of the equipment, operator controls, and safety signs.
- Check that operator-presence controls, safety switches, and guards are attached and working properly. Do not operate the machine unless they are functioning properly.
- Wear appropriate clothing, including eye protection; long pants; substantial, slip-resistant footwear; and hearing protection. Tie back long hair and do not wear loose clothing or loose jewelry.
- Do not operate the machine unless all guards and safety devices, such as the deflectors and the entire grass catcher, are in place and functioning properly. Replace worn or deteriorated parts when necessary.
- Shut off the engine, remove the key, and wait for all moving parts to stop before leaving the operator's position. Wait for the machine to cool before servicing, adjusting, fueling, cleaning, or storing it.

WARNING

Contacting the blade can result in serious personal injury.

When you shut off the engine, the blade(s) should stop. If not, stop using your machine immediately and contact an Authorized Service Dealer.

- Before mowing, inspect the machine to ensure that the cutting assemblies are working properly.
- Keep bystanders, particularly children, and pets away from the machine during operation. Shut off the machine and attachment(s) if anyone enters the area.

Before Operation Safety (continued)

Fuel Safety

- Fuel is extremely flammable and highly explosive. A fire or explosion from fuel can burn you and others and can damage property.
  - To prevent a static charge from igniting the fuel, place the container and/or machine directly on the ground before filling, not in a vehicle or on an object.
  - Fill the fuel tank outdoors on level ground, in an open area, and when the engine is cold. Wipe up any fuel that spills.
  - Do not handle fuel when smoking or around an open flame or sparks.
  - Do not remove the fuel cap or add fuel to the tank while the engine is running or hot.
  - If you spill fuel, do not attempt to start the engine. Avoid creating a source of ignition until the fuel vapors have dissipated.
  - Store fuel in an approved container and keep it out of the reach of children.
- Do not overfill the fuel tank. Replace the fuel cap and tighten it securely.
- In certain conditions during fueling, static electricity can be released, causing a spark that can ignite fuel vapors.
- Do not fill containers inside a vehicle or on a truck or trailer bed with a plastic liner. Always place containers on the ground and away from your vehicle before filling.
- Remove the equipment from the truck or trailer and refuel it while it is on the ground. If this is not possible, then refuel from a portable container rather than from a fuel-dispenser nozzle.
- Keep the fuel-dispenser nozzle in contact with the rim of the fuel tank or container opening at all times until fueling is complete. Do not use a nozzle lock-open device.
- Fuel is harmful or fatal if swallowed. Long-term exposure to vapors can cause serious injury and illness.
  - Avoid prolonged breathing of vapors.
  - Keep your hands and face away from the nozzle and the fuel-tank opening.
  - Keep fuel away from your eyes and skin.
- Clean up any spilled fuel.
- Do not store the machine or fuel container where there is an open flame, spark, or pilot light, such as on a water heater or on other appliances.
- Do not operate the machine without the entire exhaust system in place and in proper working condition.

Fuel

Fuel Specifications

Capacity	19 L (5 US gallons)
Type	Unleaded gasoline
Minimum octane rating	87 (US) or 91 (research octane; outside the US)
Ethanol	No more than 10% by volume
Methanol	None
MTBE (methyl tertiary butyl ether)	Less than 15% by volume
Oil	Do not add to the fuel

Use only clean, fresh (no more than 30 days old), fuel from a reputable source.

IMPORTANT

To reduce starting problems, add fuel stabilizer/conditioner to fresh fuel as directed by the fuel-stabilizer/conditioner manufacturer.

Filling the Fuel Tank

1. Park the machine on a level surface.
2. Move the motion-control levers outward to the PARK position.
3. Shut off the engine and remove the key.
4. Clean around the fuel-tank cap and fill the fuel tank.

IMPORTANT

Fill the fuel tank to the bottom of the filler neck. Do not fill the fuel tank completely full.

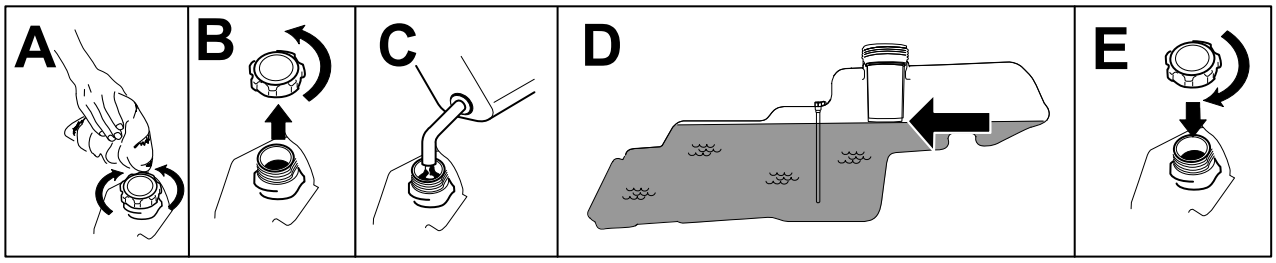

G567079

Performing Daily Maintenance

Before starting the machine each day, perform the Each Use/Daily procedures listed in the Maintenance Schedule.

Break-In Time

New engines take time to develop full power. Mower decks and drive systems have higher friction when new, placing additional load on the engine. Allow 40 to 50 hours of break-in time for new machines to develop full power and best performance.

Safety-Interlock System

The safety-interlock system is designed to prevent the engine from starting unless:

- The blade-control switch (PTO) is disengaged.
- The motion-control levers are in the PARK position.

The safety-interlock system also is designed to shut off the engine whenever the control levers are out of the PARK position and you rise from the seat.

⚠ WARNING ⚠

If the safety-interlock switches are disconnected or damaged, the machine could operate unexpectedly, causing personal injury.

- **Do not tamper with the interlock switches.**
- **Check the operation of the interlock switches daily and replace any damaged switches before operating the machine.**

Safety-Interlock System (continued)

Testing the Safety-Interlock System

Test the safety-interlock system before you use the machine each time. If the safety system does not operate as described below, have an Authorized Service Dealer repair the safety system immediately.

1. Sit on the seat, move the motion-control levers to the PARK position, and move the blade-control switch to the ON position. Try starting the engine; the engine should not crank.

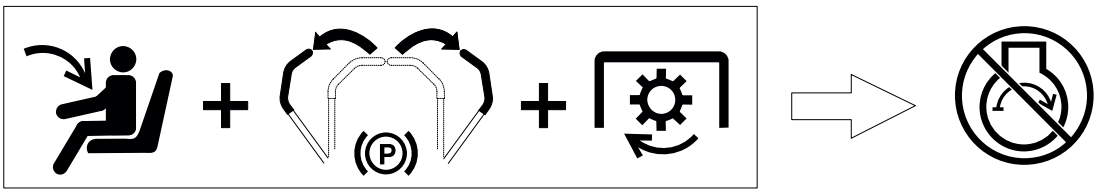

G511504

2. Sit on the seat and move the blade-control switch to the OFF position. Move either motion-control lever to the center, unlocked position. Try starting the engine; the engine should not crank. Repeat with the other motion-control lever.

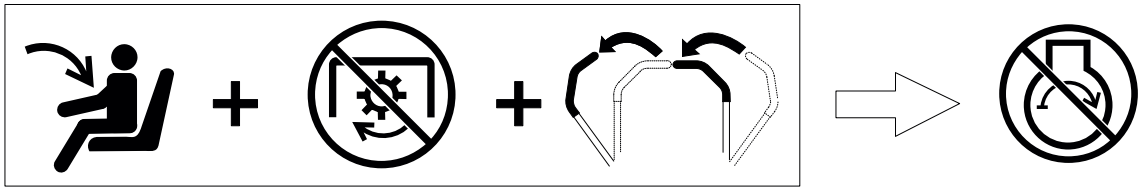

G511505

3. Sit on the seat, move the blade-control switch to the OFF position, and move the motion-control levers to the PARK position. Start the engine. While the engine is running, engage the blade-control switch, and rise slightly from the seat; the engine should shut off within 1 second.

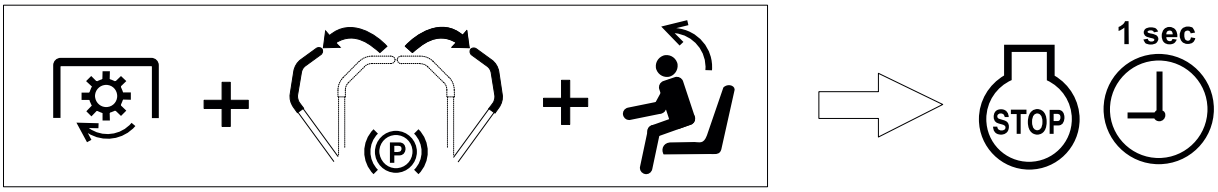

G511506

4. Sit on the seat, move the blade-control switch to the OFF position, and move the motion-control levers to the PARK position. Start the engine. While the engine is running, move the motion-control levers to the center, unlocked position and rise slightly from the seat; the engine should shut off within 1 second.

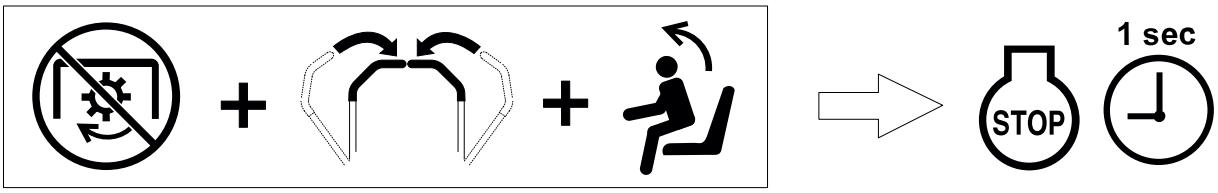

G511507

Positioning the Seat

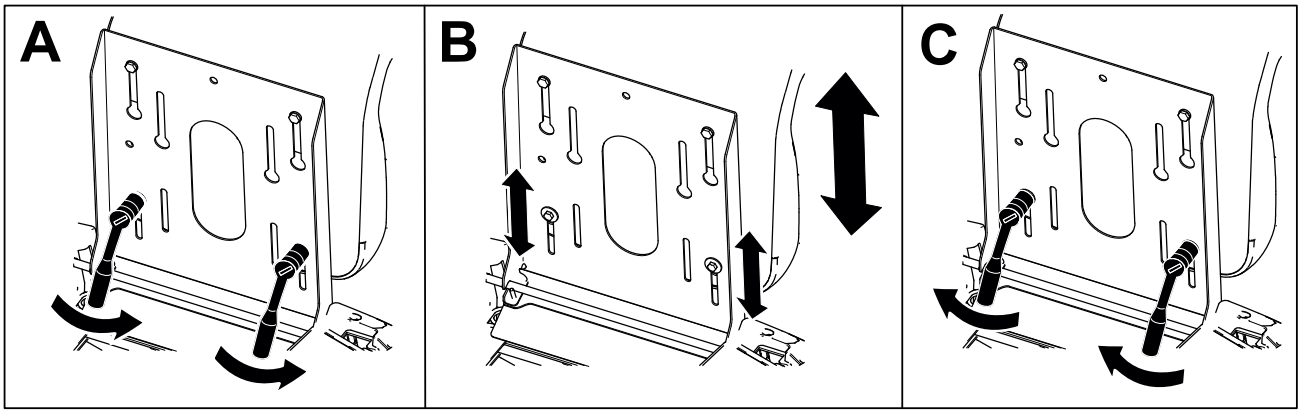

G589150

Adjusting the Motion-Control Lever Height

Adjust the motion-control levers higher or lower for your comfort.

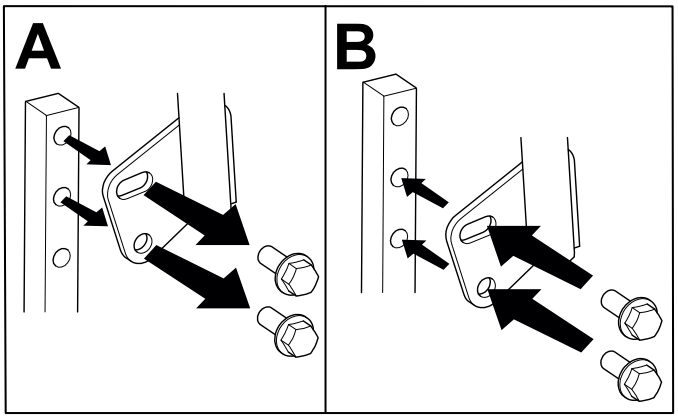

G441093

Adjusting the Motion-Control Lever Tilt

Adjust the motion-control levers forward or rearward for your comfort.

1. Loosen the upper bolt.
2. Loosen the lower bolt enough to pivot the control lever forward or rearward.
3. Tighten both bolts.
4. Repeat the adjustment for the other control lever.

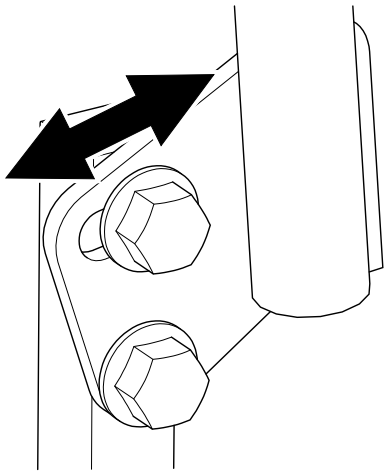

G333846s

During Operation

During Operation Safety

- The owner/operator can prevent and is responsible for accidents that may cause personal injury or property damage.
- Use your full attention while operating the machine. Do not engage in any activity that causes distractions; otherwise, injury or property damage may occur.
- Do not operate the machine while ill, tired, or under the influence of alcohol or drugs.
- Do not operate the machine unless all guards and safety devices, such as the deflectors and the entire grass catcher, are in place and functioning properly. Replace worn or deteriorated parts with genuine Toro parts when necessary.
- Operating engine parts, especially the muffler, can become extremely hot. Severe burns can occur on contact and debris, such as leaves, grass, brush, etc. can catch fire. Keep the engine area free from debris and excessive oil and grease.
- Operate the engine only in well-ventilated areas. Exhaust gases contain carbon monoxide, which is lethal if inhaled.
- Operate the machine only in good visibility and appropriate weather conditions. Do not operate the machine when there is the risk of lightning.
- Start the engine with your feet well away from the blades.
- Keep your hands and feet away from moving parts. Keep clear of the discharge opening.
- Keep away from holes, ruts, bumps, rocks, and other hazards. Use care when approaching blind corners, shrubs, trees, tall grass or other objects that may hide obstacles or obscure your view.
- Do not mow with the discharge deflector raised, removed, or altered unless there is a grass-collection system or mulch kit in place and working properly.
- Do not mow in reverse unless it is absolutely necessary. Always look down and behind you before moving the machine in reverse.
- Stop the blades whenever you are not mowing. Slow down the machine, and use caution when crossing surfaces other than grass or when transporting the machine to and from the operating area.
- Be aware of the mower discharge path and direct the discharge away from others. Avoid discharging material against a wall or obstruction because the material may ricochet back toward you.
- If the machine strikes an object or starts to vibrate, immediately shut off the engine, remove the key, and wait for all moving parts to stop before examining the machine for damage. Make all necessary repairs before resuming operation.
- Slow down and use caution when making turns and crossing roads and sidewalks with the machine. Always yield the right-of-way.
- Never leave a running machine unattended.
- Before you leave the operating position, do the following:
  - Park the machine on a level surface.
  - Disengage the power takeoff and lower the attachments.

During Operation Safety (continued)

  - Engage the parking brake.
  - Shut off the engine and remove the key.
  - Wait for all moving parts to stop.

- Never carry children on the machine.
- Do not carry children on the machine, even when the blades are not moving. Children could fall off and be seriously injured or prevent you from safely operating the machine. Children who have been given rides in the past could appear in the operating area without warning and be run over or backed over by the machine.
- Children are often attracted to the machine and the mowing activity. Never assume that children will remain where you last saw them.
- Keep children out of the operating area and under the watchful care of a responsible adult other than the operator.
- Be alert and shut off the machine if children enter the operating area.
- Before backing up or turning the machine, look down and all around for small children.
- Do not use the machine as a towing vehicle unless it has a hitch installed. Attach towed equipment to the machine only at the hitch point.
- Use only accessories and attachments approved by The Toro® Company.

Slope Safety

- Slopes are a major factor related to loss of control and rollover accidents, which can result in severe injury or death. The operator is responsible for safe slope operation. Operating the machine on any slope requires extra caution. Before using the machine on a slope, do the following:
  - Review and understand the slope instructions in the manual and on the machine.
  - Use an angle indicator to determine the approximate slope angle of the area.
  - Never operate on slopes greater than 15°.
  - Evaluate the site conditions of the day to determine if the slope is safe for machine operation. Use common sense and good judgment when performing this evaluation. Changes in the terrain, such as moisture, can quickly affect the operation of the machine on a slope.
- Identify hazards at the base of the slope. Do not operate the machine near drop-offs, ditches, embankments, water, or other hazards. The machine could suddenly roll over if a wheel goes over the edge or the edge collapses. Keep a safe distance (twice the width of the machine) between the machine and any hazard. Use a walk-behind machine or a hand trimmer to mow the grass in these areas.

During Operation Safety (continued)

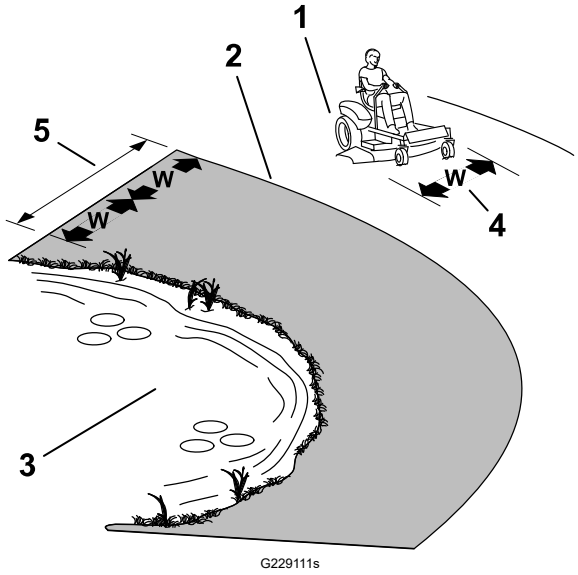

(1) Safe Zone—use the machine here on slopes less than 15° or flat areas.

(2) Danger Zone—use a walk-behind mower and/or a hand trimmer on slopes greater than 15° and near drop-offs or water.

(3) Water

(4) W = Width of the machine

(5) Keep a safe distance (twice the width of the machine) between the machine and any hazard.

- Avoid starting, stopping, or turning the machine on slopes. Avoid making sudden changes in speed or direction; turn slowly and gradually.
- Do not operate a machine under any conditions where traction, steering, or stability is in question. Be aware that operating the machine on wet grass, across slopes, or downhill may cause the machine to lose traction. Loss of traction to the drive wheels may result in sliding and a loss of braking and steering. The machine can slide even if the drive wheels are stopped.
- Remove or mark obstacles such as ditches, holes, ruts, bumps, rocks, or other hidden hazards. Tall grass can hide obstacles. Uneven terrain could overturn the machine.
- Use extra care while operating with accessories or attachments, such as grass-collection systems. These can change the stability of the machine and cause a loss of control. Follow directions for counterweights.
- If possible, keep the deck lowered to the ground while operating on slopes. Raising the deck while operating on slopes can cause the machine to become unstable.

Towing Safety

- Do not attach towed equipment except at the hitch point.
- Do not use the machine as a towing vehicle unless it has a hitch installed.
- Do not exceed the maximum gross towing weight.
- Never allow children or others near the towed equipment.
- On slopes, the weight of the towed equipment may cause loss of traction, increased risk of rollover, and loss of control. Reduce the towed weight and slow down.
- The stopping distance may increase with the weight of a towed load. Travel slowly and allow extra distance to stop.
- Make wide turns to keep the attachment clear of the machine.

Starting the Engine

Start the engine as shown.

Note: A warm or hot engine may not require choking.

IMPORTANT

Do not engage the starter for more than 5 seconds at a time; otherwise, you can damage the starter motor. If the engine fails to start, wait 1 minute before operating the engine starter again.

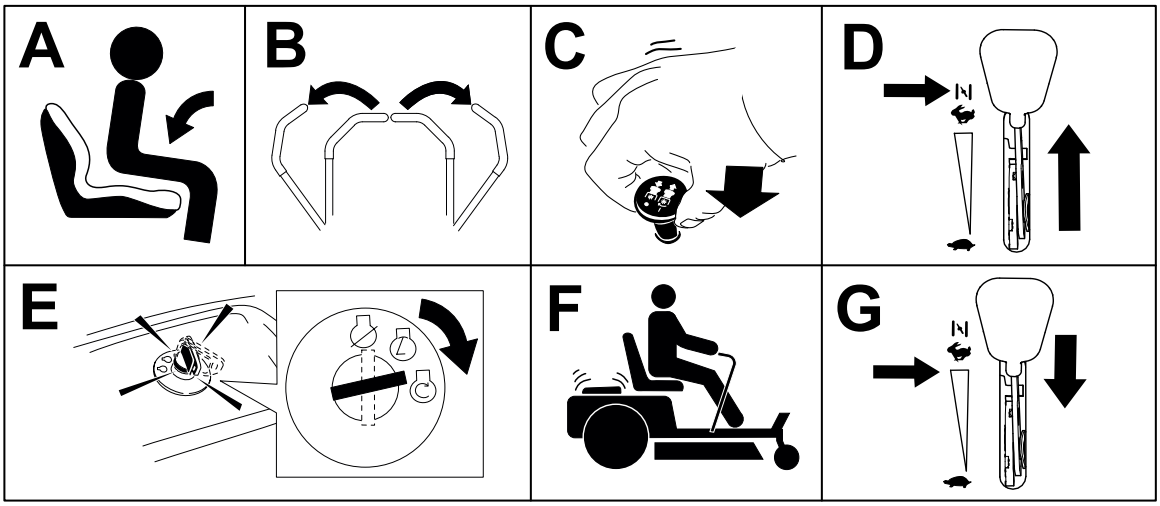

G589322

Shutting Off the Engine

1. Disengage the blades by moving the blade-control switch to the OFF position.
2. Move the motion-control levers outward to the PARK position.
3. Move the throttle control to the FAST position and let the engine idle for 1 minute.
4. Turn the key to the OFF position and remove the key.

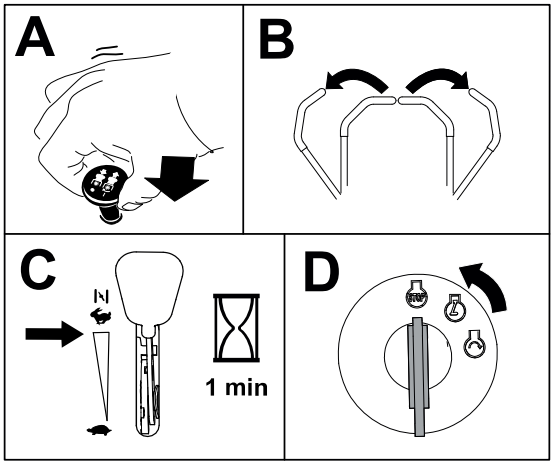

G589359

CAUTION

Children or bystanders may be injured if they move or attempt to operate the machine while it is unattended.

Always remove the key and engage the parking brake when leaving the machine unattended.

Driving the Machine

CAUTION

Positioning one lever too far in front of the other causes the machine to spin very rapidly. As a result, you may lose control of the machine, causing personal injury to you and damage to the machine.

Slow down the machine before making sharp turns.

The drive wheels turn independently, powered by motors on each axle. You can turn 1 side in reverse while you turn the other forward, causing the machine to spin rather than turn. This greatly improves the machine maneuverability but may require some time for you to adapt to how it moves.

1. Move the motion-control levers down to the center, unlocked position.

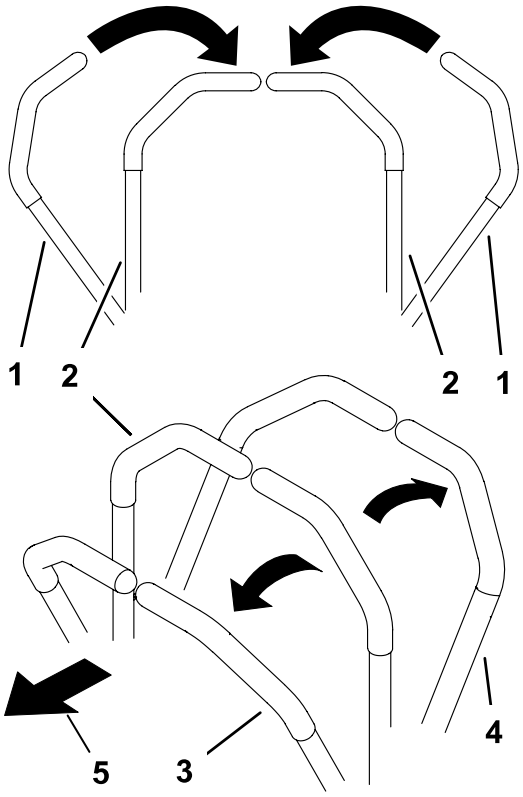

G426843s

1. Motion-control levers—PARK position
2. Center, unlocked position
3. Forward
4. Reverse
5. Front of the machine

Driving the Machine (continued)

2. Slowly push the motion-control levers forward or rearward. Move 1 lever farther than the other lever to turn.

   Note: The farther you move the motion-control levers, the faster the machine moves in that direction.

3. To stop, pull the motion-control levers back to the NEUTRAL position.

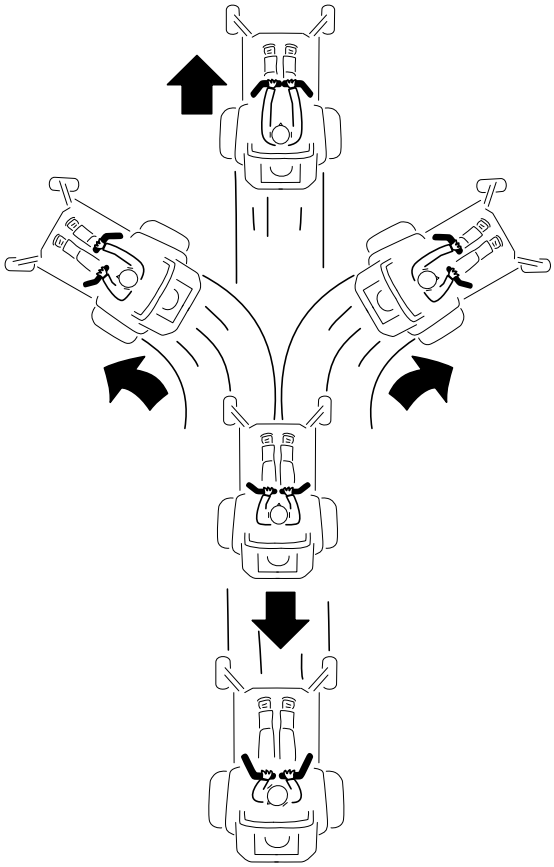

G397314s

Operating the Mower Blade-Control Switch (PTO)

DANGER

The rotating blades under the mower deck are dangerous. Blade contact will cause serious injury or death.

Do not put your hands or feet under the mower or mower deck when the blades are engaged.

DANGER

An uncovered discharge opening allows objects to be thrown toward you or bystanders. Also, contact with the blade could occur. Thrown objects or blade contact will cause serious injury or death.

Do not operate the mower with the discharge deflector raised, removed, or altered unless a grass collection system or mulch kit is in place and working properly.

---

1. Move the throttle control to the FAST position.

Operating the Mower Blade-Control Switch (PTO) (continued)

2. Engage the blade-control switch.

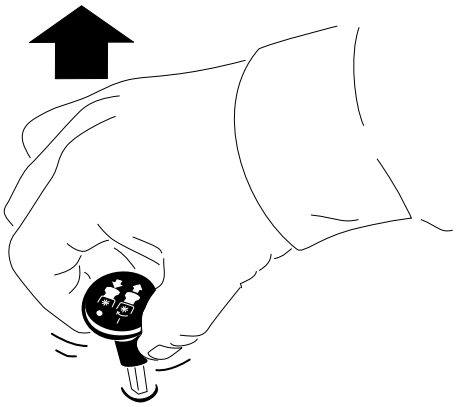

G567276

3. Mow as desired.
4. Disengage the blade-control switch.

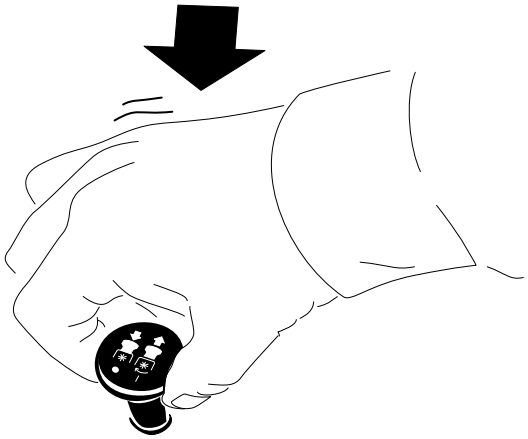

G567275

Side Discharge

The hinged grass deflector disperses clippings to the side and down toward the turf.

⚠ DANGER ⚠

Without the grass deflector, discharge cover, or complete grass catcher assembly mounted in place, you and bystanders are exposed to blade contact and thrown debris. Contact with rotating mower blade(s) and thrown debris will cause injury or death.

- **Do not remove the grass deflector from the machine, because the grass deflector routes material down toward the turf. If the grass deflector is ever damaged, replace it immediately.**
- **Never put your hands or feet under the mower.**
- **Never try to clear the discharge area or mower blades unless the power takeoff (PTO) is off. Rotate the key to the OFF position and remove the key.**

Adjusting the Height of Cut

Use the height-of-cut lever to the right of the operating position to adjust the height of cut from 38 to 114 mm (1-1/2 to 4-1/2 inches) in 13 mm (1/2 inch) increments.

Note: The transport position is the highest height-of-cut position.

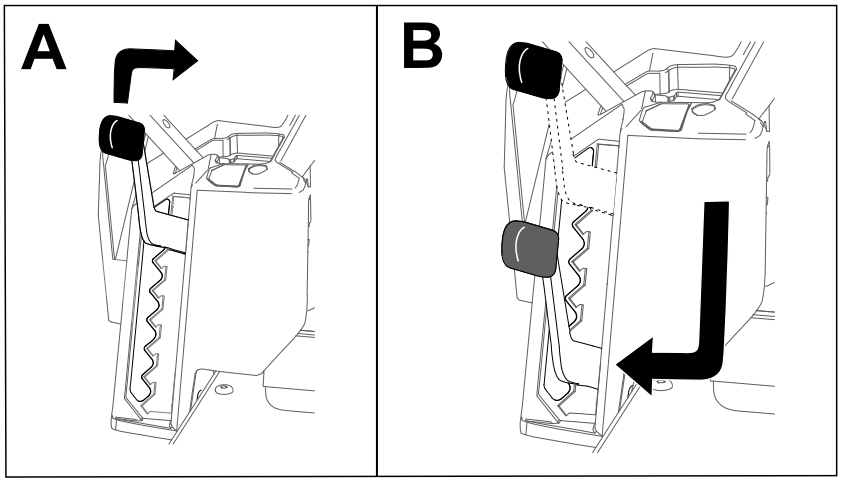

G441492

Adjusting the Anti-Scalp Rollers

Whenever you change the height of cut, adjust the height of the anti-scalp rollers.

1. Park the machine on a level surface, disengage the blade-control switch, and move the motion-control levers outward to the PARK position.
2. Shut off the engine, remove the key, and wait for all moving parts to stop before leaving the operating position.
3. Adjust the anti-scalp rollers to match the closest height-of-cut position.

   Note: Adjust the anti-scalp rollers so that the rollers do not touch the ground in normal, flat mowing areas.

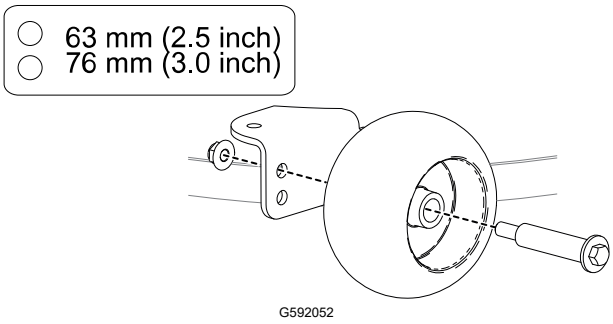

Operating Tips

Maximize Air Circulation

For best mowing and maximum air circulation, operate the engine at the FAST position. Air circulation is required to thoroughly cut grass clippings, so do not set the height of cut so low as to totally surround the mower deck in uncut grass. Always try to have 1 side of the mower deck free from uncut grass, which allows air to be drawn into the mower deck.

Avoid Cutting Too Low

When mowing uneven ground, raise the cutting height to slightly higher than normal to avoid scalping the turf. However, the cutting height used in the past is generally the best one to use. When cutting grass longer than 15 cm (6 inches) tall, you may want to cut the lawn twice to ensure an acceptable quality of cut.

Cut a Third of the Grass Blade

It is best to cut only about a third of the grass blade. Cutting more than that is not recommended unless grass is sparse, or it is late fall when grass grows more slowly.

Alternate the Mowing Direction

Alternate the mowing direction to keep the grass standing straight. This also helps disperse clippings, which enhances decomposition and fertilization.

Operating Tips (continued)

Mowing Frequency

Grass grows at different rates at different times of the year. To maintain the same cutting height, mow more often in early spring. As the grass growth rate slows in mid summer, mow less frequently. If you cannot mow for an extended period, first mow at a high cutting height, then mow again 2 days later at a lower height setting.

Mow at Slower Ground Speeds

In certain conditions, mowing at a slower ground speed can improve cut quality.

Avoid Grass Clumps

If you must stop driving forward while mowing, a clump of grass clippings may drop onto your lawn. To avoid this, move onto a previously cut area with the blades engaged or disengage the mower deck while moving forward.

Keep the Underside of the Mower Deck Clean

Clean clippings and dirt from the underside of the mower deck after each use. Grass and dirt build-up will eventually decrease the cutting quality.

Maintain the Blades

Maintain a sharp blade throughout the cutting season because a sharp blade cuts cleanly without tearing or shredding the grass blades. Tearing and shredding turns grass brown at the edges, which slows growth and increases the chance of disease. Check the mower blades after each use for sharpness, and for any wear or damage. File down any nicks and sharpen the blades as necessary. If a blade is damaged or worn, replace it.

After Operation

After Operation Safety

- Park the machine on a level surface, disengage the drives, engage the parking brake, shut off the engine, remove the key, and wait for all moving parts to stop before leaving the operator’s position.
- Wait for the machine to cool before servicing, adjusting, fueling, cleaning, or storing it.
- Clean grass, leaves, excessive grease and oil, and other debris from the mower deck, muffler, drives, grass catcher, and engine area to help prevent fires.
- Close the fuel-shutoff valve (if equipped) before storing or transporting the machine.
- Use full-width ramps for loading the machine into a trailer or truck.
- Tie the machine down securely using straps, chains, cable, or ropes. Both front and rear straps should be directed down and outward from the machine.

Cleaning the Machine

Clean the machine after each use.

1. Park the machine on a level surface, disengage the blade-control switch, and move the motion-control levers outward to the PARK position.
2. Shut off the engine, remove the key, and wait for all moving parts to stop before leaving the operating position.
3. Clean grass and debris from cutting unit, muffler, drives, grass catcher, and engine. Use compressed air when possible.

IMPORTANT

You can wash the machine with a mild detergent and water. Do not pressure wash the machine. Avoid excessive use of water, especially near the control panel, under the seat, and around the engine, hydraulic pumps, and motors.

Hauling the Machine

Use a heavy-duty trailer or truck to haul the machine. Use a full-width ramp. Ensure that the trailer or truck has all the necessary brakes, lighting, and marking as required by law. Please carefully read all the safety instructions. Knowing this information could help you or bystanders avoid injury. Refer to your local ordinances for trailer and tie-down requirements.

WARNING

Driving on the street or roadway without turn signals, lights, reflective markings, or a slow-moving-vehicle emblem is dangerous and can lead to accidents causing personal injury.

Do not drive the machine on a public street or roadway.

Trailer Requirements

WARNING

Loading a machine onto a trailer or truck increases the possibility of tip-over and could cause serious injury or death.

- **Use only a full-width ramp; do not use individual ramps for each side of the machine.**
- **Do not exceed a 15-degree angle between the ramp and the ground or between the ramp and the trailer or truck.**
- **Ensure that the length of ramp is at least 4 times as long as the height of the trailer or truck bed to the ground.**

Hauling the Machine (continued)

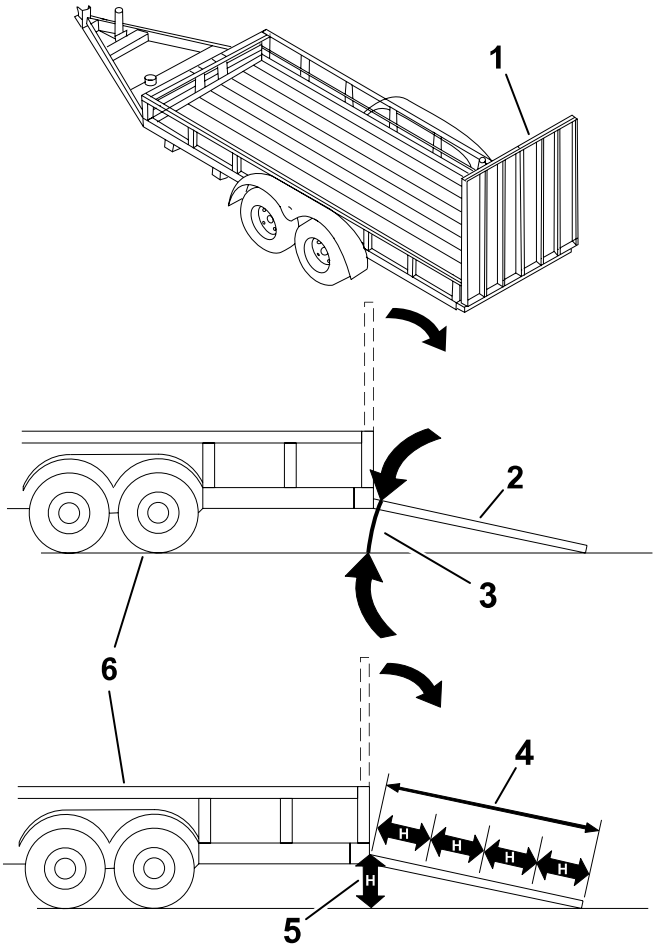

G027996s

(1) Full-width ramp(s) in stowed position

(2) Side view of full-width ramp in loading position

(3) Not greater than 15 degrees

(4) Ramp is at least 4 times as long as the height of the trailer or truck bed to the ground

(5) H = height of the trailer or truck bed to the ground

(6) Trailer

Loading the Machine

WARNING

Loading a machine onto a trailer or truck increases the possibility of tip-over and could cause serious injury or death.

- **Use extreme caution when operating a machine on a ramp.**
- **Back the machine up the ramp and drive it forward down the ramp.**
- **Avoid sudden acceleration or deceleration while driving the machine on a ramp as this could cause a loss of control or a tip-over situation.**

---

1. If using a trailer, connect it to the towing vehicle and connect the safety chains.
2. If applicable, connect the trailer brakes.
3. Lower the ramp, ensuring that the angle between the ramp and the ground does not exceed 15 degrees.

Hauling the Machine (continued)

4. Back the machine up the ramp.
5. Shut off the engine, remove the key, and move the motion-control levers outward to the PARK position.

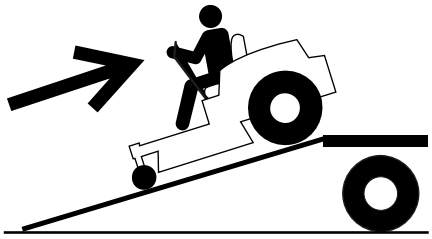

G414592

6. Tie down the machine using straps, chains, cable, or ropes. Refer to local regulations for tie-down requirements.

   Note: Direct the straps down and away from the machine.

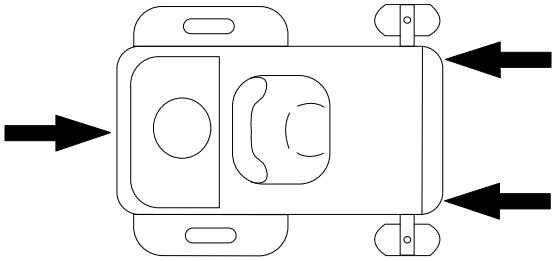

G451313

Unloading the Machine

1. Lower the ramp, ensuring that the angle between the ramp and the ground does not exceed 15 degrees.
2. Drive the machine forward down the ramp.

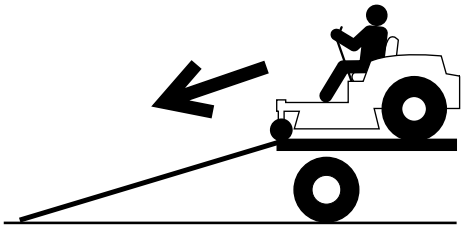

G414593

Maintenance Safety

- If you leave the key in the switch, someone could accidently start the engine and seriously injure you or other bystanders. Remove the key from the switch before you perform any maintenance.
- Before you leave the operator's position, do the following:
  - Park the machine on a level surface.
  - Disengage the drives.
  - Engage the parking brake.
  - Shut off the engine and remove the key.
  - Wait for the machine to cool before performing maintenance.
- Do not allow untrained personnel to service the machine.
- Keep your hands and feet away from moving parts or hot surfaces. If possible, do not make adjustments with the engine running.
- Keep all guards, shields, switches, and all safety devices in place and in proper working condition. Frequently check for worn or deteriorating components and replace them with genuine Toro parts when necessary.
- Carefully release pressure from components with stored energy.

WARNING

Removing or modifying original equipment, parts, and/or accessories may alter the warranty, controllability, and safety of the machine. Making unauthorized modifications to the original equipment or failing to use original Toro parts could lead to serious injury or death.

- Check the parking brake operation frequently. Adjust and service it as required.
- Never tamper with safety devices. Check their proper operation regularly.
- Clean grass, leaves, excessive grease and oil, and other debris from the cutting unit, muffler, drives, grass catcher, and engine compartment to prevent fires.
- Clean up oil or fuel spills and remove fuel-soaked debris.
- Do not rely solely on mechanical or hydraulic jacks to support the machine. Use adequate jack stands.
- Keep all parts in good working condition and all hardware tightened, especially the blade-attachment hardware.

- To ensure optimum performance, use only genuine Toro replacement parts and accessories. Replacement parts and accessories made by other manufacturers could be dangerous.

Recommended Maintenance Schedule

Maintenance Service Interval	Maintenance Procedure
After the first 5 hours	Change the engine oil.
Before each use or daily	Check the safety-interlock system.
	Check the engine-oil level.
	Clean the cooling system (more often in dusty, dirty conditions).
	Inspect the blades.
	Inspect the grass deflector for damage.
After each use	Clean grass and debris from the cutting unit, muffler, drives, grass catcher, and engine.
	Clean the mower-deck housing.
Every 25 hours	Grease the caster wheel bearings (more often in sandy soil conditions).
	Clean the air-cleaner foam element (more often in dusty, dirty conditions).
	Check the tire pressure.
	Check the belts for wear or cracks.
Every 100 hours or yearly, whichever comes first	Replace the paper air-cleaner element (more often in dirty or dusty conditions).
	Change the engine oil and oil filter (more often in dirty or dusty conditions).
Before storage	Charge the battery and disconnect the battery cables.
	Perform all maintenance procedures listed above before storage.
	Paint any chipped surfaces.
Yearly	Replace the air-cleaner paper and foam elements (more often in dusty, dirty conditions).
	Change the spark plug(s).
	Replace the in-line fuel filter.

IMPORTANT

Refer to your engine owner's manual for additional maintenance procedures.

Pre-Maintenance Procedures

Moving a Non-Functioning Machine

1. Park the machine on a level surface, disengage the blade-control switch, and move the motion-control levers outward to the PARK position.
2. Shut off the engine and wait for all moving parts to stop before leaving the operating position.
3. Locate the bypass levers (1) on the frame on both sides of the engine.

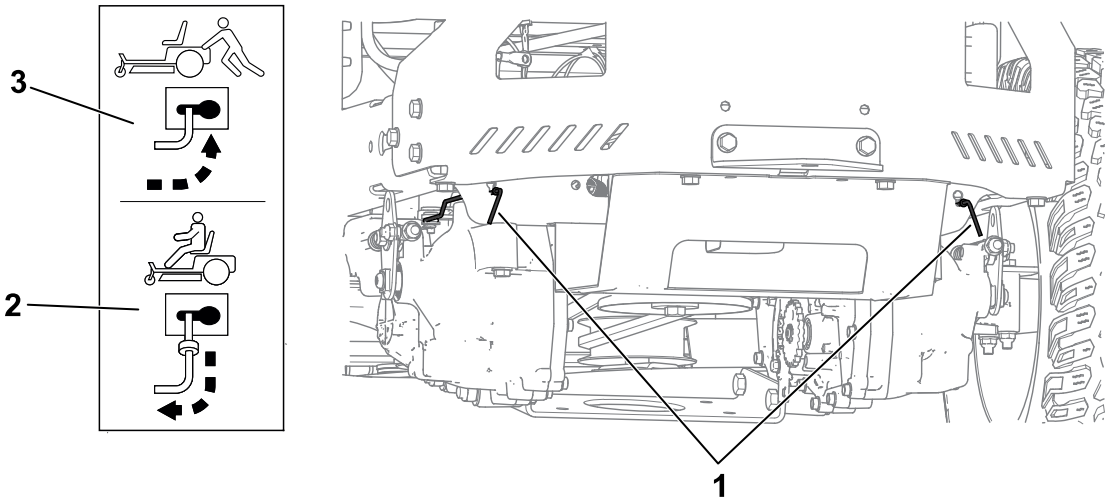

G595033

4. Move both bypass levers forward through the slotted hole and over to lock them in place (3).

WARNING

Contact with hot surfaces may cause personal injury.

Keep your hands, feet, face, clothing and other body parts away the engine, muffler and other hot surfaces.

WARNING

The machine could unintentionally move while the bypass levers are locked forward in the slot and injure you or bystanders.

Lock the bypass levers rearward after moving the machine.

Moving a Non-Functioning Machine (continued)

5. Disengage the parking brake by moving both motion-control levers to the center, unlocked position.

   Note: Do not start the machine.

6. Move the machine as required.

IMPORTANT

Always push the machine by hand. Do not tow the machine, because towing may damage it.

7. Move the motion-control levers outward to the PARK position.
8. Move both bypass levers rearward and over through the slotted hole to lock them in place (2).

Raising the Machine

Use jackstands to support the machine when you raise it.

WARNING

Supporting the machine on the lower muffler shield may damage the shield and cause the machine to fall, injuring you or bystanders.

Do not use the lower muffler shield to lift or support the machine.

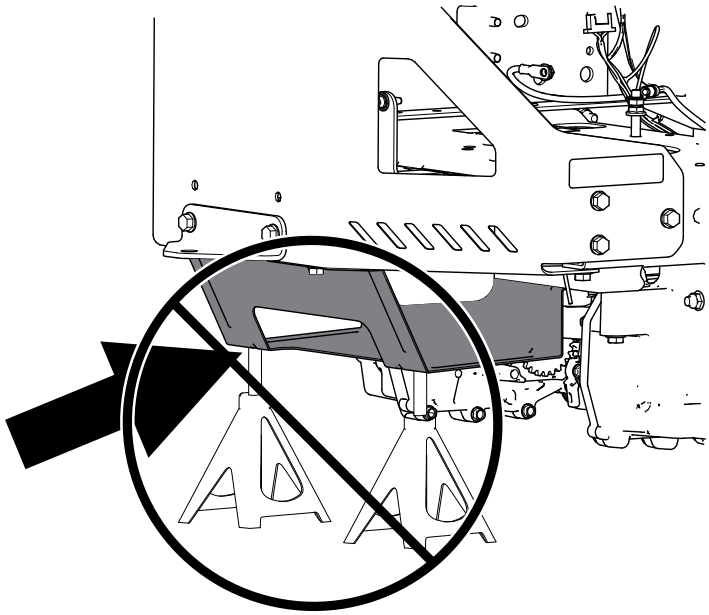

G595034

Lubrication

Greasing the Bearings

1. Park the machine on a level surface, disengage the blade-control switch, and move the motion-control levers outward to the PARK position.
2. Shut off the engine and wait for all moving parts to stop before leaving the operating position.
3. Clean the grease fittings with a rag.

   Note: Scrape any paint off the front of the fittings.
4. Connect a grease gun to each fitting.
5. Pump grease into the fittings until grease begins to ooze out of the bearings.
6. Wipe up any excess grease.

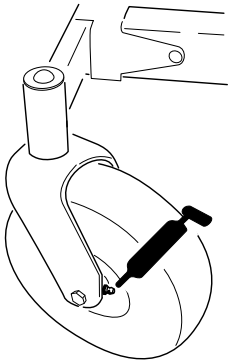

G451140

Engine Maintenance

Engine Safety

- Keep your hands, feet, face, other body parts, and clothing away from the muffler and other hot surfaces. Wait for the engine to cool before performing maintenance.
- Do not change the engine governor speed or overspeed the engine.

Air Cleaner Service

Removing the Air-Cleaner Elements

1. Park the machine on a level surface, disengage the blade-control switch, and move the motion-control levers outward to the PARK position.
2. Shut off the engine and wait for all moving parts to stop before leaving the operating position.
3. Clean around the air-cleaner cover to prevent dirt from getting into the engine and causing damage.
4. Rotate the latches counterclockwise and remove the cover.

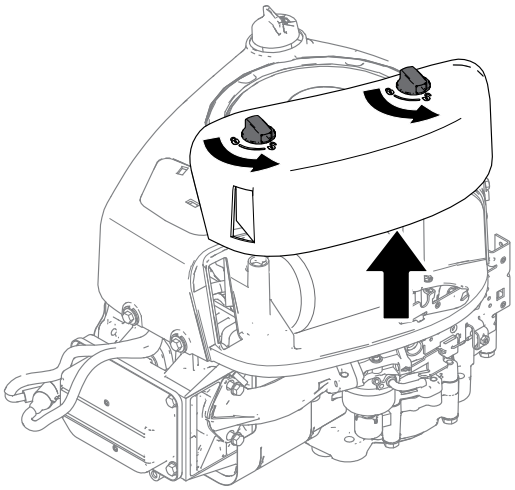

G374186s

5. Lift the end of the filter and remove it from the air intake.

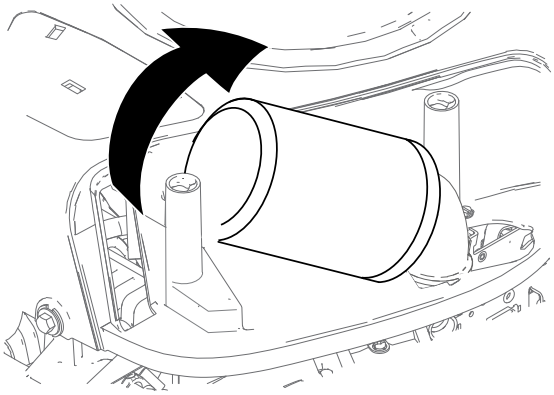

G374187s

Air Cleaner Service (continued)

6. Separate the foam and paper elements.

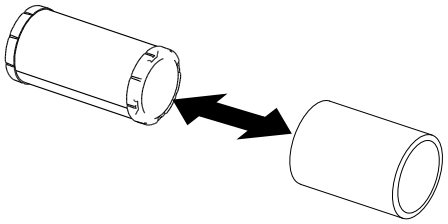

G451151

Servicing the Foam Element

1. Wash the foam element in liquid soap and warm water. When the element is clean, rinse it thoroughly.
2. Dry the element by squeezing it in a clean cloth.

IMPORTANT

Replace the foam element if it is torn or worn.

3. Lightly oil the foam element using new engine oil and squeeze out any excess oil.

Servicing the Paper Air-Cleaner Element

1. Clean the paper element by tapping it gently to remove dust.

   Note: If it is very dirty, replace the paper element with a new one.
2. Inspect the element for tears, an oily film, or damage to the rubber seal.
3. Replace the paper element if it is damaged.

IMPORTANT

Do not clean the paper filter.

Installing the Air-Cleaner Elements

1. Install the foam pre-cleaner element over the paper element.

   Note: Ensure that you do not damage the elements.

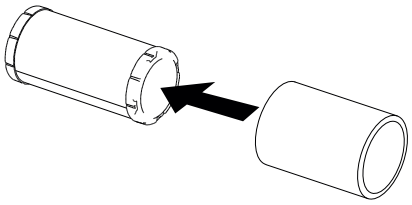

G451670

Air Cleaner Service (continued)

2. Install the air-cleaner elements onto the air-cleaner base.

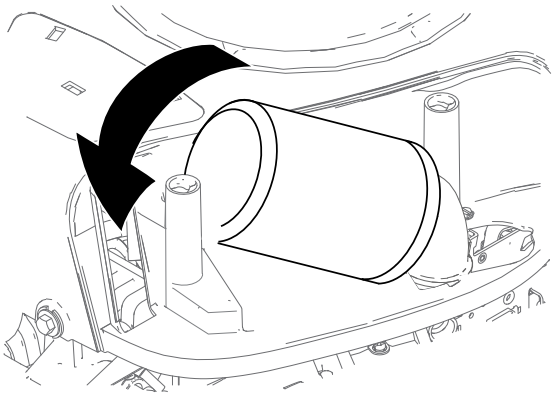

G589624

3. Install the cover and secure it with the latches.

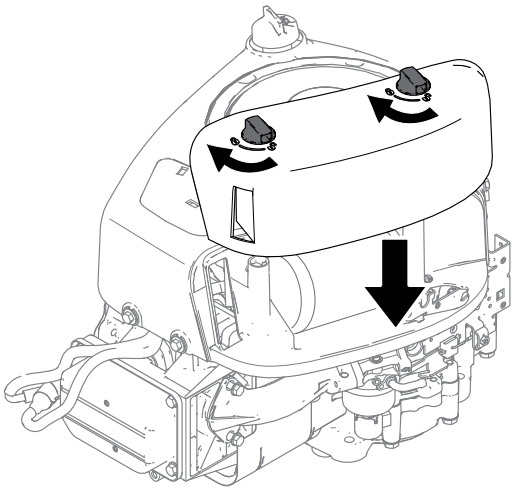

G589623

Engine-Oil Service

Engine-Oil Specifications

Oil Type	Detergent oil (including synthetic) of API service SJ or higher
Crankcase Capacity	1.4 L (47 fl oz) with oil filter; 1.3 L (44 fl oz) without oil filter
Viscosity	See the following table

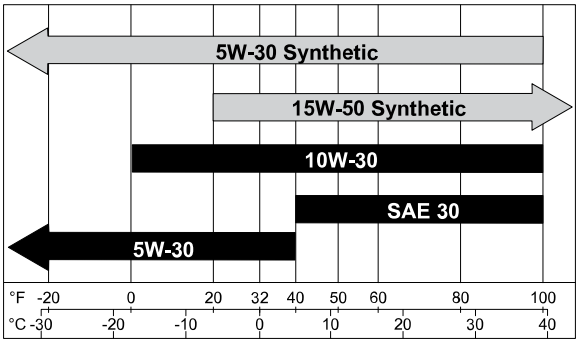

Engine-Oil Service (continued)

Checking the Engine-Oil Level

1. Park the machine on a level surface, disengage the blade-control switch, and move the motion-control levers outward to the PARK position.
2. Shut off the engine, remove the key, and wait for all moving parts to stop before leaving the operating position.
3. Wait for the engine to cool so that the oil has had time to drain into the sump.
4. To keep dirt, grass clippings, etc., out of the engine, clean the area around the oil-fill cap and dipstick before removing it.
5. Check the engine-oil level as shown.

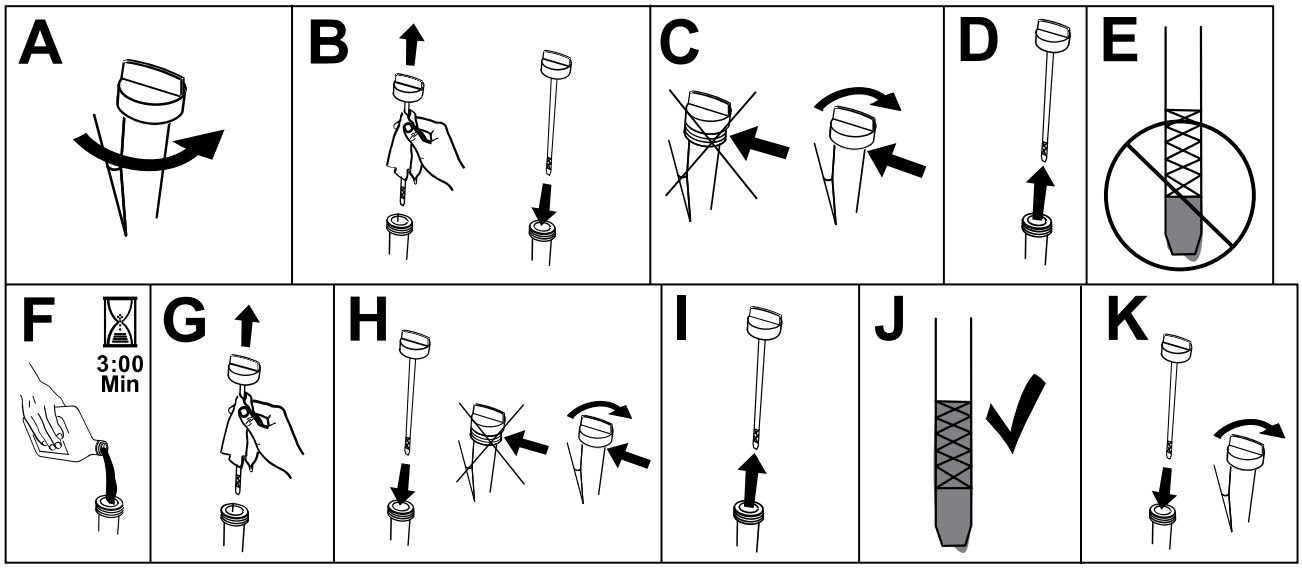

G373146s

IMPORTANT

If you overfill or underfill the engine crankcase with oil and run the engine, you may damage the engine.

Changing the Engine Oil and Oil Filter

1. Park the machine on a level surface to ensure that the oil drains completely.
2. Disengage the blade-control switch, and move the motion-control levers outward to the PARK position.
3. Shut off the engine, remove the key, and wait for all moving parts to stop before leaving the operating position.
4. Drain the oil from the engine.

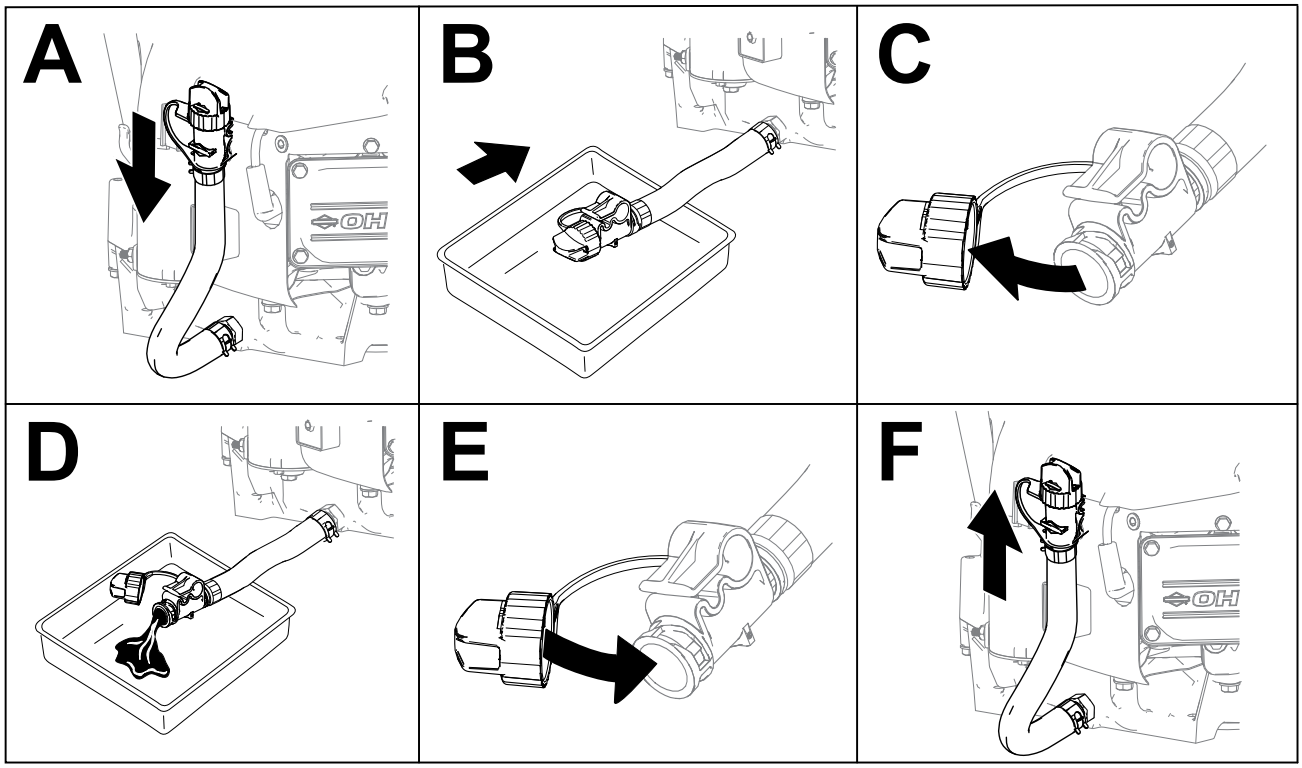

G399817s

5. Change the engine-oil filter.

   Note: Ensure that the oil-filter gasket touches the engine and then turn the filter an extra 3/4 turn.

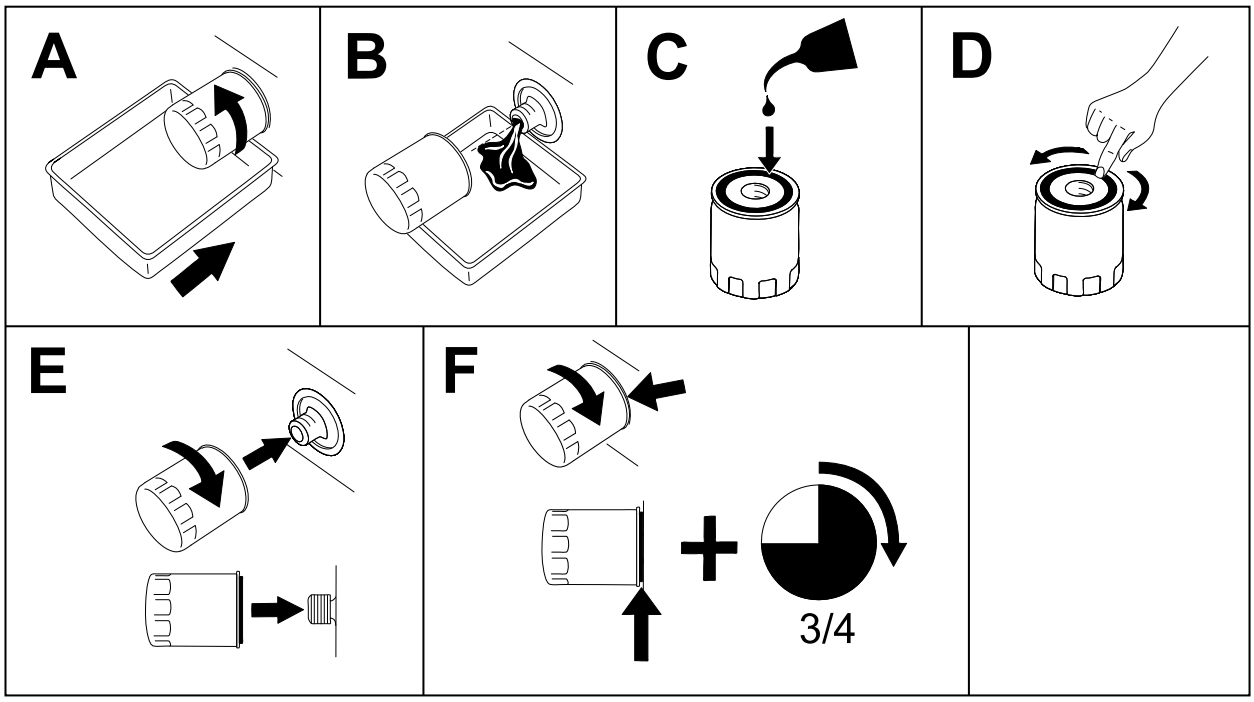

G398545s

6. Slowly pour approximately 80% of the specified oil into the filler tube and slowly add the additional oil to bring it to the Full mark.

Engine-Oil Service (continued)

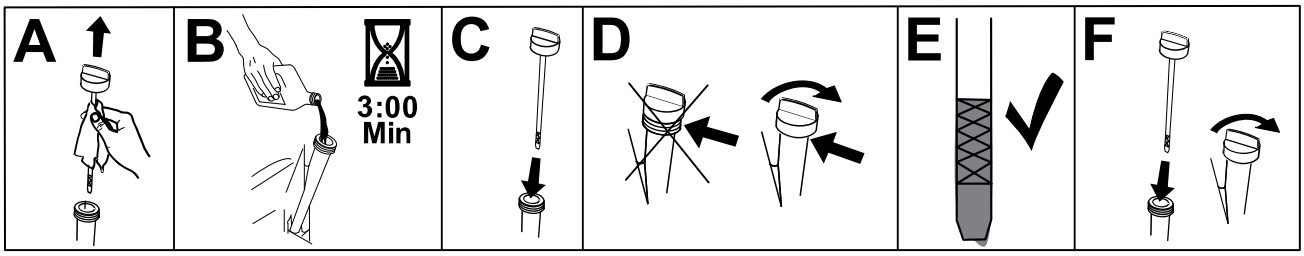

G373565s

7. Dispose of the used oil per local regulations.

Servicing the Spark Plug

Ensure that the air gap between the center and side electrodes is correct before installing the spark plug. Use a spark plug wrench for removing and installing the spark plug and a gapping tool or feeler gauge to check and adjust the air gap. Install a new spark plug if necessary.

Type: Briggs and Stratton® 491055 or Champion® XC92YC

Air gap: 0.76 mm (0.03 inch)

Removing the Spark Plug

1. Park the machine on a level surface, disengage the blade-control switch, and move the motion-control levers outward to the PARK position.
2. Shut off the engine, remove the key, and wait for all moving parts to stop before leaving the operating position.
3. Clean the area around the base of the plug to keep dirt and debris out of the engine.
4. Remove the spark plug.

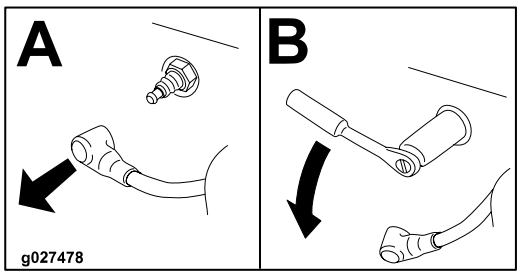

G437139

Servicing the Spark Plug (continued)

Checking the Spark Plug

IMPORTANT

Do not clean the spark plug(s). Always replace the spark plug(s) when it has a black coating, worn electrodes, an oily film, or cracks.

If you see light brown or gray on the insulator, the engine is operating properly. A black coating on the insulator usually means the air cleaner is dirty.

Set the gap to 0.76 mm (0.03 inch).

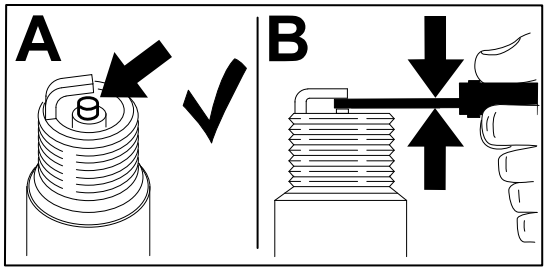

G437150

Installing the Spark Plug

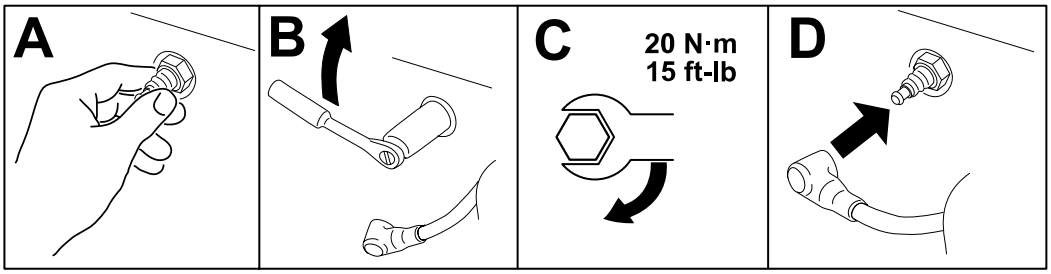

G568319

Cleaning the Cooling System

1. Park the machine on a level surface, disengage the blade-control switch, and move the motion-control levers outward to the PARK position.
2. Shut off the engine, remove the key, and wait for all moving parts to stop before leaving the operating position.
3. Remove the air filter from the engine.
4. To prevent debris entering the air intake, install the air filter to the filter base.
5. Clean debris and grass from the parts.
6. Remove the air filter and install the engine shroud.
7. Install the air filter.

Fuel Maintenance

DANGER

In certain conditions, fuel is extremely flammable and highly explosive. A fire or explosion from fuel can burn you and others and can damage property.

Refer to Fuel Safety, page 4–2 for a complete list of fuel related precautions.

Replacing the Fuel Filter

1. Park the machine on a level surface, disengage the blade-control switch, and move the motion-control levers outward to the PARK position.
2. Shut off the engine, remove the key, and wait for all moving parts to stop before leaving the operating position.
3. Clamp the fuel lines on both sides of the fuel filter.
4. Replace the filter.

   Note: Ensure that the flow-direction arrow on the replacement filter points toward the engine.

IMPORTANT

Never install a dirty filter after removing it from the fuel line.

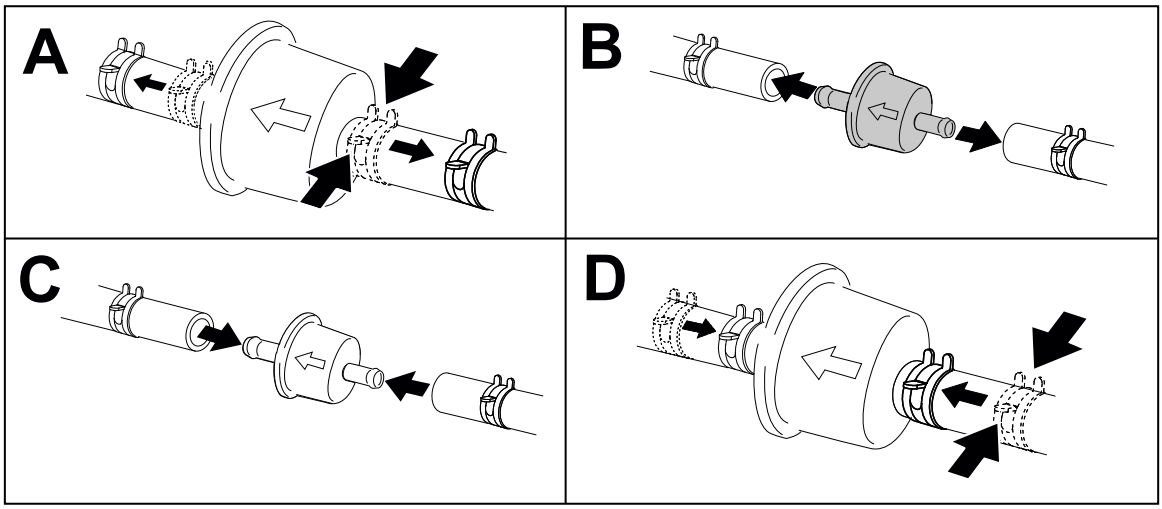

G420323

5. Remove the clamps blocking the fuel flow.

Electrical System Maintenance

Electrical System Safety

- Disconnect the cable from the negative terminal of the battery before repairing the machine.
- Charge the battery in an open, well-ventilated area, away from sparks and flames. Unplug the charger before connecting or disconnecting the battery. Wear protective clothing and use insulated tools.

Battery Service

Removing the Battery

WARNING

Battery terminals or metal tools could short against metal machine components, causing sparks. Sparks can cause the battery gasses to explode, resulting in personal injury.

- **When removing or installing the battery, do not allow the battery terminals to touch any metal parts of the machine.**
- **Do not allow metal tools to short between the battery terminals and metal parts of the machine.**

---

1. Park the machine on a level surface, disengage the blade-control switch, and move the motion-control levers outward to the PARK position.
2. Shut off the engine, remove the key, and wait for all moving parts to stop before leaving the operating position.
3. Raise the seat to access the battery.
4. Disconnect the negative (black) ground cable from the battery post.

   Note: Retain all fasteners.

WARNING

Incorrectly removing the cables from battery could damage the machine and cables, causing sparks. Sparks can cause the battery gasses to explode, resulting in personal injury.

- **Always disconnect the negative (black) battery cable before disconnecting the positive (red) cable.**
- **Always connect the positive (red) battery cable before connecting the negative (black) cable.**

---

5. Slide the rubber cover off the positive (red) cable.

Battery Service (continued)

6. Disconnect the positive (red) cable from the battery post (+).

   Note: Retain all fasteners.

7. Remove the battery hold-down and lift the battery from the battery tray.

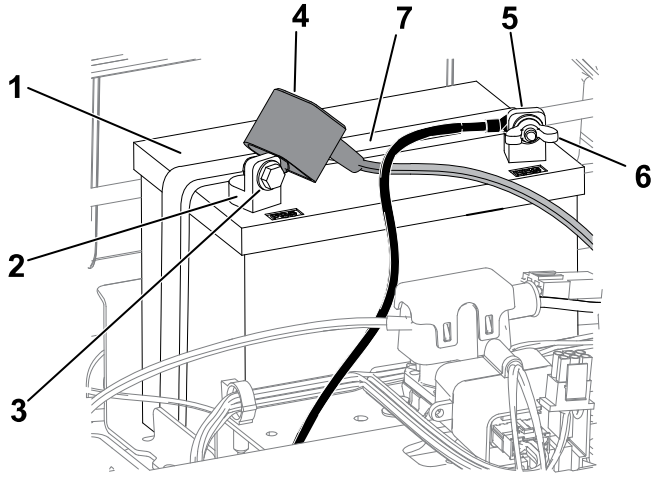

1. Battery
2. Positive (+) battery post
3. Bolt, washer, and nut
4. Terminal boot
5. Negative (–) battery post
6. Wing nut, washer, and bolt
7. Battery hold-down

Charging the Battery

WARNING

Charging the battery produces gasses that can explode.

Never smoke near the battery and keep sparks and flames away from battery.

IMPORTANT

Always keep the battery fully charged. This is especially important to prevent battery damage when the temperature is below 0°C (32°F).

1. Remove the battery from the machine.
2. Charge the battery per the battery charger manufacturer's instructions.

IMPORTANT

Do not overcharge the battery; otherwise, you could damage it.

Battery Service (continued)

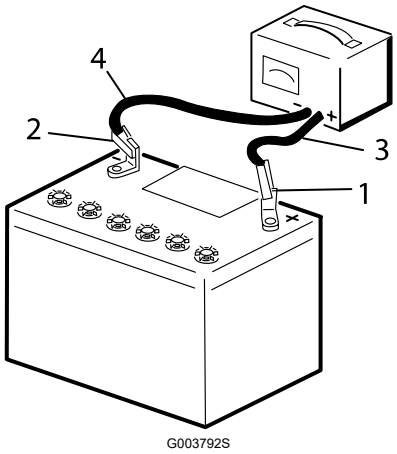

1. Positive battery post
2. Negative battery post
3. Red (+) charger lead
4. Black (-) charger lead

3. When the battery is fully charged, unplug the charger from the electrical outlet (if applicable), then disconnect the charger leads from the battery posts.

Cleaning the Battery

Note: Keep the terminals and the entire battery case clean, because a dirty battery discharges slowly.

1. Park the machine on a level surface, disengage the blade-control switch, and move the motion-control levers outward to the PARK position.
2. Shut off the engine and wait for all moving parts to stop before leaving the operating position.
3. Remove the battery from the machine.
4. Wash the entire case with a solution of baking soda and water.
5. Rinse the battery with clear water.
6. Coat the battery posts and cable connectors with Grafo 112X (skin-over) grease or petroleum jelly to prevent corrosion.
7. Install the battery.

Battery Service (continued)

Installing the Battery

1. Position the battery in the tray.
2. Using the fasteners previously removed, install the positive (red) battery cable to the positive (+) battery terminal.
3. Using the fasteners previously removed, install the negative battery cable to the negative (-) battery terminal.
4. Slide the red terminal boot onto the positive (red) battery post.
5. Secure the battery with the hold-down.

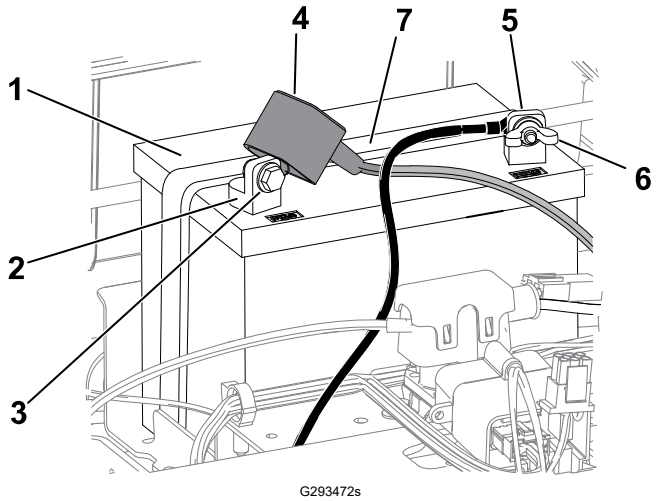

1. Battery
2. Positive (+) battery post
3. Bolt, washer, and nut
4. Terminal boot
5. Negative (–) battery post
6. Wing nut, washer, and bolt
7. Battery hold-down

6. Lower the seat.

Jump-Starting the Machine

WARNING

Jump-starting the battery can produce gasses that can explode.

Do not smoke near the battery, and keep sparks and flames away from battery.

DANGER

Jump-starting a weak battery that is cracked or frozen or has a low electrolyte level or an open/shorted battery cell can cause an explosion, resulting in serious personal injury.

Do not jump-start a weak battery if these conditions exist.

---

1. Check and clean corrosion from the battery terminals before jump-starting. Ensure that the connections are tight.

CAUTION

Corrosion or loose connections can cause unwanted electrical voltage spikes at any time during the jump-starting procedure.

Do not attempt to jump-start the machine with loose or corroded battery terminals, or damage to the engine may occur.

---

2. Make sure that the booster battery is a good and fully charged lead-acid battery at 12.6 V or greater.

   Note: Use properly sized jumper cables with short lengths to reduce voltage drop between systems. Make sure that the cables are color coded or labeled for the correct polarity.

WARNING

Batteries contain acid and produce explosive gases.

- **Shield your eyes and face from the batteries at all times.**
- **Do not lean over the batteries.**

   Note: Ensure that the vent caps are tight and level. Place a damp cloth, if available, over any vent caps on both batteries. Also ensure that the machines do not touch and that both electrical systems are off and at the same rated system voltage. These instructions are for negative ground systems only.

3. Connect the positive (+) cable to the positive (+) terminal of the discharged battery that is wired to the starter or solenoid as shown:

Jump-Starting the Machine (continued)

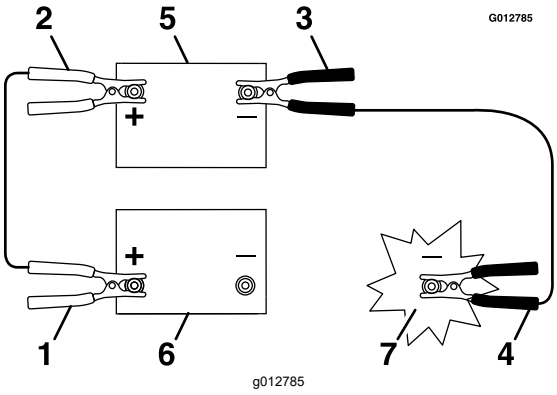

1 Positive (+) cable on discharged battery

2 Positive (+) cable on booster battery

3 Negative (–) cable on the booster battery

4 Negative (–) cable on the engine block

5 Booster battery

6 Discharged battery

7 Engine block

4. Connect the other end of the positive (+) jumper cable to the positive terminal of the battery in the other machine.
5. Connect an end of the negative (-) jumper cable to the negative post of the battery in the other machine.
6. Connect the other end of the negative (-) jumper cable to a ground point, such as an unpainted bolt or chassis member.
7. Start the engine in the other machine. Let it run a few minutes, then start your engine.
8. Remove the cables in the reverse order of connection.
9. Install the cover to the jump post.

Servicing the Fuses

The electrical system is protected by fuses. It requires no maintenance; however, if a fuse blows, check the component/circuit for a malfunction or short.

1. Park the machine on a level surface, disengage the blade-control switch, and move the motion-control levers outward to the PARK position.
2. Shut off the engine, remove the key, and wait for all moving parts to stop before leaving the operating position.
3. Raise the seat.
4. Replace the blown fuse with a new fuse.

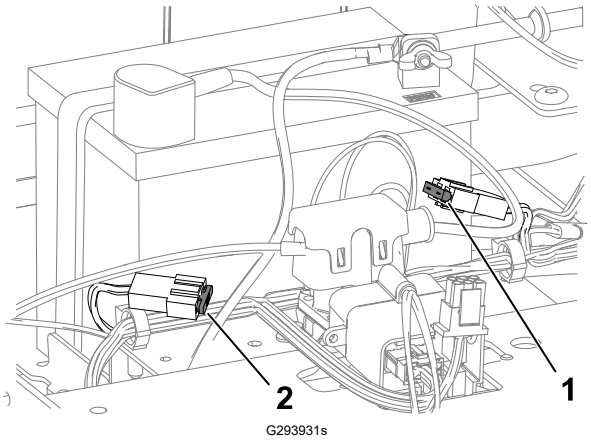

(1) Charge circuit (15 A)

(2) Main (25 A)

5. Lower the seat.

Drive System Maintenance

Checking the Tire Pressure

Maintain the air pressure in the front and rear tires as specified. Uneven tire pressure can cause an uneven cut. Check the pressure at the valve stem when the tires are cold to get the most accurate pressure reading.

1. Inflate the front caster wheel tires to 206 kPa (30 psi) or the pressure indicated on the sidewall, whichever is lower.
2. Inflate the rear drive-wheel tires to 90 kPa (13 psi).

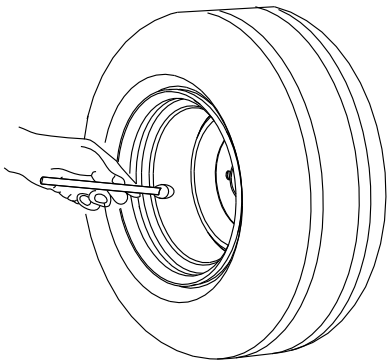

Checking the Wheel Lug Nuts

Check and torque the wheel lug nuts to **95 to 122 N·m (70 to 90 ft-lb)**.

Adjusting the Tracking

If the machine pulls to one side while driving forward at full speed across a flat, level surface, adjust the tracking.

If the machine pulls to the left, adjust the right motion-control lever; if the machine pulls to the right, adjust the left motion-control lever.

Note: You can adjust the tracking only for driving forward.

1. Park the machine on a level surface, disengage the blade-control switch, and move the motion-control levers outward to the PARK position.
2. Shut off the engine, remove the key, and wait for all moving parts to stop before leaving the operating position.
3. Locate the tracking-adjustment bolt near the motion-control lever on the particular side that needs adjusting.

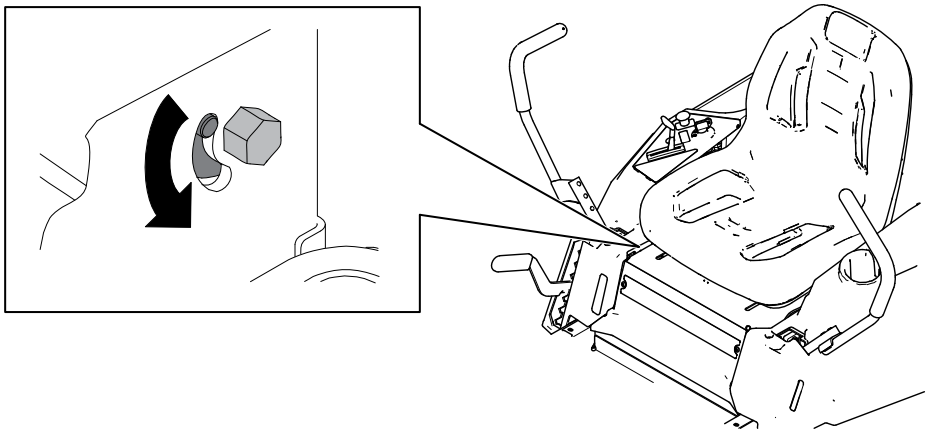

G590953

4. Rotate the bolt to decrease the speed for that particular wheel.

   Note: Rotate the bolt a small amount to make minor adjustments.
5. Start the machine and drive forward across a flat, level surface with the motion-control levers fully forward to check if the machine tracks straight. Repeat the procedure as needed.

Belt Maintenance

Removing or Installing the Floor Pan

WARNING

You can be seriously injured if you operate the machine with the floor pan removed, or if you do not completely remove the floor pan to perform maintenance on components underneath it.

Do not operate the machine with the floor pan removed. Completely remove the floor pan before you perform maintenance underneath it.

1. To remove the floor pan, lift the floor pan and pull it out of the openings in the frame.

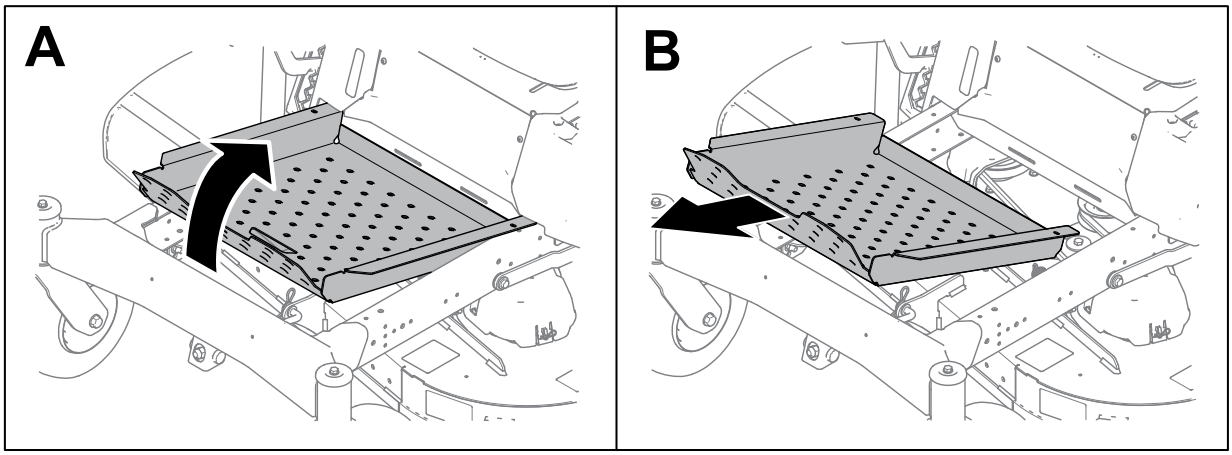

G598318

2. To install the floor pan, place the floor pan in the openings in the frame and lower it into place.

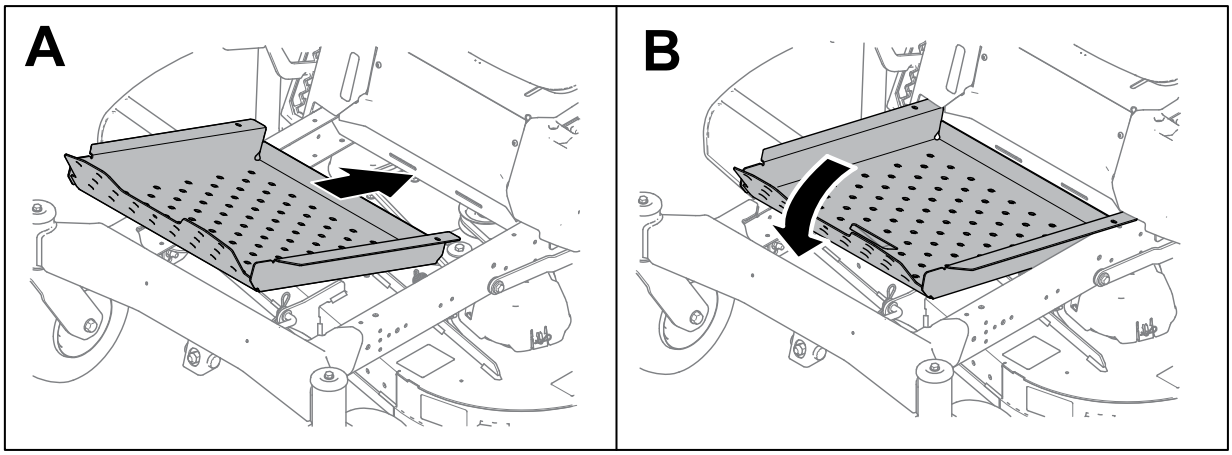

G598317

Inspecting the Belts

1. Park the machine on a level surface, disengage the blade-control switch, and move the motion-control levers outward to the PARK position.
2. Shut off the engine and wait for all moving parts to stop before leaving the operating position.
3. Set the height of cut at the lowest cutting position.
4. Inspect the belt for wear. Replace the belt if it is worn.

   The signs of a worn belt include squealing while the belt is rotating; the blades slipping while cutting grass; and frayed edges, burn marks, and cracks on the belt.

Replacing the Mower Belt

The signs of a worn belt include squealing while the belt is rotating, blades slipping while cutting grass, and frayed edges, burn marks, and cracks on the belt. Replace the mower belt if any of these conditions are evident.

Note: Your mower deck may differ from the version shown in this procedure.

1. Park the machine on a level surface, disengage the blade-control switch, and move the motion-control levers outward to the PARK position.
2. Shut off the engine, remove the key, and wait for all moving parts to stop before leaving the operating position.
3. Set the height of cut at the lowest cutting position.
4. Loosen the fasteners and remove the pulley covers.

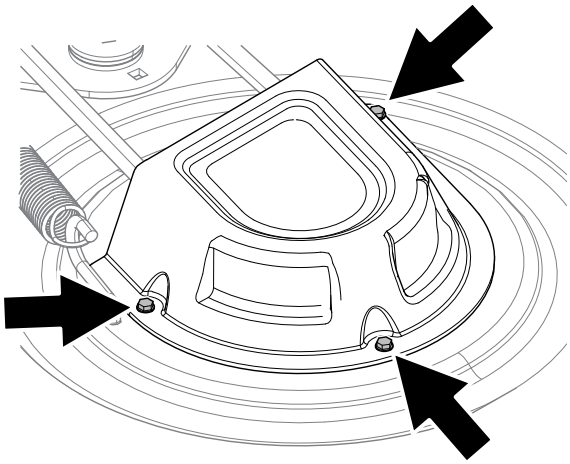

G593475

5. Loosen the nut securing the wire form to the idler pulley.

Replacing the Mower Belt (continued)

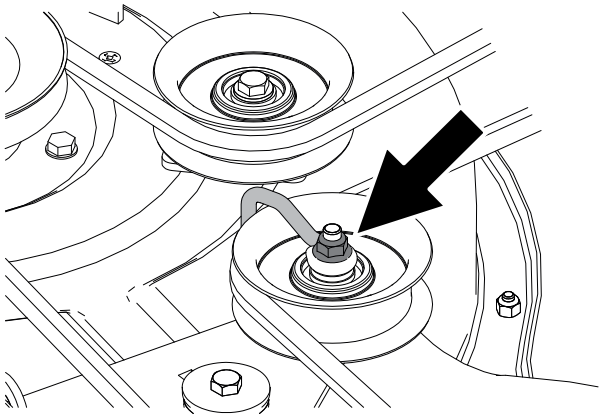

6. Using a spring-removal too (Toro Part No. 92-5771), remove the idler spring from the deck hook to remove tension on the idler pulley.

⚠ WARNING ⚠

The spring is under tension when installed and can cause personal injury.

Be careful when removing the belt.

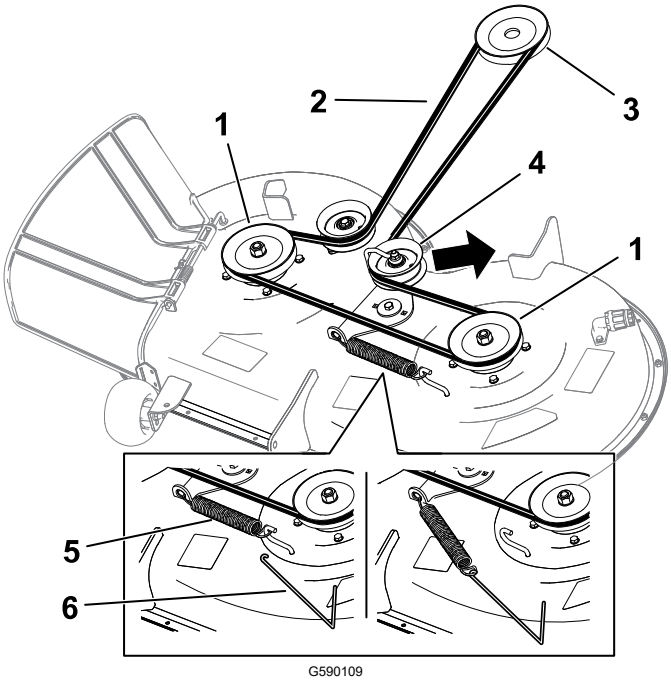

1. Deck pulley
2. Mower belt
3. Engine pulley
4. Idler pulley
5. Spring
6. Spring-removal tool

7. Roll the belt off the pulleys.
8. Route the new belt around the engine pulley and mower pulleys.
9. Use the spring-removal tool to install the idler spring over the deck hook and place tension on the idler pulley and the mower belt.
10. Install the pulley covers.

Mower-Deck Maintenance

Blade Safety

- Inspect the blades periodically for wear or damage.
- Use care when checking the blades. Wrap the blade(s) or wear gloves and use caution when servicing them. Only replace damaged blades; never straighten or weld them.
- On multi-bladed machines, take care as rotating one blade can cause other blades to rotate.
- Replace worn or damaged blades and bolts in sets to preserve balance.

Blade Service

To ensure a superior quality of cut, keep the blades sharp. For convenient sharpening and replacement, keep extra blades on hand.

Replace the blades if they hit a solid object, or if the blade is out of balance or bent.

Before Inspecting or Servicing the Blades

1. Park the machine on a level surface, disengage the blade-control switch, and move the motion-control levers outward to the PARK position.
2. Shut off the engine, remove the key, and wait for all moving parts to stop before leaving the operating position.
3. Disconnect the spark-plug wires from the spark plugs.

Blade Service (continued)

Inspecting the Blades

1. Inspect the cutting edges (1).
2. If the edges are not sharp or have nicks, remove and sharpen the blade.
3. Inspect the blades, especially in the curved area (2).
4. If you notice any cracks (4), wear, or a slot forming (3) in this area, immediately install a new blade.

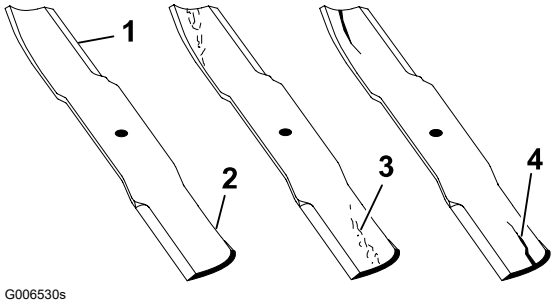

Checking for Bent Blades

The machine must be on a level surface for this procedure.

1. Raise the mower deck to the highest height-of-cut position.
2. While wearing thickly padded gloves, or other adequate hand protection, slowly rotate the blade into a position that allows you to measure the distance between the cutting edge and the level surface.

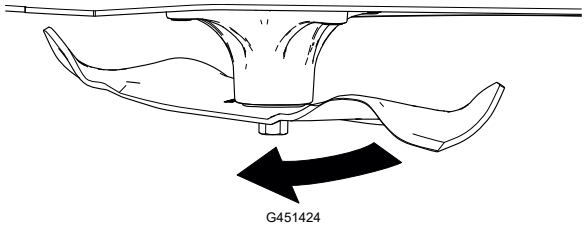

3. Measure from the tip of the blade to the level surface.

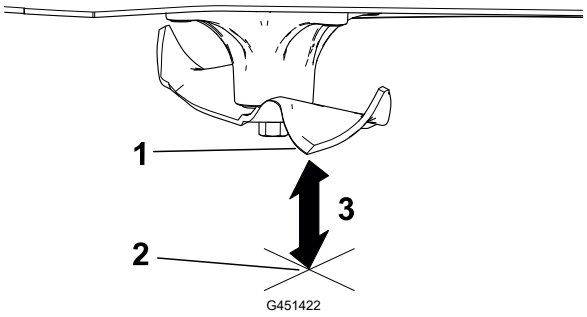

(1) Blade (in position for measuring)

(2) Level surface

(3) Measured distance between blade and the surface (A)

4. Rotate the same blade 180 degrees so that the opposite blade edge is now in the same position.

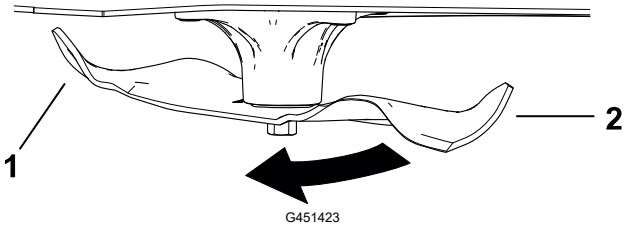

(1) Blade edge previous measured

(2) Opposite blade edge

Blade Service (continued)

5. Measure from the tip of the blade to the level surface.

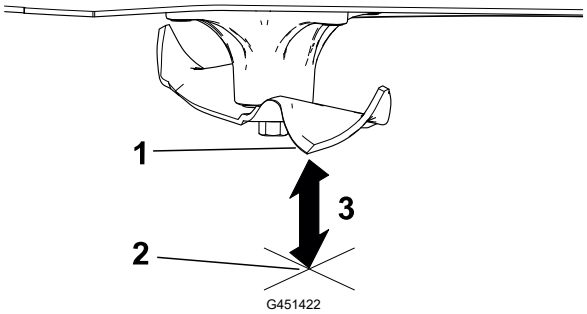

(1) Blade (in position for measuring)

(2) Level surface

(3) Measured distance between blade and the surface (B)

6. If the difference between A and B is greater than 3 mm (1/8 inch), replace the blade.

   Note: If you replace the blade and the difference continues to exceed 3 mm (1/8 inch), the blade spindle could be bent. Contact an Authorized Service Dealer for service.

7. Repeat this procedure each blade.

Removing the Blades

1. Hold the blade end using a rag or thickly padded glove.
2. Remove the blade as shown.

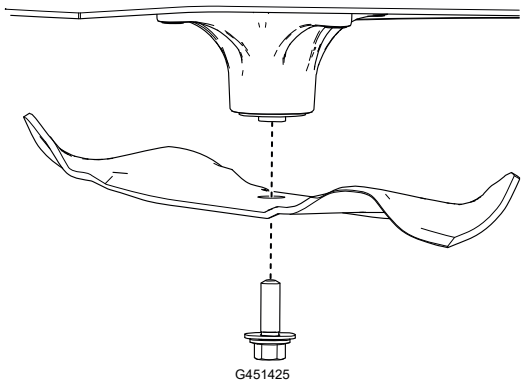

Sharpening the Blades

1. Use a file to sharpen the cutting edge at both ends of the blade. Ensure to maintain the original angle (1).

   Note: Remove the same amount of material from both cutting edges so that the blade retains its balance.

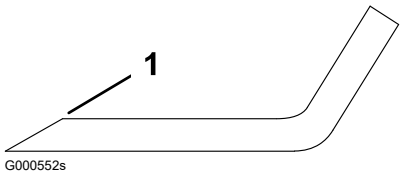

2. Check the balance of the blade (1) by putting it on a blade balancer (2).

   Note: If the blade stays in a horizontal position, the blade is balanced and can be used.

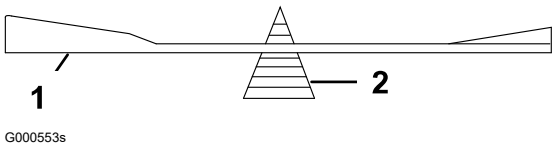

   If the blade is not balanced, file some metal off the end of the sail area only.

Blade Service (continued)

3. Repeat this procedure until the blade is balanced.

Installing the Blades

WARNING

Operating a machine after incorrectly installing the blade assembly and/or not using genuine Toro blade and blade hardware could allow a blade or blade component to be thrown out from under the deck, resulting in serious injury or death.

Always install genuine Toro blades and blade hardware according to the instructions.

1. Install the blade as shown.

   Note: The curved part of the blade must point upward toward the inside of the mower to ensure proper cutting.

2. Torque the blade bolt to **81 to 108 N·m (60 to 80 ft-lb)**.

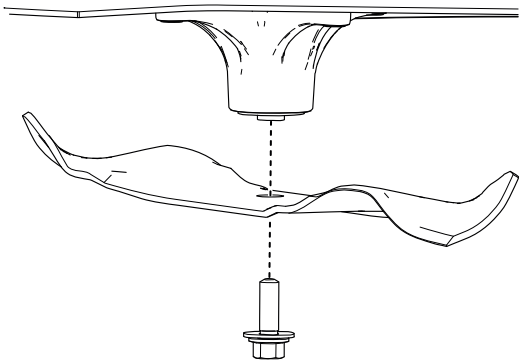

Leveling the Mower Deck

Ensure that the mower deck is level any time you install the mower deck or when you see an uneven cut on your lawn.

Note: Your mower deck may differ from the version shown in the following procedures.

Preparing to Level the Mower Deck

1. Park the machine on a level surface, disengage the blade-control switch, and move the motion-control levers outward to the PARK position.
2. Shut off the engine, remove the key, and wait for all moving parts to stop before leaving the operating position.
3. Ensure that the tires are inflated to the correct specifications and the caster wheels are facing straight forward.
4. Check the mower deck for bent blades; remove and replace any bent blades.
5. Raise the mower deck to the 76 mm (3 inch) height-of-cut setting.

Leveling the Mower Deck (continued)

Checking the Mower-Deck Level

1. Position the blades side-to-side.
2. Measure at locations Ⓐ and Ⓑ from a level surface to the cutting edge of the blade tips ①.

   The difference between the measurements should be no more than 5 mm (3/16 inch). If the measurement is larger, adjust the side-to-side level.

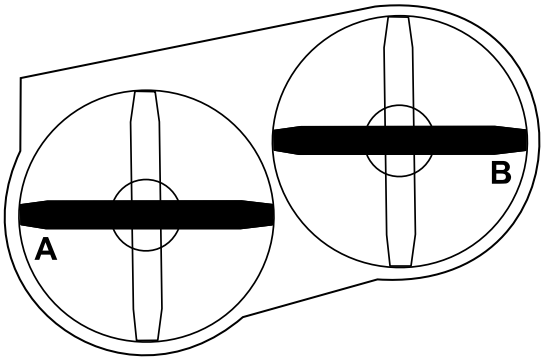

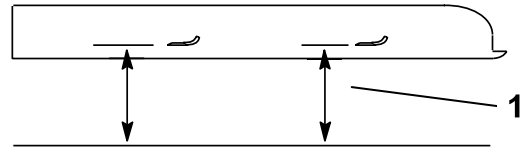

G440738

3. Position 1 blade front-to-rear.
4. Measure at locations Ⓐ and Ⓑ from a level surface to the cutting edge of the blade tips ①.

   The front blade tip should be 1.6 to 7.9 mm (1/16 to 5/16 inch) lower than the rear blade tip. If the measurement is not correct, adjust the front-to-rear level.

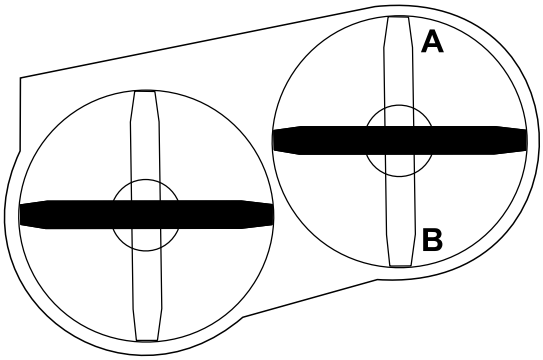

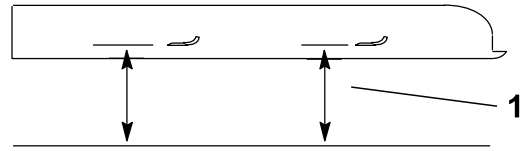

G440749

Leveling the Mower Deck

1. Set the anti-scalp rollers to the top holes or remove them completely for this procedure.
2. Set the height-of-cut lever to the 76 mm (3 inch) position.
3. Place 2 blocks, each having a thickness of 6.6 cm (2-5/8 inches), under each side of the front edge of the deck.

IMPORTANT

Do not place the blocks under the anti-scalp roller brackets.

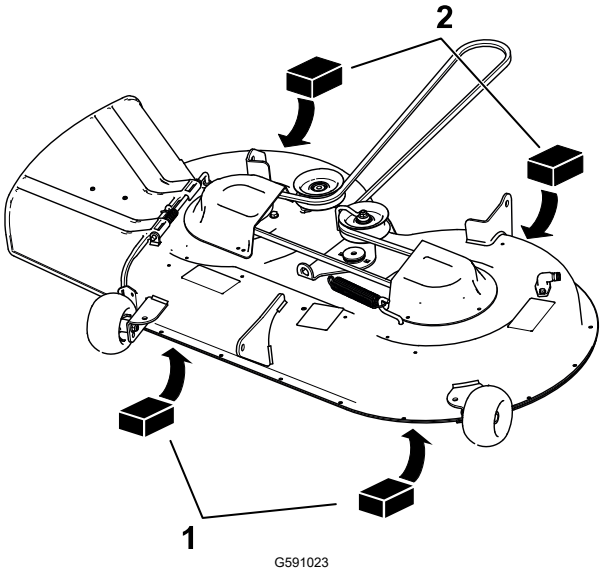

(1) Wood block—6.6 cm (2-5/8 inches) thick

(2) Wood block—7.3 cm (2-7/8 inches) thick

4. Place 2 blocks, each having a thickness of 7.3 cm (2-7/8 inches), under each side of the rear edge of the deck.
5. Adjust the side-to-side level as necessary:
   A. Remove the hairpin cotter and washer from the left lower lift-arm pin.

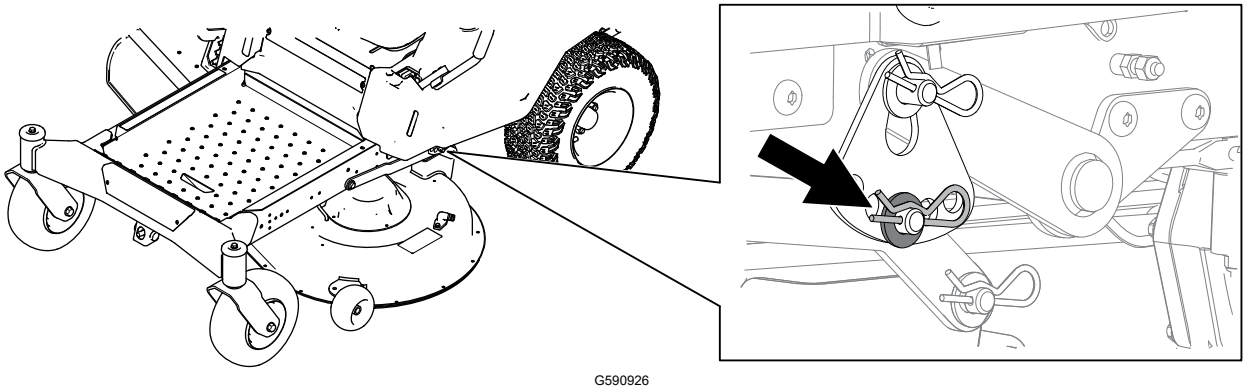

   B. Rotate the height-of-cut plate to a different hole so that it supports the weight of the mower deck after you install the plate.

Leveling the Mower Deck (continued)

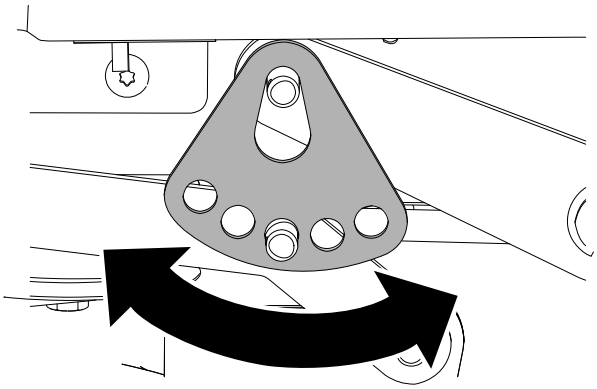

G294195s

C. Install the washer and hairpin cotter.

D. Repeat the adjustment for the other side of the machine.

E. Check the side-to-side level and adjust it again until the measurements are correct.

6. Adjust the front-to-rear level as necessary:

   A. Rotate the adjustment nut in the front of the mower deck.

      To raise the front of the deck, tighten the adjustment nut; to lower the front of the deck, loosen the adjustment nut.

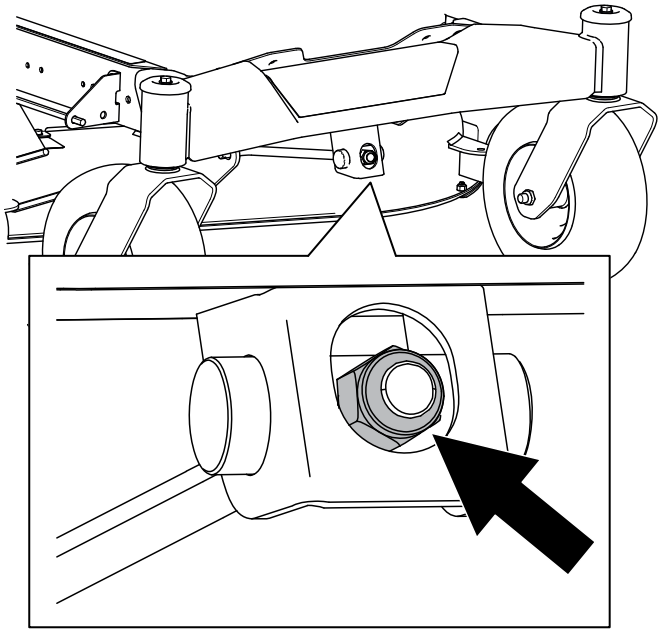

G590967

   B. Check the front-to-rear level and adjust it again until the measurements are correct.

7. Verify that the deck is level and make further adjustments as needed.

Removing the Mower Deck

1. Park the machine on a level surface, disengage the blade-control switch, and move the motion-control levers outward to the PARK position.
2. Shut off the engine, remove the key, and wait for all moving parts to stop before leaving the operating position.
3. Lower the height-of-cut lever to the lowest position.
4. Remove the hairpin cotter from the front support rod and remove the rod from the deck bracket.

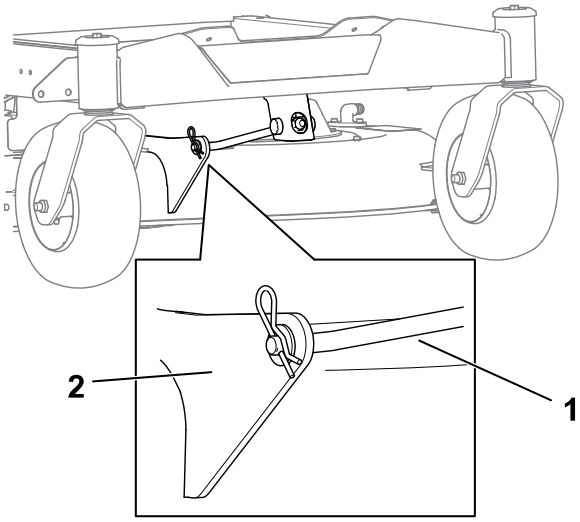

1 Front support rod

2 Deck bracket

5. Carefully lower the front of the mower deck to the ground.
6. On each side of the machine, remove the washer and hairpin cotter from the deck pin.

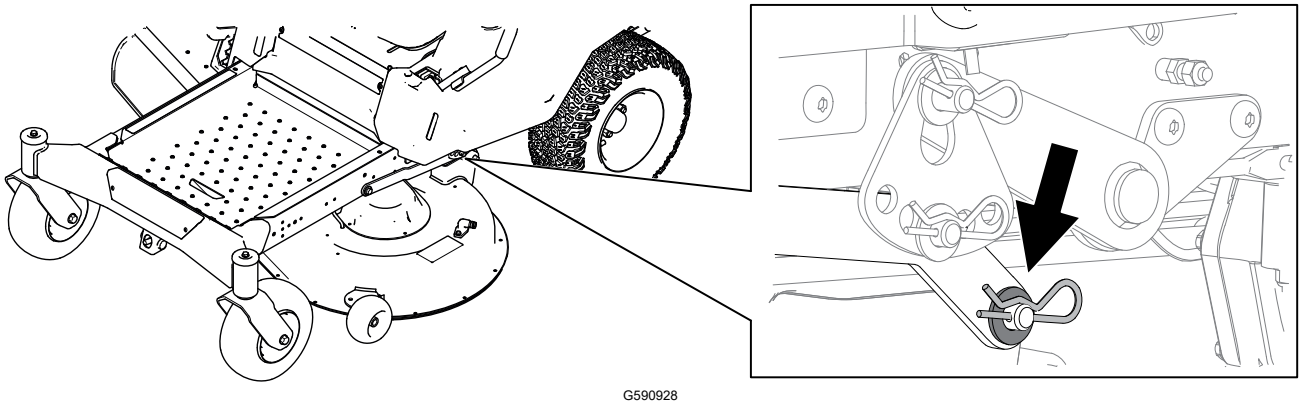

7. Remove the lift arm from the deck pin.
8. Raise the height-of-cut lever to the highest position.
9. Slide the mower deck rearward to remove the mower belt from the engine pulley.
10. Slide the mower deck out from underneath the machine.

Note: Retain all parts for future installation.

Installing the Mower Deck

1. Park the machine on a level surface, disengage the blade-control switch, and move the motion-control levers outward to the PARK position.
2. Shut off the engine, remove the key, and wait for all moving parts to stop before leaving the operating position.
3. Slide the mower deck under the machine.
4. Lower the height-of-cut lever to the lowest position.
5. On each side of the machine, lift the rear of the mower deck and install the lift arm to the deck pin.

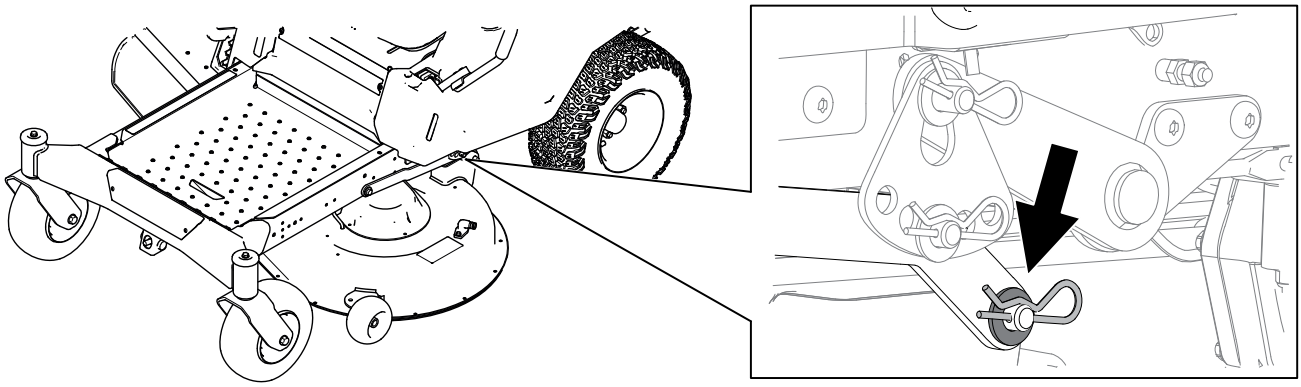

G590928

6. Use the previously removed washer and hairpin cotter to secure the arm on the pin.
7. Use the previously removed hairpin cotter to secure the deck bracket to the front support rod.

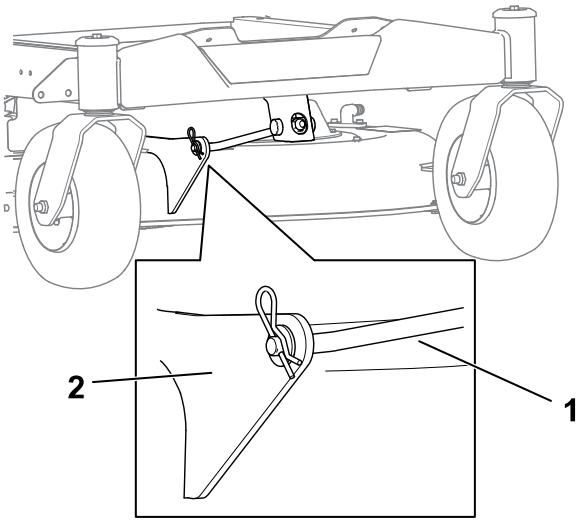

G590968

1 Front support rod

2 Deck bracket

8. Install the mower belt onto the engine pulley.
9. Check the level of the mower deck.

Replacing the Grass Deflector

DANGER

An uncovered discharge opening allows objects to be thrown toward you or bystanders. Also, contact with the blade could occur. Thrown objects or blade contact will cause serious injury or death.

Do not operate the mower with the discharge deflector raised, removed, or altered unless a grass collection system or mulch kit is in place and working properly.

1. Park the machine on a level surface, disengage the blade-control switch, and move the motion-control levers outward to the PARK position.
2. Shut off the engine, remove the key, and wait for all moving parts to stop before leaving the operating position.
3. Remove the nut from the rod under the mower deck.

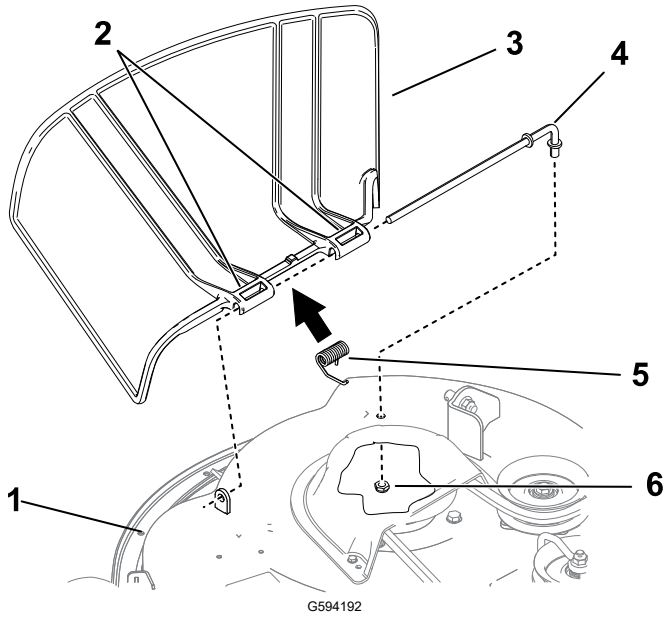

1. Mower deck
2. Grass-deflector pivot
3. Grass deflector
4. Rod
5. Spring
6. Nut

4. Slide the rod out.
5. Remove the damaged or worn grass deflector.
6. Install the new grass deflector.
7. Slide the straight end of the rod through the rear grass deflector pivot.
8. Place the spring on the rod, with end wires down, and between the grass deflector brackets.
9. Slide the rod through the second grass-deflector pivot.
10. Insert the rod at the front of the grass deflector into the bracket on the deck.
11. Secure the rear end of the rod into the mower with the nut.

Replacing the Grass Deflector (continued)

IMPORTANT

The grass deflector must be spring-loaded in the down position. Lift the deflector up to test that it snaps into the full-down position.

Cleaning

Washing the Underside of the Mower Deck

IMPORTANT

You can wash the machine with a mild detergent and water. Do not pressure wash the machine. Avoid excessive use of water, especially near the control panel, under the seat, around the engine, hydraulic pumps, and motors.

Wash the underside of the mower deck after each use to prevent grass buildup for improved mulch action and clipping dispersal.

1. Park the machine on a level surface, disengage the blade-control switch (PTO), and move the motion-control levers outward to the PARK position.
2. Shut off the engine, remove the key, and wait for all moving parts to stop before leaving the operating position.
3. Attach a hose ② to the hose coupling ④, then attach the hose coupling to the end of the mower washout fitting ① and turn the water on high.

   Note: Spread petroleum jelly on the washout fitting O-ring ③ to make the coupling slide on easier and protect the O-ring.

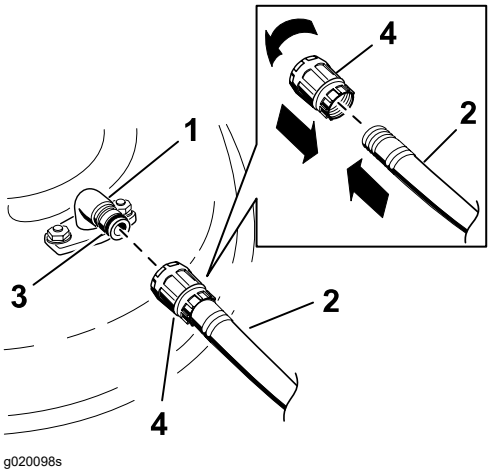

4. Sit on the seat, lower the mower to the lowest height-of-cut, and start the engine.
5. Engage the blade-control switch and let the mower run for 1 to 3 minutes.
6. Disengage the blade-control switch, shut off the engine, remove the key, and wait for all moving parts to stop.
7. Turn the water off and remove the coupling from the washout fitting.

   Note: If the mower is not clean after 1 washing, soak it and let it stand for 30 minutes. Then repeat the process.
8. Run the mower again for 1 to 3 minutes to remove excess water.

Washing the Underside of the Mower Deck (continued)

⚠ WARNING ⚠

A broken or missing washout fitting could expose you and others to thrown objects or blade contact. Contact with a blade or thrown debris can cause injury or death.

- **Replace broken or missing washout fitting immediately, before using machine again.**
- **Never put your hands or feet under the mower or through openings in the machine.**

Disposing of Waste

Engine oil, batteries, hydraulic fluid, and engine coolant are pollutants to the environment. Dispose of these according to your state and local regulations.

Storage Safety

- Park the machine on a level surface, disengage the drives, engage the parking brake, shut off the engine, remove the key, and wait for all moving parts to stop before leaving the operator's position.
- Wait for the machine to cool before servicing, adjusting, fueling, cleaning, or storing it.
- Clean grass and debris from the cutting unit, muffler, drives, grass catcher, and engine compartment to prevent fires.
- Clean up oil and fuel spills and remove fuel-soaked debris.
- Do not store the machine or fuel container where there is an open flame, spark, or pilot light, such as on a water heater or other appliance.

Preparing the Machine for Storage Over 30 Days

1. Park the machine on a level surface, disengage the blade-control switch, and move the motion-control levers outward to the PARK position.
2. Shut off the engine, remove the key, and wait for all moving parts to stop before leaving the operating position.
3. Clean the machine.

IMPORTANT

You can wash the machine with a mild detergent and water. Do not pressure-wash the machine. Avoid excessive use of water, especially near the drive system and engine. Pressure-washing can force dirt and water into critical parts, such as spindle bearings and electrical switches.

   A. Remove grass clippings, dirt, and grime from the external parts of the entire machine, especially the engine.
   B. Scrape any heavy buildup of grass and dirt from the underside of the mower, then wash the machine with a garden hose.
   C. Run the machine with the PTO switch engaged and the engine at high idle for 2 to 5 minutes after washing.
4. Check the parking brake operation.
5. Grease the machine.

6. Check the tire pressure.
7. Charge the battery.
8. Check the condition of the cutting blades.
9. Prepare the fuel system.
   A. Add a petroleum-based fuel stabilizer/conditioner to the fuel in the tank. **Do not use an alcohol-based stabilizer (ethanol or methanol).**
   B. Run the engine to distribute conditioned fuel through the fuel system for 5 minutes.
   C. Shut off the engine, allow it to cool, and drain the fuel tank using a pump-type syphon or operate the engine until it shuts off.
   D. Dispose of fuel properly per local regulations.

IMPORTANT

Do not store fuel containing stabilizer/conditioner longer than the duration recommended by the fuel-stabilizer manufacturer.

10. Prepare the engine.
    A. Service the air cleaner.
    B. Change the engine oil; dispose of used oil per local regulations.
    C. Remove the spark plugs and pour 30 ml (2 tablespoons) of engine oil into the spark plug holes.
    D. Place a rag over the spark plug holes to catch any oil spray, then crank the engine and distribute the oil inside the cylinder.
    E. Install the spark plugs, but do not install the wires.
11. Remove the battery or disconnect the negative (-) battery cable.

    Note: Store the battery in a cool, dry location, where it will not be exposed to extreme temperatures or water. Keep the battery fully charged, especially in temperatures below 0°C (32°F).
12. Check and tighten all fasteners. Repair or replace any worn, damaged, or missing parts.
13. Paint all scratched or bare metal surfaces with paint available from your Authorized Service Dealer.
14. Store the machine in a clean, dry garage or storage area. Cover the machine to protect it and keep it clean.

Storing the Battery

Note: Follow the tips below to properly store the battery.

- If you are storing the machine for more than 30 days, remove the battery and charge it fully.
- Store it either on the shelf or on the machine.
- Leave the cables disconnected if the battery is stored on the machine.
- Store the battery in a cool atmosphere to avoid quick deterioration of the charge in the battery.
- To prevent the battery from freezing, ensure that it is fully charged.
- The specific gravity of a fully charged battery is 1.265 to 1.299.

Battery Storage Tips

If you are storing the battery outside the machine, do the following:

- Store the battery in a cool, dry area in an upright position.
- Do not stack batteries directly on top of each other, unless they are in cartons.
- Do not stack more than 3 batteries (only 2 if the battery type is commercial).
- Test a wet battery every 4 to 6 months and charge it, if necessary.
- Always test and charge the battery before installation.

The fuel tank is showing signs of collapsing or the machine is frequently showing signs of running out of fuel.

Possible Cause	Corrective Action
The air-cleaner paper element clogged.	Clean the paper element.

The engine overheats.

Possible Cause	Corrective Action
The engine load is excessive.	Reduce the ground speed.
The oil level in the crankcase is low.	Add oil to the crankcase.
The cooling fins and air passages under the engine-blower housing are plugged.	Remove the obstruction from the cooling fins and air passages.
The air cleaner is dirty.	Clean or replace the air-cleaner element.
Dirt, water, or stale fuel is in the fuel system.	Contact an Authorized Service Dealer.

The starter does not crank.

Possible Cause	Corrective Action
The blade-control switch is engaged.	Disengage the blade-control switch.
The motion-control levers are not in the PARK position.	Move the motion-control levers outward to the PARK position.
The battery is dead.	Charge the battery.
The electrical connections are corroded or loose.	Check the electrical connections for good contact.
A fuse is blown.	Replace the fuse.
A relay or switch is damaged.	Contact an Authorized Service Dealer.

The engine does not start, starts hard, or fails to keep running.

Possible Cause	Corrective Action
The fuel tank is empty.	Fill the fuel tank.
The choke (if applicable) is not on.	Move the choke lever to the ON position.
The air cleaner is dirty.	Clean or replace the air-cleaner element.
The spark-plug wire(s) is loose or disconnected.	Install the wire(s) on the spark plug.
The spark plug(s) is pitted, fouled, or the gap is incorrect.	Install a new, correctly gapped spark plug (s).
There is dirt in fuel filter.	Replace the fuel filter.
Dirt, water, or stale fuel is in fuel system.	Contact an Authorized Service Dealer.
There is incorrect fuel in the fuel tank.	Drain the tank and replace the fuel with the proper type.
The oil level in the crankcase is low.	Add oil to the crankcase.

The engine loses power.

Possible Cause	Corrective Action
The engine load is excessive.	Reduce the ground speed.
The air cleaner is dirty.	Clean the air-cleaner element.
The oil level in the crankcase is low.	Add oil to the crankcase.
The cooling fins and air passages under the engine blower housing are plugged.	Remove the obstruction from the cooling fins and air passages.
The spark plug(s) is pitted, fouled, or the gap is incorrect.	Install a new, correctly gapped spark plug (s).
The fuel-tank vent is blocked.	Contact an Authorized Service Dealer.
There is dirt in the fuel filter.	Replace the fuel filter.
Dirt, water, or stale fuel is in the fuel system.	Contact an Authorized Service Dealer.
There is incorrect fuel in the fuel tank.	Contact an Authorized Service Dealer.

The machine does not drive.

Possible Cause	Corrective Action
The bypass valves are open.	Close the tow valves.
The traction belts are worn, loose, or broken.	Contact an Authorized Service Dealer.
The traction belts are off the pulleys.	Contact an Authorized Service Dealer.
The transmission has failed.	Contact an Authorized Service Dealer.

The machine vibrates abnormally.

Possible Cause	Corrective Action
The cutting blade(s) is/are bent or unbalanced.	Install new cutting blade(s).
The blade mounting bolt is loose.	Tighten the blade mounting bolt.
The engine mounting bolts are loose.	Tighten the engine mounting bolts.
The engine pulley, idler pulley, or blade pulley is loose.	Tighten the appropriate pulley.
The engine pulley is damaged.	Contact an Authorized Service Dealer.
The blade spindle is bent.	Contact an Authorized Service Dealer.
The motor mount is loose or worn.	Contact an Authorized Service Dealer.

The cutting height is uneven.

Possible Cause	Corrective Action
The blade(s) is not sharp.	Sharpen the blade(s).
A cutting blade(s) is/are bent.	Install a new cutting blade(s).
The mower is not level.	Level the mower from side-to-side and front-to-rear.
An anti-scalp roller (if applicable) is not set correctly.	Adjust the anti-scalp wheel height.
The underside of the mower deck is dirty.	Clean the underside of the mower deck.
The tire pressure is incorrect.	Adjust the tire pressure.
A blade spindle is bent.	Contact an Authorized Service Dealer.

The blades do not rotate.

Possible Cause	Corrective Action
The drive belt is worn, loose or broken.	Install a new drive belt.
The drive belt is off of the pulley.	Install the drive belt and check the adjusting shafts and belt guides for the correct position.
The power-takeoff (PTO) switch or PTO clutch is faulty.	Contact an Authorized Service Dealer.
The mower belt is worn, loose, or broken.	Install a new mower belt.

Electrical Diagram

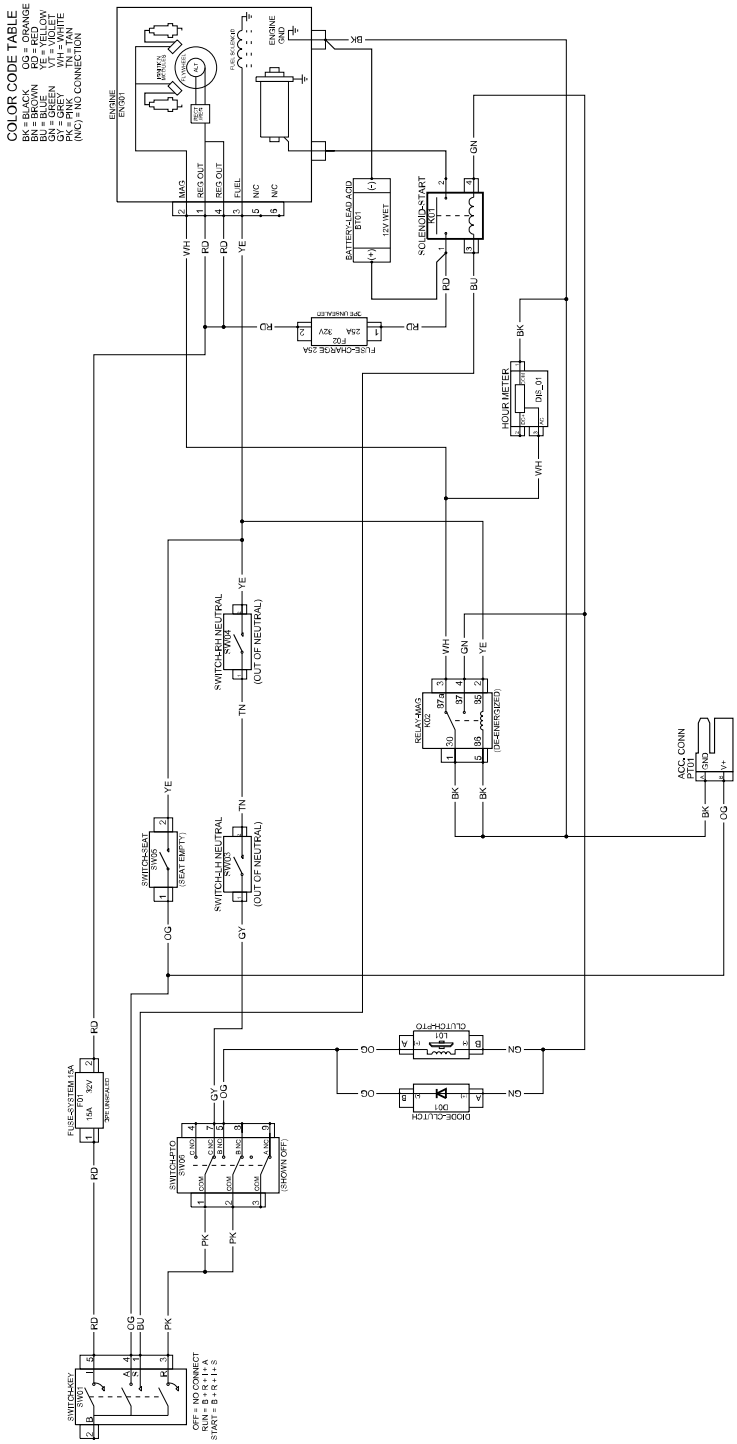

G591631

California Proposition 65 Warning Information

What is this warning?

You may see a product for sale that has a warning label like the following:

WARNING: Cancer and Reproductive Harm—www.p65Warnings.ca.gov.

What is Prop 65?

Prop 65 applies to any company operating in California, selling products in California, or manufacturing products that may be sold in or brought into California. It mandates that the Governor of California maintain and publish a list of chemicals known to cause cancer, birth defects, and/or other reproductive harm. The list, which is updated annually, includes hundreds of chemicals found in many everyday items. The purpose of Prop 65 is to inform the public about exposure to these chemicals.

Prop 65 does not ban the sale of products containing these chemicals but instead requires warnings on any product, product packaging, or literature with the product. Moreover, a Prop 65 warning does not mean that a product is in violation of any product safety standards or requirements. In fact, the California government has clarified that a Prop 65 warning "is not the same as a regulatory decision that a product is 'safe' or 'unsafe.'" Many of these chemicals have been used in everyday products for years without documented harm. For more information, go to https://oag.ca.gov/prop65/faqs-view-all.

A Prop 65 warning means that a company has either (1) evaluated the exposure and has concluded that it exceeds the "no significant risk level"; or (2) has chosen to provide a warning based on its understanding about the presence of a listed chemical without attempting to evaluate the exposure.

Does this law apply everywhere?

Prop 65 warnings are required under California law only. These warnings are seen throughout California in a wide range of settings, including but not limited to restaurants, grocery stores, hotels, schools, and hospitals, and on a wide variety of products. Additionally, some online and mail order retailers provide Prop 65 warnings on their websites or in catalogs.

How do the California warnings compare to federal limits?

Prop 65 standards are often more stringent than federal and international standards. There are various substances that require a Prop 65 warning at levels that are far lower than federal action limits. For example, the Prop 65 standard for warnings for lead is 0.5 µg/day, which is well below the federal and international standards.

Why don't all similar products carry the warning?

- Products sold in California require Prop 65 labelling while similar products sold elsewhere do not.
- A company involved in a Prop 65 lawsuit reaching a settlement may be required to use Prop 65 warnings for its products, but other companies making similar products may have no such requirement.
- The enforcement of Prop 65 is inconsistent.
- Companies may elect not to provide warnings because they conclude that they are not required to do so under Prop 65; a lack of warnings for a product does not mean that the product is free of listed chemicals at similar levels.

Why does Toro include this warning?

Toro has chosen to provide consumers with as much information as possible so that they can make informed decisions about the products they buy and use. Toro provides warnings in certain cases based on its knowledge of the presence of one or more listed chemicals without evaluating the level of exposure, as not all the listed chemicals provide exposure limit requirements. While the exposure from Toro products may be negligible or well within the "no significant risk" range, out of an abundance of caution, Toro has elected to provide the Prop 65 warnings. Moreover, if Toro does not provide these warnings, it could be sued by the State of California or by private parties seeking to enforce Prop 65 and subject to substantial penalties.