Form No. 3484-120 Rev A

TORO®

Count on it.

Parts Catalog

TX 1300

Compact Tool Carrier

Model No. 22370—Serial No. 421200000 and Up

Register at www.Toro.com.
Original Instructions (EN)

CE

3484-120 A

Ordering Replacement Parts

To order replacement parts, please supply the part number, the quantity, and the description of each part desired.

Understanding Reference Numbers

Each identified part in an illustration has a reference number. The reference number for a part also appears in the parts list, along with other information about the part.

This catalog uses two special reference number formats, one to indicate parts in a service assembly and another to indicate the quantity of a given part in an illustration.

Service Assembly Reference Numbers

Parts in service assemblies have reference numbers in the form a:b. The a represents the reference number of the entire service assembly and the b represents a sequential number unique to each part within the service assembly.

For example, a wheel assembly might be identified by reference number 6, the tire by 6:1, the valve by 6:2, and the wheel by 6:3. When you order the assembly identified by reference number 6, you receive all parts identified by reference numbers 6:1,6:2, and 6:3. However, you may also order any part individually. Reference numbers of this type appear in illustration and in parts lists.

Reference Numbers Indicating Quantity

In an illustration, if a reference number indicates more than one part, the reference number has the form nX y. The n represents the quantity of the part, the X is the multiplication symbol, and the y represents the reference number.

For example, in an illustration, the reference number 2X 37 means that two of the parts identified by reference number 37 are indicated.

Contents

Frame Assembly . . . 4
Frame Decal Assembly No. 163-5284 . . . 6
Fuel Tank Assembly No. 140-1679 . . . 8
Track Assembly . . . 10
Track Assembly No. 163-0953 . . . 12
Track Assembly No. 163-0954 . . . 14
Engine Assembly . . . 16
Fuel System Assembly . . . 18
Cooling System Assembly . . . 20
Principal Hydraulic Assembly . . . 22
Spool Lock Loader Hydraulic Valve Assembly No. 161-9440 . . . 24
Tandem Pump Hydraulic Assembly . . . 26
Tandem Pump Assembly No. 139-4733 . . . 28
Hydraulic Gear Pump Assembly No. 139-4755 . . . 30
Manifold Hydraulic Assembly . . . 32
Console Assembly . . . 34
Control Valve Assembly No. 145-3279 . . . 36
Loader Arm Assembly . . . 38
Upper Loader Arm Assembly No. 140-6062 . . . 40
Lower Loader Arm Assembly No. 140-6063 . . . 42
Attachment Plate Assembly No. 140-6017 . . . 44
Hydraulic Cylinder Assembly No. 140-4528 . . . 46
Platform Assembly . . . 48
Hood and Cover Assembly . . . 50
Electrical Assembly . . . 52
Wire Harness Assembly No. 122-2672 . . . 54
Cylinder Block Assembly . . . 56
Gear Housing Assembly . . . 58
Flywheel Housing and Oil Sump Assembly . . . 60
Cylinder Head Assembly . . . 62
Suction Manifold Assembly . . . 64
Exhaust Manifold Assembly . . . 66
Diesel Particulate Filter Assembly . . . 68
Camshaft and Driving Gear Assembly . . . 70
Crankshaft and Piston Assembly . . . 72
Lubrication and Oil System Assembly . . . 74
Cooling System Assembly . . . 76
Fuel System Assembly . . . 78
Fuel Injection Valve Assembly . . . 80
Fuel Line Assembly . . . 82
Starting Motor Assembly . . . 84
Generator Assembly . . . 86
Electrical Assembly . . . 88
Gasket Set . . . 90
Attachments and Accessories . . . 92

© 2026—The Toro® Company

8111 Lyndale Avenue South
Bloomington, MN 55420

Contact us at www.Toro.com.
Printed in the USA.

All Rights Reserved

Frame Assembly

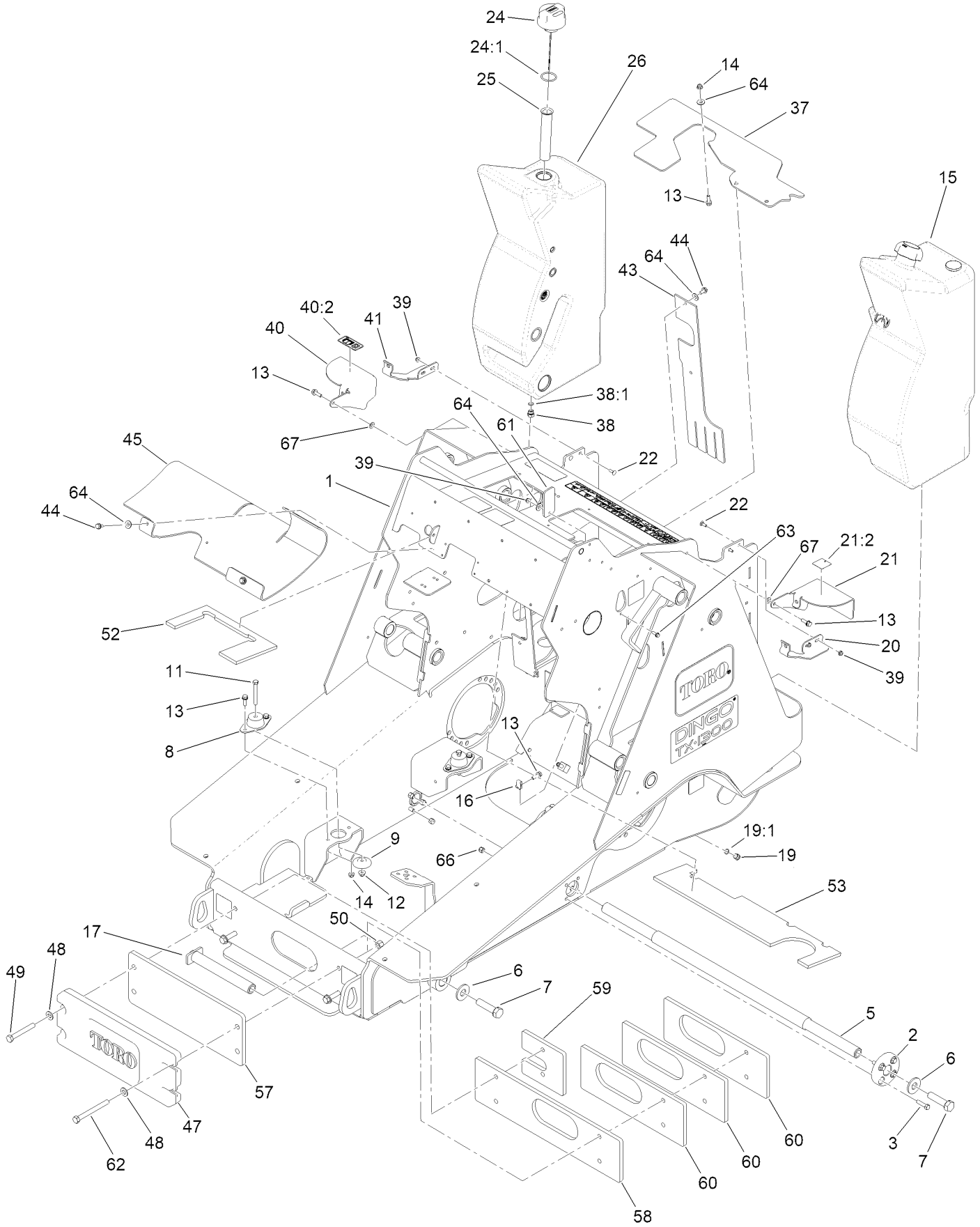

Frame Assembly (continued)

Ref.	Part Number	Qty.	Description
1	163-5284	1	Main Frame ASM,
2	132-9074	2	Hub-Shaft
3	323-43	8	Screw-HH
5	161-7270	1	Shaft-Track
6	99-2659	4	Washer
7	328-25	4	Screw-HH
8	120-6274	4	Mount-Engine
9	138-6462	4	Support-Isolator
11	323-14	4	Screw-HH
12	119-4042	4	Nut-HF, NI
13	3234-29	18	Screw-HHF
14	119-4041	13	Nut-HF
15	140-1679	1	Tank ASM
16	115-7721	5	Nut-Clip, U
17	140-1687	2	Shaft-Front,Track
19	353-989	1	Plug-Hex, Hollow
19:1	237-42	1	O-Ring
20	144-0721-05	1	Bracket-Tank, LH
21	163-5288	1	Bracket-Tank
21:2	163-5287	1	Decal, No Smoking/Diesel Fuel
22	3229-1	4	Screw-CARR
24	117-0193	1	Cap-Hydraulic, Vented Breather
24:1	237-101	1	O-Ring
25	61-2790	1	Filter-Screen
26	140-1775	1	Hydraulic Tank W/Inserts

Ref.	Part Number	Qty.	Description
37	140-1772	1	Baffle-Rubber
38	353-508	1	Plug-HH
38:1	237-42	1	O-Ring
39	104-7201	5	Nut-HF, NI
40	145-4284	1	Bracket-HYD Tank
40:2	125-8483	1	Decal-HYD Fluid
41	144-0724-05	1	Bracket-Tank, RH
43	144-0732	1	Baffle-Side
44	32144-14	10	Screw-HWHTF
45	144-0733	1	Baffle-Console
47	147-7016-01	1	Counterweight-Front
48	3256-26	4	Washer-Flat
49	325-15	2	Screw-HH
50	3296-23	4	Nut-Lock, NI
52	163-3205	1	Foam-Heat Shield
53	163-3206	1	Foam-Heat Shield
57	144-0773-05	1	Plate-Weight
58	144-0779-03	1	Plate-Weight
59	144-0780-03	1	Plate-Weight
60	144-0781-03	3	Plate-Weight
61	145-4272	1	Cover-Rubber
62	325-19	2	Screw-HH
63	120-4654	1	Screw-HHF
64	3256-56	11	Washer-Flat
66	112-0236	8	Nut-Lock
67	131-8667	2	Washer-Thrust

Frame Decal Assembly No. 163-5284

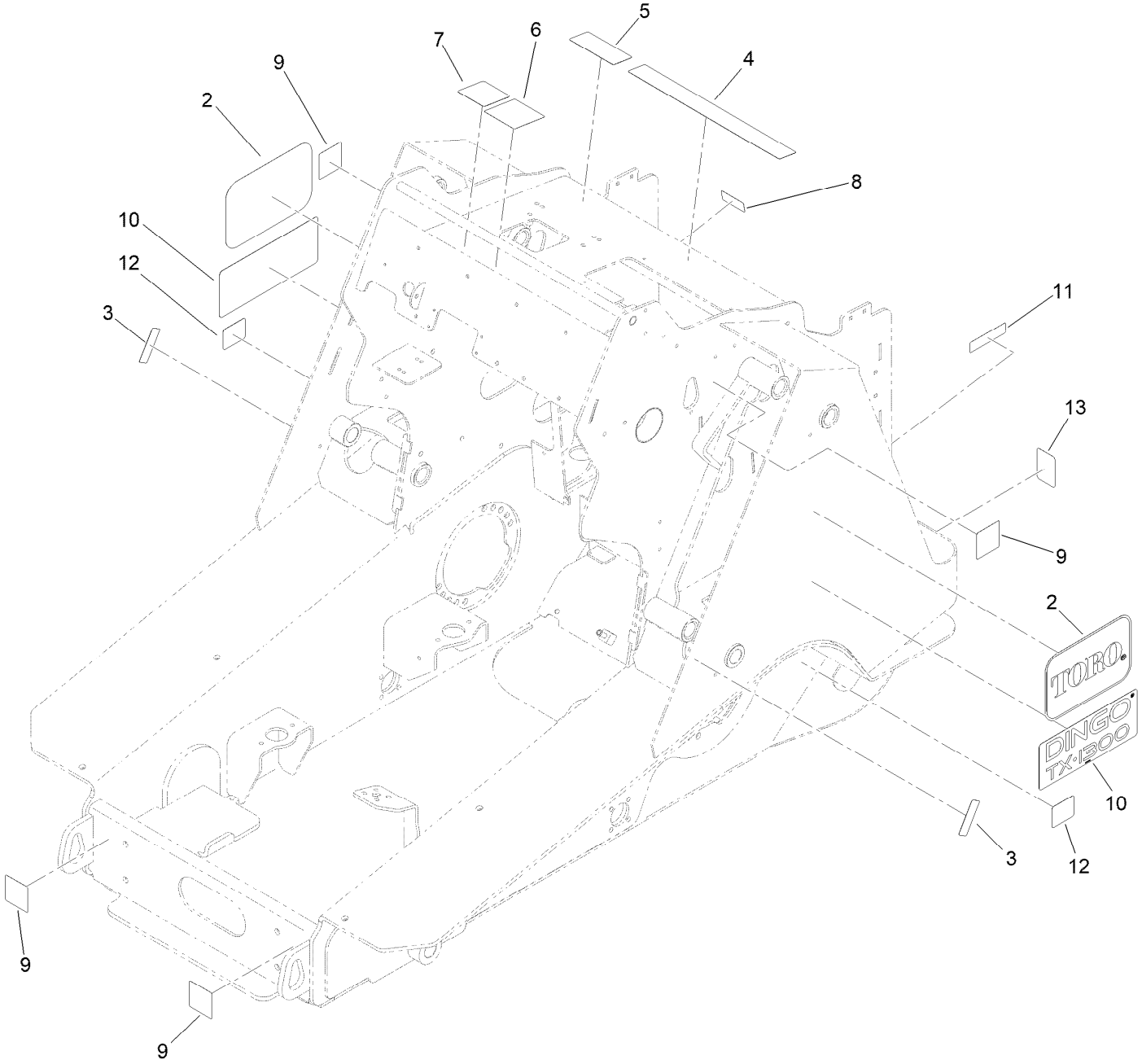

Frame Decal Assembly No. 163-5284 (continued)

Ref.	Part Number	Qty.	Description
2	139-6028	2	Decal-Logo, Toro
3	120-0625	2	Decal-Warning
4	145-0637	1	Decal-Safety
5	139-1162	1	Decal-Safety
6	161-9448	1	Decal-Controls
7	145-4273	1	Decal-Joystick Controls
8	115-2047	1	Decal-Surface, Hot
9	125-4967	4	Decal-Lift Here
10	144-4254	2	Decal-Dingo Tx1300
11	133-8062	1	Decal-Spark Arrestor
12	125-6694	2	Decal-Tie Down
13	100-4627	2	Reflector

Fuel Tank Assembly No. 140-1679

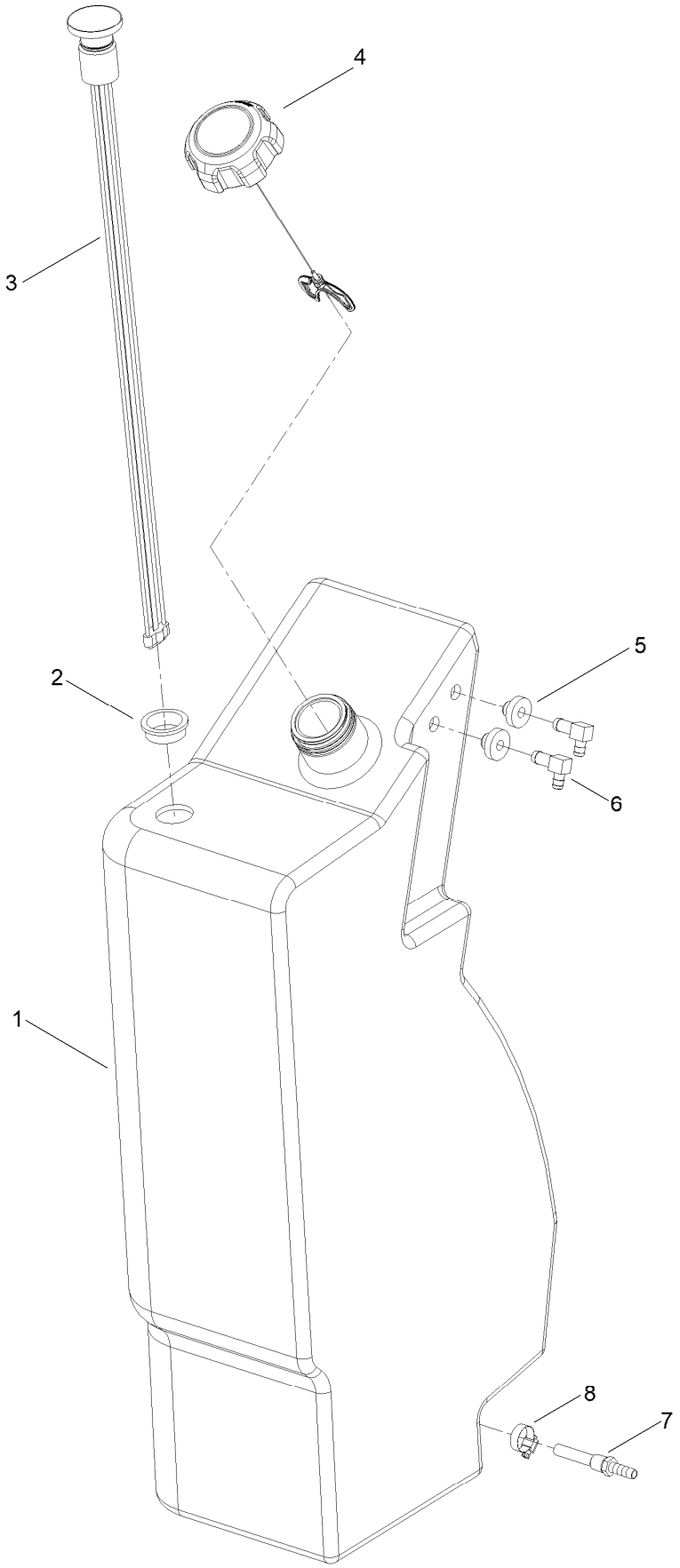

Fuel Tank Assembly No. 140-1679 (continued)

Ref.	Part Number	Qty.	Description
1	140-1650	1	Tank-Deisel
2	95-8972	1	Grommet
3	133-6992	1	Gauge-Level, Fuel
4	144-4373	1	Cap-Diesel
5	46-6560	2	Bushing
6	46-6550	2	Fitting-Elbow, 90 DEG
7	112-6374	1	Fitting-Strainer
8	2412-36	1	Clamp-Hose

Track Assembly

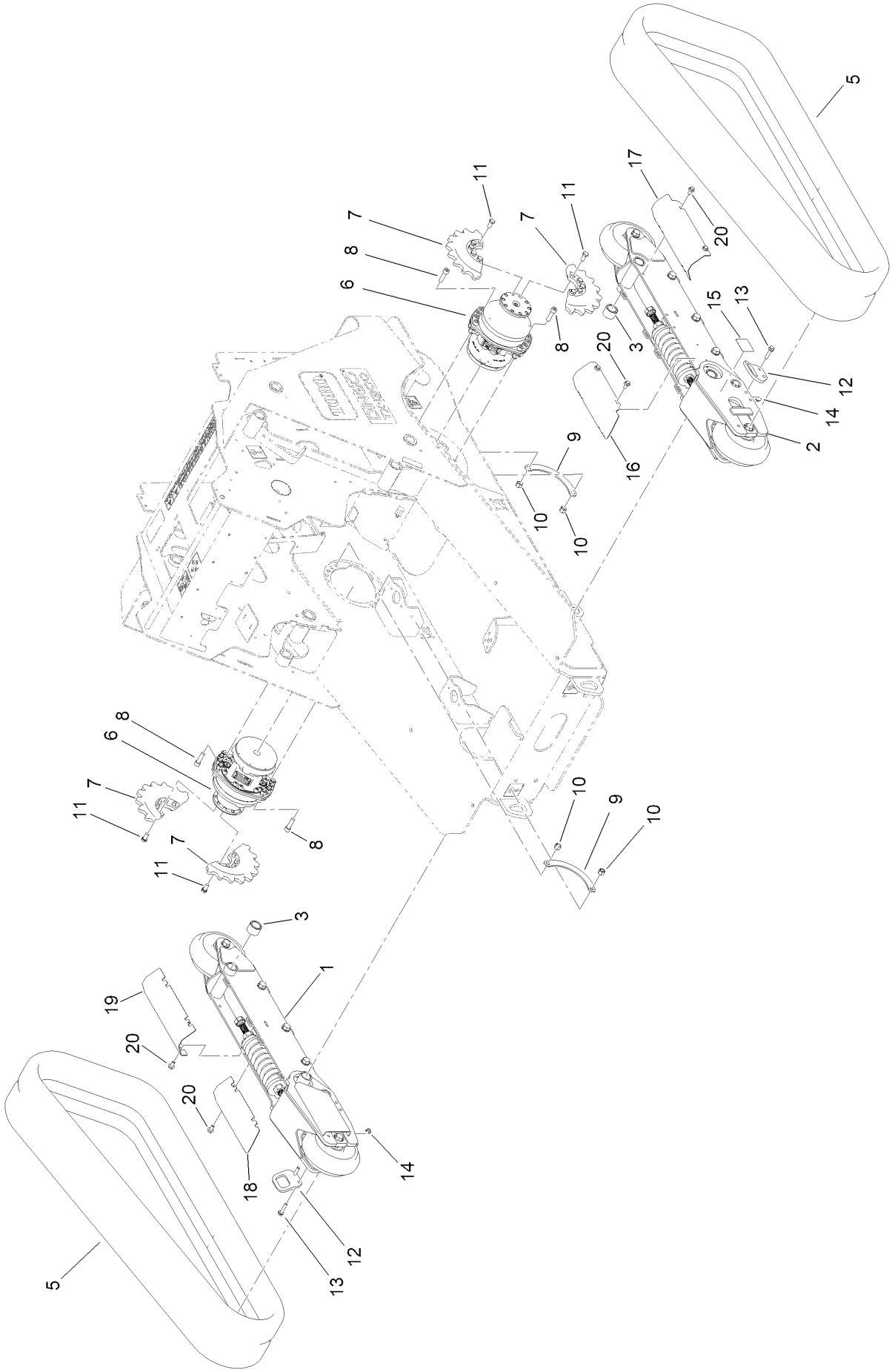

Track Assembly (continued)

Ref.	Part Number	Qty.	Description
1	163-0953	1	Track ASM-RH
2	163-0954	1	Track ASM-LH
3	140-5908	2	Spacer
5	138-0777	2	Track-Wide,
6	139-4857	2	Wheelmotor ASM
7	139-7118	4	Sprocket-Drive
8	131-0661	20	Screw-HSH
9	140-6013-03	2	Plate-Cover
10	3296-23	20	Nut-Lock, NI
11	33116-025	20	Screw-HH
12	140-6077-03	2	Plate-Tie Down
13	3234-19	4	Screw-HHF
14	119-4042	4	Nut-HF, NI
15	125-6694	2	Decal-Tie Down
16	163-0974-05	1	Cover Rear LH
17	163-0975-05	1	Cover Front LH
18	163-0972-05	1	Cover Rear RH
19	163-0973-05	1	Cover Front RH
20	93-2569	8	Screw-HHF

Track Assembly No. 163-0953

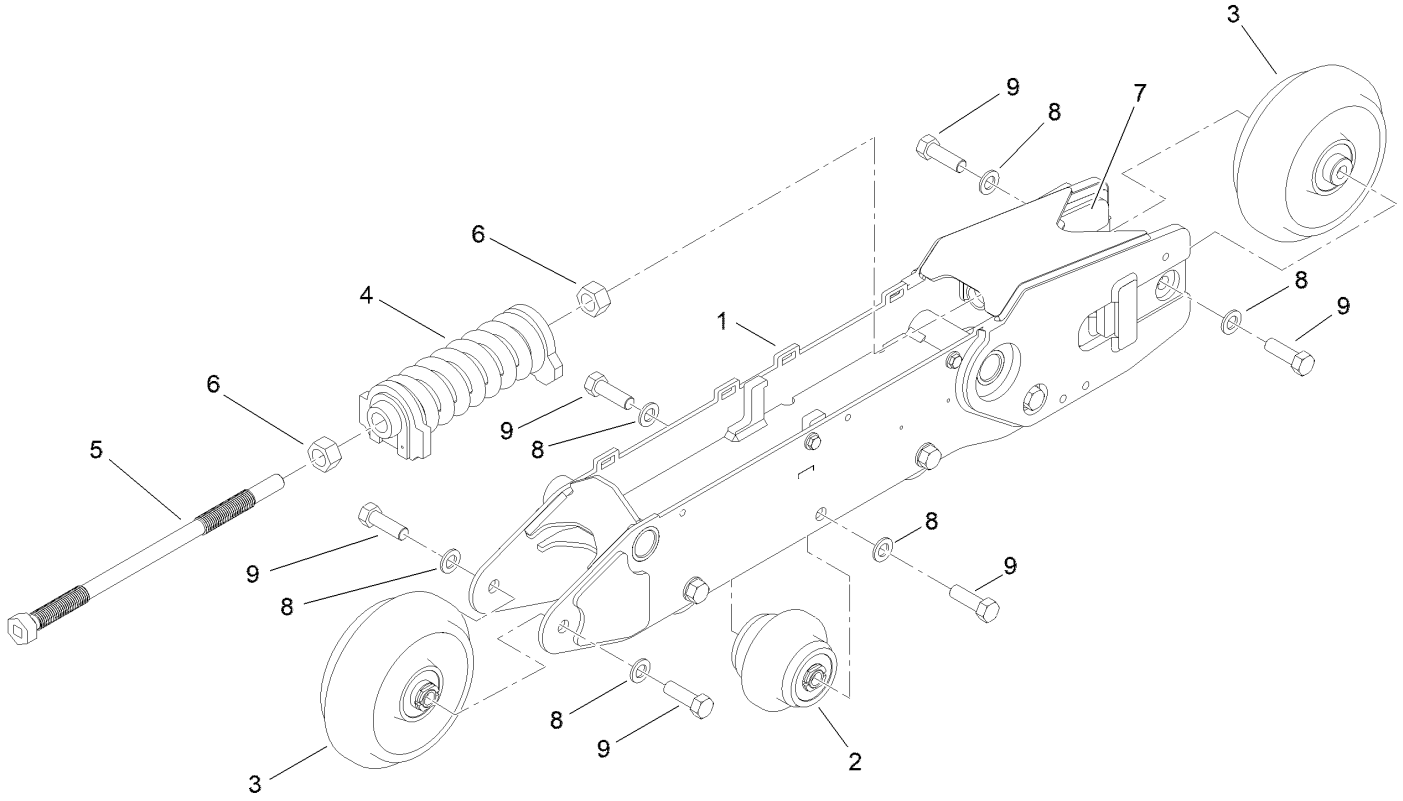

Track Assembly No. 163-0953 (continued)

Ref.	Part Number	Qty.	Description
1	163-0955-05	1	Track Frame RH - Weldment
2	163-0941	4	Wheel ASM-85MM, Single Flange
3	163-0947	2	Wheel ASM-180MM, Single Flange
4	163-0936	1	Kit-Spring Tension
5	163-0978	1	Screw - Tensionner
6	3217-15	2	Nut-Hex
7	163-0935-05	1	Tensionner Welded
8	119-1868	12	Washer
9	111-3484	12	Screw-HH

Track Assembly No. 163-0954

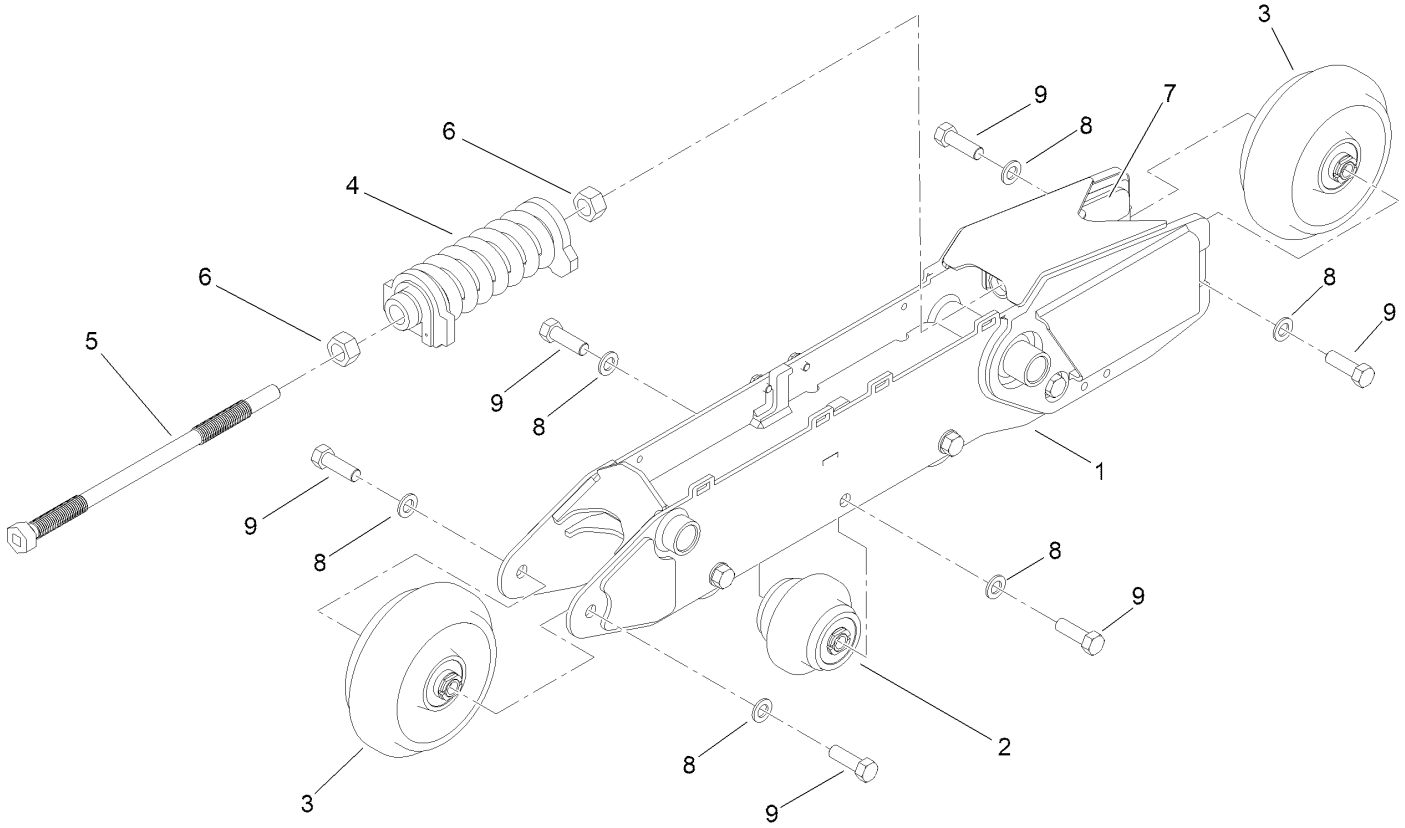

Track Assembly No. 163-0954 (continued)

Ref.	Part Number	Qty.	Description
1	163-0956-05	1	Track Frame LH - [blk-Txt]
2	163-0941	4	Wheel ASM-85MM, Single Flange
3	163-0947	2	Wheel ASM-180MM, Single Flange
4	163-0936	1	Kit-Spring Tension
5	163-0978	1	Screw - Tensionner
6	3217-15	2	Nut-Hex
7	163-0935-05	1	Tensionner Welded
8	119-1868	12	Washer
9	111-3484	12	Screw-HH

Engine Assembly

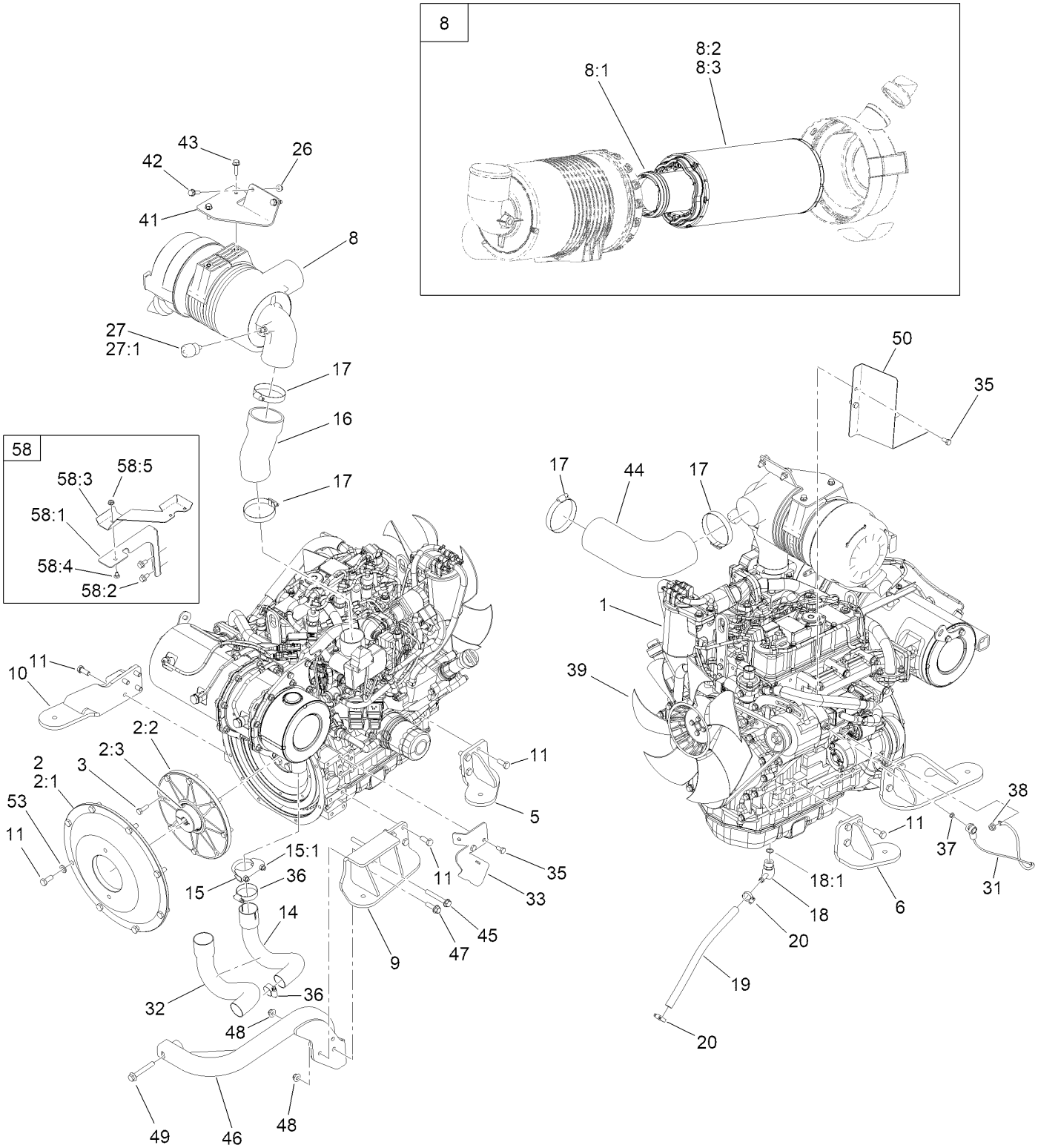

Engine Assembly (continued)

Ref.	Part Number	Qty.	Description
1	164-3560SP	1	Engine-Yanmar, 3Tnv88C-1Dtr
2	139-4732	1	Kit-Drive Coupler
2:1	136-0235	1	Plate- Mounting, Pump
2:2	127-6607	1	Flange-Flywheel
2:3	130-7725	1	Hub-Pump
3	33114-025	8	Screw-HH
5	163-4258-0P	1	Mount-Engine [primed]
6	163-4257-0P	1	Mount-Engine [primed]
8	161-7300	1	Air Cleaner ASM
8:1	161-7289	1	Element-Saftey
8:2	161-7288	1	Filter-Air (Standard Media)
8:3	161-9469	1	Filter-Air (Ultra Web Media)
9	145-4288-0P	1	Mount-Engine [primed]
10	163-4259-0P	1	Mount-Engine [primed]
11	33115-025	24	Screw-HH
14	161-7290	1	Pipe-Exhaust
15	2112-6	1	Clamp-Muffler
15:1	3218-2	2	Nut-Hex Jam
16	161-9433	1	Hose-Intake
17	2412-125	4	Clamp-Hose
18	161-0677	1	Connector
18:1	161-0678	1	O-Ring Fkm
19	92-7424	1	Hose-Overflow, Radiator
20	2412-36	2	Clamp-Hose
26	119-4041	2	Nut-HF
27	104-3563	1	Indicator
27:1	94-1416	1	Adapter-Indicator
31	100-5552	1	Harness-Wire
32	140-6011	1	Sleeve-Exhaust
33	140-6087-0P	1	Bracket-Guard
35	33114-016	4	Screw-HH
36	2412-3	2	Clamp-Hose
37	33003-00	1	Nut-HF
38	33004-00	1	Nut-HF
39	139-4742	1	Fan-Engine,
41	161-9471-0P	1	Bracket-Air Filter
42	3234-29	2	Screw-HHF
43	33104-016	2	Screw-HHF
44	144-4435	1	Hose-Intake
45	133-9682	2	Screw-Hfh
46	145-4285-0P	1	Support-Pump [primed]
47	119-4061	1	Screw-HHF
48	119-4042	3	Nut-HF, NI
49	33105-070	1	Screw-HHF
50	144-4436	1	Bracket-Diverter, Air
53	33095-00	1	Washer-Flat
58	147-9149	1	Shield-Heat, Kit
58:1	147-9116-0P	1	Bracket-Support
58:2	33104-016	2	Screw-HHF
58:3	147-9117	1	Shield-Heat
58:4	3229-10	1	Screw-CARR
58:5	135-2880	1	Nut-HF

Fuel System Assembly

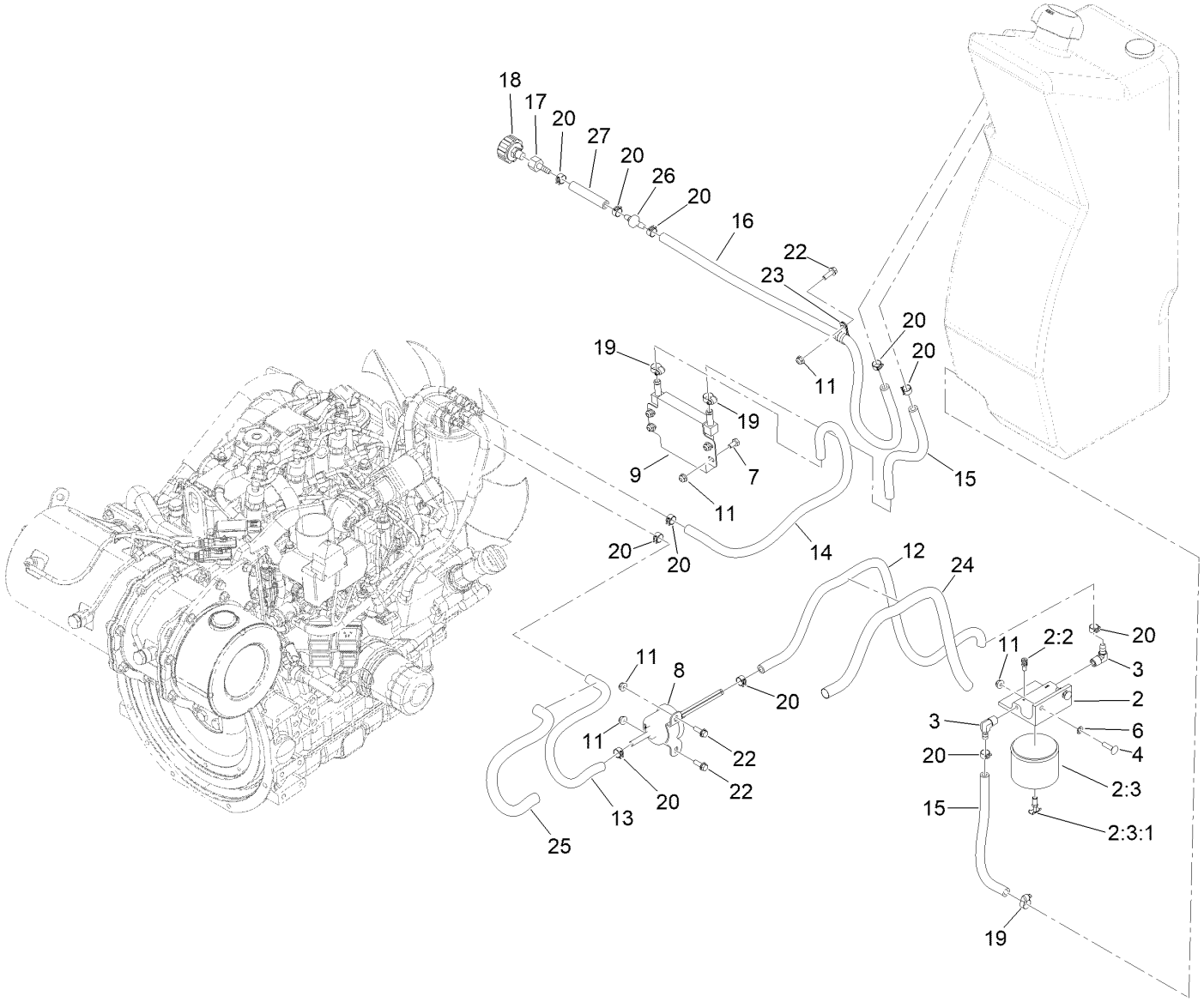

Fuel System Assembly (continued)

Ref.	Part Number	Qty.	Description
2	109-2678	1	Filter ASM
2:2	63-8290	1	Vent-Air
2:3	63-8300	1	Element-Spin On
2:3:1	63-8310	1	Valve-Drain
3	353-781	2	Fitting-HYD, 90
4	3229-2	2	Screw-CARR
6	1-803037	2	Nut-Retaining
7	321-2	4	Screw-HH
8	121-5613	1	Pump-Fuel, Electric
9	116-7205	1	Cooler
11	104-7201	9	Nut-HF, NI
12	110-6186	1	Hose-Fuel
13	110-8752	1	Hose-Fuel
14	109-0308	1	Hose-Fuel
15	130-9191	2	Hose-Fuel
16	110-9662	1	Hose-Fuel
17	354-95	1	Fitting-Straight
18	68-6150	1	Breather
19	2412-108	3	Clamp-Worm
20	92-2379	11	Clamp-Hose
22	115-5103	3	Screw-HHF
23	2412-134	1	Clamp-R
24	131-0575	1	Sleeve-Thermal
25	144-4385	1	Sleeve-Thermal
26	99-5000	1	Valve-Check, Fuel
27	112-6388	1	Hose-Fuel

Cooling System Assembly

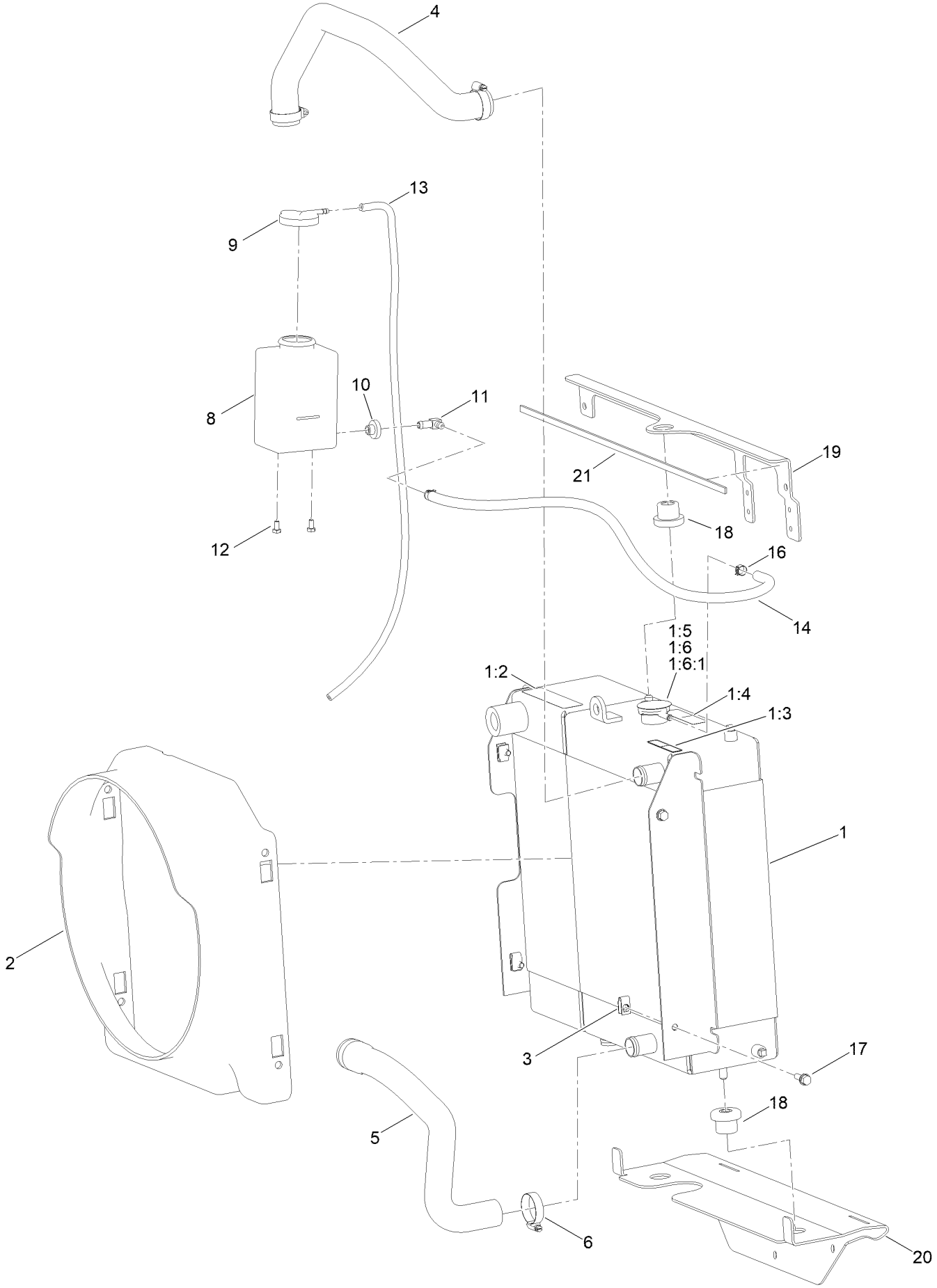

Cooling System Assembly (continued)

Ref.	Part Number	Qty.	Description
1	140-6060	1	Cooling ASM,
1:2	93-7814	1	Decal-Danger
1:3	93-6681	1	Decal-Warning, Fan
1:4	115-4865	1	Decal-Fill, Radiator
1:5	117-3276	1	Decal-Danger
1:6	117-5138	1	Cap-Radiator
1:6:1	117-3276	1	Decal-Danger
2	140-1833	1	Shroud-Radiator
3	115-7721	4	Nut-Clip, U
4	161-7177	1	Hose-Radiator, Upper
5	140-4510	1	Hose-Radiator
6	2412-3	4	Clamp-Hose
8	1-643163	1	Tank-Overflow

Ref.	Part Number	Qty.	Description
9	1-643164	1	Cap-Tank, Overflow
10	46-6560	1	Bushing
11	46-6550	1	Fitting-Elbow, 90 DEG
12	321-2	2	Screw-HH
13	108-6344	1	Hose-Fuel
14	110-6186	1	Hose-Fuel
16	92-2379	2	Clamp-Hose
17	3234-29	4	Screw-HHF
18	119-1422	3	Mount-Isolator
19	144-0762-03	1	Bracket-Cooling, Top
20	144-0766-03	1	Plate-Cooler
21	136-9862	1	Seal-Foam

Principal Hydraulic Assembly

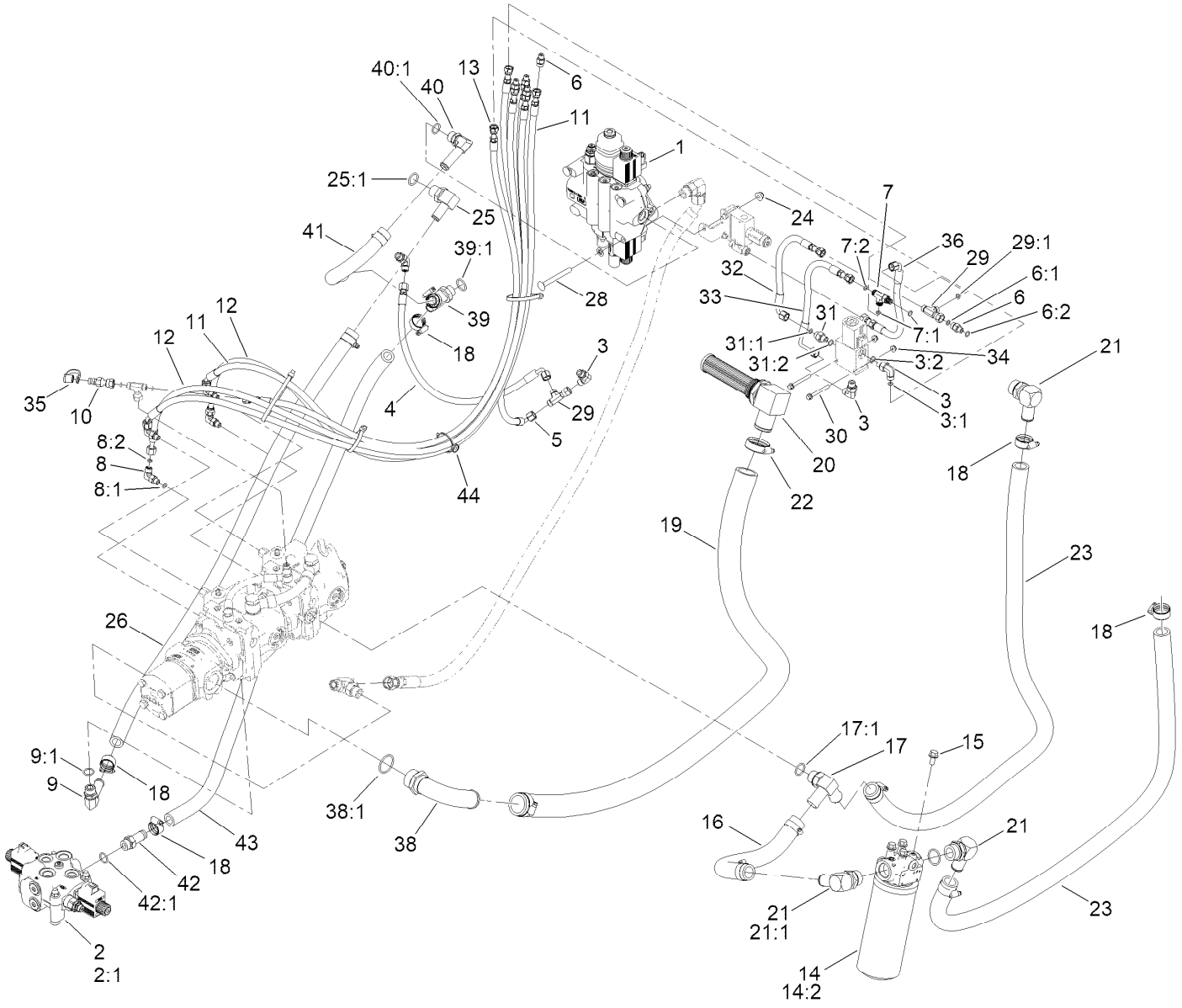

Principal Hydraulic Assembly (continued)

Ref.	Part Number	Qty.	Description
1	161-9440	1	Valve-Loader, Spool Lock
2	139-4737	1	Valve-HYD,
2:1	163-8743	1	Solenoid-Aux, 12V
3	340-82	4	Fitting-Elbow, 90 DEG
3:1	237-42	1	O-Ring
3:2	237-21	1	O-Ring
4	140-4489	1	HYD Hose ASM
5	140-4453	1	HYD Hose ASM
6	340-92	6	Fitting-Straight
6:1	237-78	1	O-Ring
6:2	237-21	1	O-Ring
7	340-140	1	Fitting-Tee
7:1	237-21	2	O-Ring
7:2	237-78	1	O-Ring
8	340-132	4	Fitting-Elbow, 90 DEG
8:1	237-78	1	O-Ring
8:2	237-21	1	O-Ring
9	87-8170	1	Fitting-90
9:1	237-80	1	O-Ring
10	115-8886	1	Nipple-Test
11	140-4457	2	HYD Hose ASM
12	140-4458	2	HYD Hose ASM
13	140-4459	1	HYD Hose ASM
14	139-1010	1	Filter Head ASM
14:2	94-2621	1	Element-Filter
15	3234-1	4	Screw-HHF
16	140-4480	1	HYD Hose ASM
17	AU375462A1	1	Connector
17:1	237-81	1	O-Ring
18	164-1404	12	Clamp-Hose, Lined(1.13-1.56 DIA SS)
19	140-4482	1	HYD Hose ASM
20	140-6070	1	Strainer Fitting ASM
21	23-8910	3	Stem-Barb-90
21:1	237-146	1	O-Ring
22	164-1422	2	Clamp-Hose, Lined(1.70-2.06 DIA SS)
23	140-4481	2	HYD Hose ASM
24	119-4042	12	Nut-HF, NI
25	353-987	1	Fitting-Elbow, 90
25:1	237-81	1	O-Ring
26	140-4487	1	HYD Hose ASM
28	3231-11	6	Screw-CARR
29	340-151	2	Fitting-Tee
29:1	237-21	2	O-Ring
30	138-3326	2	Screw-HHF
31	340-1	1	Fitting-Straight
31:1	237-21	1	O-Ring
31:2	237-42	1	O-Ring
32	144-4413	1	HYD Hose ASM
33	140-5958	1	HYD Hose ASM
34	104-7201	6	Nut-HF, NI
35	354-79	2	Cap-Dust
36	140-4460	1	HYD Hose ASM
38	139-4748	1	Elbow-Suction,
38:1	237-101	1	O-Ring
39	93-6794	1	Fitting-45 DEG 90 DEG
39:1	237-81	1	O-Ring
40	87-8170	1	Fitting-90
40:1	237-80	1	O-Ring
41	144-4339	1	HYD Hose
42	354-136	1	Fitting-STR
42:1	237-80	1	O-Ring
43	144-4351	1	HYD Hose ASM
44	32180-139	1	Mount-Tie Wrap, Magnetic

Spool Lock Loader Hydraulic Valve Assembly No. 161-9440

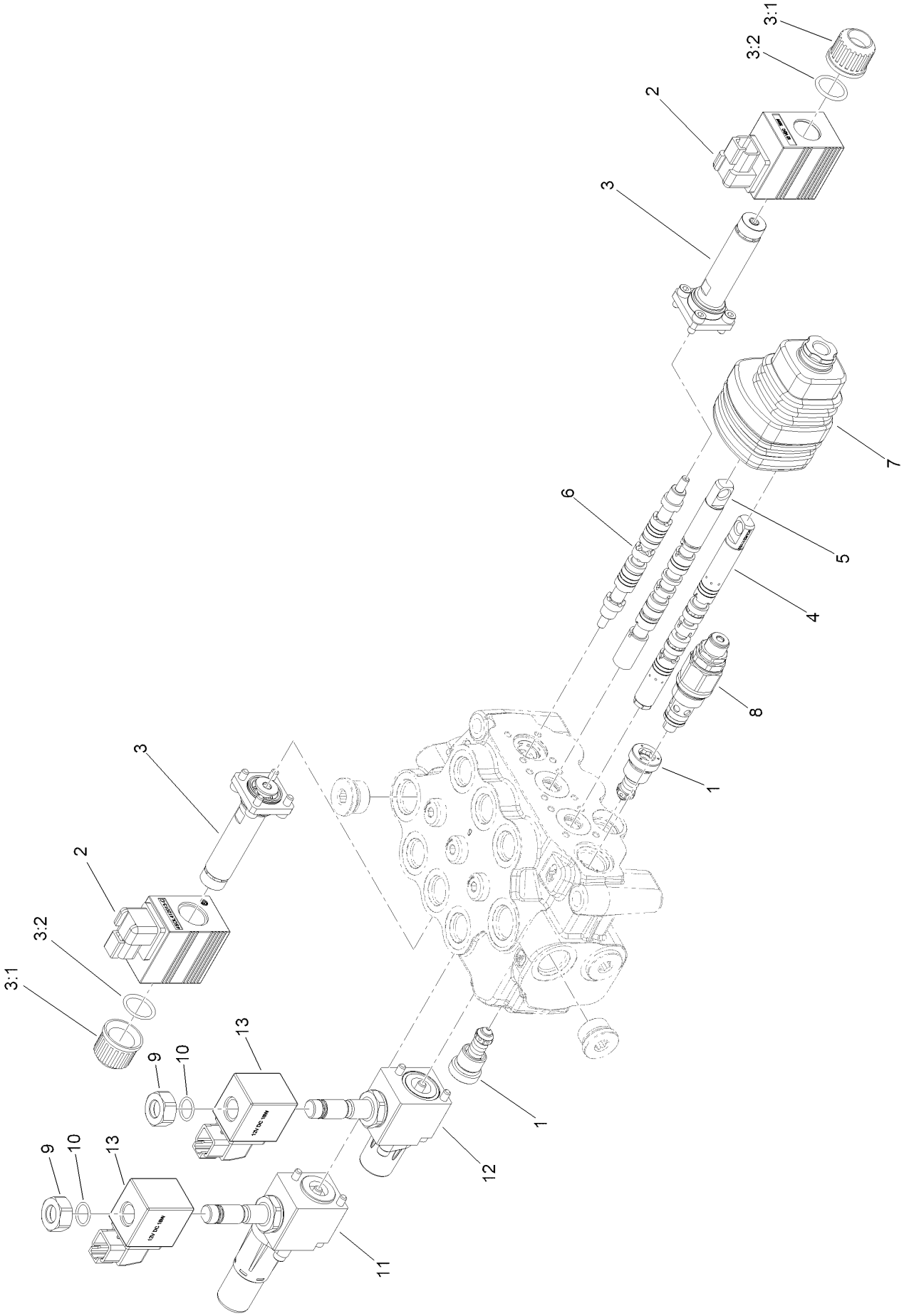

Spool Lock Loader Hydraulic Valve Assembly No. 161-9440 (continued)

Ref.	Part Number	Qty.	Description
1	106-7734	2	Valve-Relief
2	136-5811	2	Coil-Valve
3	145-3319	2	Coil-Tube
3:1	163-4298	2	Nut-Retainer
3:2	163-4299	2	O-Ring
4	161-7294	1	Spool-Valve
5	161-7295	1	Spool-Valve
6	163-7705	1	Spool - Valve
7	163-7706	1	Kit - Joystick
8	163-7709	1	Valve - Relief
9	163-8710	2	Nut
10	163-8711	2	O-Ring
11	163-8716	1	Spool Lock ASM
12	163-8717	1	Spool Lock ASM
13	163-8718	2	Solenoid, 12V

Tandem Pump Hydraulic Assembly

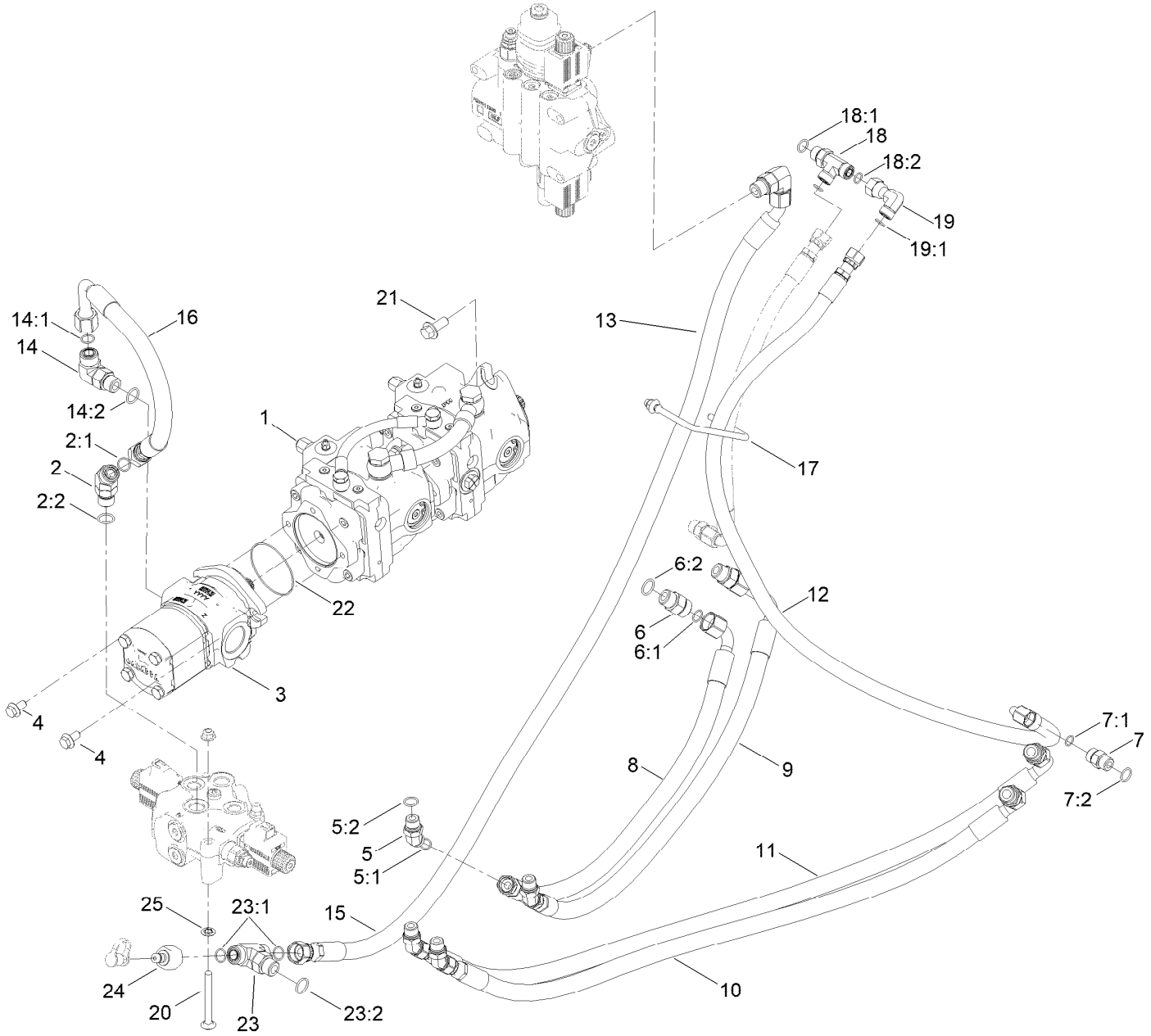

Tandem Pump Hydraulic Assembly (continued)

Ref.	Part Number	Qty.	Description
1	139-4733	1	Pump-Tandem
2	340-14	3	Fitting-HYD, 45 DEG
2:1	237-65	1	O-Ring
2:2	237-80	1	O-Ring
3	139-4755	1	Gear Pump ASM
4	33105-020	2	Screw-HHF
5	340-101	4	Fitting-HYD, 45 DEG
5:1	237-30	1	O-Ring
5:2	237-79	1	O-Ring
6	340-7	4	Fitting-Straight
6:1	237-65	1	O-Ring
6:2	237-80	1	O-Ring
7	340-4	2	Fitting-Straight
7:1	237-30	1	O-Ring
7:2	237-79	1	O-Ring
8	140-4450	1	HYD Hose ASM
9	140-4451	1	HYD Hose ASM
10	140-5977	1	HYD Hose ASM
11	140-5978	1	HYD Hose ASM
12	140-4483	1	HYD Hose ASM

Ref.	Part Number	Qty.	Description
13	105-4347	1	Hose-HYD
14	340-17	2	Fitting-Elbow, 90 DEG
14:1	237-65	1	O-Ring
14:2	237-80	1	O-Ring
15	140-4461	1	HYD Hose ASM
16	140-4468	1	HYD Hose ASM
17	140-4486	1	Guide-Hose
18	340-109	1	Fitting-Tee
18:1	237-79	1	O-Ring
18:2	237-30	2	O-Ring
19	94-6031	1	Elbow-90
19:1	237-30	1	O-Ring
20	133-9682	4	Screw-Hfh
21	AU100416	2	Screw-Hfh
22	353-949	1	O-Ring
23	340-93	1	Tee-Adapter
23:1	237-65	2	O-Ring
23:2	237-80	1	O-Ring
24	86-5860	1	Nipple
25	107-3154	6	Nut-Push

Tandem Pump Assembly No. 139-4733

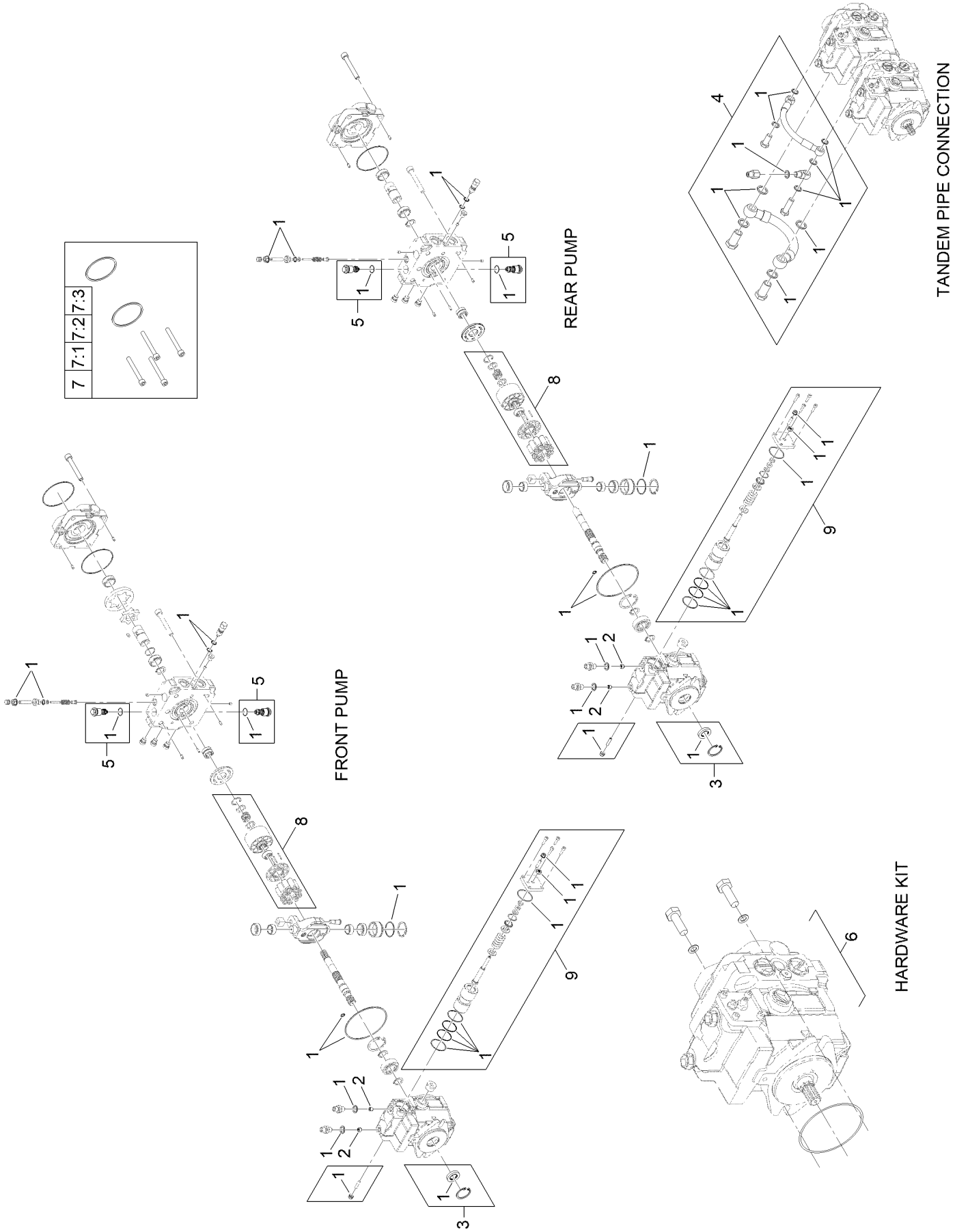

Tandem Pump Assembly No. 139-4733 (continued)

Ref.	Part Number	Qty.	Description
1	139-8742	2	Seal Kit
2	132-6042	4	Spacer-Jet
3	132-6045	1	Shaft Seal Kit
4	132-6047	1	Tandem Connection Pipe Kit
5	139-4734	4	Valve-Relief,
6	140-5300	1	Hardware Kit

Ref.	Part Number	Qty.	Description
7	144-7363	1	Bolt Kit
7:1		4	Poclain P/N 4485 ●
7:2		1	Poclain P/N 4670 ●
7:3		1	Poclain P/N 4480 ●
8	132-6048	2	Rotating Group Kit
9	132-6049	2	HYD Servo Control Kit

● Not serviced separately

Hydraulic Gear Pump Assembly No. 139-4755

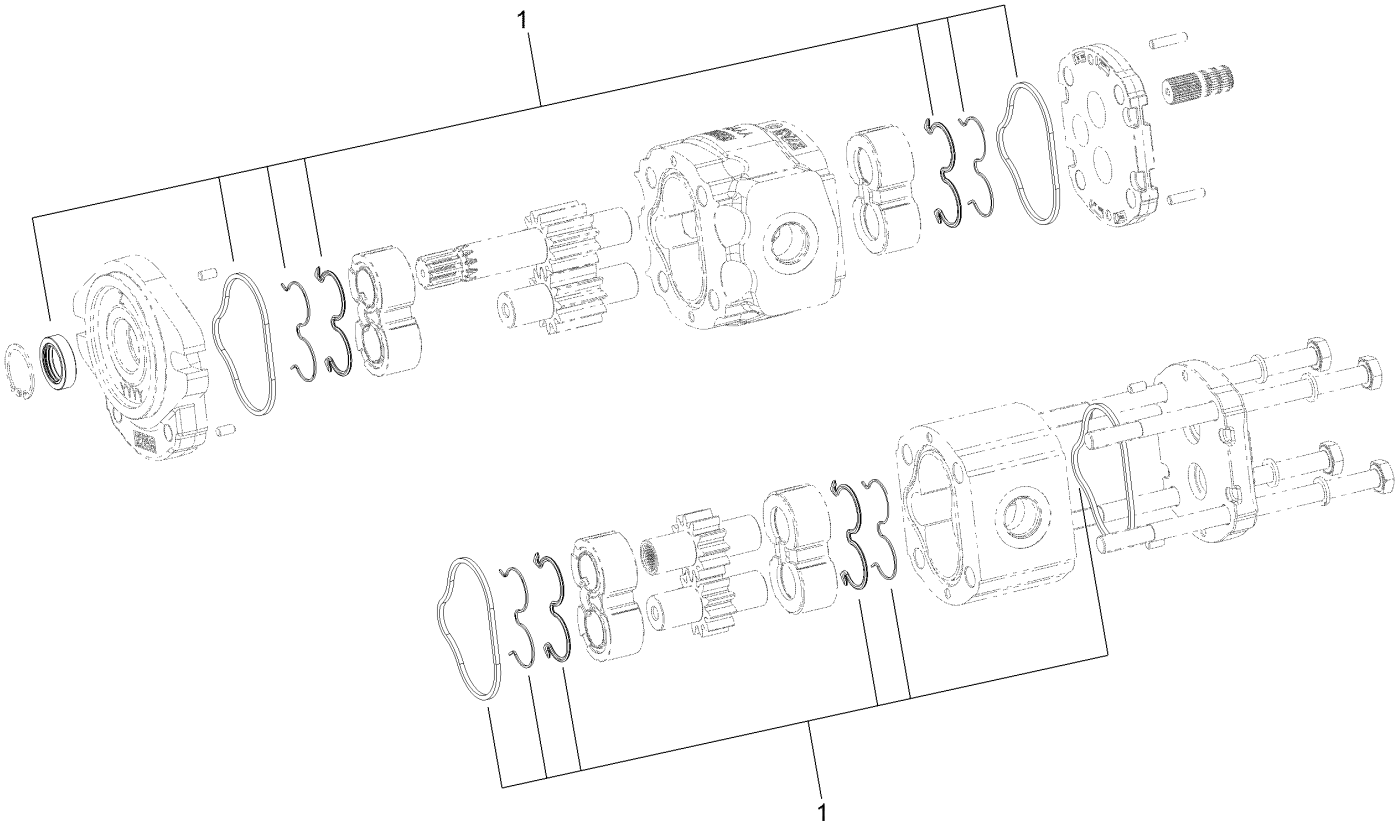

Hydraulic Gear Pump Assembly No. 139-4755 (continued)

Ref.	Part Number	Qty.	Description
1	139-4757	1	Kit-Seal,

Manifold Hydraulic Assembly

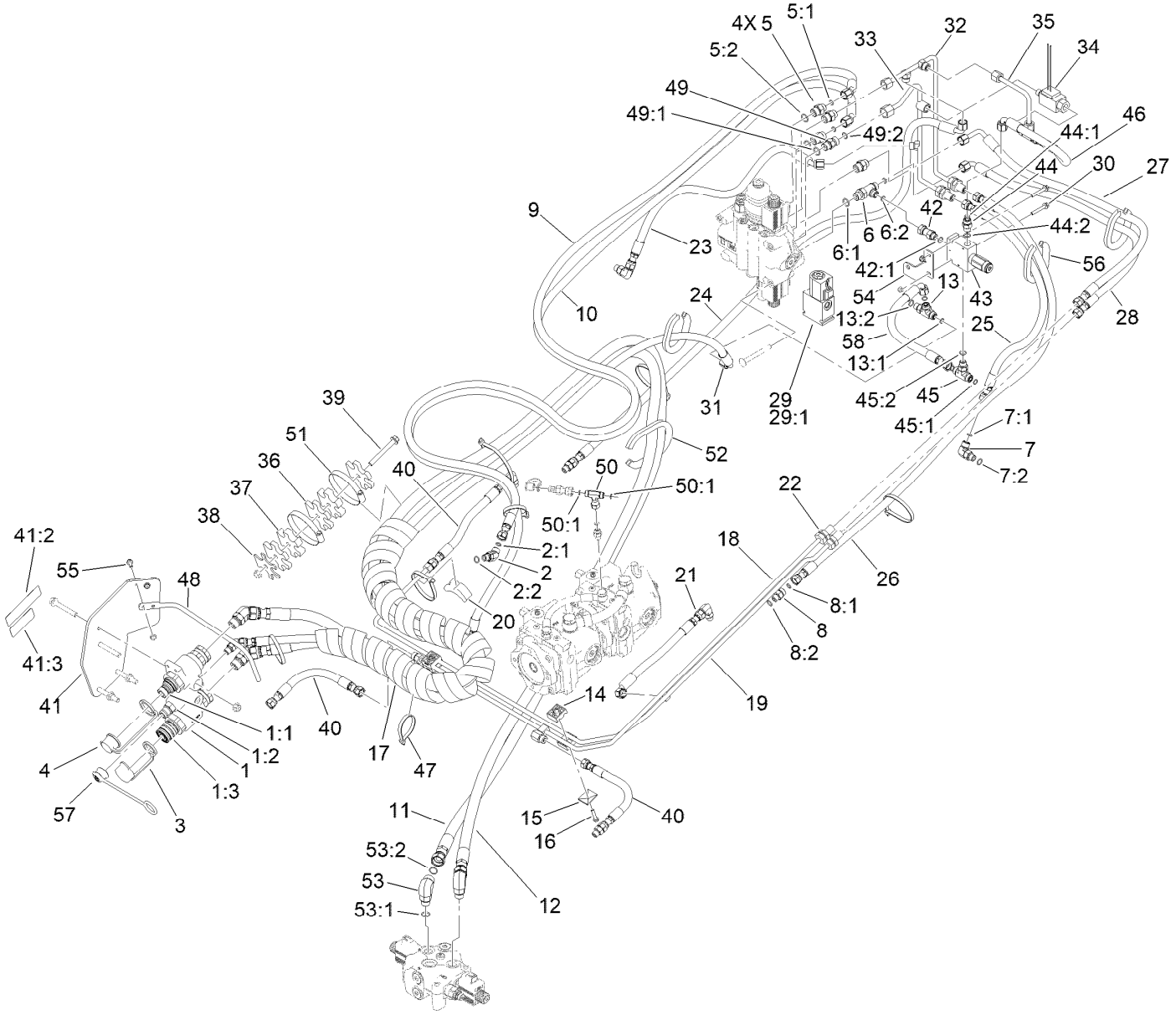

Manifold Hydraulic Assembly (continued)

Ref.	Part Number	Qty.	Description
1	150-2410	1	Manifold-Qdc
1:1	150-3702	1	Kit-Male Coupler, 1/2"
1:2	150-3703	1	Kit-Male Coupler, 3/8"
1:3	150-3704	1	Kit-Female Coupler, 1/2"
2	340-87	2	Fitting-Elbow, 45 DEG
2:1	237-22	1	O-Ring
2:2	237-42	1	O-Ring
3	100-8816	1	Cap-Dust, Coupler
4	100-8815	1	Cap-Dust, Nipple
5	340-3	4	Fitting-Straight
5:1	237-22	1	O-Ring
5:2	237-79	1	O-Ring
6	117-9881	1	Fitting-Tee
6:1	237-79	1	O-Ring
6:2	237-22	2	O-Ring
7	340-77	4	Fitting-Elbow, 90 DEG
7:1	237-22	1	O-Ring
7:2	237-42	1	O-Ring
8	340-2	5	Fitting-Straight
8:1	237-22	1	O-Ring
8:2	237-42	1	O-Ring
9	140-4462	1	HYD Hose ASM
10	140-5976	1	HYD Hose ASM
11	140-4469	1	HYD Hose ASM
12	140-4470	1	HYD Hose ASM
13	340-86	2	Fitting-Tee
13:1	237-22	2	O-Ring
13:2	237-42	1	O-Ring
14	137-5275	2	Clamp-Hose
15	127-8424	2	Plate-Clamp, Retainer
16	321-13	2	Screw-HH
17	140-5902	1	Wrap-Hose
18	140-5985	1	HYD Tube ASM
19	140-5986	1	HYD Tube ASM
20	137-0146	1	Block-Hardline
21	133-1619	1	HYD Hose ASM
22	340-70	4	Nut-Lock
23	140-5911	1	HYD Hose ASM
24	140-5912	1	HYD Hose ASM
25	140-5913	1	HYD Hose ASM
26	140-5914	1	HYD Hose ASM
27	140-5915	1	HYD Hose ASM
28	140-6031	1	HYD Hose ASM
29	158-627	1	Solenoid Valve
29:1	217-770	1	Solenoid Coil
30	32105-18	2	Screw-HHF
31	140-5964	1	HYD Hose ASM
32	161-6949	1	HYD Tube ASM
33	163-3200	1	HYD Tube ASM
34	139-4848	1	Switch-Pressure,
35	140-5969	1	HYD Tube ASM
36	140-6007	3	Clamp-Hose
37	140-6008	2	Clamp-Hose
38	140-6045-03	1	Plate-Backer
39	3234-41	1	Screw-HHF
40	140-5987	3	HYD Hose ASM
41	140-6075	1	Mount-Qc
41:2	115-4855	1	Decal-Caution
41:3	139-1173	1	Decal-Warning
42	104-3779	1	Connector-Swivel, Straight
42:1	237-42	1	O-Ring
43	139-4856	1	Valve-Sequence
44	114-7783	1	Fitting-Straight
44:1	237-22	1	O-Ring
44:2	237-42	1	O-Ring
45	340-94	1	Adapter
45:1	237-22	2	O-Ring
45:2	237-42	1	O-Ring
46	140-5970	1	HYD Hose ASM
47	3334-945	11	Tie-Cable
48	140-6058	1	Guide-Hoses
49	145-4333	1	Valve-Check
49:1	237-79	1	O-Ring
49:2	237-30	1	O-Ring
50	99-3477	1	Fitting-Tee
50:1	237-21	2	O-Ring
51	144-4255	2	Clamp-Band/Screw
52	133-8572	1	Trim-Seal
53	340-153	2	Fitting-Elbow, 90 DEG
53:1	237-79	1	O-Ring
53:2	237-151	1	O-Ring
54	144-4369-03	1	Bracket-Mount, Valve
55	115-5103	2	Screw-HHF
56	133-8571	3	Trim-Seal
57	131-6069	1	Cap-Dust, Nipple
58	163-3201	1	HYD Hose ASM

Console Assembly

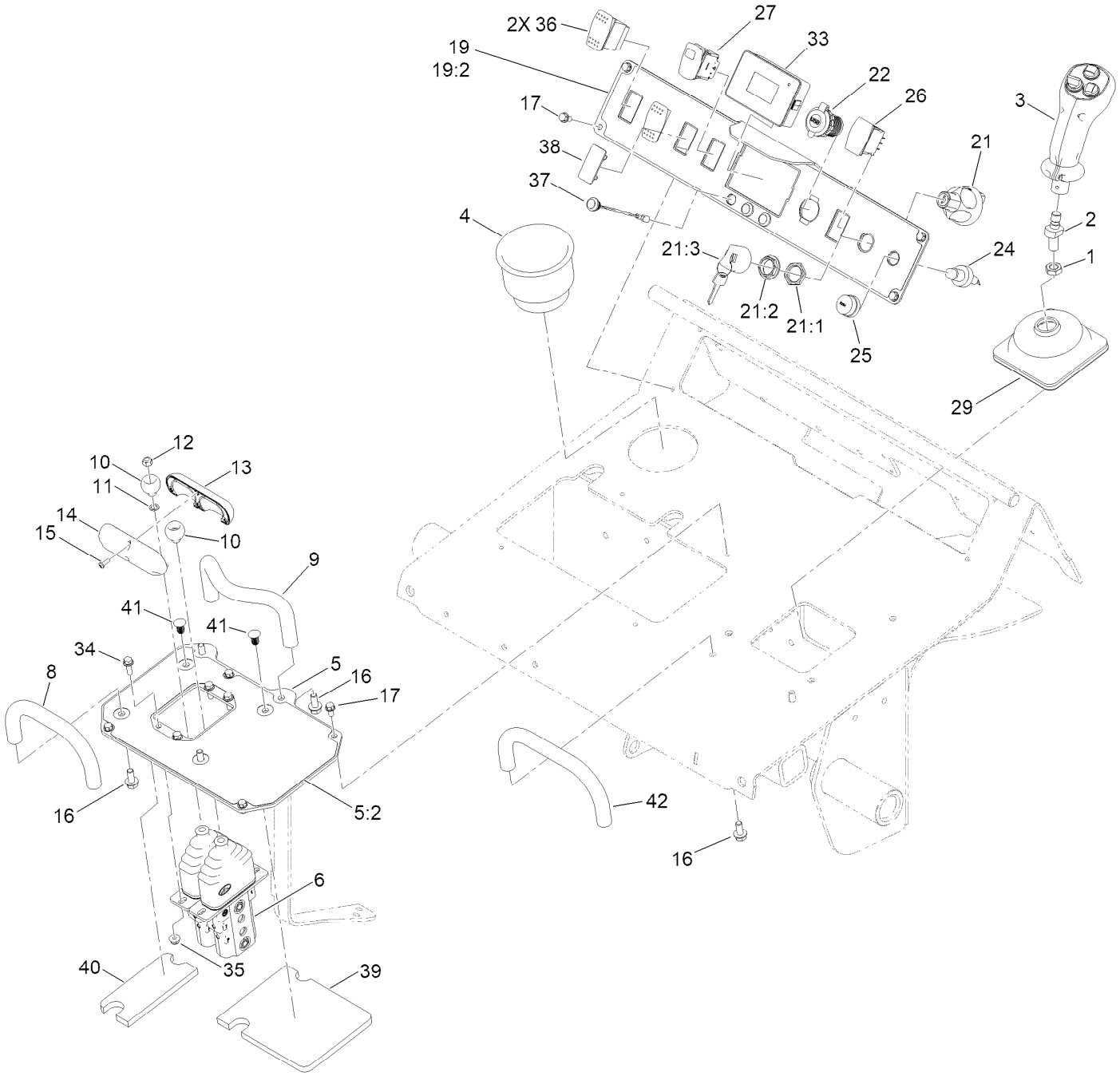

Console Assembly (continued)

Ref.	Part Number	Qty.	Description
1	51-2070	1	Nut
2	144-0757	1	Shaft-Control
3	139-4736	1	Handle-Joystick,
4	AU8EO24121	1	Cup-Holder
5	130-5321	1	Plate-Control
5:2	131-0708	1	Decal-Control Panel
6	145-3279	1	Valve-Control (Traction)
8	112-2620	1	Bar-Reference
9	138-0791	1	Bar-Reference
10	130-7723	2	Ball-Traction
11	75-5470	2	Spacer-Bearing
12	3296-42	2	Nut-Lock, NI
13	130-7692	1	Handle-Control
14	131-9162	1	Handle-Traction
15	94-6961	4	Screw
16	3234-5	6	Screw-HHF
17	32144-4	8	Screw-HWH
19	140-6061	1	Plate-Controls,
19:2	161-9442	1	Decal-Console
21	161-4693	1	Switch-Ignition
21:1	121-5160	1	Nut-Hex
21:2	122-2704	1	Nut-Face, M22 (Plastic)
21:3	121-5162	1	Set-Key, Ignition
22	131-8388	1	Socket-USB
24	112-3324	1	Switch-Horn
25	112-3313	1	Nut-Weatherproof
26	100-1535	1	Switch-Rocker, (On)-Off-(On)
27	122-3953	1	Switch-Rocker, (On)-Off-(On)
29	163-3207	1	Boot
33	122-1201	1	Module-Display
34	115-5103	4	Screw-HHF
35	104-7201	4	Nut-HF, NI
36	95-8999	2	Switch-Rocker, On-None-On
37	136-9678	3	Cable Assy-Pushbutton
38	99-7420	1	Plug-Hole
39	132-8414	1	Foam-Shield, Heat
40	132-8415	1	Foam-Shield, Heat
41	133-0875	2	Rivet-Push
42	145-4400	1	Bar-Reference

Control Valve Assembly No. 145-3279

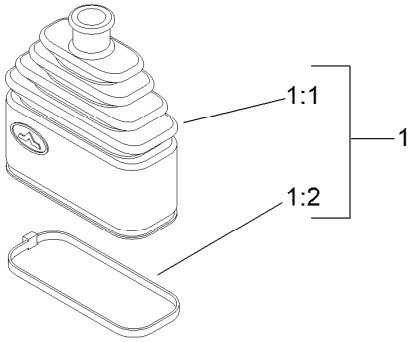

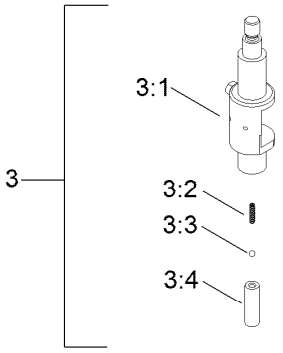

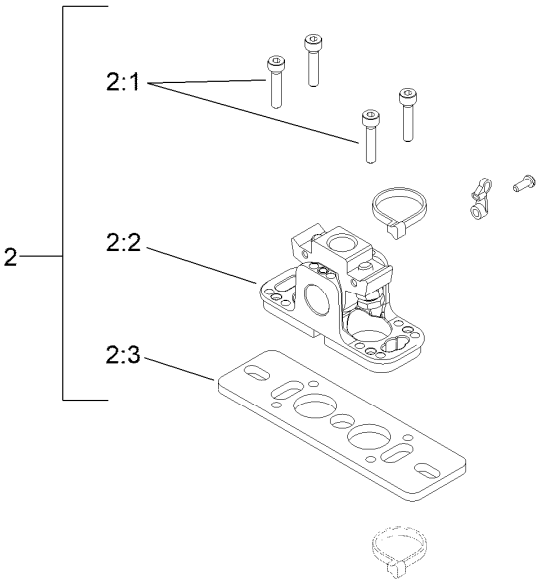

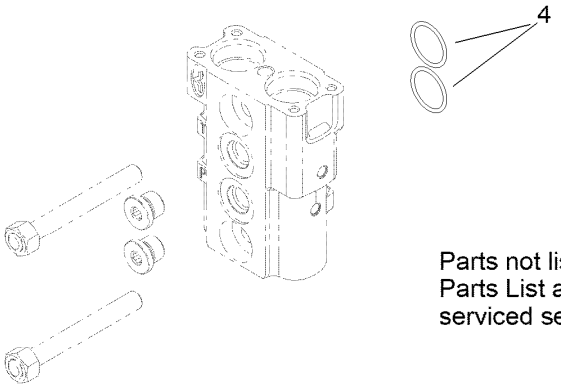

Parts not listed in Parts List are not serviced separately

Control Valve Assembly No. 145-3279 (continued)

Ref.	Part Number	Qty.	Description
1	132-6034	2	Bellow Kit
1:1		1	Bellow-Rubber ●
1:2		1	Tie-Cable ●
2	132-6036	2	Fulcrum Kit
2:1		4	Screw ●
2:2		1	Support Kit ●
2:3		1	Plate-Mounting ●

Ref.	Part Number	Qty.	Description
3	132-6037	2	Switch Holder Lever Kit
3:1		1	Lever-Holder, Switch ●
3:2		1	Spring-Return ●
3:3		1	Sphere ●
3:4		1	Holder-Spring ●
4	100-7246	2	O-Ring

● Not serviced separately

Loader Arm Assembly

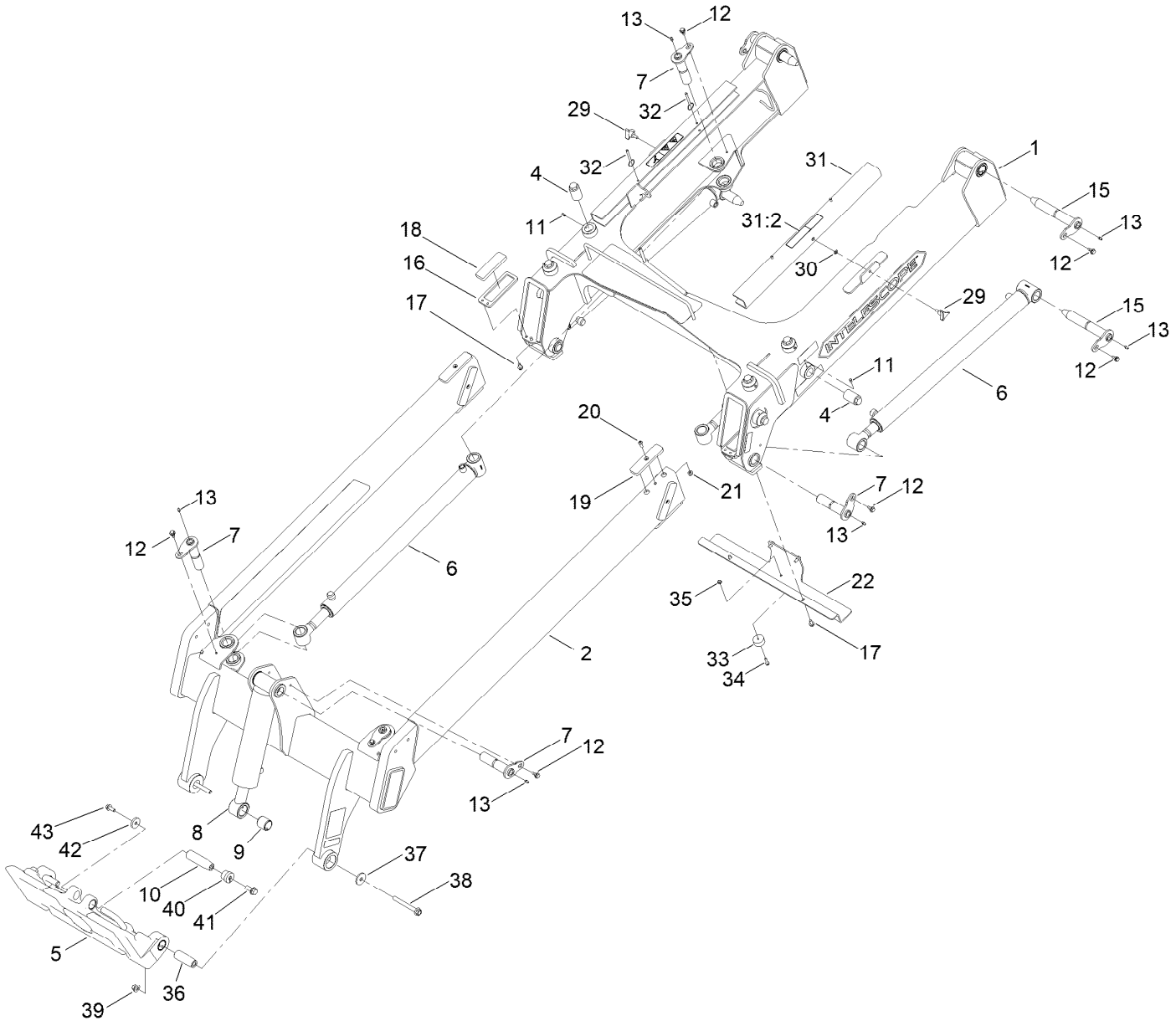

Loader Arm Assembly (continued)

Ref.	Part Number	Qty.	Description
1	140-6062	1	Loader Arm-Upper, ASM
2	140-6063	1	Loader Arm-Lower, ASM
4	132-8479	8	Screw-Slide, Adjustment
5	140-6017	1	Attachment Plate ASM
6	140-4528	4	HYD Cylinder ASM
7	137-0134	7	Flag Pin ASM
8	140-5951	1	CYL-HYD
8:1	161-9430	1	Kit, Seal ●
9	147-6875	1	Bushing-Spring
10	140-6076	1	Pin-Tapered
11	126-3824	8	Screw-Set, SQH
12	99-5105	11	Screw-Shoulder
13	302-5	11	Fitting-Grease
15	137-0132	4	Pivot Pin ASM
16	140-4544-05	2	Retainer-Pad
17	32144-14	8	Screw-HWHTF
18	140-4545	2	Strip-Slide,Lower
19	140-4546	8	Strip-Slide,
20	3274-32	8	Screw-HSBH

Ref.	Part Number	Qty.	Description
21	119-4041	8	Nut-HF
22	140-4547-05	1	Guard-Hydraulics
29	109-3351	2	Knob
30	109-5667	2	Nut-Push
31	140-6064	2	Lock-Arm
31:2	115-4858	2	Decal-Danger
32	108-0094	4	Pin-Cotterless
33	94-4548	1	Bumper-Recessed
34	120-4654	1	Screw-HHF
35	104-7201	1	Nut-HF, NI
36	140-6019	2	Pin-Link,Taper
37	106-2008	2	Washer-Case Hard
38	117-3176	2	Screw-HHF
39	139-1689	2	Nut-HF
40	181-1002	1	Insert-Tapered
41	137-4653	1	Screw-HHF
42	1-543610	1	Washer-Flat
43	3234-42	1	Screw-HHF

● Not illustrated

Upper Loader Arm Assembly No. 140-6062

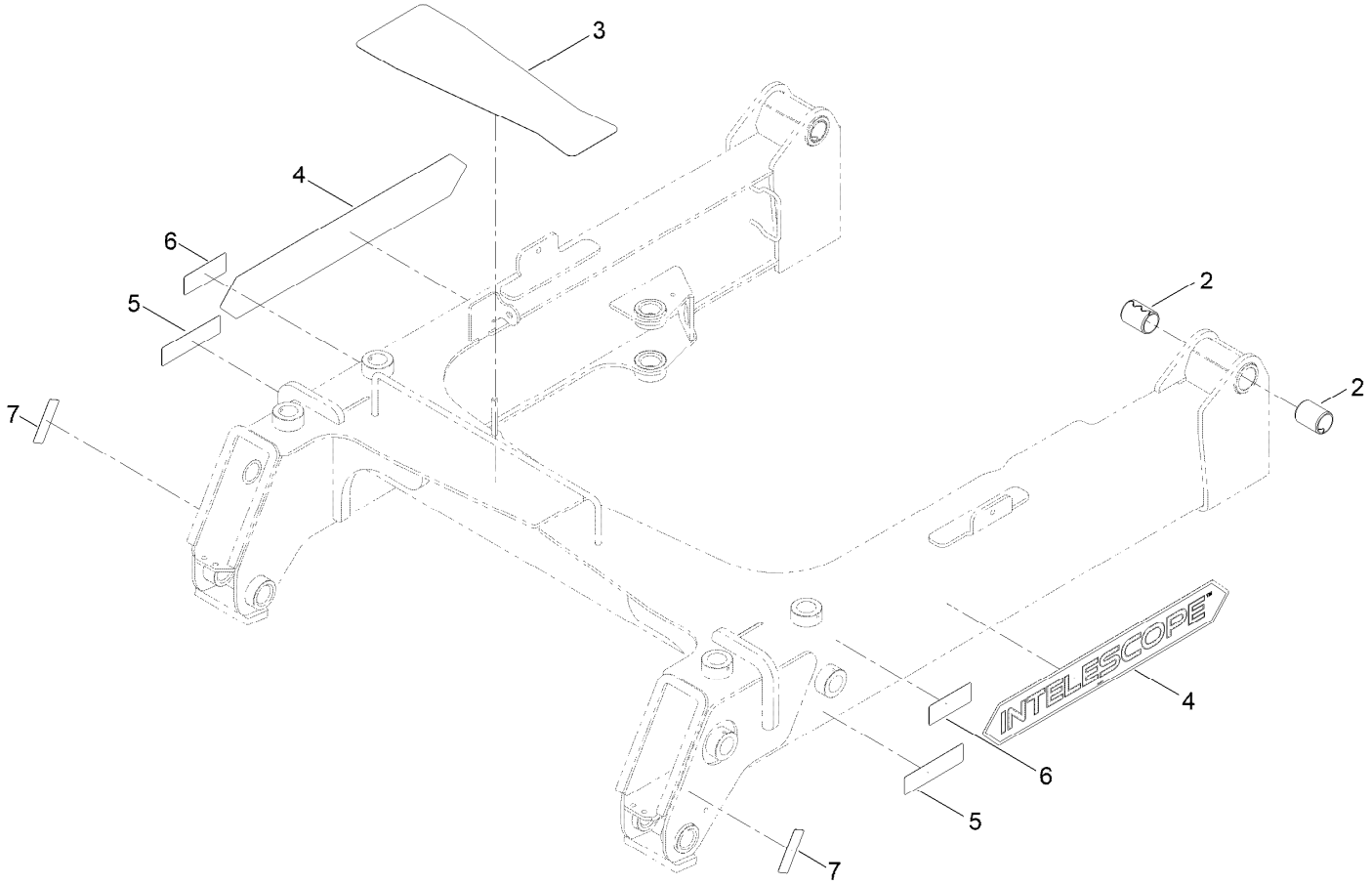

Upper Loader Arm Assembly No. 140-6062 (continued)

Ref.	Part Number	Qty.	Description
2	137-0126	4	Bushing-Spring
3	140-6024	1	Strip - Wear
4	164-1433	2	Decal-Intelescope, Red
5	139-1158	2	Decal-Warning
6	139-1159	2	Decal-Warning
7	120-0625	2	Decal-Warning

Lower Loader Arm Assembly No. 140-6063

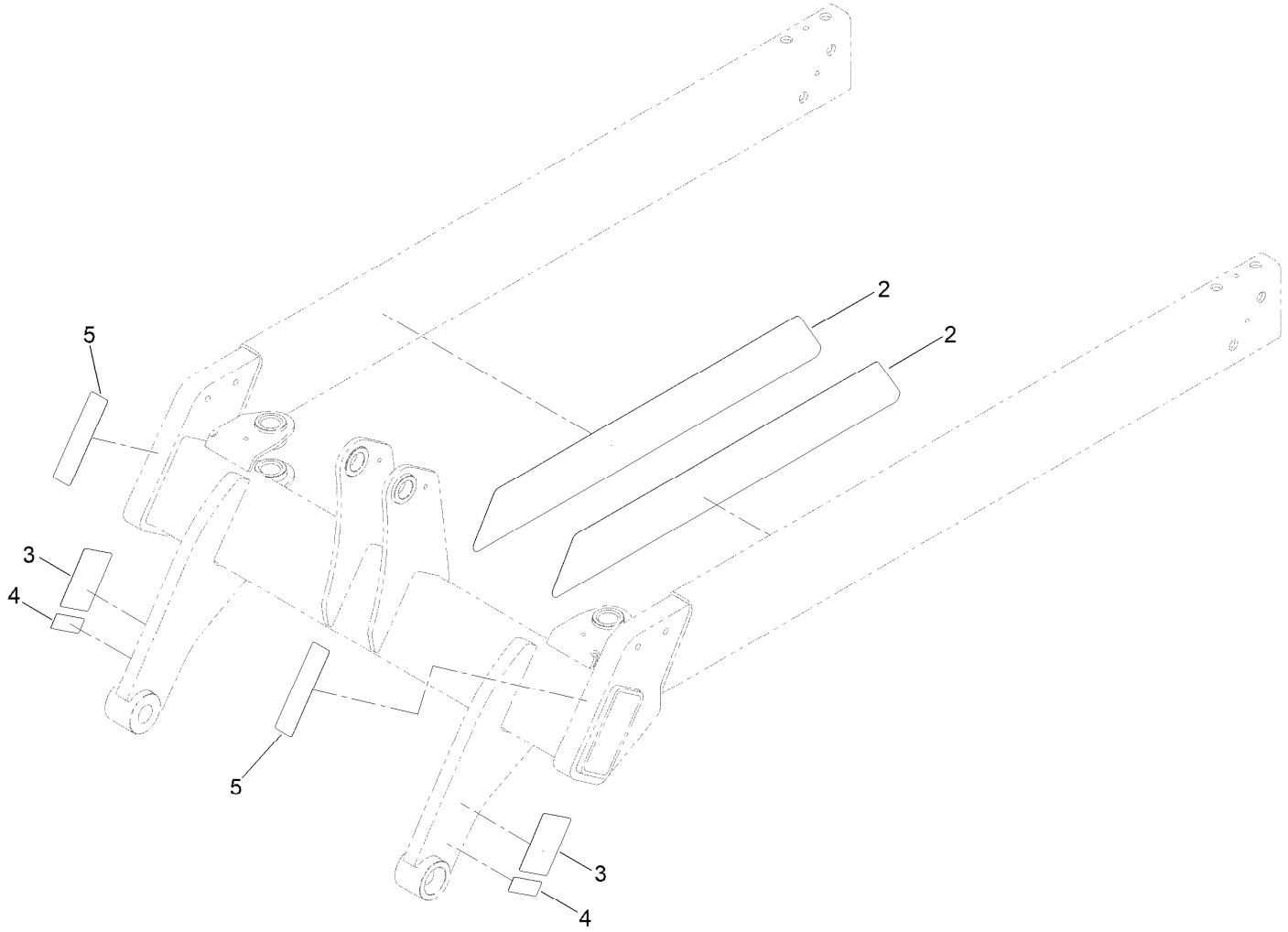

Lower Loader Arm Assembly No. 140-6063 (continued)

Ref.	Part Number	Qty.	Description
2	137-5409	2	Decal-Extension
3	145-3252	2	Decal - Warning, Bucket
4	120-0625	2	Decal-Warning
5	131-9290	2	Tape-Reflective

Attachment Plate Assembly No. 140-6017

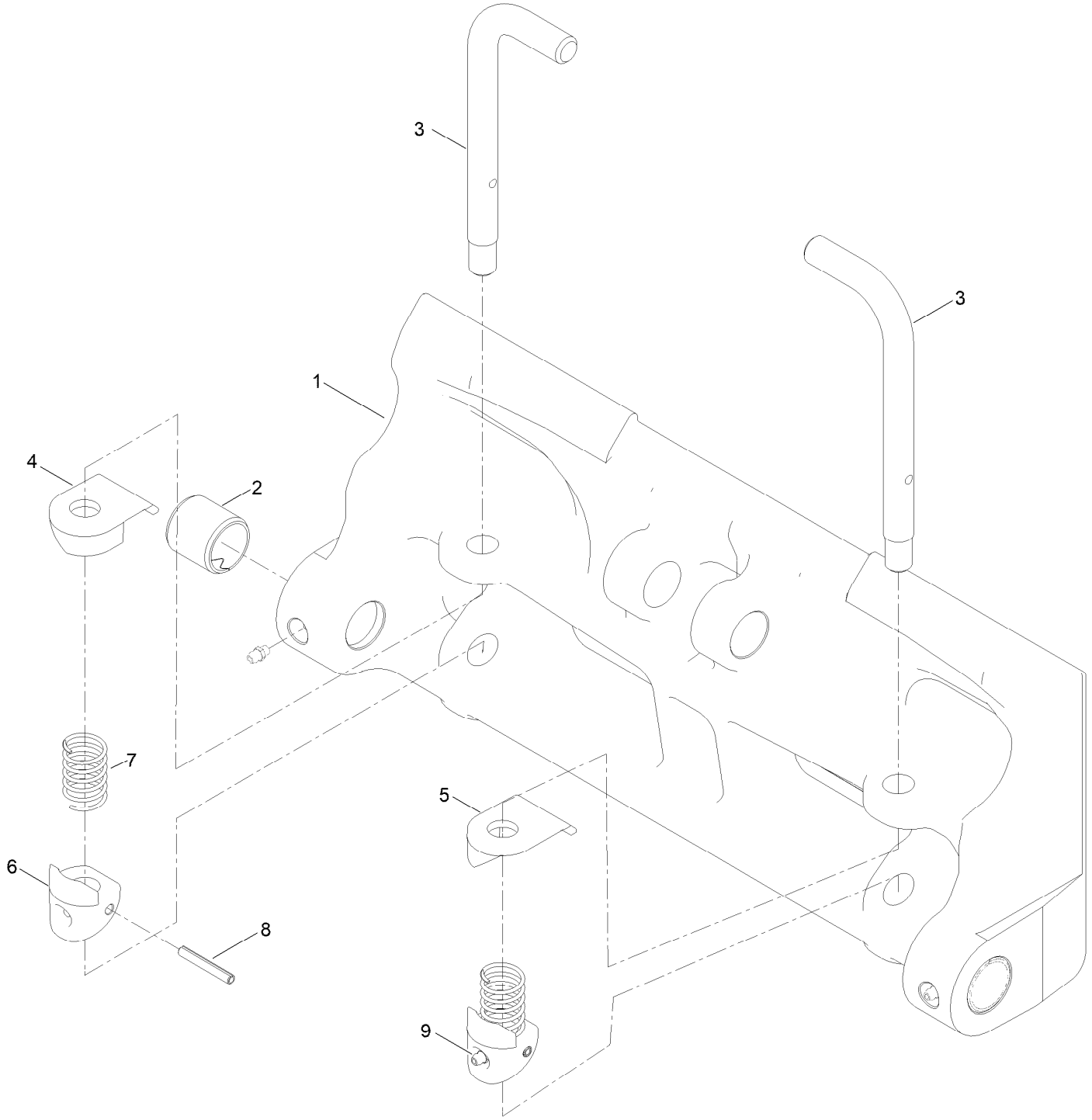

Attachment Plate Assembly No. 140-6017 (continued)

Ref.	Part Number	Qty.	Description
1	140-5992	1	Qtach
2	147-6875	2	Bushing-Spring
3	163-1160	2	Pin-Locking
4	140-5983	1	Stop-Pin, LH
5	140-5991	1	Stop-Pin, RH
6	140-5981	2	Cam-Qtach
7	100-9782	2	Spring-Compression
8	32121-32	2	Pin-Roll
9	302-5	4	Fitting-Grease

Hydraulic Cylinder Assembly No. 140-4528

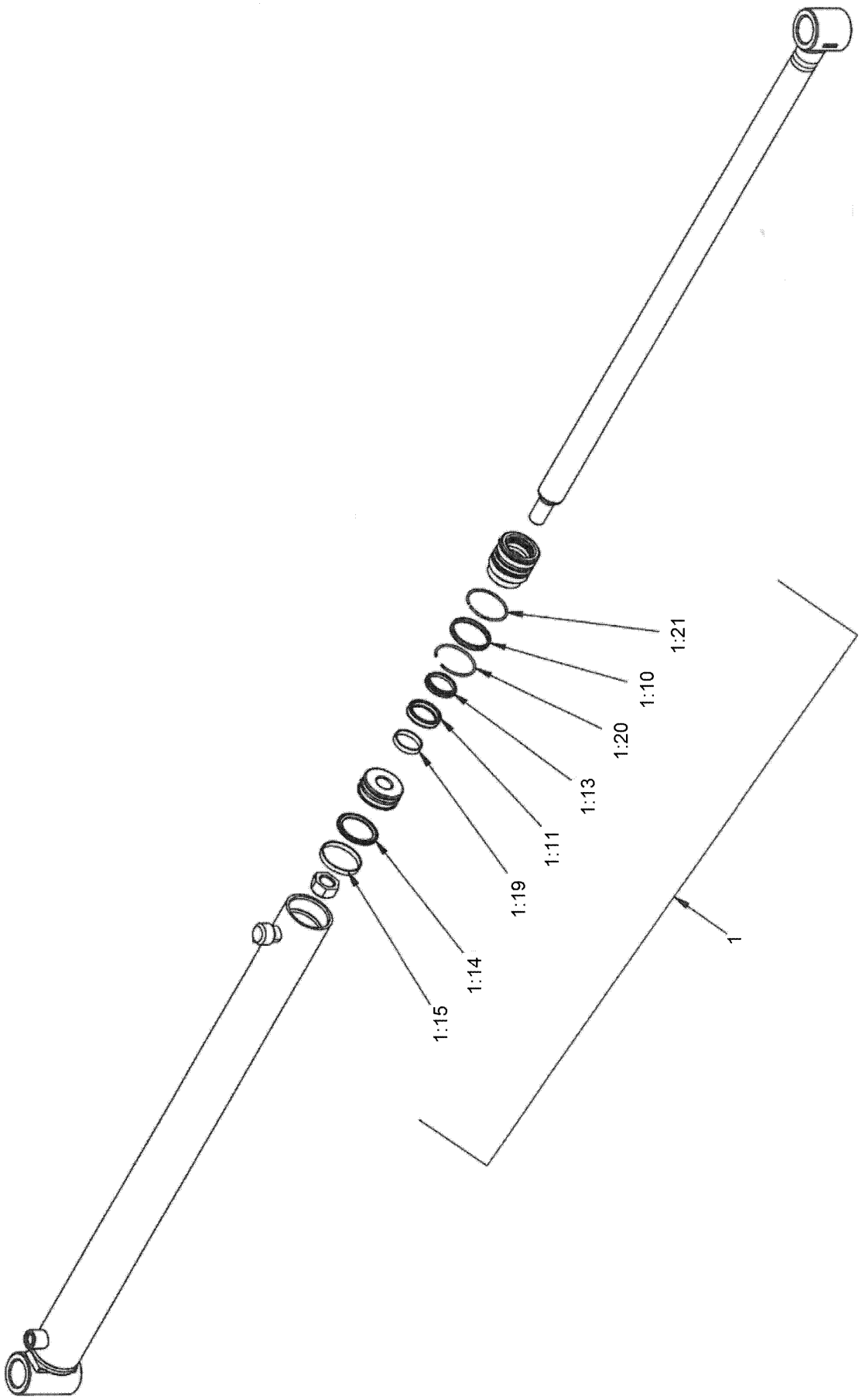

Hydraulic Cylinder Assembly No. 140-4528 (continued)

Ref.	Part Number	Qty.	Description
1	161-7170	1	Kit-Seal, Hydraulic CYL
1:10		1	Seal-Dual ●
1:11		1	Seal-Rod ●
1:13		1	Rod Wiper ●
1:14		1	Seal-Piston ●
1:15		1	Piston Wear Ring ●
1:19		1	Rod Wear Ring ●
1:20		1	Internal Retaining Ring ●
1:21		1	External Retaining Ring ●

● Not serviced separately

Platform Assembly

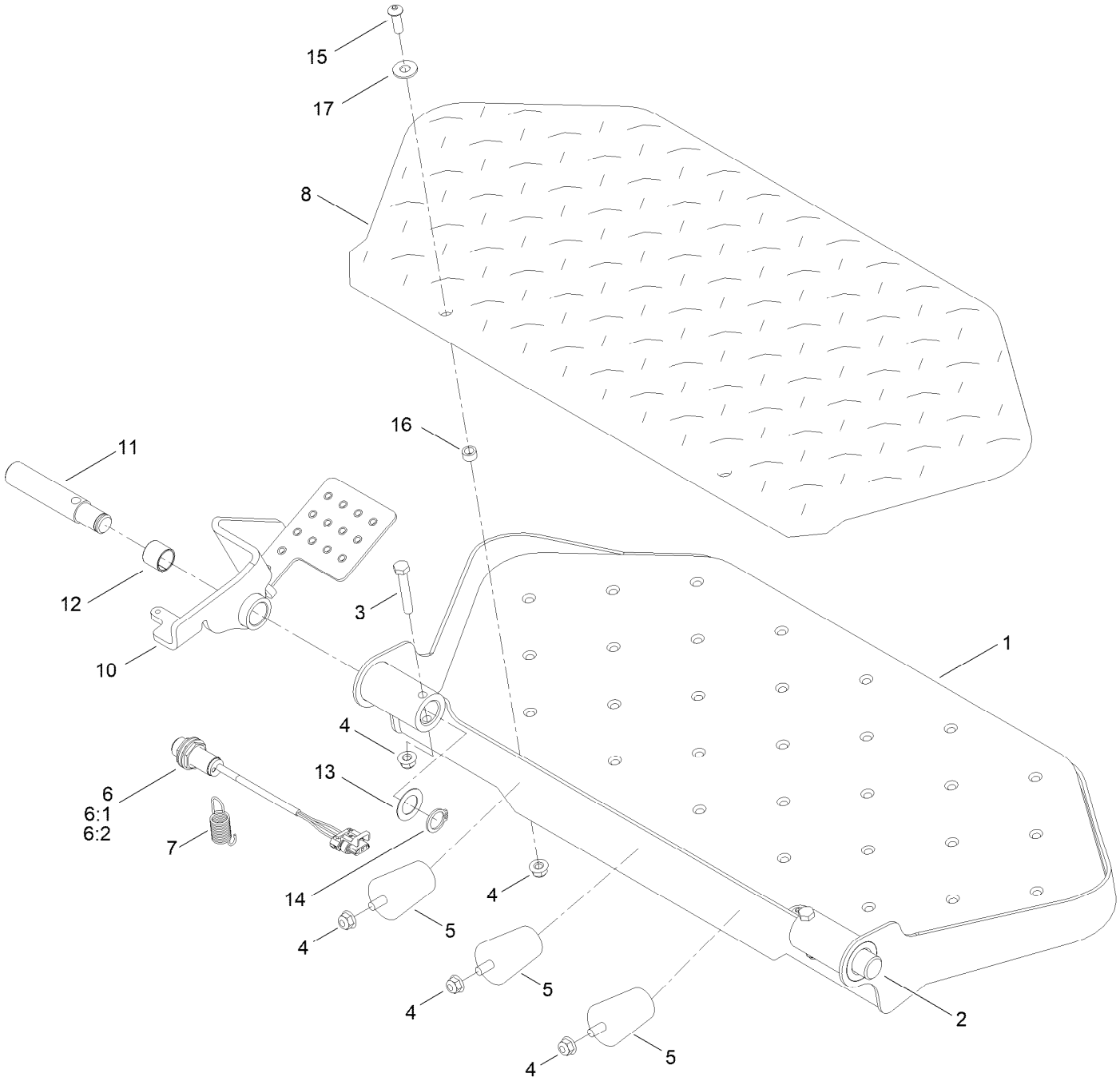

Platform Assembly (continued)

Ref.	Part Number	Qty.	Description
1	138-2420-05	1	Platform ASM [blk-Txt]
2	125-3749	1	Pin-Cylinder
3	322-10	2	Screw-HH
4	119-4041	7	Nut-HF
5	110-5070	3	Bumper
6	115-5300	1	Proximity Sensor ASM
6:1	117-3207	2	Nut-Hex
6:2	117-3208	2	Washer-Lock, Internal Tooth
7	137-6189	1	Spring-Extension

Ref.	Part Number	Qty.	Description
8	144-4256	1	Pad-Platform
10	140-1811-05	1	Foot Pedal ASM, [blk-Txt]
11	140-1814	1	Pin-Pivot
12	94-9609	1	Bushing-Straight
13	9202574	1	Washer-Flat
14	32120-93	1	Ring-Retaining
15	109-4872	2	Screw-HSH
16	85-9120	2	Spacer-Pivot, Tilt
17	3256-3	2	Washer-Flat

Hood and Cover Assembly

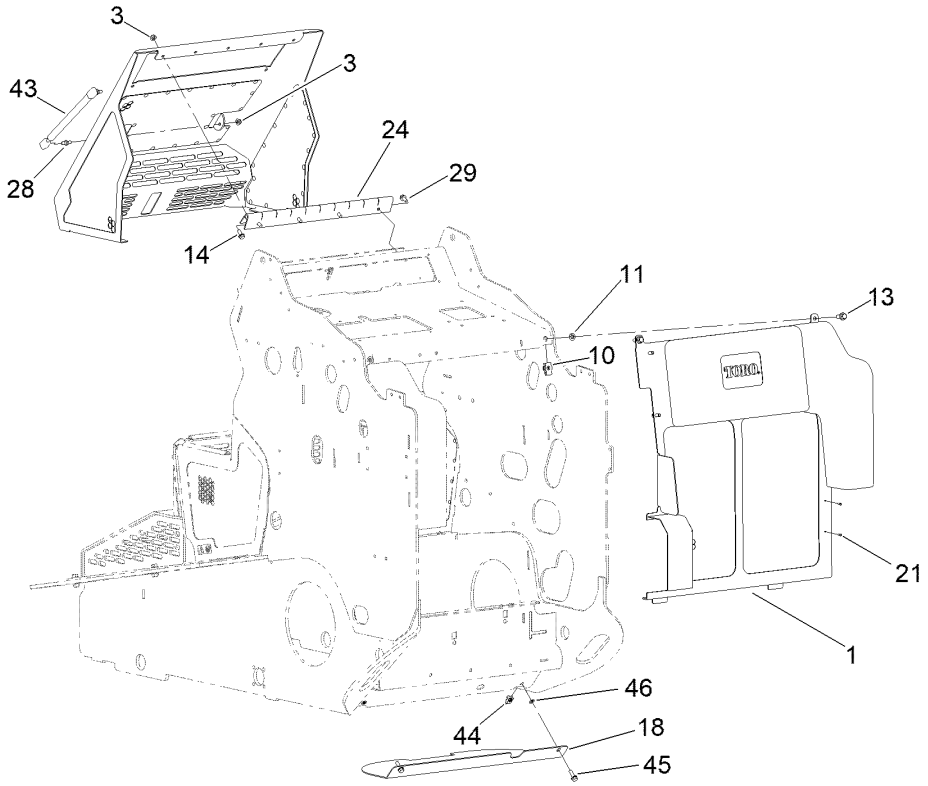

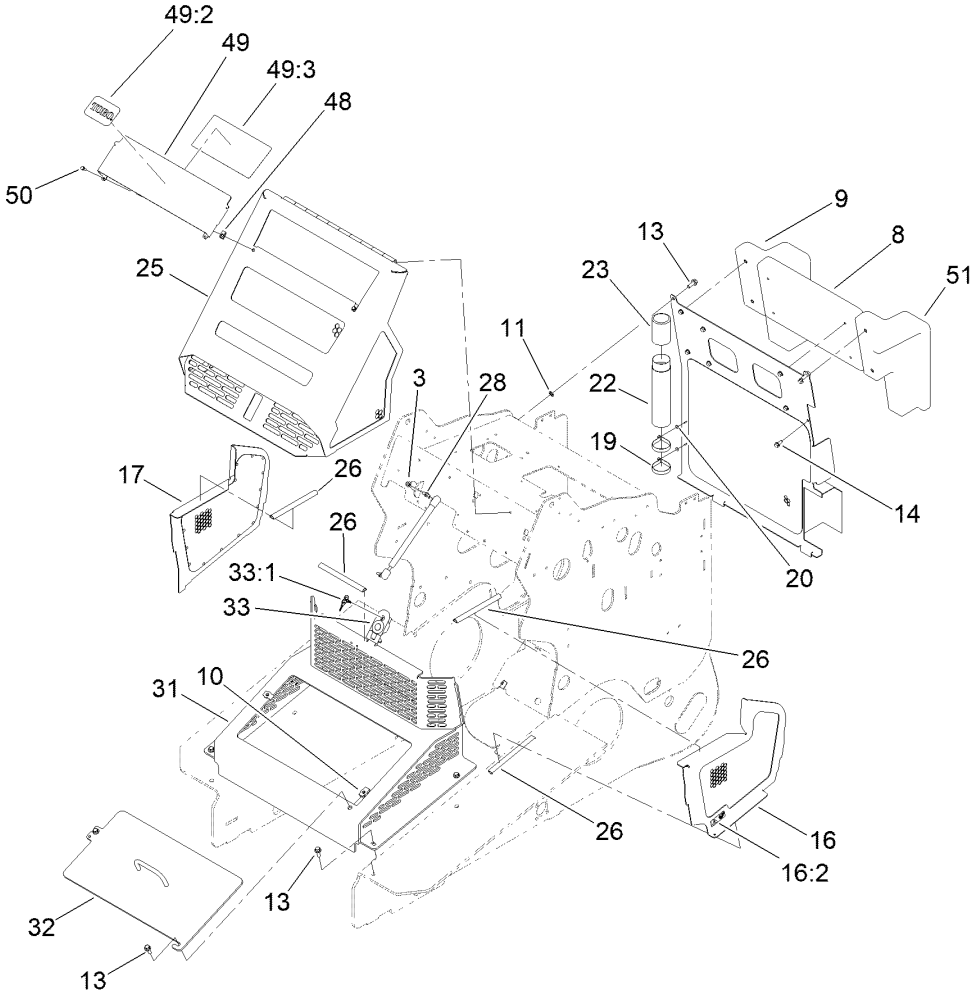

Hood and Cover Assembly (continued)

Ref.	Part Number	Qty.	Description
1	140-6079-05	1	Cover-Rear [blk-Txt]
3	119-4041	7	Nut-HF
8	140-4499	1	Cushion-Pad
9	140-4500	1	Cushion-Pad
10	105-4886	4	Nut-Tinnerman
11	107-3154	2	Nut-Push
13	3234-42	8	Screw-HHF
14	3234-5	13	Screw-HHF
16	140-6065	1	Cover
16:2	115-2047	1	Decal-Surface, Hot
17	144-4379-05	1	Cover-Side, RH [blk-Txt]
18	140-4506-01	1	Cover-Bottom
19	2412-120	2	Clamp-R
20	3269-10	2	Washer-Back
21	3269-17	2	Rivet-Pop
22	104-7050	1	Tube-Manual
23	104-7048	1	Cap-Housing
24	140-1830	1	Hinge-Hood
25	140-5940-05	1	Hood [blk-Txt]

Ref.	Part Number	Qty.	Description
26	140-5942	6	Seal-Bulb
28	103-5752	2	Stud-Ball
29	32144-14	4	Screw-HWHTF
31	140-5928-05	1	Cover-Front [blk-Txt]
32	144-0828-05	1	Front Cover ASM, [blk-Txt]
33	163-7727	1	Latch-Compression, Locking
33:1	145-4488	1	Keys-Latch
43	117-9652	1	Spring-Gas
44	115-7721	2	Nut-Clip, U
45	3234-29	2	Screw-HHF
46	109-5667	2	Nut-Push
48	107069	2	Clip
49	145-4276	1	Hood Scoop ASM
49:2	94-2579	1	Decal
49:3	145-4274	1	Decal-Service
50	32105-15	2	Screw-HWH
51	144-0796	1	Cushion-Pad

Electrical Assembly

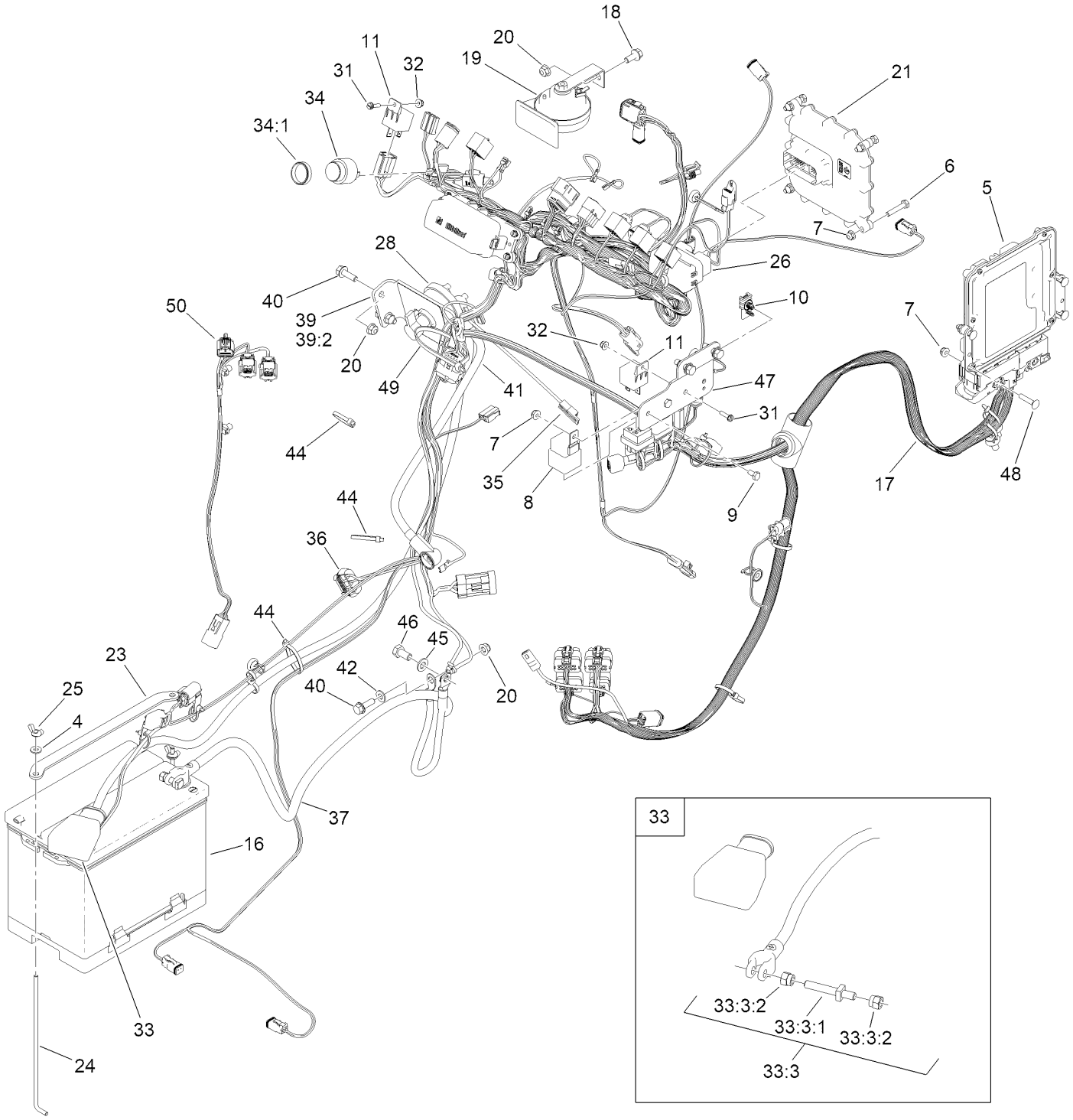

Electrical Assembly (continued)

Ref.	Part Number	Qty.	Description
4	3256-22	2	Washer-Flat
5	161-1751	1	Electronic Control Unit
6	321-13	4	Screw-HH
7	104-7201	10	Nut-HF, NI
8	99-7430	2	Relay-Mini
9	321-2	1	Screw-HH
10	32180-103	1	Clip-Connector
11	99-7435	2	Relay
16	106-5189	1	Battery - Wet, 12V, 690 CCA
17	122-2672	1	Harness-Wire, Engine T4
18	3234-5	1	Screw-HHF
19	116749	1	Horn
20	119-4041	6	Nut-HF
21	127-2770	1	Controller
23	136-5755-03	1	Strap-Hold Down, Battery
24	136-5756	2	Rod-Hold Down, Battery
25	1-803038	2	Wingnut
26	122-4043	1	Harness-Wire, Main
28	AUR52278	1	Switch-Disconnect, Master
28:1	3253-21	2	Washer-Lock ●
28:2	126-0687	2	Nut-Hex ●
28:3	515-0040	1	Washer,Lock,Int,.91X1.387X.056,St,Rohs ●
31	32105-13	6	Screw-HWH
32	120-4578	6	Nut-HF
33	122-2244	1	Cable-Battery, Rd ASM
33:3	112-9921	1	Bolt ASM
33:3:1	32180-107	1	Bolt-Clamp, Battery
33:3:2	32180-108	2	Nut-Hex Shoulder
34	80-9330	1	Audio Alarm ASM
34:1	104-5107	1	Nut-Plastic, Knurled
35	136-4862	1	Harness-Wire, Fusible Link
36	99-3441	1	Harness-Wire, Fusible Link
37	105-0115	1	Cable-Battery, Negative
39	145-4283	1	Bracket-Shutoff
39:2	131-8026	1	Decal-Battery Disconnect
40	3234-29	3	Screw-HHF
41	122-2245	1	Cable-Battery, Rd ASM
42	120-9683	1	Washer-Plain
44	3290-378	3	Tie-Cable
45	33095-00	1	Washer-Flat
46	33115-020	1	Screw-HH
47	144-0795-03	1	Bracket-Relays
48	3229-3	4	Screw-CARR
49	3334-945	1	Tie-Cable
50	122-2133	1	Harness-Wire, Dpf Sub-Harness

● Not illustrated

Wire Harness Assembly No. 122-2672

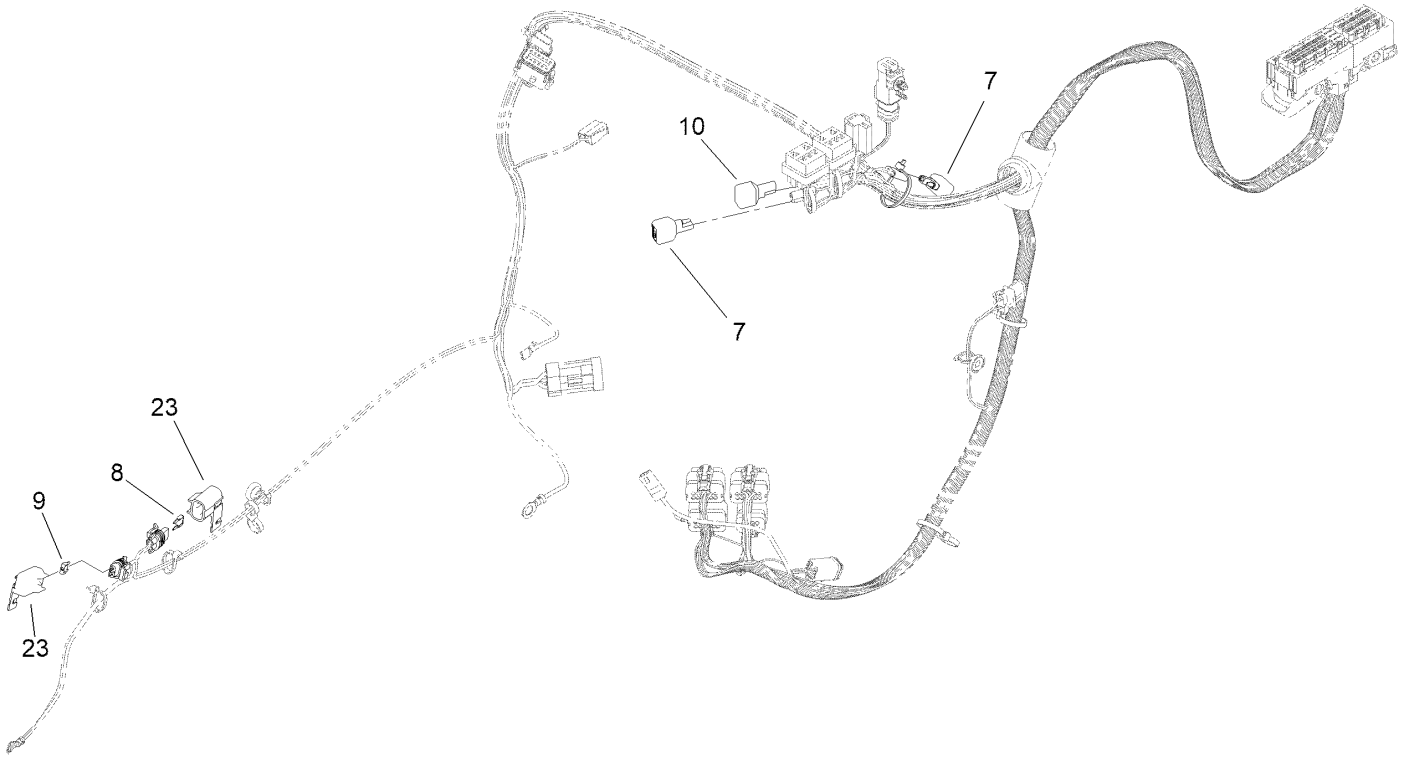

Wire Harness Assembly No. 122-2672 (continued)

Ref.	Part Number	Qty.	Description
7	100-4918	2	Diode
8	121-8861	1	Fuse-Mini Blade, 2 Amp
9	121-8866	1	Fuse-Mini Blade, 10 Amp
10	104-4022	1	Resistor-75 Ohm
23	32180-101	2	Cover-Fuse, Single

Cylinder Block Assembly

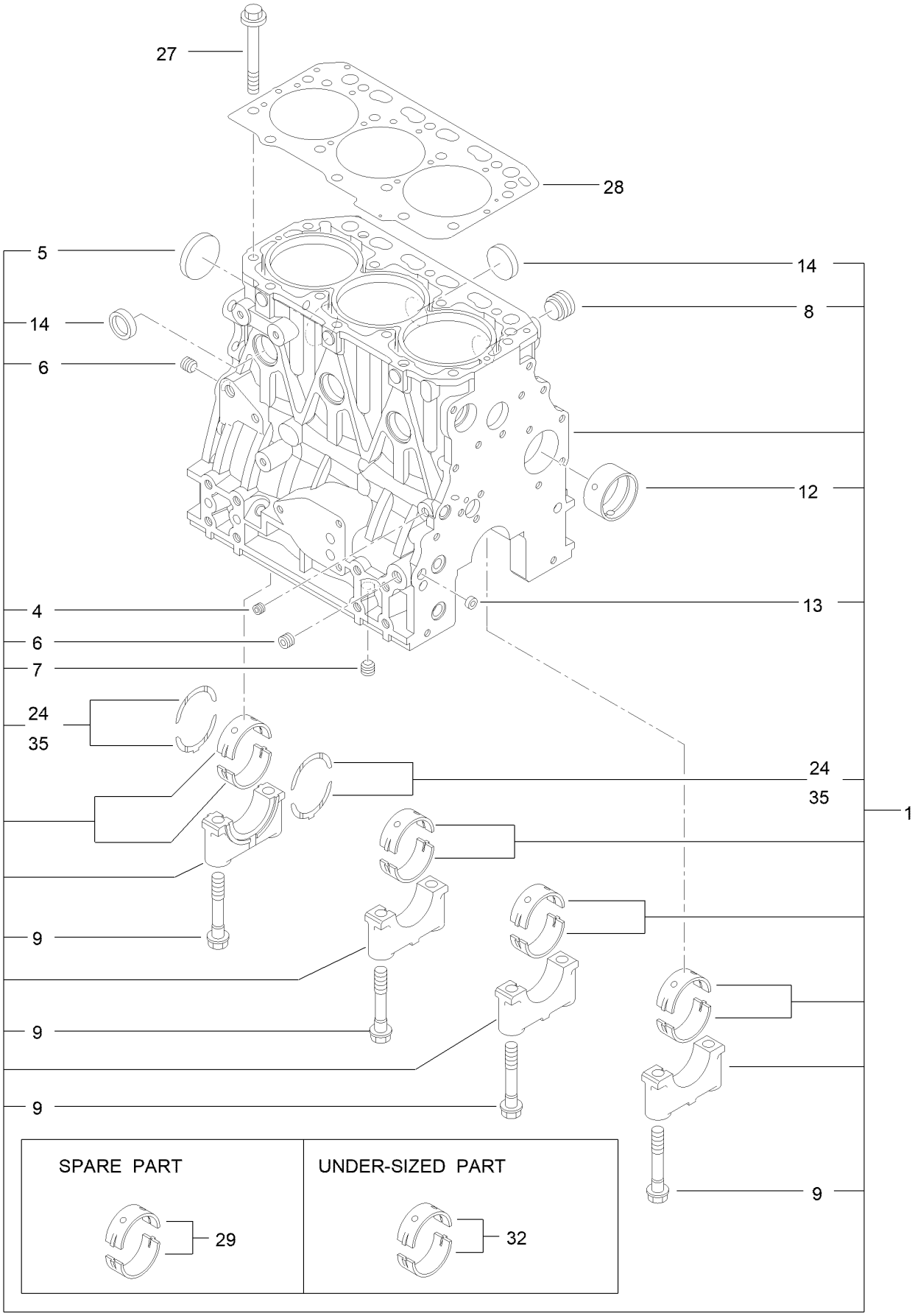

Cylinder Block Assembly (continued)

Ref.	Part Number	Qty.	Description
1	127-4717	1	Cylinder Block ASM
4	125-6969	1	Plug
5	125-6980	1	Plug
6	125-6973	2	Plug
7	125-6973	1	Plug
8	125-7170	1	Plug
9	125-7007	8	Bolt
12	125-7108	1	Bushing
13	125-7237	1	Plug
14	125-7239	6	Plug
24	125-7010	2	Metal-Thrust
27	125-7006	14	Bolt
28	127-4716	1	Head Gasket ASM
29	125-6981	4	Metal-Main
32	125-7009	4	Metal-Main (0.25)
35	125-7011	1	Metal-Thrust (0.25)

Gear Housing Assembly

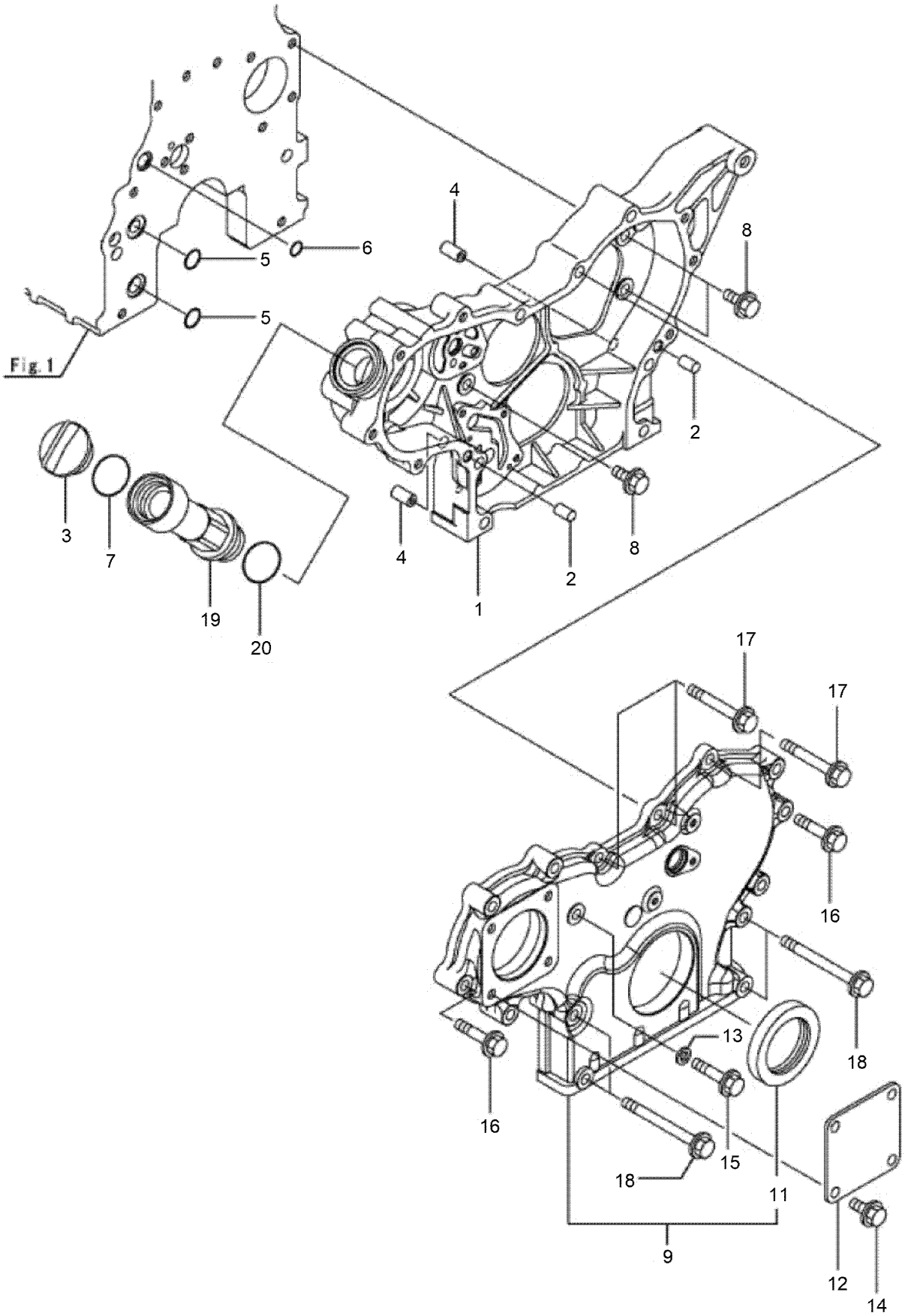

Gear Housing Assembly (continued)

Ref.	Part Number	Qty.	Description
1	127-3023	1	Case-Gear
2	125-6995	2	Pin
3	125-6972	1	Cover-Filler
4	125-7107	2	Pipe
5	125-6909	2	O-Ring
6	127-2973	1	O-Ring
7	125-7197	1	O-Ring
8	100-6928	3	Bolt
9	127-3024	1	Gearcase Cover ASM
11	125-6944	1	Seal-Oil
12	125-6977	1	Cover
13	125-7174	1	Washer-Seal
14	100-6928	4	Bolt
15	125-7217	1	Bolt
16	125-7218	7	Bolt
17	125-7222	3	Bolt
18	125-7224	4	Bolt
19	127-3754	1	Pipe
20	125-7197	1	O-Ring

Flywheel Housing and Oil Sump Assembly

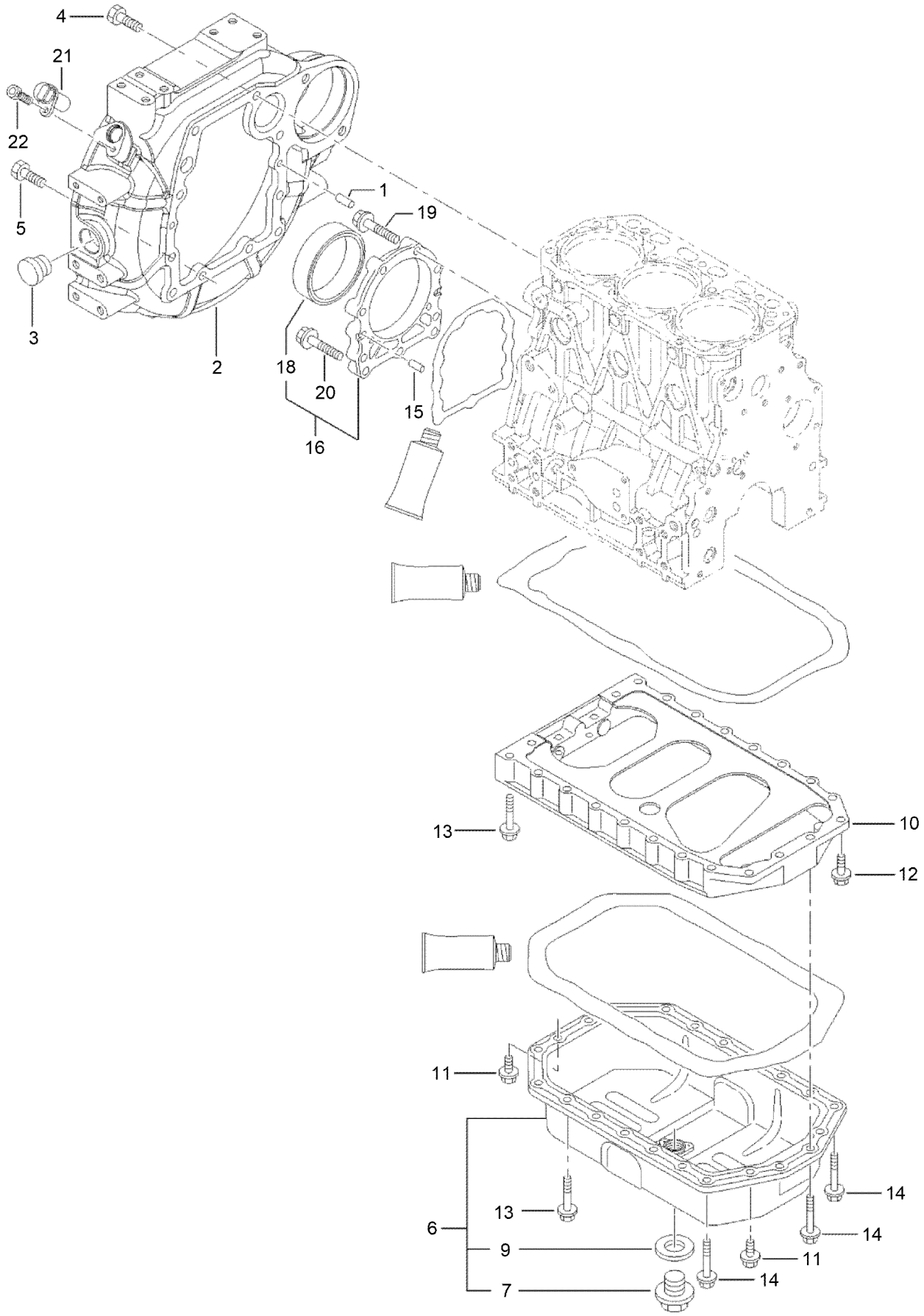

Flywheel Housing and Oil Sump Assembly (continued)

Ref.	Part Number	Qty.	Description
1	125-6995	2	Pin
2	127-3025	1	Housing-Flywheel
3	125-6910	1	Cap
4	125-7226	6	Bolt
5	125-7227	4	Bolt
6	127-3755	1	Oil Pan ASM
7	125-6912	1	Plug-Drain
9	125-7177	1	Washer-Seal
10	127-3756	1	Spacer
11	100-6928	4	Bolt
12	125-7215	2	Bolt
13	125-7219	16	Bolt
14	125-7220	4	Bolt
15	125-6995	2	Pin
16	125-6996	1	Case ASM
18	125-7106	1	Seal-Oil
19	125-7045	6	Bolt
20	125-7217	3	Bolt
21	127-3062	1	Sensor-Rev, Flywheel
22	127-3184	1	Bolt

Cylinder Head Assembly

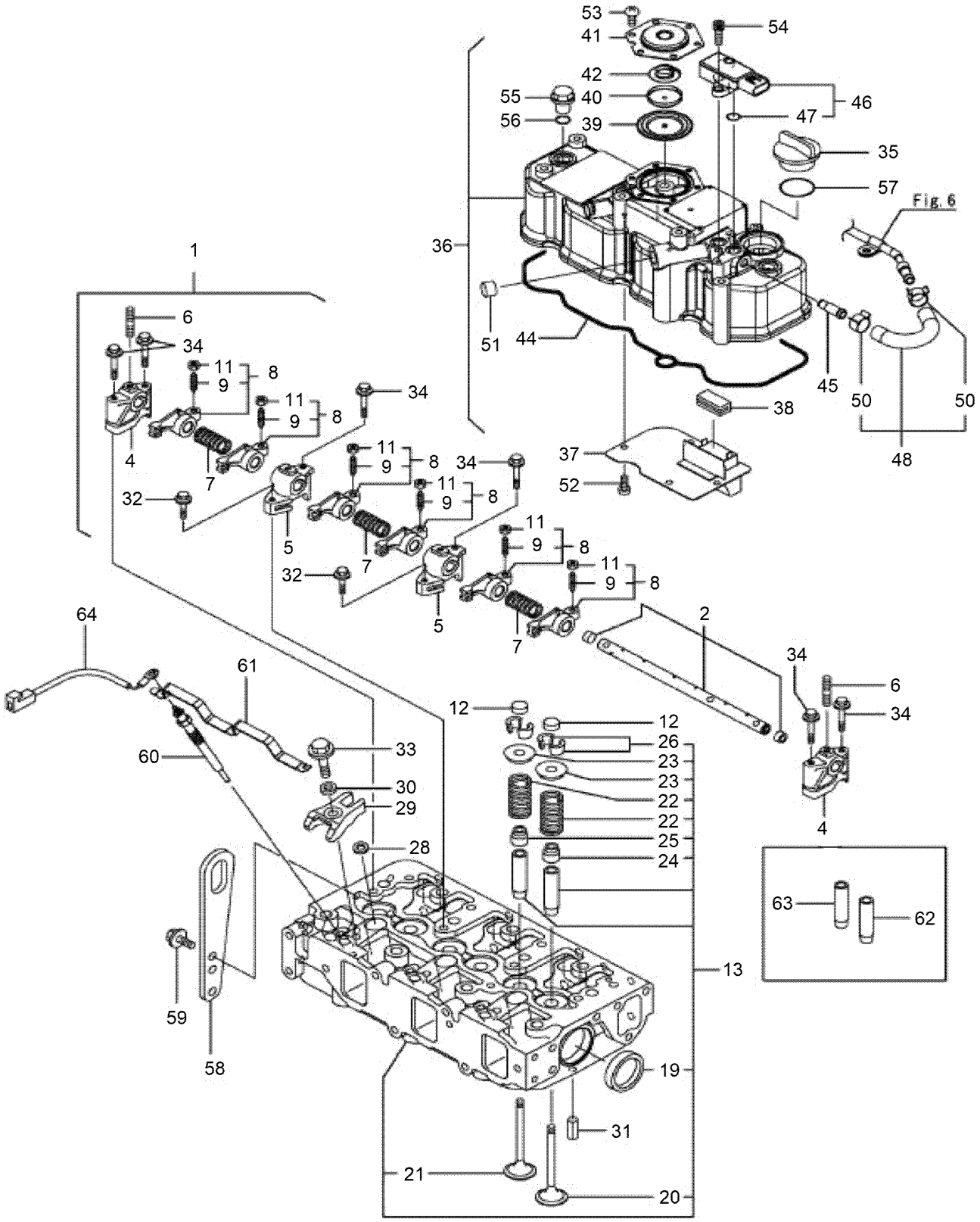

Cylinder Head Assembly (continued)

Ref.	Part Number	Qty.	Description
1	127-3757	1	Shaft ASM
2	127-3758	1	Shaft
4	127-2974	2	Support
5	127-2975	2	Support
6	135-4012	3	Bolt,Stud
7	127-2995	3	Spring
8	127-2989	6	Arm-Rocker
9	125-7013	6	Screw-Adjust, Valve
11	125-7014	6	Nut
12	127-2996	6	Cap-Valve
13	139-6014	1	Cylinder Head ASM
19	125-7240	2	Plug
20	127-2990	3	Valve
21	127-4710	3	Valve
22	127-3012	6	Spring
23	127-3013	6	Retainer-Spring
24	127-2986	3	Seal-Stem, Valve
25	127-3027	3	Seal-Stem, Valve
26	127-3186	6	Pin-Cotter
28	127-3021	3	Gasket-Injector
29	127-3028	3	Retainer-Injector
30	127-2980	3	Washer-Injector
31	125-7184	2	Pin-Spring
32	125-7215	2	Bolt
33	125-7217	3	Bolt
34	125-7220	6	Bolt
35	125-6972	1	Cover-Filler

Ref.	Part Number	Qty.	Description
36	127-4719	1	Cylinder Head Cover ASM
37	127-2988	1	Plate
38	125-7012	1	Baffle
39	125-6959	1	Diaphragm
40	125-6960	1	Plate
41	125-6961	1	Plate-Breather
42	125-6962	1	Spring-Diaphragm
44	127-3856	1	Gasket-Valve Cover
45	127-3026	1	Joint
46	127-3029	1	Sensor-Pressure
47	127-3032	2	O Ring-Sensor, Pressure
48	127-3040	1	Hose ASM
50	127-3041	2	Clip-Hose
51	125-6913	1	Plug
52	125-7186	4	Screw
53	125-7186	6	Screw
54	127-3184	2	Bolt
55	125-6974	3	Knob
56	93-0418	3	O-Ring
57	125-7197	1	O-Ring
58	125-7111	1	Lifter
59	100-6928	2	Bolt
60	127-2991	3	Plug-Glow
61	127-3768	1	Connector-Plug, Glow
62	127-2979	3	Guide
63	127-2997	3	Guide-Valve
64	131-2704	1	Harness-Wire

Suction Manifold Assembly

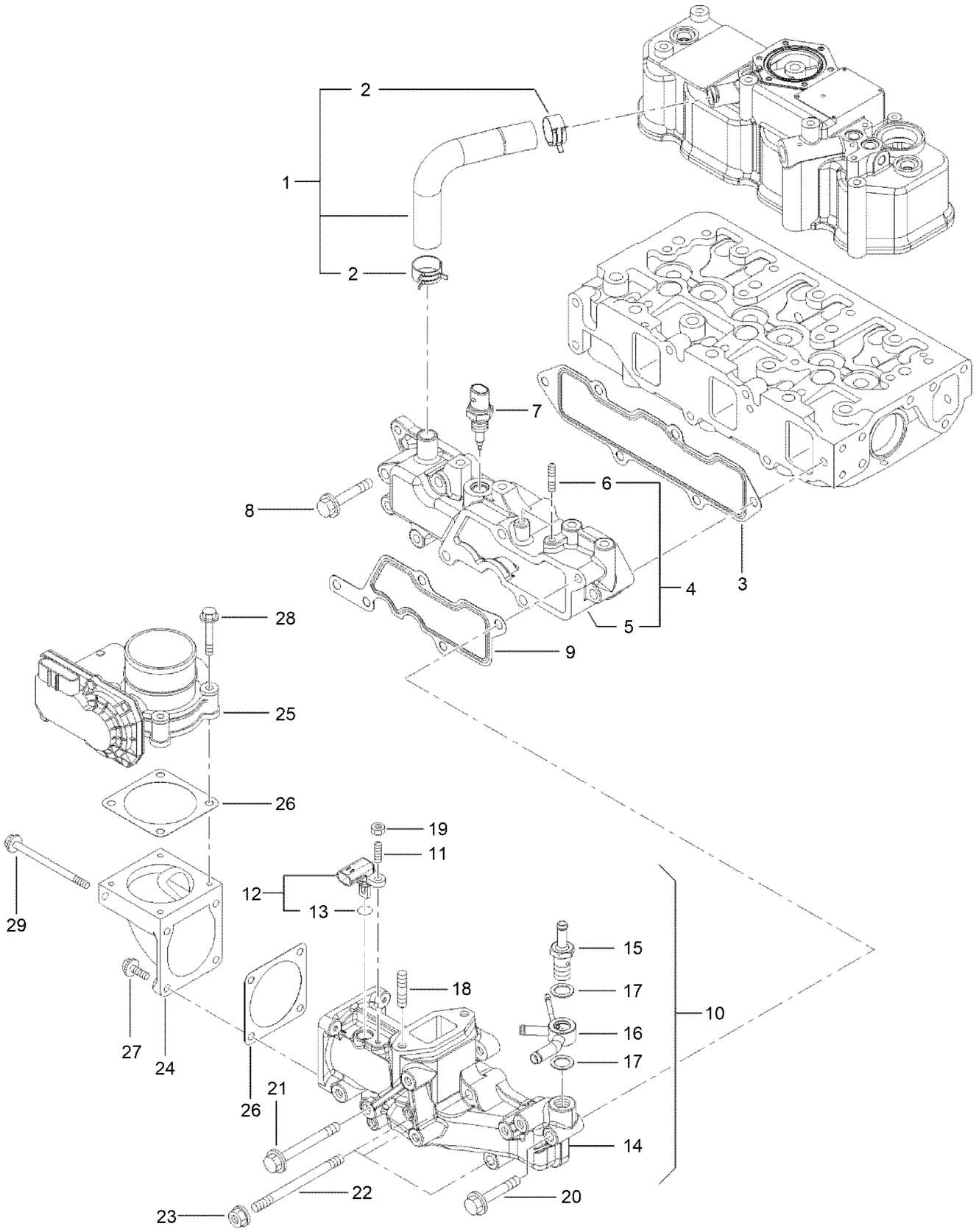

Suction Manifold Assembly (continued)

Ref.	Part Number	Qty.	Description
1	127-4704	1	Pipe
2	125-7040	2	Clip-Hose
3	127-3857	1	Gasket-Manifold, Intake
4	127-4722	1	Intake Manifold ASM
5	127-4721	1	Manifold-Intake
6	127-3180	2	Stud
7	137-5167	1	Sensor-Temperature, Air
8	125-7220	3	Bolt
9	127-3034	1	Gasket-Collector
10	127-4725	1	Intake Collector ASM
11	127-4701	1	Stud
12	127-3030	1	Sensor-Temp, Air
13	127-3033	1	O-Ring
14	127-4724	1	Collector-Intake
15	127-3080	1	Joint-Hose
16	127-3081	1	Joint-Hose
17	127-3166	2	Washer-Seal
18	127-3181	2	Stud
19	127-4775	1	Nut
20	125-7220	1	Bolt
21	127-3178	1	Bolt
22	127-3182	3	Stud
23	125-7229	3	Nut
24	127-3035	1	Bend-Inlet
25	127-3036	1	Body-Throttle
26	127-3037	2	Gasket-Throttle
27	125-7209	2	Bolt
28	125-7211	4	Bolt
29	127-3177	2	Bolt

Exhaust Manifold Assembly

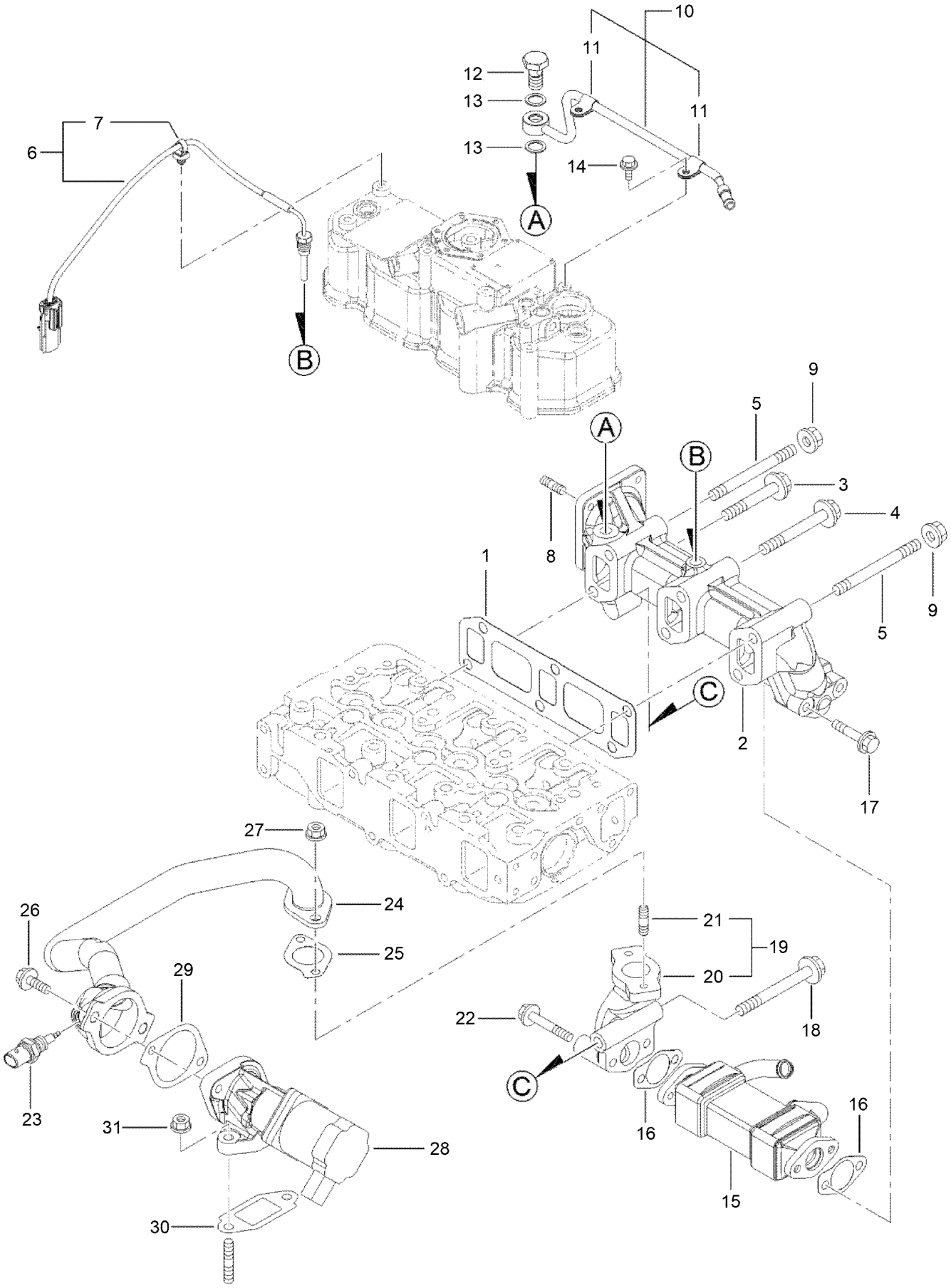

Exhaust Manifold Assembly (continued)

Ref.	Part Number	Qty.	Description
1	127-3775	1	Gasket-Manifold, Exhaust
2	127-4727	1	Manifold-Exhaust
3	139-6015	1	Bolt-Flange
4	135-4014	3	Bolt
5	127-4756	2	Stud
6	127-4729	1	Sensor-Temp, Exhaust
7	127-3087	1	Band-Clip
8	125-6906	4	Stud
9	125-7230	2	Nut
10	127-3038	1	Exhaust Pipe ASM
11	127-3173	2	Clamp
12	127-3039	1	Bolt-Joint, Pipe
13	127-3174	2	Gasket
14	125-7206	2	Bolt
15	127-3042	1	Cooler-E G R
16	127-3043	2	Gasket-Cooler, E G R
17	135-4015	2	Bolt
18	135-4016	1	Bolt
19	127-3048	1	E G R Pipe ASM
20	127-3049	1	Pipe-Out, E G R
21	125-7043	2	Stud
22	125-7220	2	Bolt
23	137-5168	1	Sensor-Gas Temp, E G R
24	127-3780	1	E G R Pipe ASM
25	127-3016	1	Gasket
26	125-7215	2	Bolt
27	125-7229	2	Nut
28	127-3781	1	Valve-E G R
29	127-3050	1	Gasket-Intake Valve, E G R
30	127-3051	1	Gasket-Out Valve, E G R
31	125-7229	2	Nut

Diesel Particulate Filter Assembly

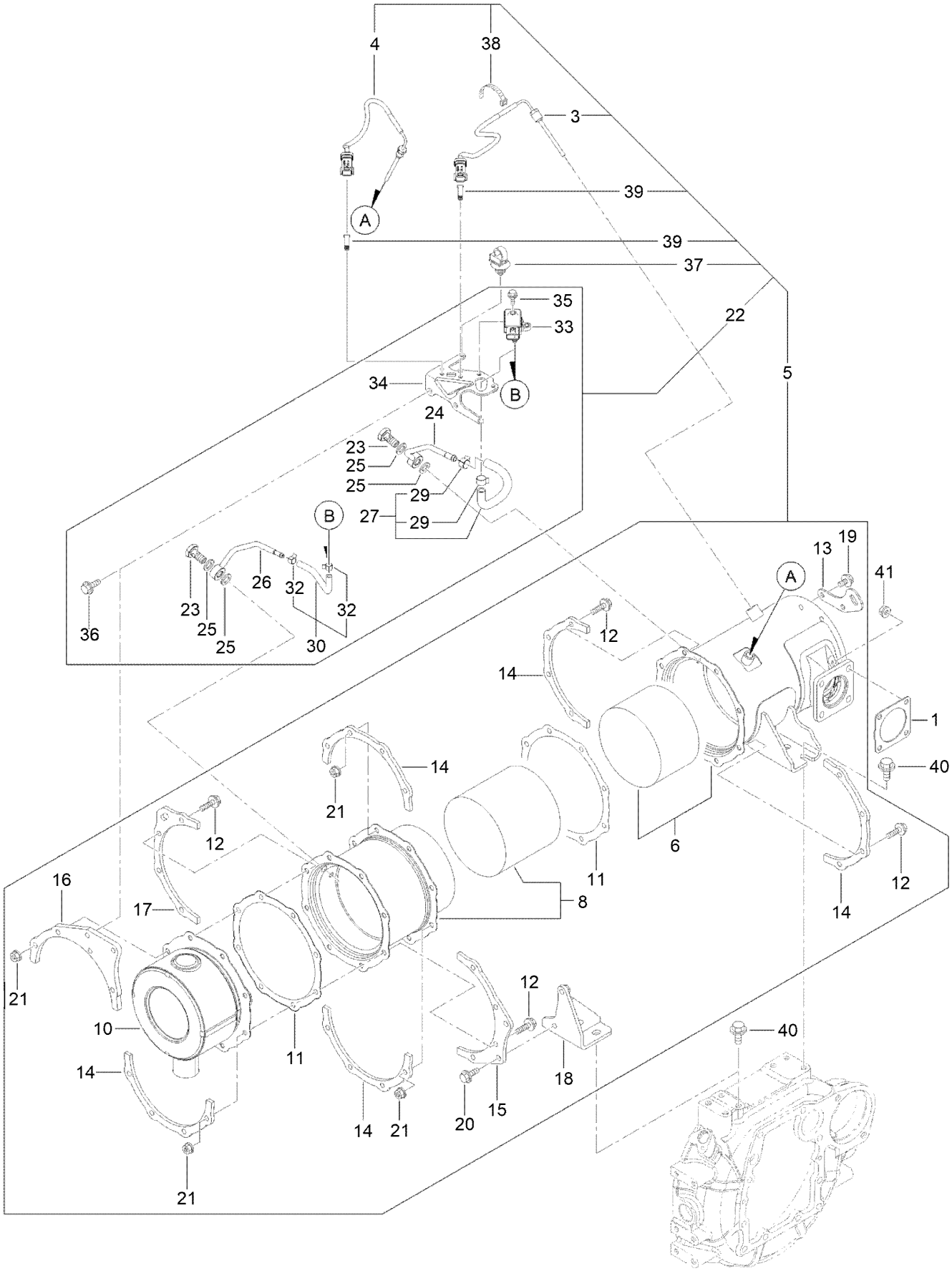

Diesel Particulate Filter Assembly (continued)

Ref.	Part Number	Qty.	Description
1	127-3019	1	Gasket
3	127-4764	1	Sensor-Temp, Exhaust
4	127-4765	1	Sensor-Temp, Exhaust
5	127-4730	1	D P F ASM
6	127-4731	1	Case-Doc
8	127-4733	1	Case-Soot Filter
10	127-3786	1	Silencer-D P F
11	127-3859	2	Gasket-D P F
12	127-3055	16	Bolt
13	127-3788	1	Lifter-D P F
14	127-3789	5	Stiffener-D P F, A
15	127-3790	1	Stiffener-D P F, B
16	127-3791	1	Stiffener-D P F, C
17	127-3792	1	Stiffener-D P F, C
18	127-4737	1	Stay-Dpf
19	125-7213	2	Bolt
20	125-7594	2	Bolt
21	125-7229	16	Nut
22	127-4777	1	Sensor Pressure Unit
23	127-3039	2	Bolt-Joint, Pipe
24	127-3795	1	Pipe-Sensor
25	127-3056	4	Gasket-Sensor
26	127-3796	1	Pipe-Sensor
27	127-4746	1	Exhaust Hose ASM
29	127-3057	2	Clip-Hose
30	127-3059	1	Exhaust Pressure Hose ASM
32	127-3058	2	Clip-Hose
33	127-3060	1	Sensor-Pressure
34	127-3061	1	Bracket-Sensor, Pressure
35	125-7208	2	Bolt
36	125-7595	2	Bolt
37	127-3087	1	Band-Clip
38	127-3124	1	Band
39	127-3088	2	Clip-Connnector
40	127-3179	4	Bolt
41	125-7229	4	Nut

Camshaft and Driving Gear Assembly

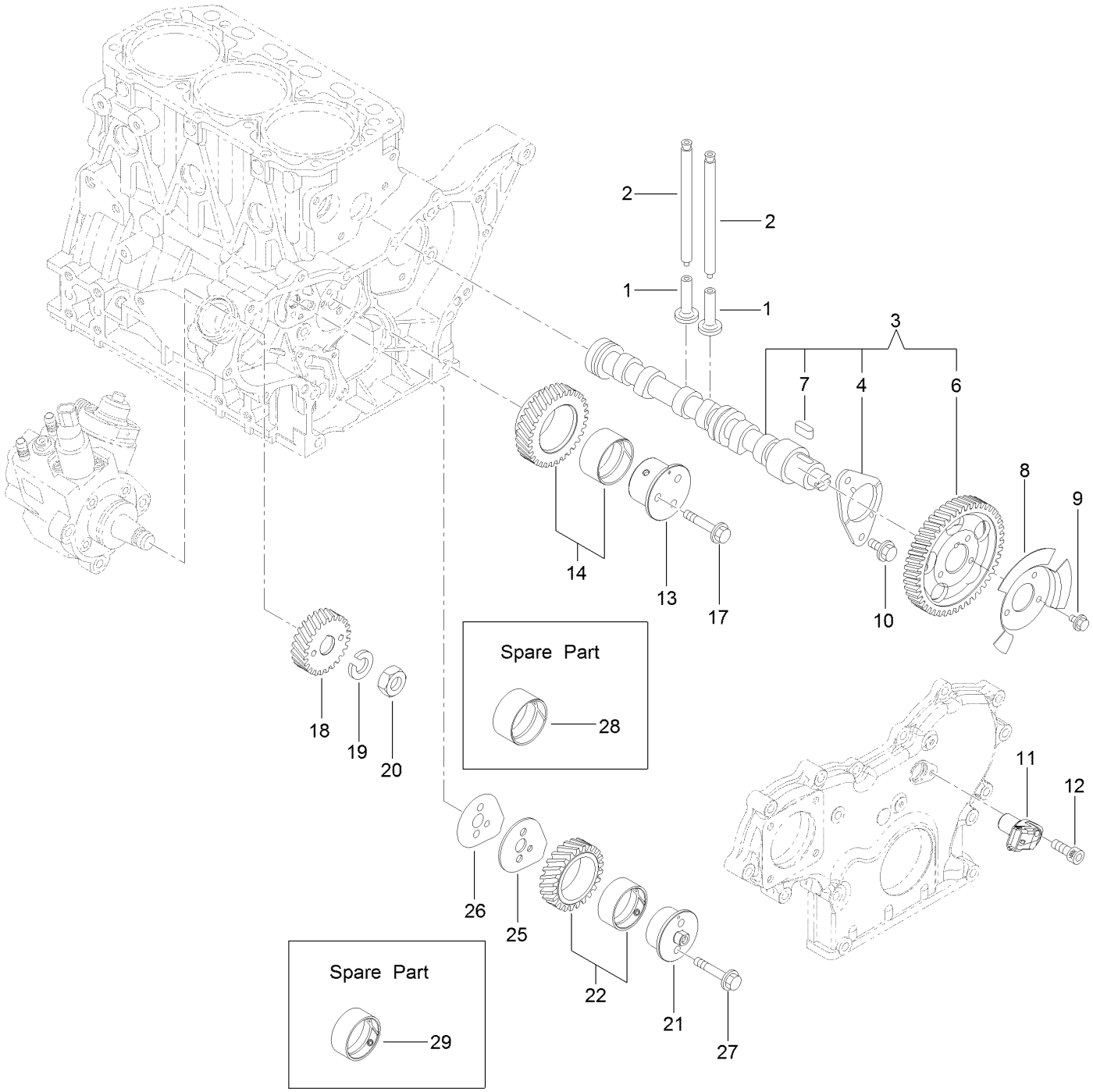

Camshaft and Driving Gear Assembly (continued)

Ref.	Part Number	Qty.	Description
1	125-7016	6	Tappet
2	125-7017	6	Rod-Push
3	127-3797	1	Camshaft ASM
4	125-7008	1	Metal-Thrust
6	127-3052	1	Gear-Camshaft
7	125-7185	1	Key
8	127-3053	1	Pulser-Camshaft
9	125-7205	3	Bolt
10	125-7213	2	Bolt
11	127-3054	1	Sensor-Rev, Gear
12	127-3184	1	Bolt
13	127-3063	1	Shaft-Idle, Gear A
14	127-3066	1	Idle Gear A ASM
17	125-7219	3	Bolt
18	127-3070	1	Gear-Pump, Supply
19	127-3167	1	Washer-Spring
20	127-3185	1	Nut-Lock
21	127-3064	1	Shaft-Idle, Gear B
22	127-3067	1	Idle Gear B ASM
25	127-3068	1	Plate-Idle, Shaft
26	127-3069	1	Gasket-Idle, Shaft B
27	125-7218	2	Bolt
28	125-6927	1	Bushing
29	127-3065	1	Bushing

Crankshaft and Piston Assembly

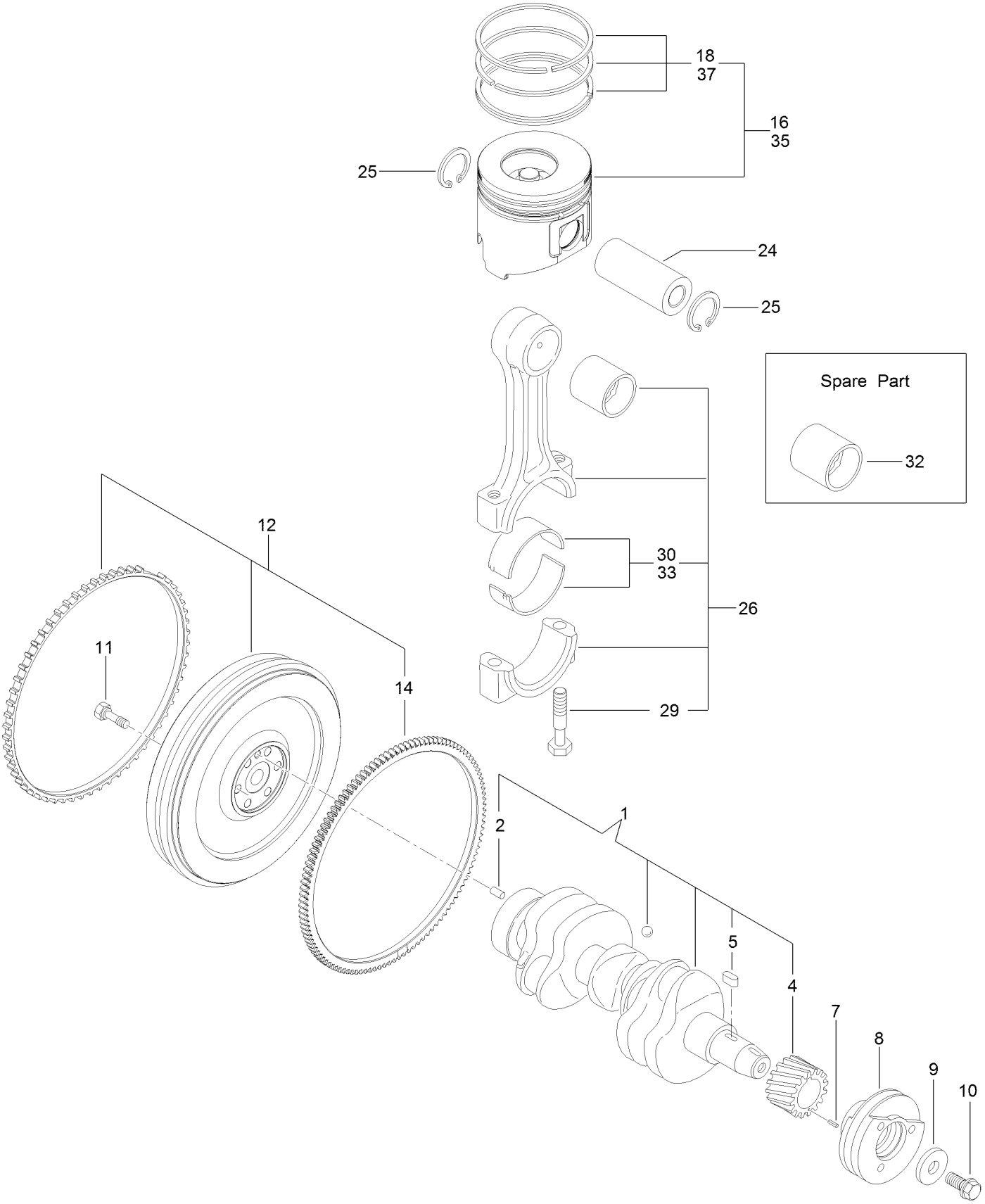

Crankshaft and Piston Assembly (continued)

Ref.	Part Number	Qty.	Description
1	127-3800	1	Crankshaft ASM
2	125-6995	1	Pin
4	125-6937	1	Gear
5	125-7185	1	Key
7	125-7182	1	Pin-Spring
8	127-3801	1	Pulley-V
9	125-7109	1	Washer
10	125-6956	1	Bolt
11	125-6951	6	Bolt
12	127-3802	1	Flywheel ASM
14	125-6943	1	Gear

Ref.	Part Number	Qty.	Description
16	127-4766	3	Piston ASM
18	127-4751	3	Piston Ring ASM
24	125-7030	3	Pin
25	125-7180	6	Ring
26	125-7242	3	Connecting Rod ASM
29	125-6955	6	Bolt
30	125-7018	3	Pin-Crank
32	125-6997	3	Pin-Piston
33	125-7019	3	Pin-Crank (.25)
35	127-4767	3	Piston ASM (0.25 O S)
37	127-4752	3	Ring Set (0.25 O S)

Lubrication and Oil System Assembly

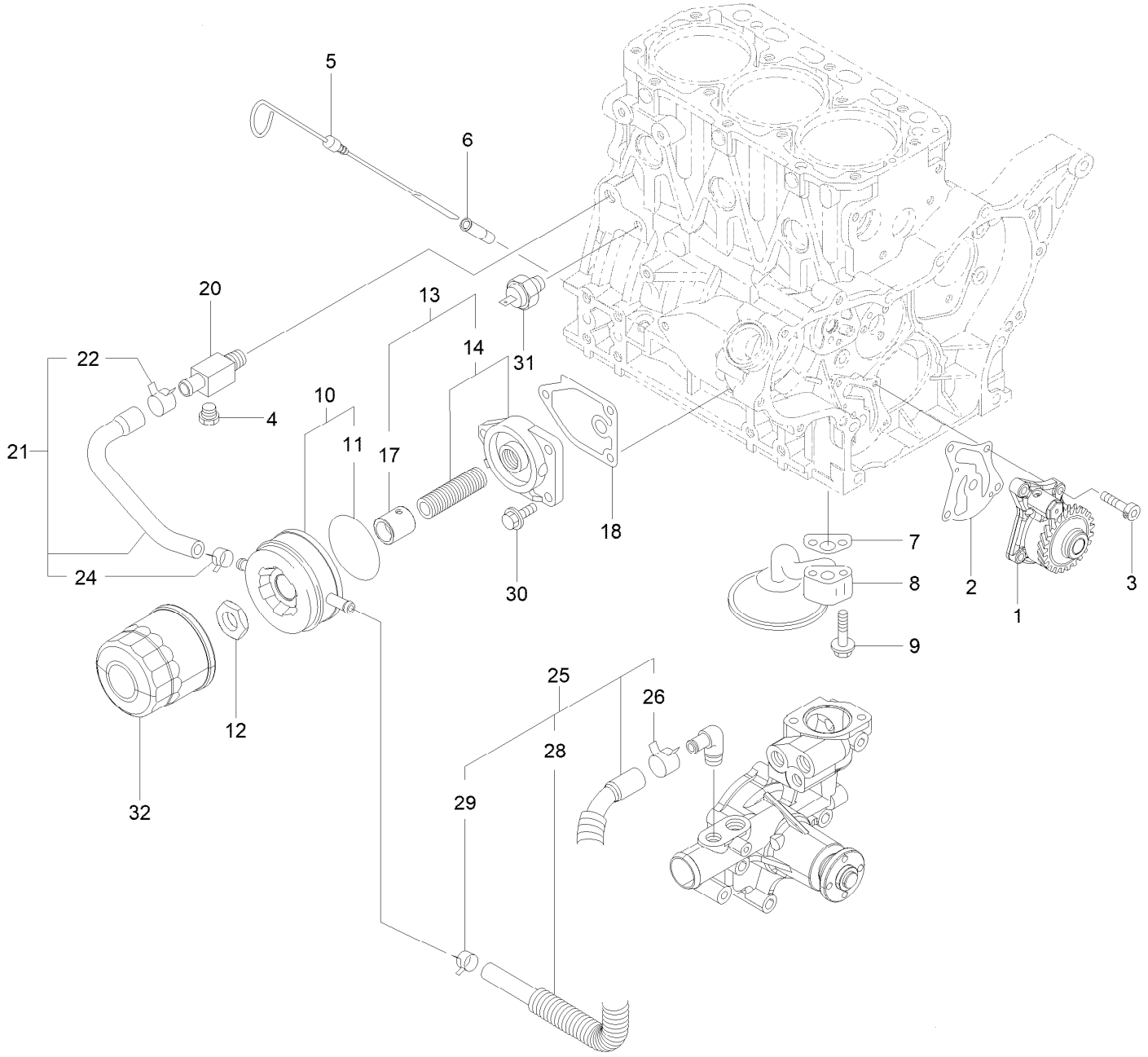

Lubrication and Oil System Assembly (continued)

Ref.	Part Number	Qty.	Description
1	127-4753	1	Oil Pump ASM
2	127-3004	1	Gasket
3	125-7232	4	Bolt
4	125-7171	1	Plug-Drain
5	125-6987	1	Dipstick
6	125-6954	1	Guide-Dipstick
7	125-7022	1	Gasket
8	127-3803	1	Pipe ASM
9	125-7217	2	Bolt
10	135-4018	1	Oil Cooler ASM
11	135-4019	1	Packing-Oil Cooler
12	135-4020	1	Nut
13	135-4021	1	Lo Filter Bracket ASM
14	125-6989	1	Bracket ASM

Ref.	Part Number	Qty.	Description
17	135-4022	1	Collar-Cooler, Oil
18	125-7024	1	Gasket
20	125-6990	1	Joint
21	125-7078	1	Pipe ASM
22	125-7162	1	Clip
24	125-7191	1	Clamp-Hose
25	127-3804	1	Pipe ASM
26	125-7162	1	Clip
28	127-3805	1	Tube
29	125-7191	1	Clamp-Hose
30	125-7595	3	Bolt
31	125-6918	1	Switch-Oil
32	125-7025	1	Filter-Engine, Oil

Cooling System Assembly

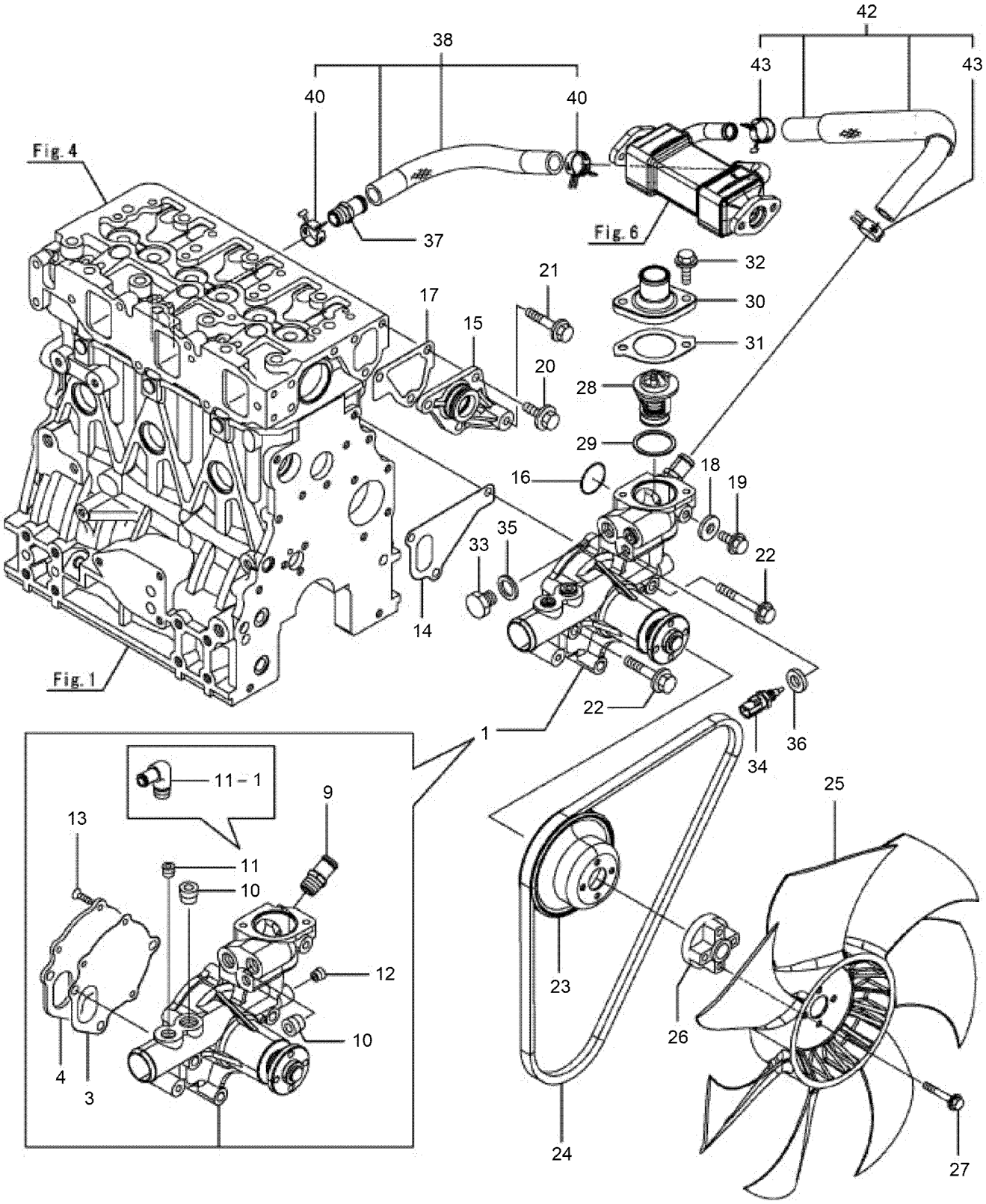

Cooling System Assembly (continued)

Ref.	Part Number	Qty.	Description
1	131-2714	1	Water Pump ASM
3	125-6998	1	Gasket
4	125-6999	1	Plate
9	127-3017	1	Joint
10	125-7123	2	Plug
11	125-7001	1	Elbow
12	125-7195	1	Plug
13	125-7234	3	Screw
14	125-7047	1	Gasket
15	125-6986	1	Joint
16	125-7048	1	O-Ring
17	125-6978	1	Gasket
18	125-7192	1	Gasket
19	93-0362	1	Bolt
20	100-6928	3	Bolt
21	125-7219	1	Bolt
22	125-7222	3	Bolt
23	125-7039	1	V-Pulley
24	127-2998	1	V-Belt
25	127-4713	1	Fan
26	127-4768	1	Spacer
27	125-7211	4	Bolt
28	125-7029	1	Thermostat
29	125-7026	1	Gasket
30	125-7034	1	Cover
31	125-7110	1	Gasket
32	125-7594	2	Bolt
33	125-6953	1	Plug
34	125-7124	1	Sensor-Thermostat, CW
35	125-6979	1	Gasket
36	125-7176	1	Washer-Seal
37	127-3017	1	Joint
38	127-3072	1	Water In Pipe ASM
40	127-3020	2	Clip-Hose
42	127-3811	1	CW Pipe ASM
43	127-3020	2	Clip-Hose

Fuel System Assembly

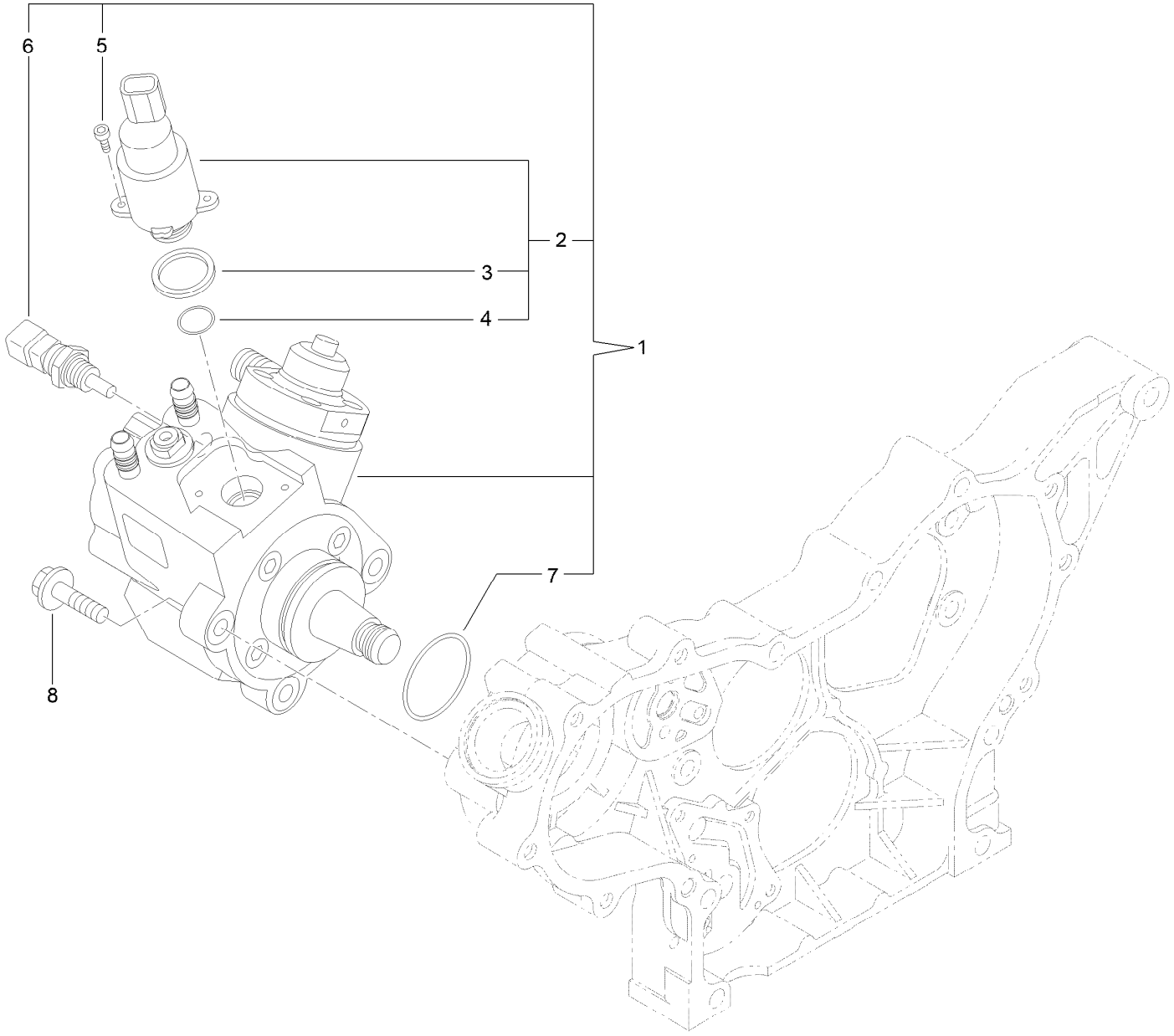

Fuel System Assembly (continued)

Ref.	Part Number	Qty.	Description
1	127-3073	1	Fuel Pump ASM
2	131-2103	1	Valve ASM
3	131-2105	3	Ring-Sealing
4	131-2106	1	O-Ring
5	131-2107	2	Bolt
6	131-2108	1	Sensor-Temperature
7	127-3074	1	O-Ring
8	125-7216	3	Bolt

Fuel Injection Valve Assembly

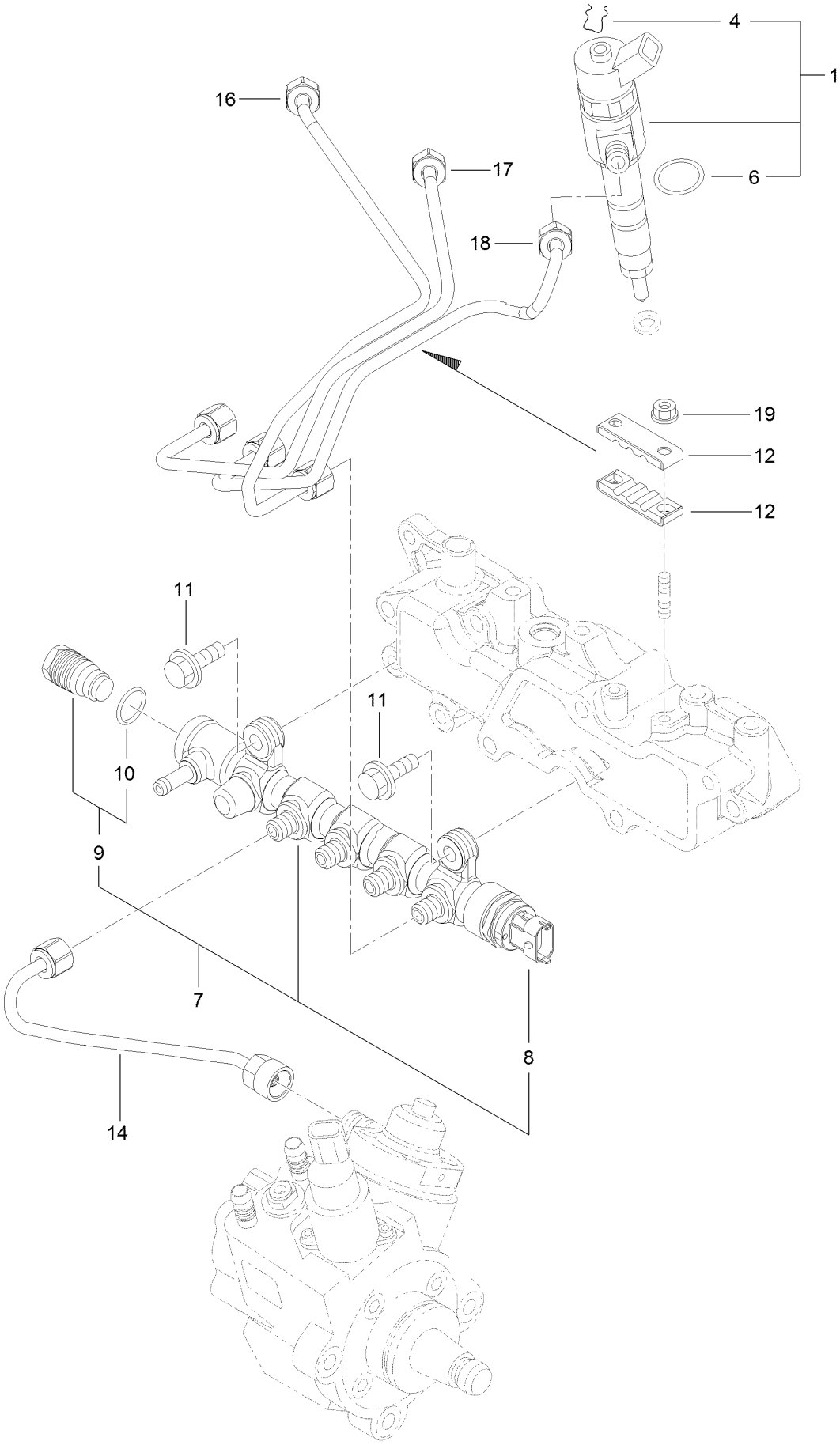

Fuel Injection Valve Assembly (continued)

Ref.	Part Number	Qty.	Description
1	127-4754	3	Injector ASM
4	130-7430	3	Ring-Retaining
6	137-5173	3	O-Ring
7	127-3812	1	Rail ASM
8	131-2709	1	Sensor-Pressure, Rail
9	131-2710	1	Valve ASM
10	130-7433	1	O-Ring

Ref.	Part Number	Qty.	Description
11	125-7215	2	Bolt
12	127-3813	2	Retainer
14	127-3082	1	Rail In Pipe ASM
16	127-3814	1	Injection Pipe ASM
17	127-3083	1	Injection Pipe ASM
18	127-3084	1	Injection Pipe ASM
19	125-7231	2	Nut

Fuel Line Assembly

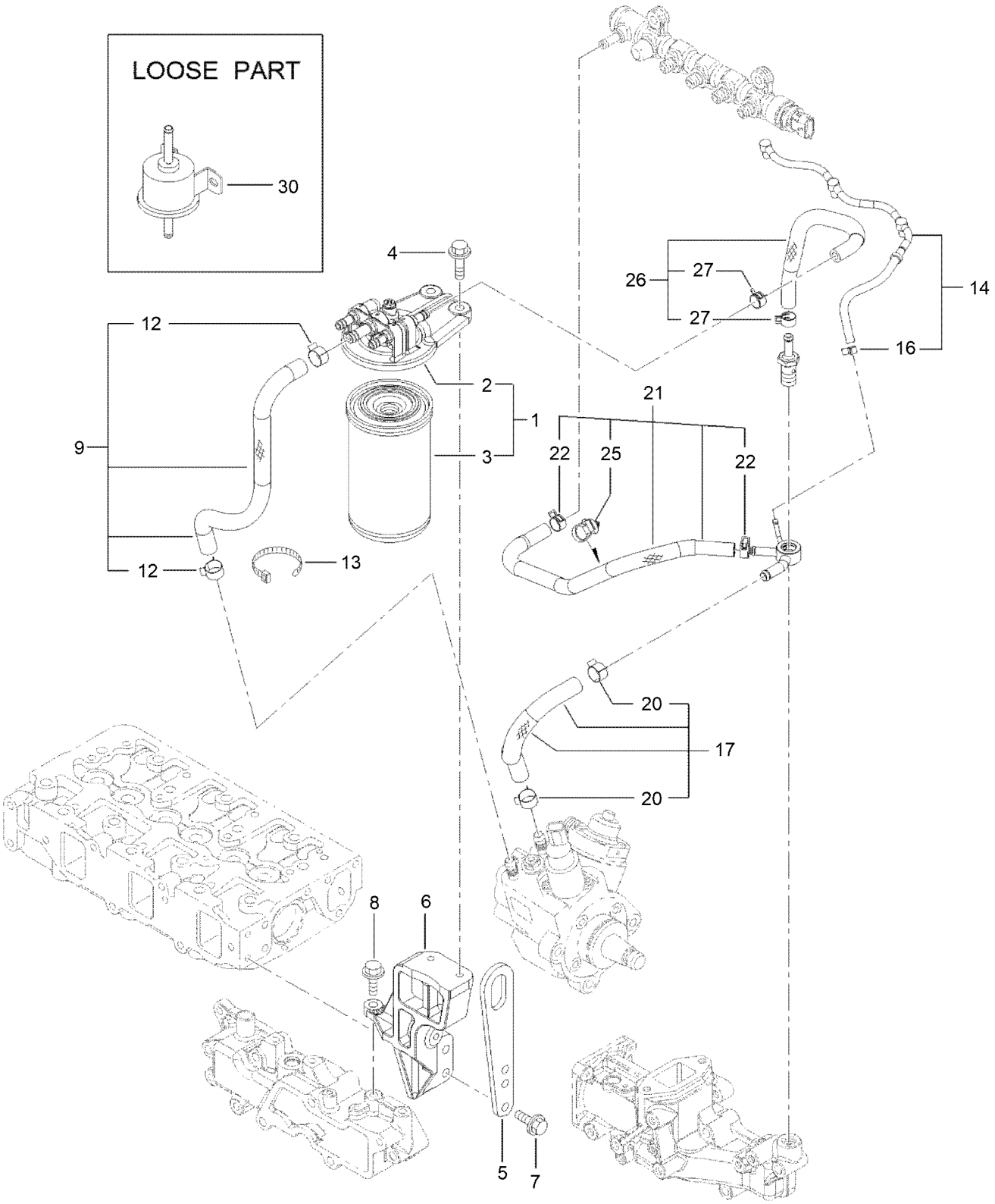

Fuel Line Assembly (continued)

Ref.	Part Number	Qty.	Description
1	139-6016	1	Fuel/Oil Filter ASM
2	127-3076	1	Fuel/Oil Filter Bracket ASM
3	139-6017	1	Filter-Fuel
4	125-7216	2	Bolt
5	125-7111	1	Lifter
6	127-3815	1	Filter Bracket ASM
7	125-7215	2	Bolt
8	125-7215	1	Bolt
9	127-3077	1	Fuel Pipe ASM
12	125-7191	2	Clamp-Hose
13	127-2981	1	Band
14	131-2729	1	Joint-Hose, 4 Way
16	127-3172	1	Clamp-Hose
17	127-3078	1	Fuel Pipe ASM
20	125-7191	2	Clamp-Hose
21	127-3817	1	Fuel Pipe ASM
22	127-2950	2	Clip-Hose
25	127-3087	1	Band-Clip
26	127-3079	1	Fuel Pipe ASM
27	127-2950	2	Clip-Hose
30	121-5613	1	Pump-Fuel, Electric

Starting Motor Assembly

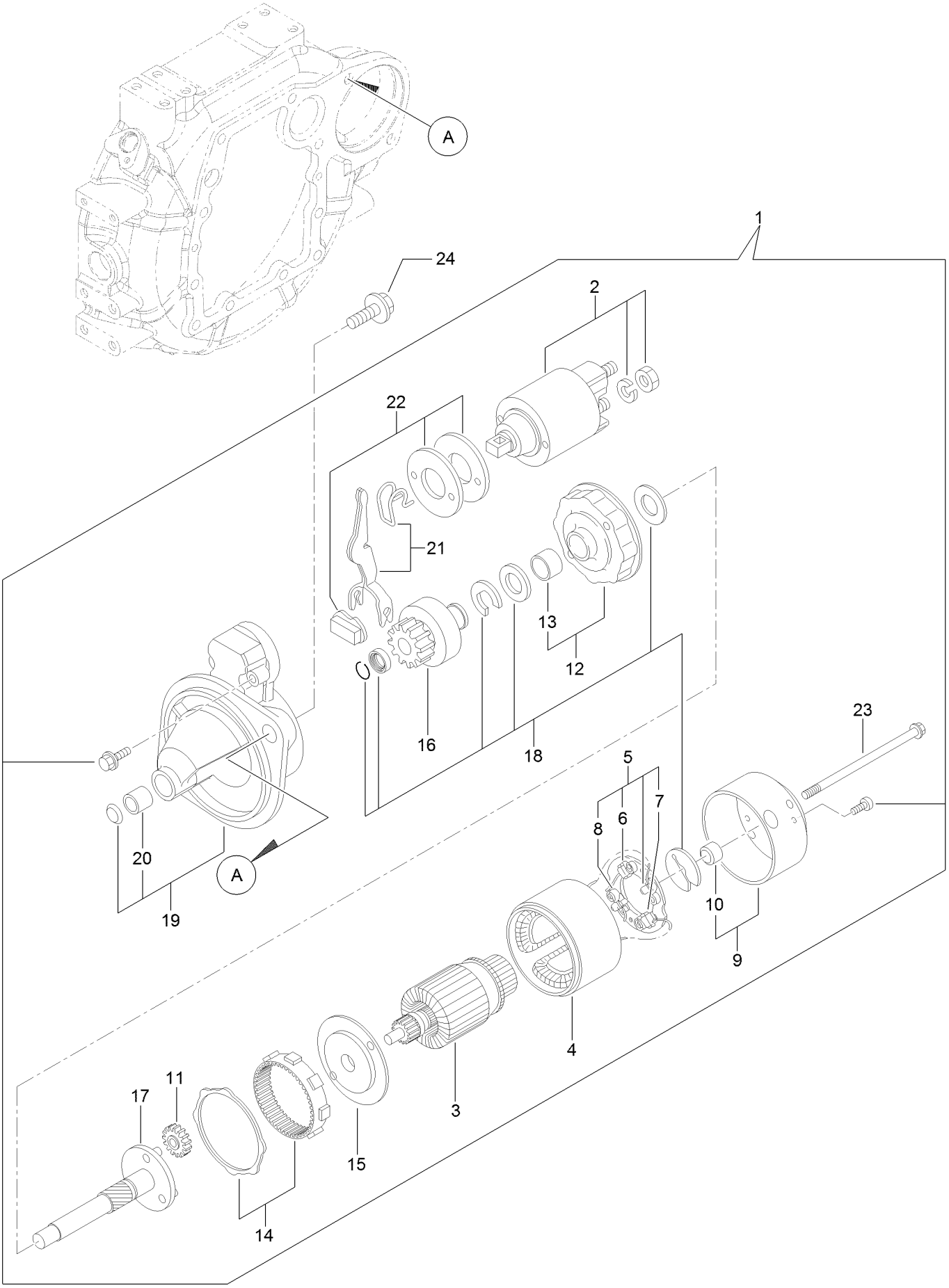

Starting Motor Assembly (continued)

Ref.	Part Number	Qty.	Description
1	127-3818	1	Starter ASM
2	127-3819	1	Switch ASM
3	127-3820	1	Armature ASM
4	127-3821	1	Yoke ASM
5	127-3822	1	Brush Holder ASM
6	127-3823	2	Brush
7	127-3824	1	Brush Set
8	127-3825	4	Spring
9	127-3826	1	Cover ASM
10	127-3827	1	Metal
11	127-3828	3	Gear
12	127-3829	1	Bracket
13	127-3830	1	Bracket
14	127-3831	1	Gear
15	127-3832	1	Bracket
16	127-3833	1	Pinion ASM
17	127-3834	1	Shaft
18	127-3835	1	Washer Set
19	127-3836	1	Case ASM
20	127-3837	1	Metal-Starter
21	127-3838	1	Lever Set
22	127-3839	1	Dust Cover ASM
23	127-3840	2	Bolt-Through
24	125-7225	2	Bolt

Generator Assembly

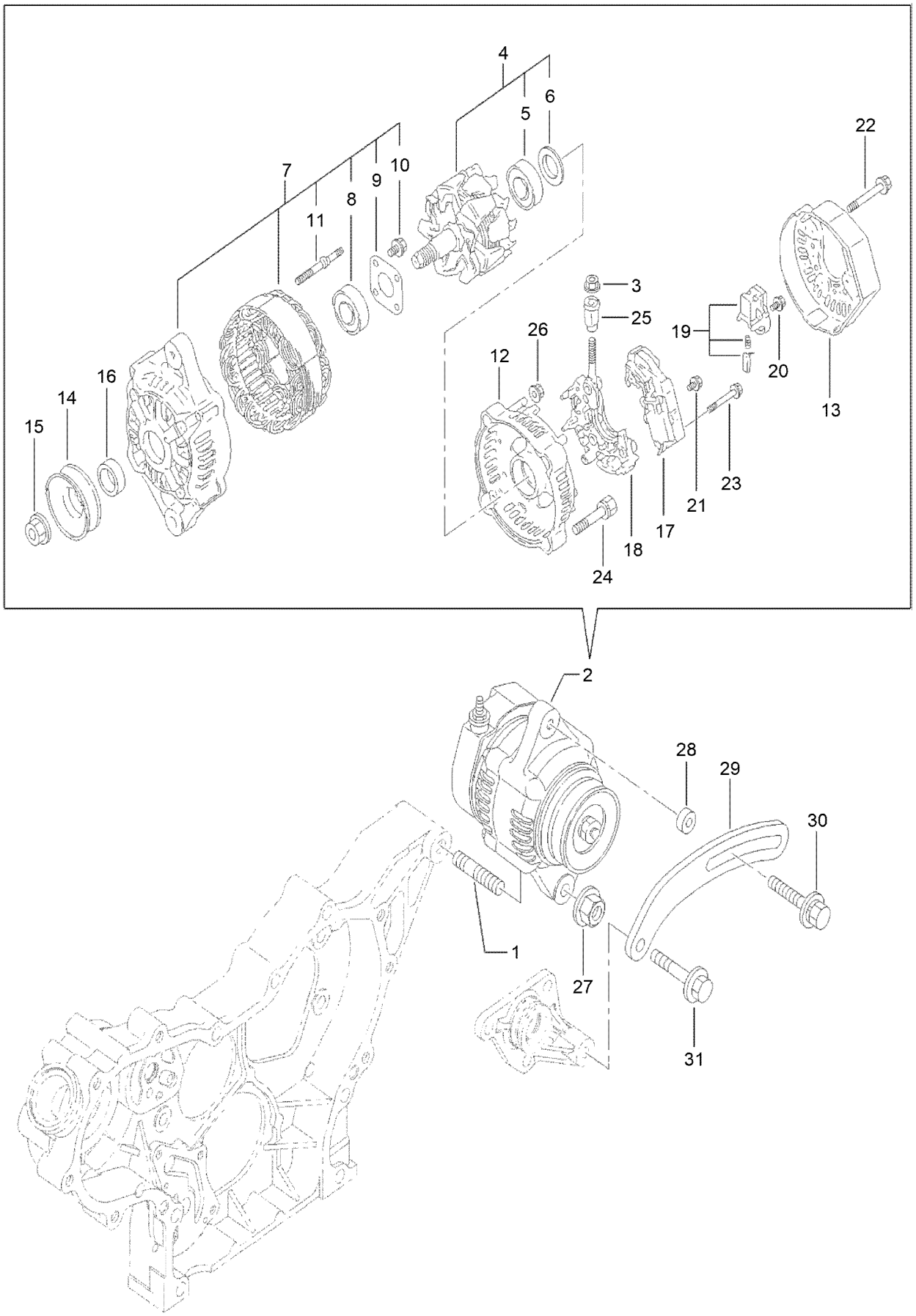

Generator Assembly (continued)

Ref.	Part Number	Qty.	Description
1	127-3011	1	Stud
2	139-6018	1	Generator
3	127-3190	1	Nut
4	127-3843	1	Rotor ASM
5	127-2983	1	Bearing-Ball
6	127-2962	1	Cover
7	135-4025	1	Frame ASM
8	127-2958	1	Bearing-Ball
9	127-2959	1	Plate-Retainer
10	127-2960	4	Screw
11	127-2961	2	Stud
12	127-3845	1	Frame
13	127-3846	1	Cover
14	127-2954	1	Pulley
15	127-2955	1	Nut
16	127-2957	1	Collar
17	135-4026	1	Regulator ASM
18	127-3848	1	Holder
19	127-2993	1	Holder
20	127-2965	6	Screw
21	127-2966	1	Screw
22	127-2967	3	Bolt
23	127-2968	2	Screw
24	127-2969	2	Bolt
25	127-2970	1	Bushing-Insulation
26	127-2971	2	Nut
27	125-7230	1	Nut
28	125-6947	1	Spacer
29	127-2977	1	Adjuster
30	125-7134	1	Bolt
31	125-7219	1	Bolt

Electrical Assembly

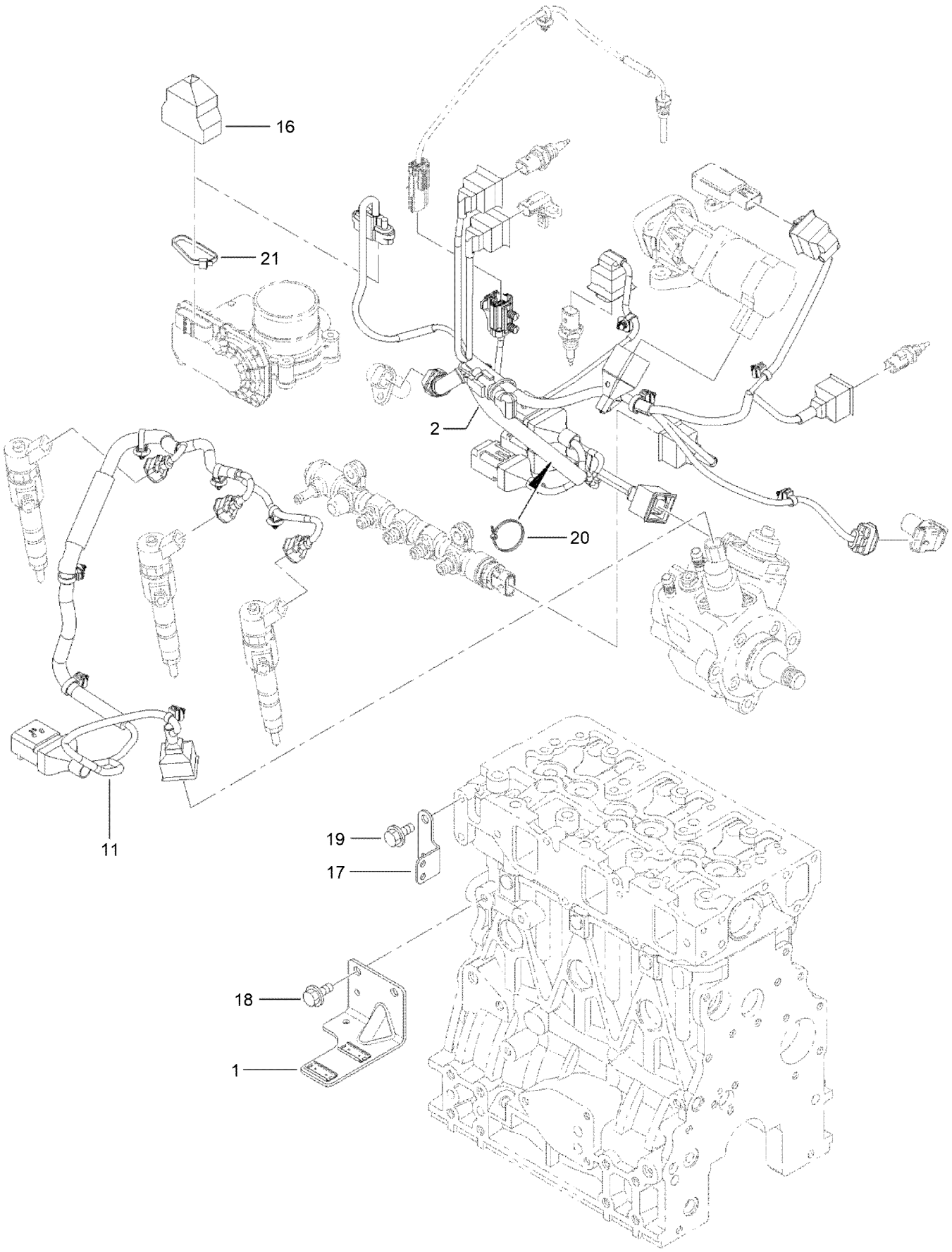

Electrical Assembly (continued)

Ref.	Part Number	Qty.	Description
1	130-7436	1	Bracket-Connector
2	135-4029	1	Harness
11	130-7438	1	Harness
16	131-2713	1	Boot-Cap
17	127-3090	1	Bracket-Harness
18	125-7213	2	Bolt
19	93-0362	2	Bolt
20	127-3187	1	Band
21	127-3188	1	Band

Gasket Set

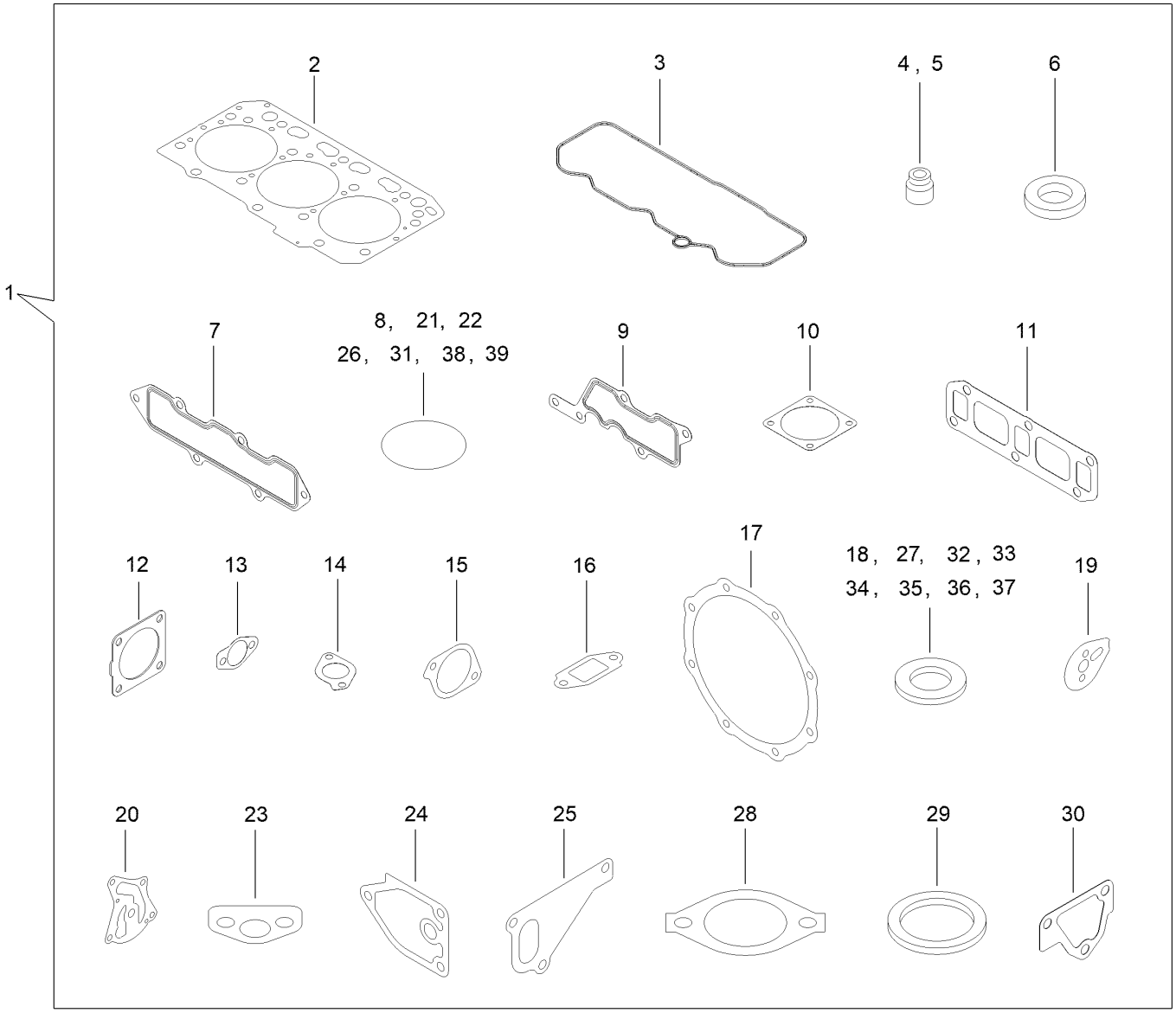
1
2
3
4 , 5
6
7
8, 21, 22
26, 31, 38, 39
9
10
11
12
13
14
15
16
17
18, 27, 32, 33
34, 35, 36, 37
19
20
23
24
25
28
29
30

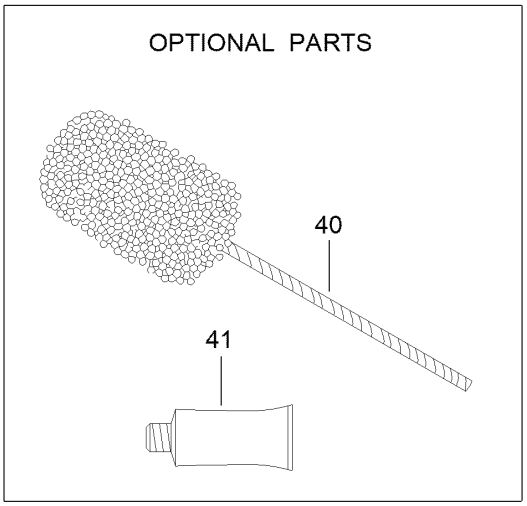
OPTIONAL PARTS
40
41

Gasket Set (continued)

Ref.	Part Number	Qty.	Description
1	127-4776	1	Gasket Kit
2	127-4716	1	Head Gasket ASM
3	127-3856	1	Gasket-Valve Cover
4	127-2986	3	Seal-Stem, Valve
5	127-3027	3	Seal-Stem, Valve
6	127-3021	3	Gasket-Injector
7	127-3857	1	Gasket-Manifold, Intake
8	127-3033	1	O-Ring
9	127-3034	1	Gasket-Collector
10	127-3037	2	Gasket-Throttle
11	127-3775	1	Gasket-Manifold, Exhaust
12	127-3019	1	Gasket
13	127-3043	2	Gasket-Cooler, E G R
14	127-3016	1	Gasket
15	127-3050	1	Gasket-Intake Valve, E G R
16	127-3051	1	Gasket-Out Valve, E G R
17	127-3859	2	Gasket-D P F
18	127-3056	4	Gasket-Sensor
19	127-3069	1	Gasket-Idle, Shaft B
20	127-3004	1	Gasket
21	125-6909	2	O-Ring
22	127-2973	1	O-Ring
23	125-7022	1	Gasket
24	125-7024	1	Gasket
25	125-7047	1	Gasket
26	125-7048	1	O-Ring
27	125-6979	1	Gasket
28	125-7110	1	Gasket
29	125-7026	1	Gasket
30	125-6978	1	Gasket
31	127-3074	1	O-Ring
32	125-7174	1	Washer-Seal
33	125-7176	1	Washer-Seal
34	127-3166	2	Washer-Seal
35	125-7177	1	Washer-Seal
36	125-7192	1	Gasket
37	127-3174	2	Gasket
38	93-0418	3	O-Ring
39	125-7197	2	O-Ring
40	127-3000	1	Hone
41	125-7248	1	Gasket-Liquid

Attachments and Accessories

For 22370 — TX 1300 Compact Tool Carrier

Product Name	Model/Part
Premium Engine Oil 10w30 (55 Gallon Drum)	121-6392
Premium Engine Oil 10w30 (5 Gallon Pail)	121-6393
Premium Engine Oil 15w40 (55 Gallon Drum)	121-6394
Premium Engine Oil 15w40 (5 Gallon Pail)	121-6395
PX Hydraulic Fluid (5 Gal)	133-8086
PX Hydraulic Fluid (55 Gal)	133-8087
PX Hydraulic Fluid-4 Pack (Gallon)	138-9460
Kit-Light	140-4508
Kit-Hose, Grapple Bucket	145-4454
Decal Kit - HERC	145-6948
Kit-TX1300, 500HR	164-1478
Kit-TX1300, 1000HR	164-1479
Standard Bucket	22340
High Volume Bucket	22342
Standard Bucket, Dingo TX 1300	22345
Low Profile Bucket, Dingo TX 1300	22346
48in Hydraulic Blade	22414
Bore Drive Head	22420
Rod and Reamer	22421
Stump Grinder	22429
Tree Forks	22438
Cement Bowl	22442
40in Tiller	22445
Crumber Kit	22464
Trench Filler	22472
High-Torque Trencher Head	22473
High-Speed Trencher Head	22474
Crumber Kit	22477
4-in-1 Bucket	22478
Narrow Bucket	22520
Grapple Rake	22577
Snow Thrower	22585
Adjustable Forks	22586
Grapple Bucket	22590
Multi-Purpose Tool	22672
Floor Scraper	22674
Auger Head	22805
Universal Swivel Auger Head	22806
18in Auger Bit	22814
24in Auger Bit	22815
30in Auger Bit	22816
12in Auger Bit Extension	22818
24in Auger Bit Extension	22819
6in Full-Flight Auger Bit	22820
9in Full-Flight Auger Bit	22821
12in Full-Flight Auger Bit	22822

Attachments and Accessories (continued)

15in Full-Flight Auger Bit 22823
Vibratory Plow 22911
Soil Cultivator 23102
Hydraulic Breaker 23136
Log Grapple 23137
Log Grapple, Powered (T2010) 23138
Rake - Log Grapple 23141
Clamshells - Log Grapple 23148
Leveler 23165
30in Standard Bucket 23174
30in Pallet Fork 23175
30in Grapple 23176
Power Box Rake 23702
New Red Paint - Gallon 361-11
Dark Metallic Gray Aerosol Paint 361-12
Semi-Gloss Black Spray Paint 361-9
Air Dry Red Paint - Qt 5340

Notes:

Notes:

TORO®

Count on it.