Form No. 3484-142 Rev A

TORO®

Count on it.

Parts Catalog

11-Blade EdgeSeries™ DPA Cutting Unit

Greensmaster® 3300, 3400, or 3360 with GeoLink® Mow Series Traction Unit

Model No. 04658—Serial No. 420000000 and Up

Register at www.Toro.com.
Original Instructions (EN)

CE

3484-142 A

Ordering Replacement Parts

To order replacement parts, please supply the part number, the quantity, and the description of each part desired.

Understanding Reference Numbers

Each identified part in an illustration has a reference number. The reference number for a part also appears in the parts list, along with other information about the part.

This catalog uses two special reference number formats, one to indicate parts in a service assembly and another to indicate the quantity of a given part in an illustration.

Service Assembly Reference Numbers

Parts in service assemblies have reference numbers in the form a:b. The a represents the reference number of the entire service assembly and the b represents a sequential number unique to each part within the service assembly.

For example, a wheel assembly might be identified by reference number 6, the tire by 6:1, the valve by 6:2, and the wheel by 6:3. When you order the assembly identified by reference number 6, you receive all parts identified by reference numbers 6:1,6:2, and 6:3. However, you may also order any part individually. Reference numbers of this type appear in illustration and in parts lists.

Reference Numbers Indicating Quantity

In an illustration, if a reference number indicates more than one part, the reference number has the form nX y. The n represents the quantity of the part, the X is the multiplication symbol, and the y represents the reference number.

For example, in an illustration, the reference number 2X 37 means that two of the parts identified by reference number 37 are indicated.

Contents

Frame Assembly 4
Reel Assembly 5
Rear Roller Assembly 6
Rear Full Roller Assembly No. 140-5560 7
Pitch Arm and Weight Assembly 8
Roller Assembly 9
Optional Front Roller Assemblies 11
Attachments and Accessories 13

© 2026—The Toro® Company
8111 Lyndale Avenue South
Bloomington, MN 55420

Contact us at www.Toro.com.
Printed in the USA.
All Rights Reserved

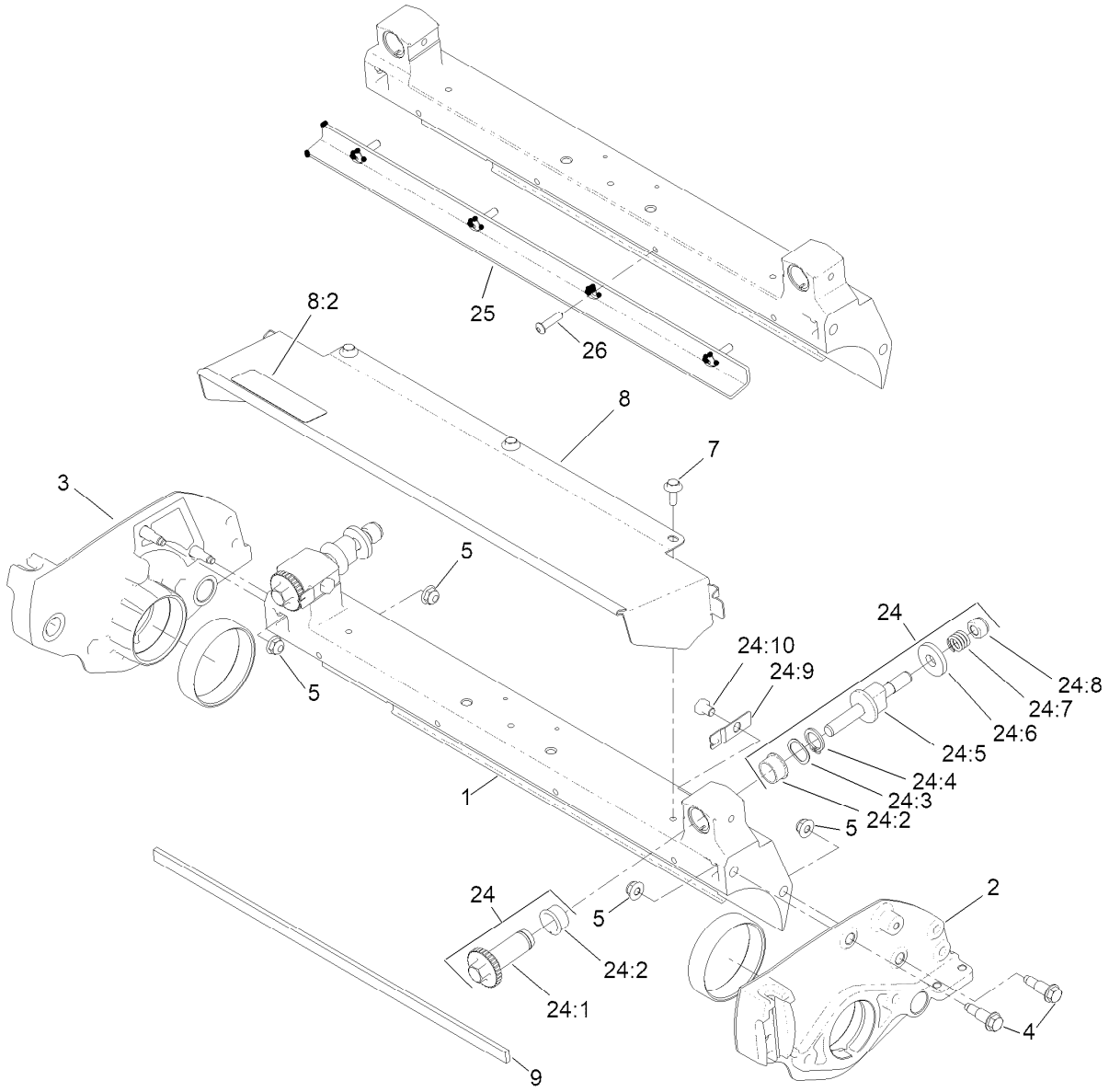

Frame Assembly

Ref.	Part Number	Qty.	Description
1	119-9303	1	Crossmember
2	147-0845	1	Sideplate ASM,GR Cu LH
3	147-0847	1	Sideplate ASM,GR Cu RH
4	115-7042	4	Bolt-Shoulder, Flange
5	119-4041	4	Nut-HF
7	119-4012	3	Screw-HWHTF
8	119-4095	1	Grass Shield ASM
8:2	137-9706	1	Decal-Warning
9	106-2619	1	Strip-Seal
24	121-2637	1	DPA Rebuild Kit
24:1	106-5363	2	Shaft-Adjuster

Ref.	Part Number	Qty.	Description
24:2	106-5344	4	Bushing-Flange, Keyed
24:3	119-4164	2	Washer-Wave
24:4	32120-93	2	Ring-Retaining
24:5	137-6130	2	Screw-Adjuster, Bedbar
24:6	119-4155	2	Washer-Hardened
24:7	119-4156	2	Spring-Compression
24:8	119-4039	2	Nut-Hex
24:9	99-2097	2	Detent
24:10	119-4067	2	Screw-HH
25	147-1290-03	1	Bar-Cutoff
26	87-6620	4	Screw-Tph Thd Form

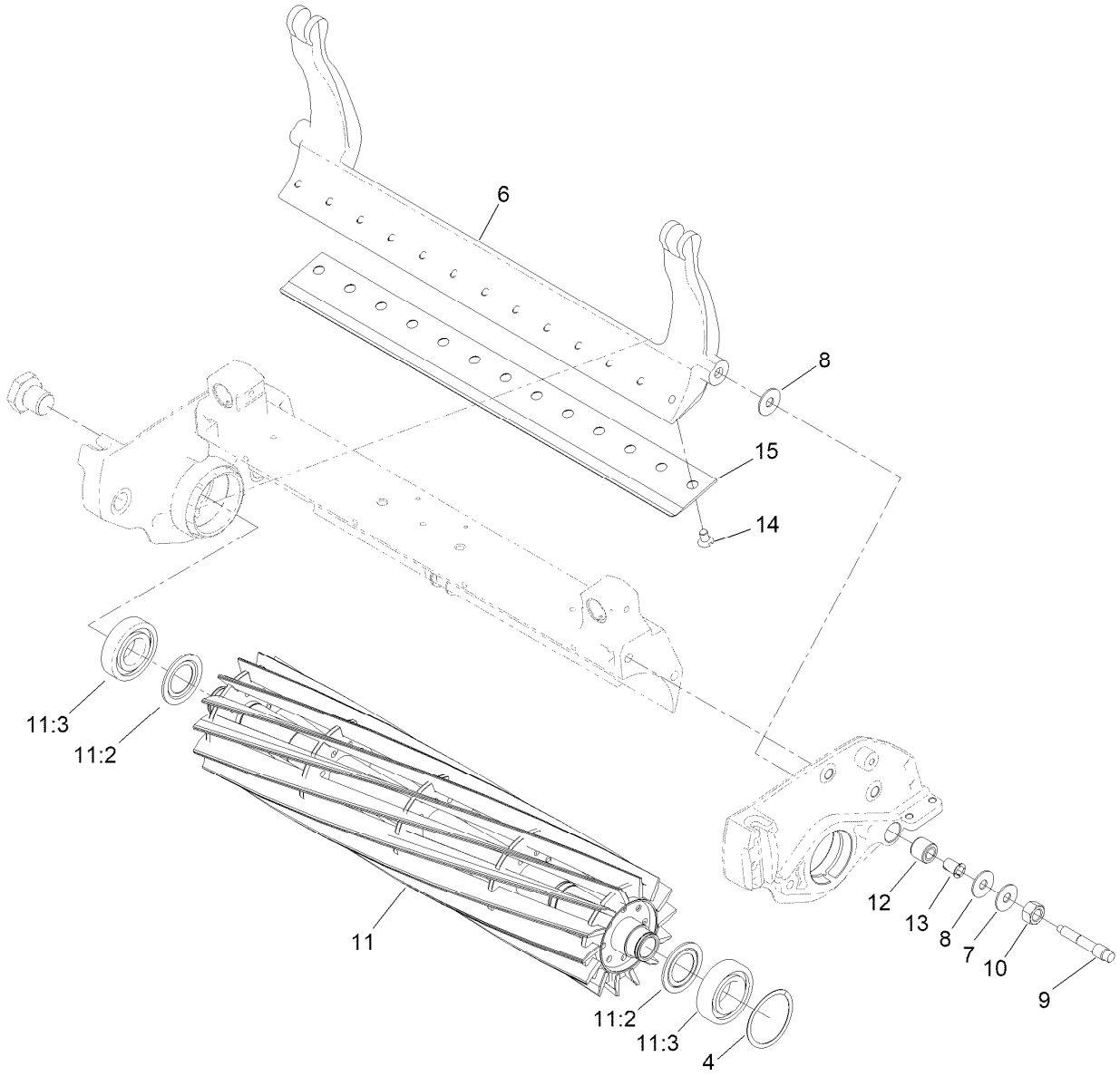

Reel Assembly

Ref.	Part Number	Qty.	Description
4	115-5258	1	Spring-Wire, Flat
6	106-2648-01	1	Bedbar
7	119-4150	2	Washer-Flat
8	52-2900	4	Washer-Plastic
9	117-9493	2	Bolt-Bedbar
10	140-9234	2	Nut-Hex Lock
11	137-8511	1	21 Inch 8 Blade Low Drag Edge Series+ Reel ASM
11	137-8512	1	21 Inch 11 Blade Low Drag Edge Series+ Reel ASM
11	137-8513	1	21 Inch 14 Blade Low Drag Edge Series+ Reel ASM
11:2	115-3299	2	Seal-Flocked
11:3	140-5510	2	Bearing-Sealed, Stainless
12	119-4153	2	Rubber Bushing ASM
13	52-2890	2	Bushing-Nylon
14	119-4151	13	Screw-Bedknife

Ref.	Part Number	Qty.	Description
15	108-4302	1	Bedknife-Tournament, Extended (GR21) ●
15	108-4303	1	Bedknife-Microcut, Extended (GR21) ●
15	115-1880	1	Bedknife-Edgemax Microcut (GR21)
15	115-1881	1	Bedknife-Edgemax Tournament (GR21) ●
15	137-6092	1	Bedknife-Edgemax Fairway (GR21) ●
15	137-6097	1	Bedknife-Fairway (GR21) ●
15	93-4262	1	Bedknife-Microcut (GR21) ●
15	93-4263	1	Bedknife-Tournament Cut (GR21) ●
15	93-4264	1	Bedknife-Low Cut (GR21) ●
15	94-6392	1	Bedknife-Highcut (GR21) ●

● Optional Equipment

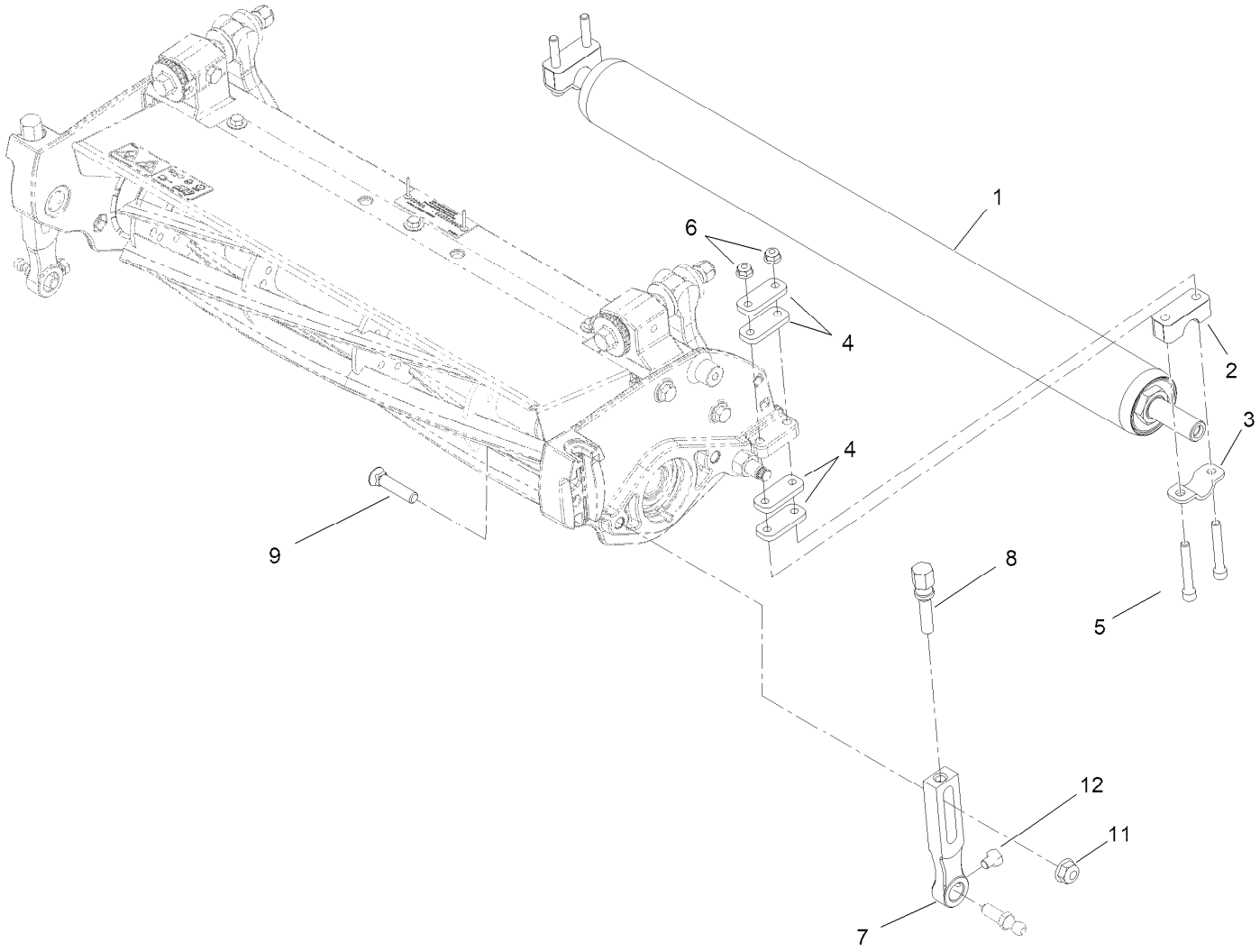

Rear Roller Assembly

Ref.	*Part Number*	*Qty.*	*Description*
1	140-5560	1	GR21 Steel Rear Roller ASM (2.0In)
2	119-4166	2	Spacer-Height, Roller
3	119-4157	2	Retainer-Shaft
4	119-4165	8	Shim-Height, Roller
5	3274-54	4	Screw-HSH
6	119-4040	4	Nut-HF, NI
7	140-5691	2	Bracket-GR Front HOC
8	110-7352	2	Screw-HOC
9	99-3773	2	Bolt-Plow
11	133-7570	2	Nut-Flange, NI
12	119-4067	2	Screw-HH

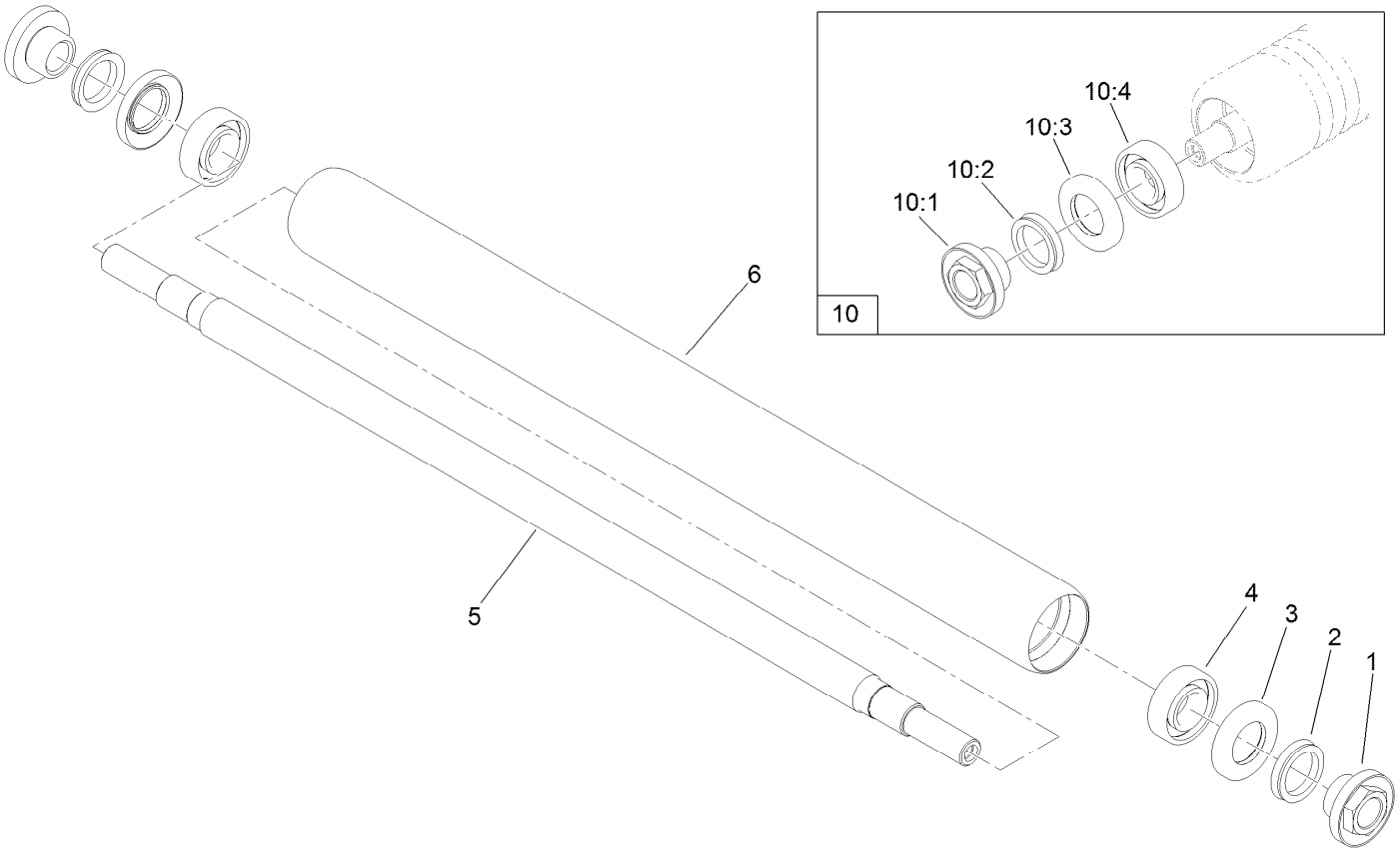

Rear Full Roller Assembly No. 140-5560

Ref.	*Part Number*	*Qty.*	*Description*
1	147-0701	2	Nut-Lock, Bearing
2	106-6942	2	V-Ring
3	106-6941	2	Seal
4	251-347	2	Bearing-Ball
5	147-1347	1	Shaft-Roller (21In)
6	140-5541	1	Tube Roller 2.0In DIA X 22.15In
10	140-5552	1	GR Roller Rebuild Kit
10:1	147-0701	2	Nut-Lock, Bearing
10:2	106-6942	2	V-Ring
10:3	106-6941	2	Seal
10:4	251-347	2	Bearing-Ball

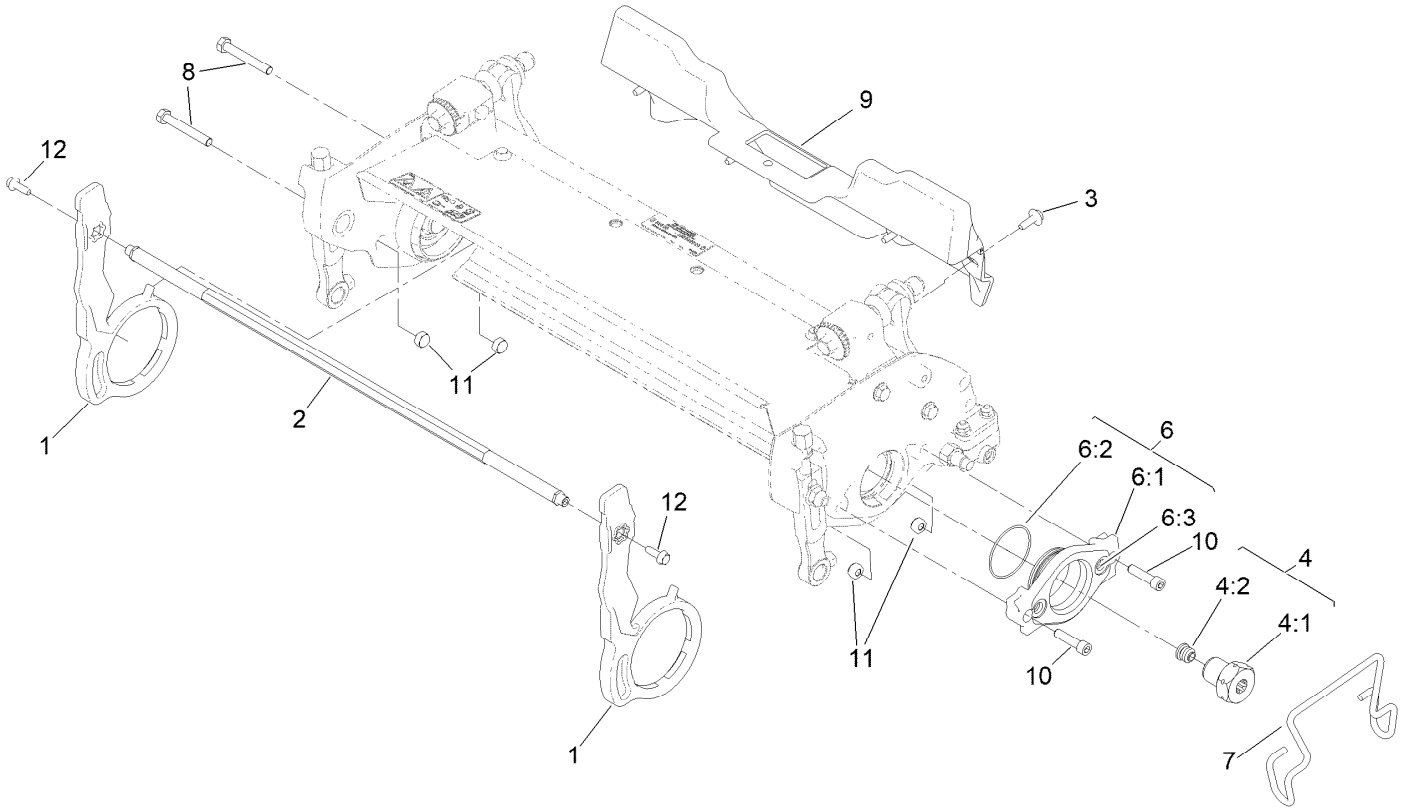

Pitch Arm and Weight Assembly

Ref.	Part Number	Qty.	Description
1	164-3017	2	Arm-Pitch
2	117-9456	1	Crosslink
3	119-4012	4	Screw-HWHTF
4	120-3221	1	LH Reel Nut ASM
4:1		1	Nut-Reel, Splined (LH) ●
4:2	120-3220	1	Plug-Plastic
6	115-5227	1	Motor Adapter ASM
6:1	115-3294	1	Adaptor-Motor
6:2	360-0398	1	O-Ring
6:3	237-22	2	O-Ring
7	117-6706	1	Clamp-Motor
8	322-11	2	Screw-HH
9	117-6849	1	Shield-Spring
10	3274-18	2	Screw-HSH
11	119-4038	4	Nut-Hex
12	131-6150	2	Screw-HWHTF

● Not serviced separately

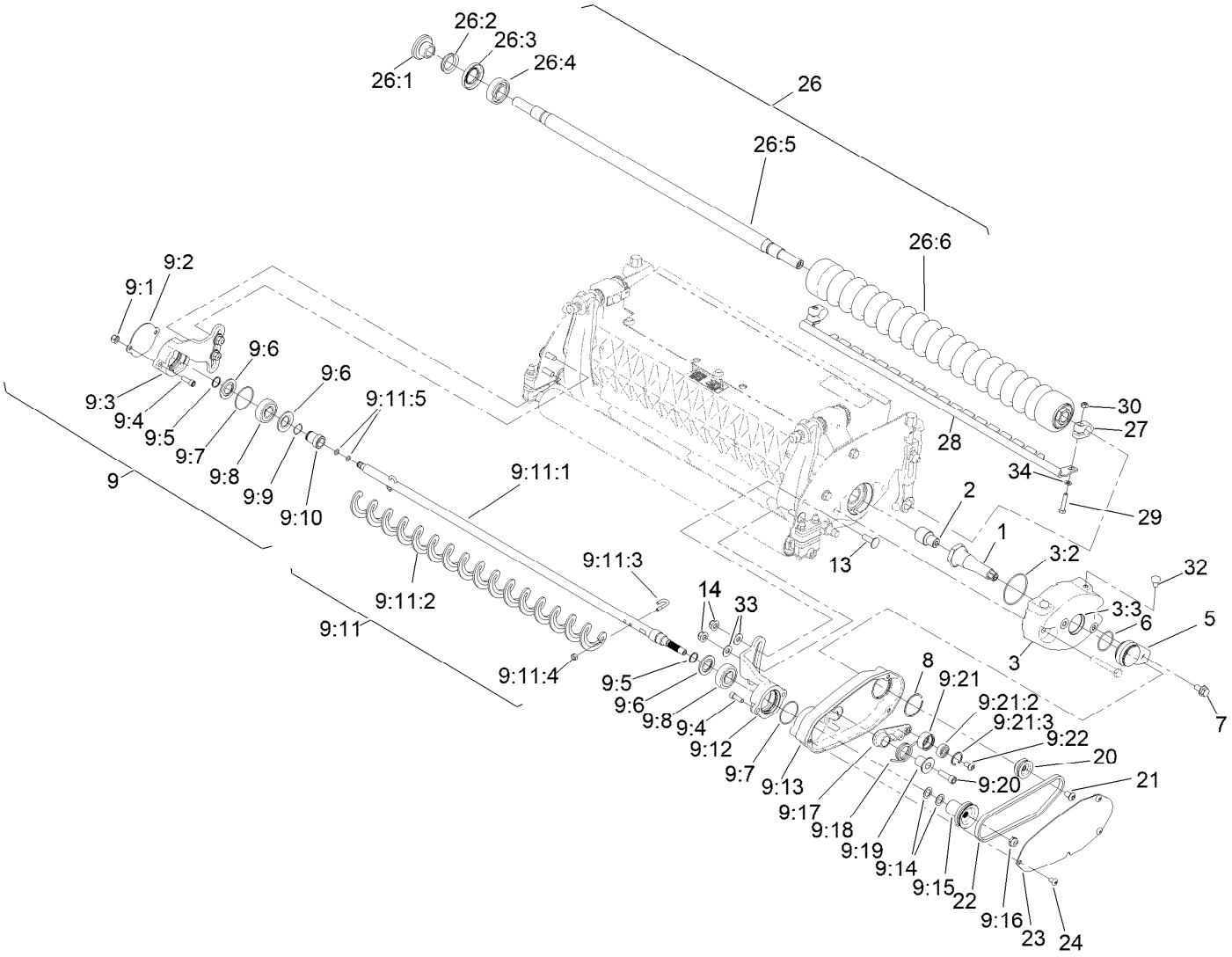

Roller Assembly

Ref.	Part Number	Qty.	Description
1	131-1842	1	Shaft-Drive
2	147-1040	1	Adapter-RH (GR)
3	115-3340	1	Weight ASM, GR
3:2	360-0398	1	O-Ring
3:3	121-4609	1	Plug-Expansion
5	131-1852	1	Adapter-Housing
6	119-1156	1	O-Ring
7	114-7728	1	Screw-HHF, Patch
8	131-1880	1	Ring-Retaining, EXT
9		1	GR RRB Sub-Assembly ●
9:1	3296-42	2	Nut-Lock, NI
9:2	131-1844	1	Cover-Bearing
9:3	131-1840	1	Bracket-Bearing, LH
9:4	3274-8	4	Screw-HSH
9:5	132-0716	2	Ring-Retaining, External
9:6	132-0700	3	Seal-Flocked
9:7	131-1864	2	O-Ring
9:8	132-0703	2	Bearing-Ball, Spherical

Ref.	Part Number	Qty.	Description
9:9	115-7143	1	Spring-Wave
9:10	132-0718	1	Collar-Shaft,Stepped
9:11	132-0724	1	Rollerbrush ASM
9:11:1	132-0702	1	Shaft-Brush
9:11:2	105-6792	1	Brush-Roller
9:11:3	104-1830	2	Bolt-J
9:11:4	3296-2	2	Nut-Lock, NI
9:11:5	132-0717	2	O Ring
9:12	131-1838	1	Bracket-Bearing, RH
9:13	120-2830	1	Housing-Drive, Brush
9:14	112-6957	2	Washer-Hardened
9:15	132-0701	1	Pulley-Driven
9:16	121-4600	1	Nut-Hex
9:17	131-1846	1	Idler-Drive
9:18	131-1848	1	Spring-Torsion
9:19	131-1847	1	Bushing-Idler
9:20	127-8633	1	Screw-HSH, Patch
9:21	161-7356	1	Pulley - Idler, ASM

● Not serviced separately

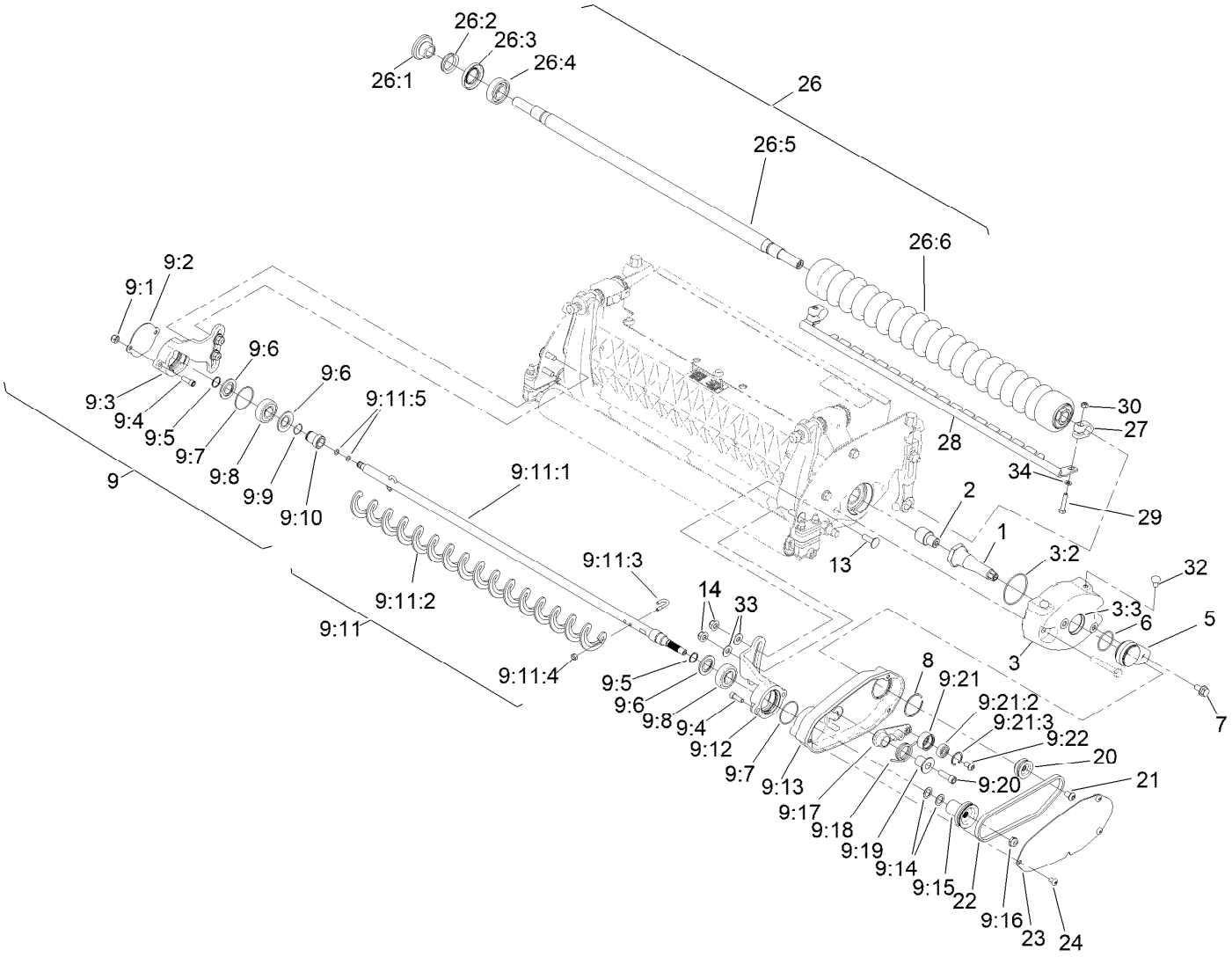

Roller Assembly (continued)

Ref.	Part Number	Qty.	Description
9:21:2	251-259	1	Bearing-Ball
9:21:3	104-4727	1	Ring-Retaining
9:22	131-1884	1	Screw-HSBH,Patch
13	3230-28	4	Screw-CARR
14	119-4041	4	Nut-HF
20	147-0785	1	Pulley-Driver, Greens
21	131-1884	1	Screw-HSBH,Patch
22	105-5720	1	Belt-V, Poly
23	131-1843-03	1	Cover-Drive, Belt
24	131-1883	3	Screw, Lock-HSBH
26	147-1215	1	GR21 Hhoc Wide Wiehle Roller ASM (Steel)
26:1	147-0701	2	Nut-Lock, Bearing
26:2	106-6942	2	V-Ring
26:3	106-6941	2	Seal
26:4	251-347	2	Bearing-Ball
26:5	147-1347	1	Shaft-Roller (21In)
26:6	147-1213	1	Tube-Roller, Hhoc Wide Wiehle(21In,Cz)
27	115-7364	2	Block-Clamp, Scraper
28	147-1330-03	1	Scraper-Wiehle, GR (21In) [black]
29	115-7372	2	Screw-HH
30	115-7373	2	Nut-Lock
32	119-4067	2	Screw-HH
33	98-3499	4	Washer-Flat
34	33093-00	2	Washer-Flat

● Not serviced separately

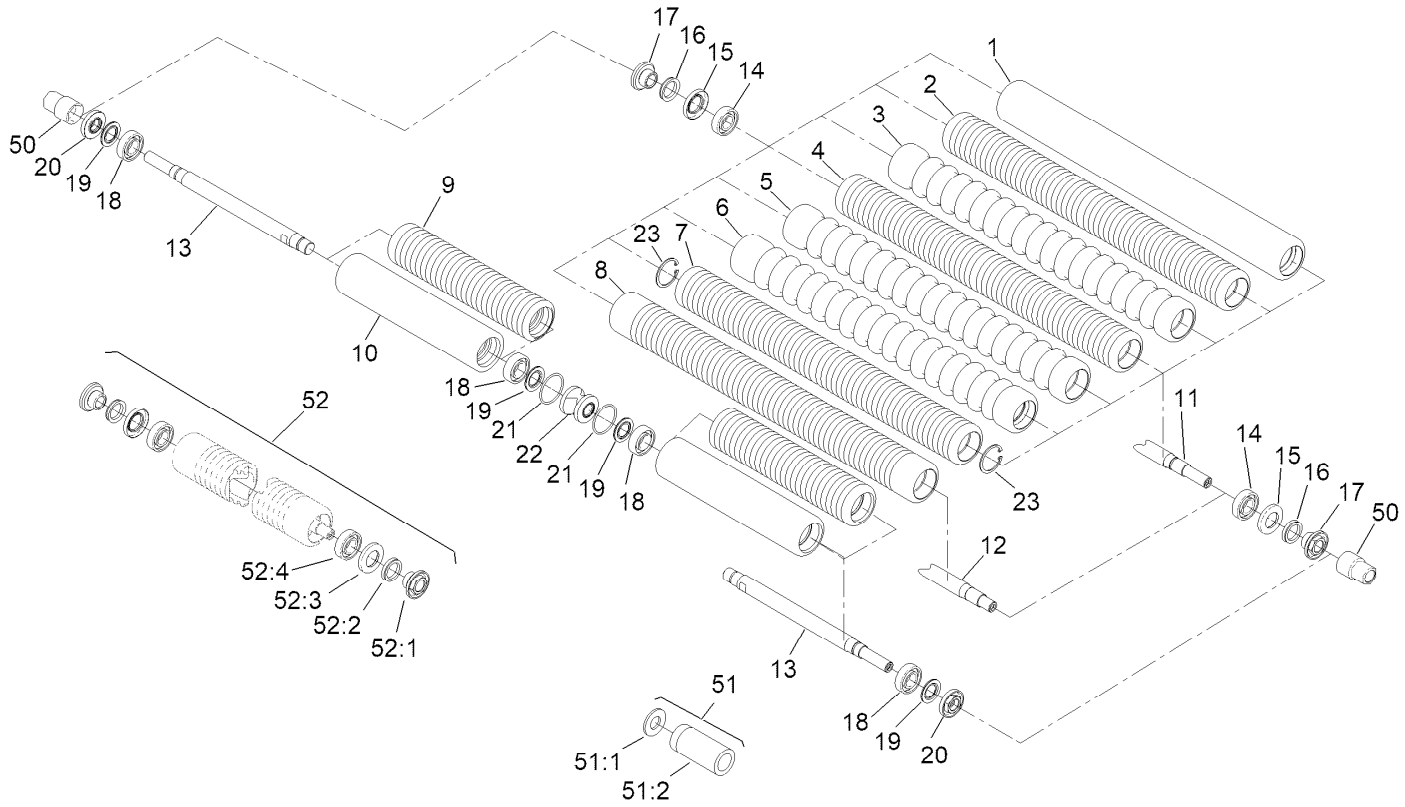

Optional Front Roller Assemblies

Ref.	Part Number	Qty.	Description
1	04257	1	GR21 Full Front Roller (2.5 DIA)
2	04267	1	GR21 Paspalum Wiehle Roller ASM
3	04256	1	GR21 Wide Wiehle Roller (.93 Spacing)
4	04255	1	GR21 Narrow Wiehle Roller (.200 Spacing)
5	107-3514	1	GR21 Steel Wide Roller ASM
6	147-1215	1	GR21 Hhoc Wide Wiehle Roller ASM (Steel)
7	107-3510	1	GR21 Steel Narrow Wiehle Roller ASM
8	04258	1	GR21 Long Narrow Wiehle Roller
9	04081	1	GR21 Split Narrow Wiehle Roller ASM
9	147-1163	1	GR21 Split Narrow Wiehle Roller ASM ▲
10	04088	1	GR21 Split Full Front Roller ASM
10	147-1186	1	GR21 Split Full Front Roller ASM ■
11	147-1347	1	Shaft-Roller (21In)
12	120-5404	1	Shaft-Roller
13	147-1346	2	Shaft-Roller (21In, Split)(LD)
14	251-347	2	Bearing-Ball
15	106-6941	2	Seal
16	106-6942	2	V-Ring
17	147-0701	2	Nut-Lock, Bearing
18	117-6831	4	Bearing-Ball, Stainless
19	115-5604	4	Washer-Sealing, Flocked
20	147-0702	2	Nut-Bearing Lock
21	117-9066	2	O-Ring
22	117-9077	1	Sleeve-Roller

● Optional Service Tool
▲ Service Roller for 04081
■ Service Roller for 04088

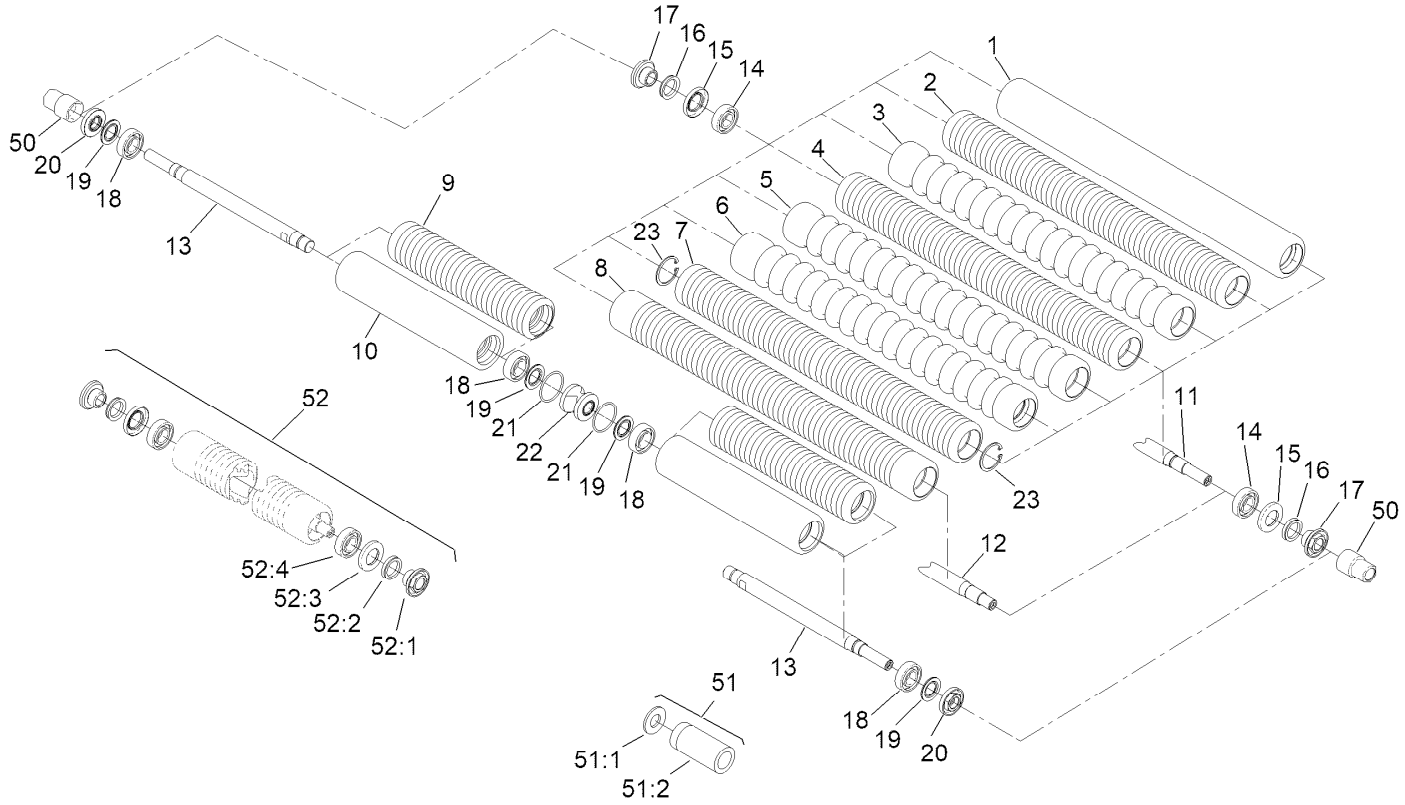

Optional Front Roller Assemblies (continued)

Ref.	Part Number	Qty.	Description
23	107-3512	2	Ring-Snap, Internal
50	147-1132	2	Tool-Drive, Roller Nut ●
51	140-5553	2	GR Roller Rebuild Tool Kit ●
51:1	107-8133	1	Washer-Flat
51:2	115-0853	1	Tool-Bearing/Outer Seal

Ref.	Part Number	Qty.	Description
52	140-5552	2	GR Roller Rebuild Kit
52:1	147-0701	2	Nut-Lock, Bearing
52:2	106-6942	2	V-Ring
52:3	106-6941	2	Seal
52:4	251-347	2	Bearing-Ball

● Optional Service Tool
▲ Service Roller for 04081
■ Service Roller for 04088

Attachments and Accessories

For 04658 — 11-Blade EdgeSeries DPA Cutting Unit Greensmaster 3300, 3400, or 3360 with GeoLink Mow Series Traction Unit

Product Name	Model/Part
GR21 Split Narrow Wiehle Roller ASM	04081
GR21 Split Full Front Roller ASM	04088
Narrow Wiehle Roller (Qty 1)	04255
Wide Wiehle Roller (Qty 1)	04256
Front Full Smooth Roller (Qty 1)	04257
Extended Narrow Wiehle Roller (Qty 1)	04258
Paspalum Wiehle Roller (Qty 1)	04267
21in Soft Grooming Brush	04270
21in Stiff Grooming Brush	04271
Turf Evaluator	04399
Steel Roller (Qty 1)	04628
Universal Groomer Drive Kit	04648
Rear Roller Brush, Greensmaster 3250-D, TriFlex 3300, and 3400 Series DPA Cutting Units with Universal Groomer	04650
21in Twin Tip Groomer Reel	04802
Bedbar	106-2648-01
Steel Roller Asm	107-3509
Narrow Wiehle Steel Roller Asm	107-3510
Wide Wiehle Steel Roller Asm	107-3514
Bedknife-Tournament, Extended	108-4302
Bedknife-Microcut, Extended	108-4303
Bedknife-EdgeMax, Microcut	115-1880
Bedknife-EdgeMax, Tournament Cut	115-1881
Front Brush for Narrow Wiehle Roller (Qty 1)	115-7377
Front Brush for Wide Wiehle Roller (Qty 1)	115-7378
Front Brush for Full Roller (Qty 1)	115-7379
Front Comb for Narrow Wiehle Roller (Qty 1)	115-7380
Front Comb for Wide Wiehle Roller (Qty 1)	115-7381
Front Comb for Full Roller (Qty 1)	115-7382
Rear Roller Adjustment (Qty 1)	120-9602
Rear Roller Scraper (Qty 1)	121-2260
MVP Kit-Cutting Unit Re-Build	121-2637
Front Scraper for Narrow Wiehle Roller (Qty 1)	125-3503
Front Scraper for Wide Wiehle Roller (Qty 1)	125-3504
Front Scraper for Full Roller (Qty 1)	125-3505
Toro Reel Paper (10 Pack)	125-5610
21in Soft Grooming Brush Kit	127-1547
21in Stiff Grooming Brush Kit	127-1548
Angle Indicator	131-6828
Angle Indicator Mount	131-6829
RRB Adapter Kit	132-0723
Tool-Hand Tap 15/16-16 (GR DPA Reel)	137-0926
Tool-Hand Tap 15/16-16, LH (GR DPA Reel)	137-0927
Bedknife-EdgeMax	137-6092
Bedknife-Fairway	137-6097

Attachments and Accessories (continued)

21 Inch 8 Blade Low Drag Reel ASM (EdgeSeries+) 137-8511
21 Inch 11 Blade Low Drag Reel ASM (EdgeSeries+) 137-8512
21 Inch 14 Blade Low Drag Reel ASM (EdgeSeries+) 137-8513
8 Blade Heavy Duty Reel ASM 137-8517
Bedknife-EdgeMax, Microcut Short 139-4320
Bedknife-EdgeMax, Tournament Short 139-4321
Shim-Toro Reel (.002in) 140-5531
GR Roller Rebuild Kit 140-5552
Roller Rebuild Tool Kit, Greensmaster Cutting Units 140-5553
Full Rear Roller(2.0in Dia)(21in) 140-5560
Blade-GR Groomer, Twin Tip (0.032in) 140-5580
Blade-GR Groomer, Helix (0.028in) 140-5581
Blade-GR Groomer, Helix (0.015in) 140-5582
Tool-Drive, Roller Nut 147-1132
GR21 HHOC Wide Wiehle Roller ASM (Steel) 147-1215
HD Full Front Roller Kit (GR21) 147-1382
Cast Iron Wiehle Roller (Qty 1) 71-1550
Bedknife-Microcut 93-4262
Bedknife-Tournament Cut 93-4263
Bedknife-Low Cut 93-4264
Bedknife-Highcut 94-6392
Height-of-Cut Bar 94-9010
Bedbar-Aggressive 99-3794-0P

Notes:



Count on it.