Form No. 3484-147 Rev A

TORO®

Count on it.

Parts Catalog

GrandStand® HDX Mower

With 60in TURBO FORCE® Cutting Unit

Model No. 72510—Serial No. 421200000 and Up

Register at www.Toro.com.
Original Instructions (EN)

3484-147 A

Ordering Replacement Parts

To order replacement parts, please supply the part number, the quantity, and the description of each part desired.

Understanding Reference Numbers

Each identified part in an illustration has a reference number. The reference number for a part also appears in the parts list, along with other information about the part.

This catalog uses two special reference number formats, one to indicate parts in a service assembly and another to indicate the quantity of a given part in an illustration.

Service Assembly Reference Numbers

Parts in service assemblies have reference numbers in the form a:b. The a represents the reference number of the entire service assembly and the b represents a sequential number unique to each part within the service assembly.

For example, a wheel assembly might be identified by reference number 6, the tire by 6:1, the valve by 6:2, and the wheel by 6:3. When you order the assembly identified by reference number 6, you receive all parts identified by reference numbers 6:1,6:2, and 6:3. However, you may also order any part individually. Reference numbers of this type appear in illustration and in parts lists.

Reference Numbers Indicating Quantity

In an illustration, if a reference number indicates more than one part, the reference number has the form nX y. The n represents the quantity of the part, the X is the multiplication symbol, and the y represents the reference number.

For example, in an illustration, the reference number 2X 37 means that two of the parts identified by reference number 37 are indicated.

Contents

60 Inch Deck Assembly 4
Deck Assembly No. 145-1617 6
Deflector Assembly No. 144-2635 8
Spindle Assembly No. 137-9780 10
Ground Drive Assembly 12
LH Transmission Assembly No. 161-1323 14
RH Transmission Assembly No. 161-9807 16
Hydraulic Hose Assembly 18
Motion Control Assembly 20
Control Handle Assembly No. 132-5157 22
Control Handle Assembly No. 132-5158 24
Parking Brake Assembly 26
Deck Lift Assembly 28
HOC Lever Assembly No. 161-6735 30
Deck Strut Assembly No. 147-4557 32
Frame Assembly 34
Wheel and Bearing Assembly 36
Platform Assembly 38
Engine Assembly 40
Muffler Guard Assembly No. 146-8503 42
Fuel Tank Assembly 44
Electrical Assembly 46
Attachments and Accessories 48

© 2026—The Toro® Company
8111 Lyndale Avenue South
Bloomington, MN 55420

Contact us at www.Toro.com.
Printed in the USA.
All Rights Reserved

60 Inch Deck Assembly

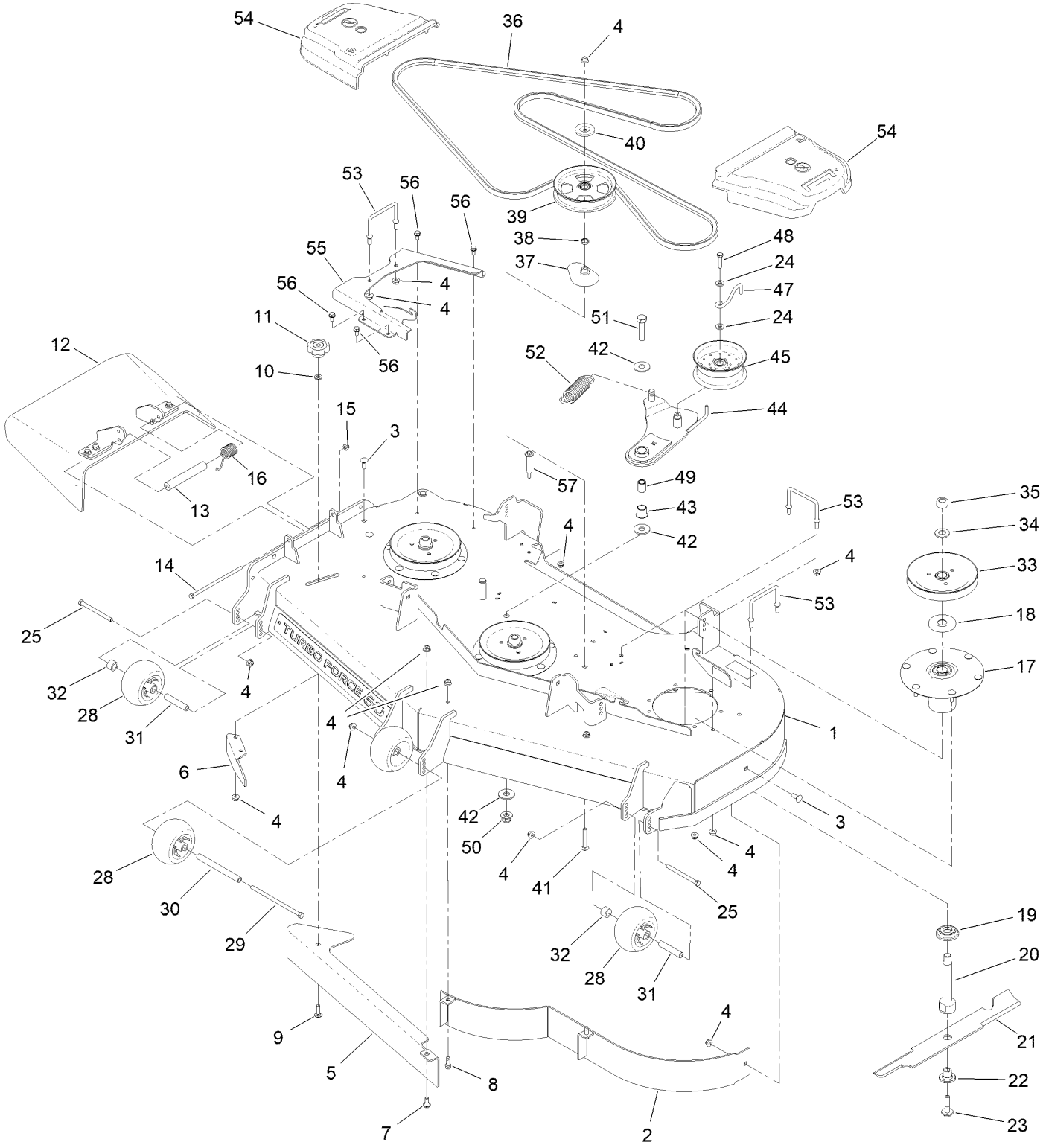

60 Inch Deck Assembly (continued)

Ref.	Part Number	Qty.	Description
1	145-1617	1	60 Deck ASM W/Decals
2	117-9701-01	1	Baffle ASM
3	3231-2	3	Bolt-CARR
4	119-4042	35	Nut-HF, NI
5	139-8106-01	1	Plate-Baffle, Formed [red]
6	106-3216-01	1	Baffle-Discharge
7	94-7582	1	Bolt-Shoulder
8	92-1624	2	Screw-HWH Thd Form
9	119-4162	1	Screw-CARR
10	100-4852	1	Washer-Hardened
11	109-1092	1	Knob
12	144-2635	1	Rubber Deflector ASM
13	105-4622	1	Spacer
14	322-50	1	Screw-HH
15	119-4041	1	Nut-HF
16	108-4052	1	Spring-Torsion
17	137-9780	3	Spindle ASM
18	103-1330	3	Guard-Bearing, Top
19	137-9784	3	Guard-Bottom
20	138-6045	3	Shaft-Spindle
21	140-1240	3	Blade
22	137-9787	3	Bushing-Hex
23	109-9220	3	Screw-Sems
24	138-7207	2	Spacer-Hub, Blower
25	323-23	2	Screw-HH
28	1-603299	4	Roller-Scalp, Anti
29	108-5388	1	Screw-HH
30	98-5967	1	Spacer-Wheel
31	133-2129	2	Tube-Shafting
32	133-2128	2	Tube-Spacer
33	138-6059	3	Sheave-Drive, Blade
34	103-2802	3	Washer
35	116-7306	3	Nut-Hex
36	145-3481	1	Gs 48 Deck Belt-V
37	109-2872	1	Spacer-Pulley
38	107-4293	1	Spacer-Plate, BBC
39	136-5404	1	Pulley-Idler, Flat
40	132-5153	1	Shield-Dust
41	3231-44	1	Screw-CARR
42	104-9216	3	Washer-Hardened
43	135-1248	1	Bushing, Igus
44	147-7796-03	1	Idler Arm ASM [black]
45	116-4666	1	Idler-Pulley, Flat
47	147-4644	1	Wireform Belt Guide,Idler, Top
48	323-8	1	Screw-HH
49	163-3438	1	Bushing-Idler Pivot
50	133-9681	1	Nut-HF
51	327-9	1	Screw-HH
52	108-5412	1	Spring-Extension
53	109-6982	3	Wireform-Cover
54	109-6936	2	Cover-Belt, LH
55	147-4552-01	1	Platform, Belt Cover 60
56	32144-70	4	Screw-HWHTF
57	112-3977	1	Bolt-Shoulder

Deck Assembly No. 145-1617

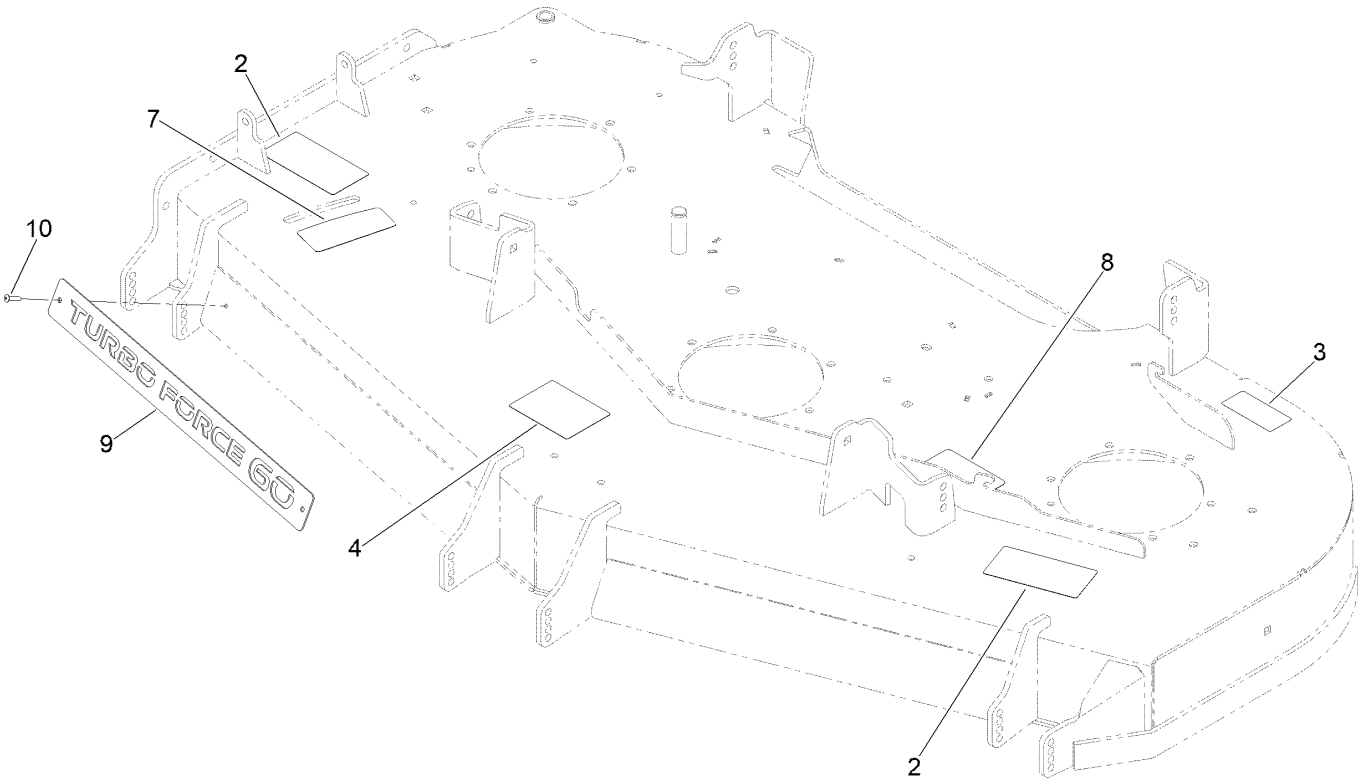

Deck Assembly No. 145-1617 (continued)

Ref.	Part Number	Qty.	Description
2	161-6620	2	Decal-Danger, Deck
3	116-8283	1	Decal-Torque, Bolt
4	127-0326	1	Decal-Scalp, Anti
7	138-1147	1	Decal - Baffle Adjustment
8	147-4766	1	Decal-Belt Routing
9	147-4631-03	1	Plate-Turbo Force
10	130-8451	2	Rivet-Trifold

Deflector Assembly No. 144-2635

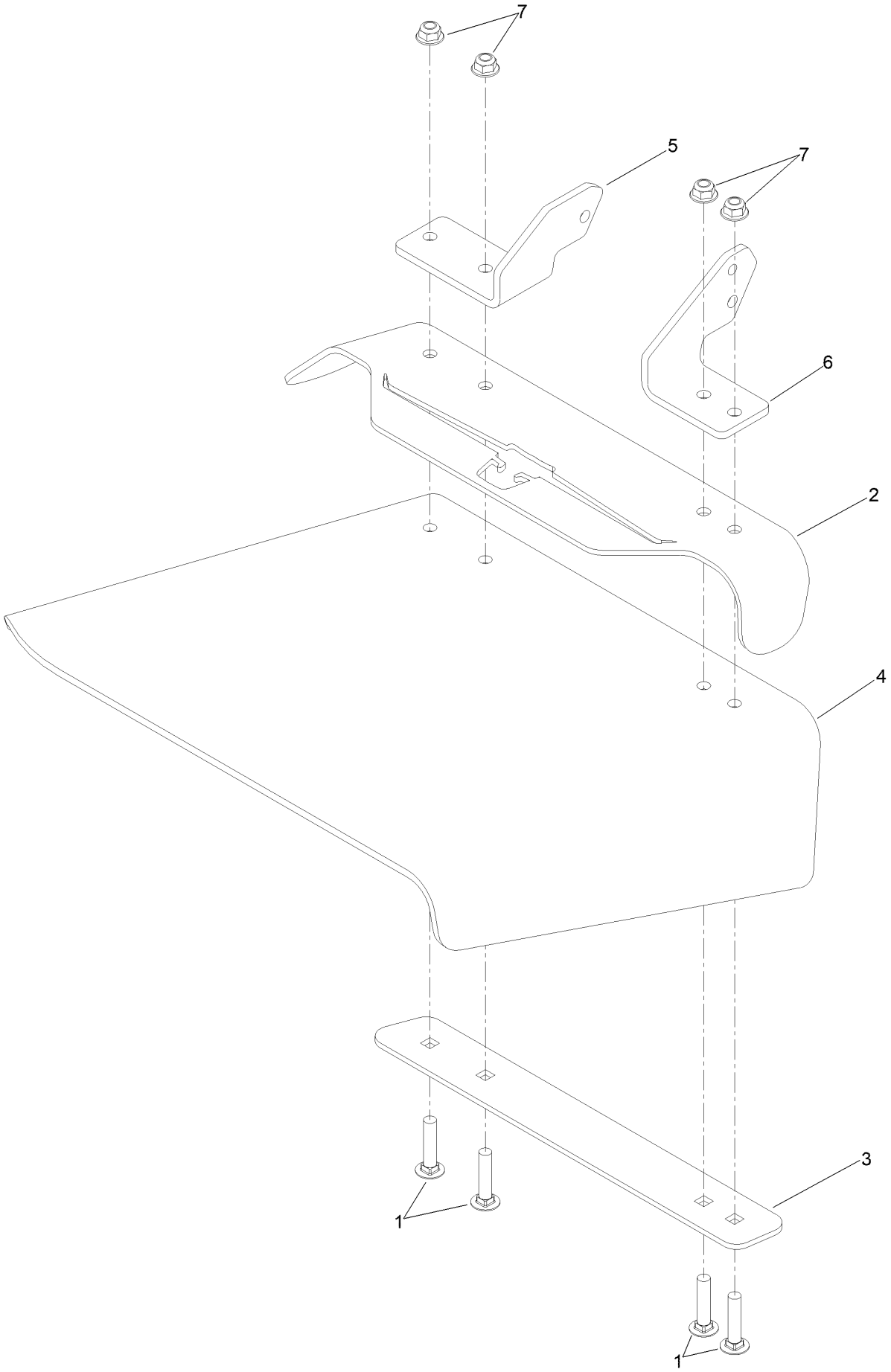

Deflector Assembly No. 144-2635 (continued)

Ref.	Part Number	Qty.	Description
1	3231-5	4	Screw-CARR
2	161-9815-01	1	Plate-Deflector Mount
3	106-3248-03	1	Strap-Discharge
4	161-3464	1	Deflector-Deck, Rubber
5	108-4059-01	1	Plate-Hinge, Rear
6	106-3253-01	1	Plate-Hinge, Front
7	119-4042	4	Nut-HF, NI

Spindle Assembly No. 137-9780

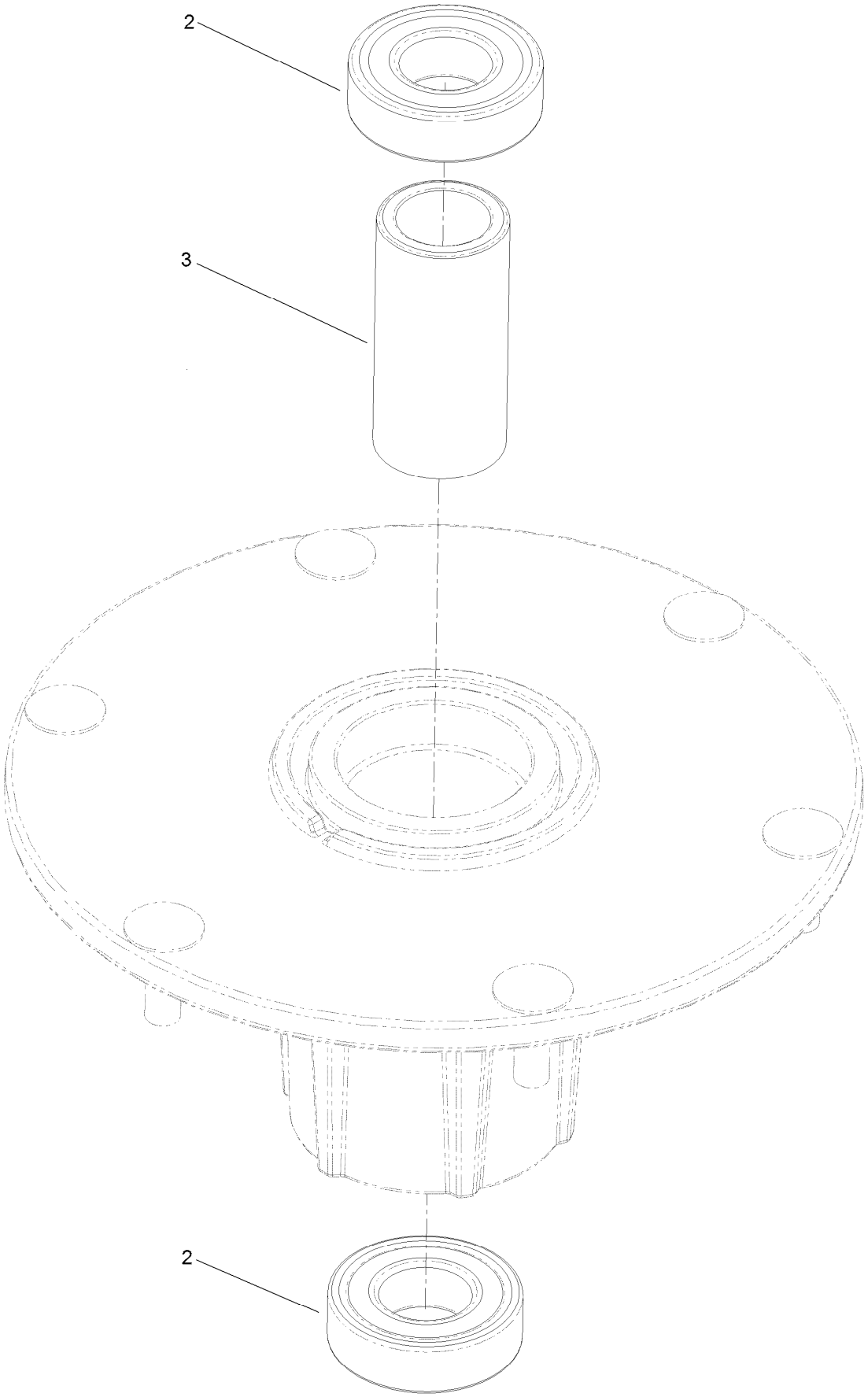

Spindle Assembly No. 137-9780 (continued)

Ref.	Part Number	Qty.	Description
2	116-0720	2	Bearing-Ball
3	138-6042	1	Spacer-Bearing

Ground Drive Assembly

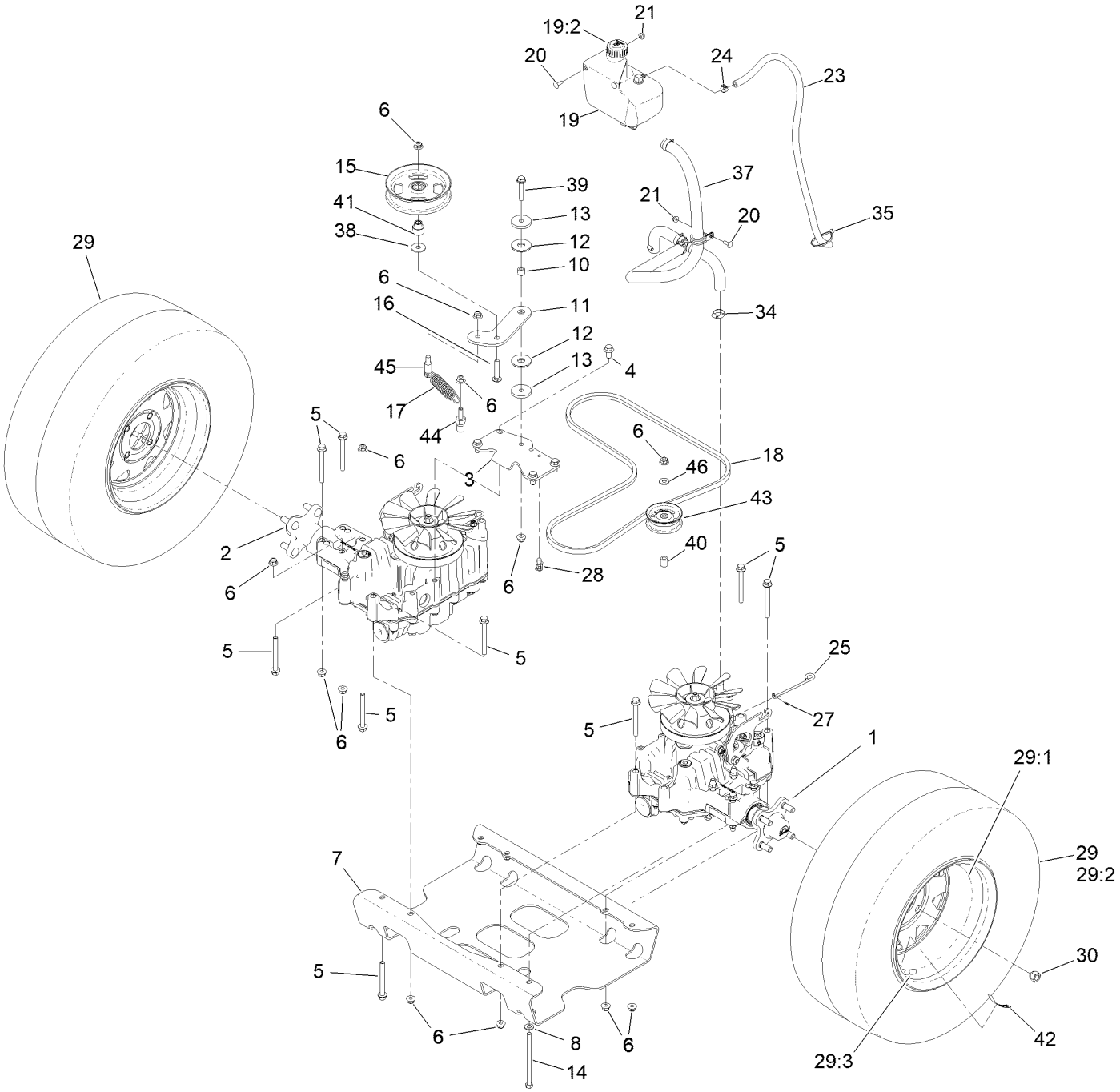

Ground Drive Assembly (continued)

Ref.	Part Number	Qty.	Description
1	161-1323	1	LH Transmisson (Tzt13Sy)
2	161-9807	1	RH Transmisson (Tzt13Sx)
3	147-4756-05	1	Plate, Support, Transaxle
4	161-1312	4	Screw-Bshs
5	116-4701	15	Screw-HHF
6	119-4042	19	Nut-HF, NI
7	147-4636-05	1	Plate-Hydro
8	3256-24	1	Washer-Plain
10	1-413088	1	Bushing-Lever, Lift
11	147-4757	1	Plate-Arm, Idler
12	114-0463	2	Washer-Friction, Composite
13	110-9981	2	Washer-Plain
14	323-25	1	Screw-HH
15	136-5405	1	Pulley-Idler, Flat
16	3231-6	1	Screw-CARR
17	138-1104	1	Spring-Extension
18	145-5186	1	Belt-V
19	132-1135	1	Tank-HYD
19:2	133-8677	1	Cap-Vented
19:5	140-9463	1	Strainer-Neck, Removable ●
20	3229-25	3	Screw-CARR
21	104-7201	3	Nut-HF, NI
23	109-0309	1	Hose-Fuel
24	92-2379	1	Clamp-Hose
25	145-6176	2	Rod-Bypass
27	108-2992	2	Pin-Hair
28	161-1316	2	Clip, Fir Tree
29	144-6607	2	Wheel And Tire ASM
29:1	144-6606	1	Wheel
29:2	140-7975	1	Tire
29:3	232-27	1	Stem-Valve
30	139-2564	8	Nut-Lug
34	2412-129	2	Clamp-Hose
35	3290-378	1	Tie-Cable
37		1	HYD Hose ASM ■
38	93-8806	1	Washer-Hardened
39	108-3742	1	Screw-HHF
40	115-1451	1	Spacer-Wheel
41	138-7227	1	Bushing-Idler
42	126-2055	2	Decal-Torque, Wheel Hub Lug
43	130-8362	1	Pulley-Idler, Flat
44	132-4724	1	Pin-Anchor, Spring
45	110-3841	1	Anchor-Spring
46	109-6658	1	Nut-Flange, NI

● Not illustrated

■ Not serviced separately

LH Transmission Assembly No. 161-1323

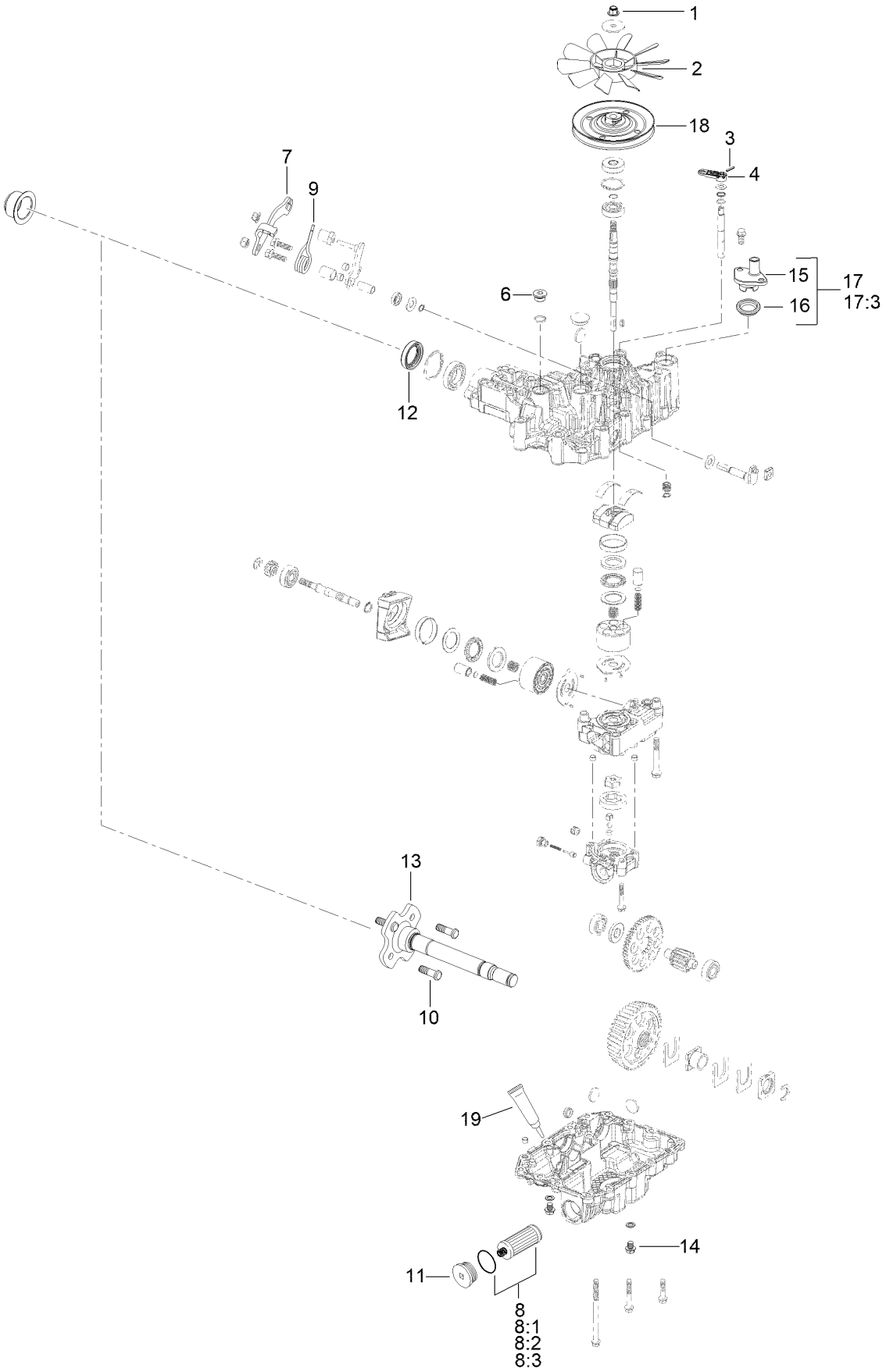

LH Transmission Assembly No. 161-1323 (continued)

Ref.	Part Number	Qty.	Description
1	132-4737	1	Nut-Lock
2	132-4738	1	Fan
3	104-3265	1	Pin
4	132-4700	1	Lever-Bypass
5	161-7919	1	Brake Kit, Y ●
6	132-4735	1	Cap-Oil
7	161-7914	1	Lever-Control, LH
8	144-3842	1	2 Transmission Filter Kit
8:1		2	Filter (1A6370-26450) ■
8:2	136-5410	2	O-Ring
8:3		4	Sealing Washer ● ■
9	137-4109	1	Spring-Torsion
10	137-9509	4	Stud-Wheel
11	138-4613	1	Cap-Oil Filter
12	139-5587	1	Seal-Axle, Ua
13	163-7372	1	Axle ASM Kit

Ref.	Part Number	Qty.	Description
13:1		2	Thrust Washer ● ■
13:2		1	Oil Seal Ua18Lip ● ■
13:3		1	Collar 25.4 ● ■
13:4		1	Flange ASM, Axle ● ■
13:5		1	Bearing 6006 ● ■
13:6		1	Ring 20 ● ■
13:7		1	Bushing ● ■
13:8		1	Ring 55 ● ■
14	139-5589	2	Drain Bolt
15	139-5590	1	Expansion Fitting
16	139-5591	1	Grommet Seal, Expansion Fitting
17	139-7871	1	Expansion Fitting - W/ Seal
17:3		1	M8*20 Flange Bolt ■
18	161-7916	1	Pulley
19	163-4197	1	Seal Kit, Hydro ●

● Not illustrated

■ Not serviced separately

RH Transmission Assembly No. 161-9807

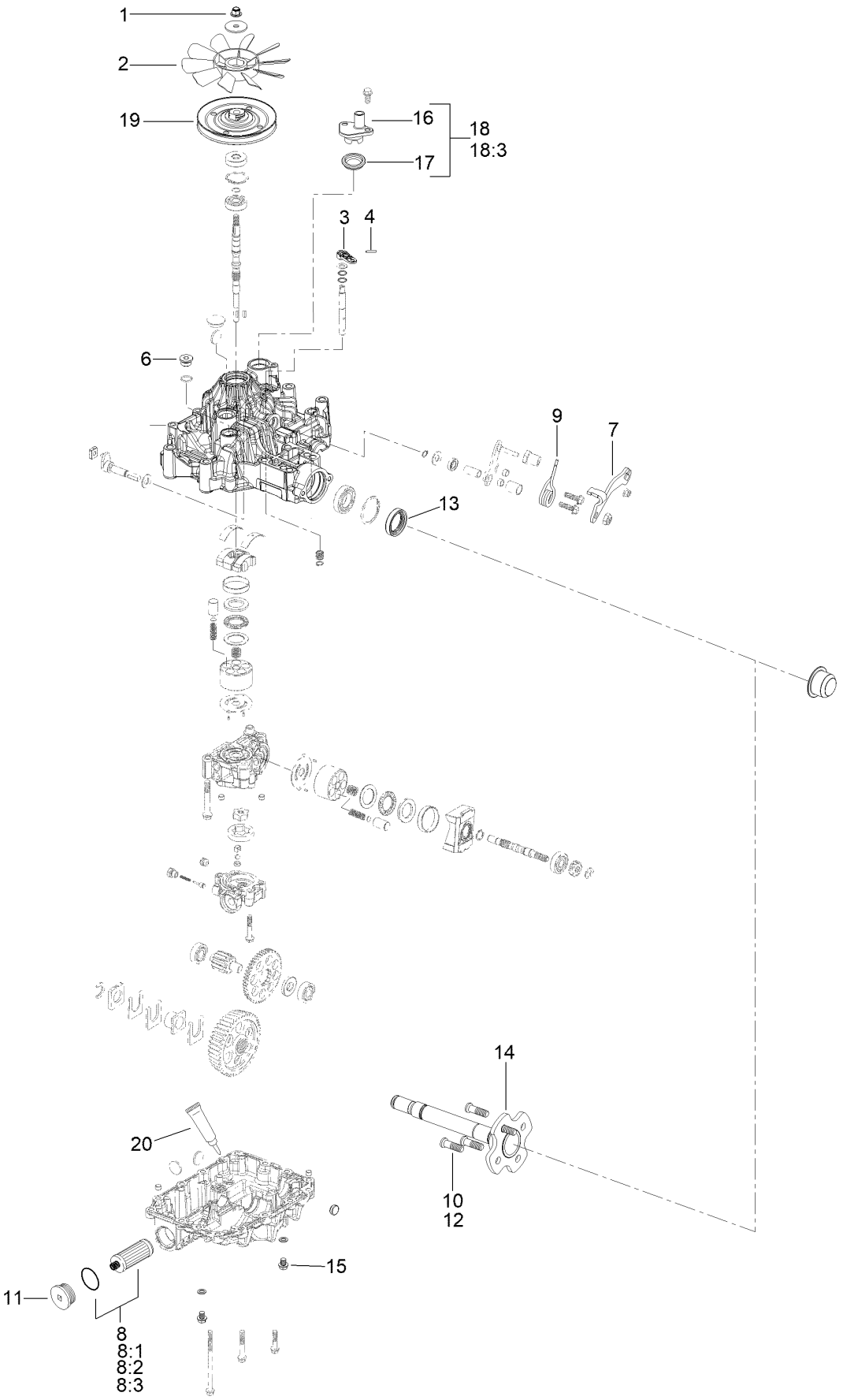

RH Transmission Assembly No. 161-9807 (continued)

Ref.	Part Number	Qty.	Description
1	132-4737	1	Nut-Lock
2	132-4738	1	Fan
3	104-3265	1	Pin
4	132-4700	1	Lever-Bypass
5	161-7917	1	Brake Kit, X ●
6	132-4735	1	Cap-Oil
7	161-7915	1	Lever-Control, RH
8	144-3842	1	2 Transmission Filter Kit
8:1		2	Filter (1A6370-26450) ■
8:2	136-5410	2	O-Ring
8:3		4	Sealing Washer ● ■
9	137-4109	1	Spring-Torsion
10	137-9509	1	Stud-Wheel
11	138-4613	1	Cap-Oil Filter
12	137-9509	4	Stud-Wheel
13	139-5587	1	Seal-Axle, Ua
14	163-7372	1	Axle ASM Kit

Ref.	Part Number	Qty.	Description
14:1		2	Thrust Washer ● ■
14:2		1	Oil Seal Ua18Lip ● ■
14:3		1	Collar 25.4 ● ■
14:4		1	Flange ASM, Axle ● ■
14:5		1	Bearing 6006 ● ■
14:6		1	Ring 20 ● ■
14:7		1	Bushing ● ■
14:8		1	Ring 55 ● ■
15	139-5589	2	Drain Bolt
16	139-5590	1	Expansion Fitting
17	139-5591	1	Grommet Seal, Expansion Fitting
18	139-7871	1	Expansion Fitting - W/ Seal
18:3		1	M8*20 Flange Bolt ■
19	161-7916	1	Pulley
20	163-4197	1	Seal Kit, Hydro ●

● Not illustrated

■ Not serviced separately

Hydraulic Hose Assembly

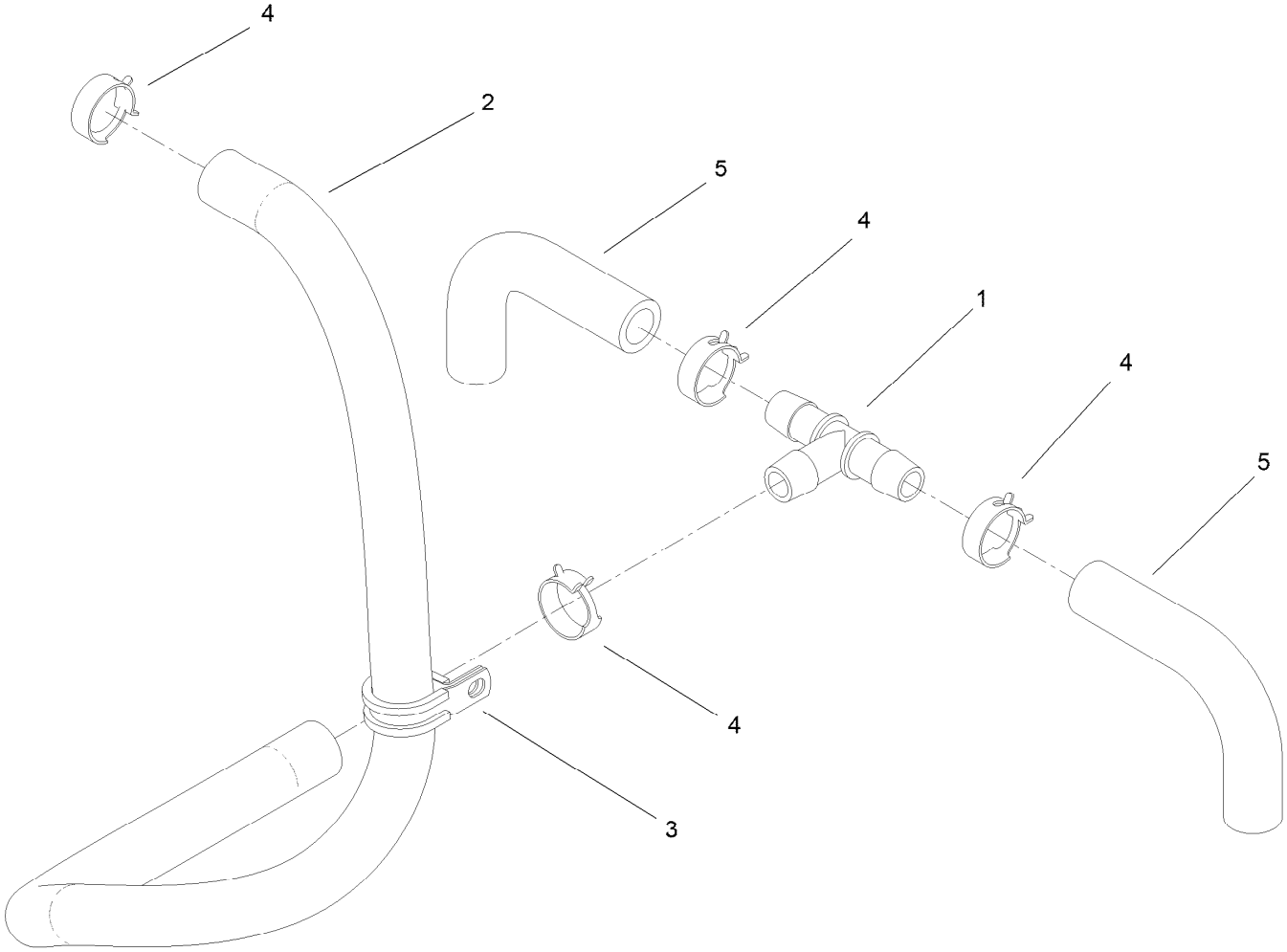

Hydraulic Hose Assembly (continued)

Ref.	Part Number	Qty.	Description
1	139-4055	1	Fitting Tee
2	145-1644	1	Hydraulic Hose
3	147-0201	1	R-Clamp
4	145-3599	4	Hose Clamp
5	145-6177	2	Hose-Hydraulic

Motion Control Assembly

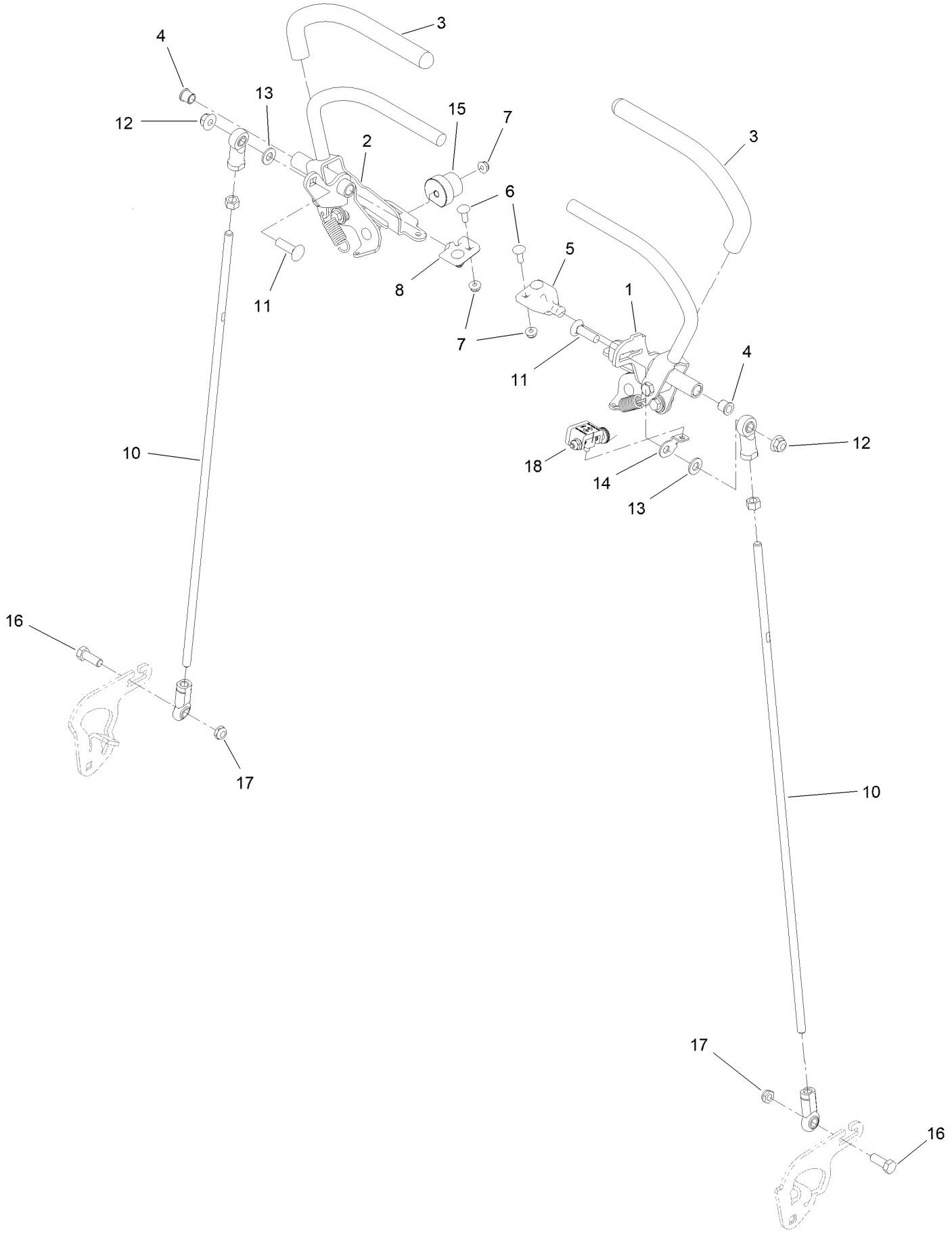

Motion Control Assembly (continued)

Ref.	Part Number	Qty.	Description
1	132-5157	1	LH Control Handle ASM
2	132-5158	1	RH Control Handle ASM
3	119-0222	2	Grip
4	103-9928	2	Bearing
5	120-3288	1	Tab-Pivot, LH
6	3229-1	4	Screw-CARR
7	104-7201	6	Nut-HF, NI
8	120-3287	1	Tab-Pivot, RH
10	161-2803	2	RH Control Rod ASM
11	3231-28	2	Screw-CARR
12	119-4042	2	Nut-HF, NI
13	3256-24	2	Washer-Plain
14	132-7538	1	Bracket-Adjustment, Speed
15	126-1499	2	Cam
16	323-6	2	Screw-HH
17	3296-59	2	Nut-Lock, NI
18	132-7595	1	Speed Setting Tool

Control Handle Assembly No. 132-5157

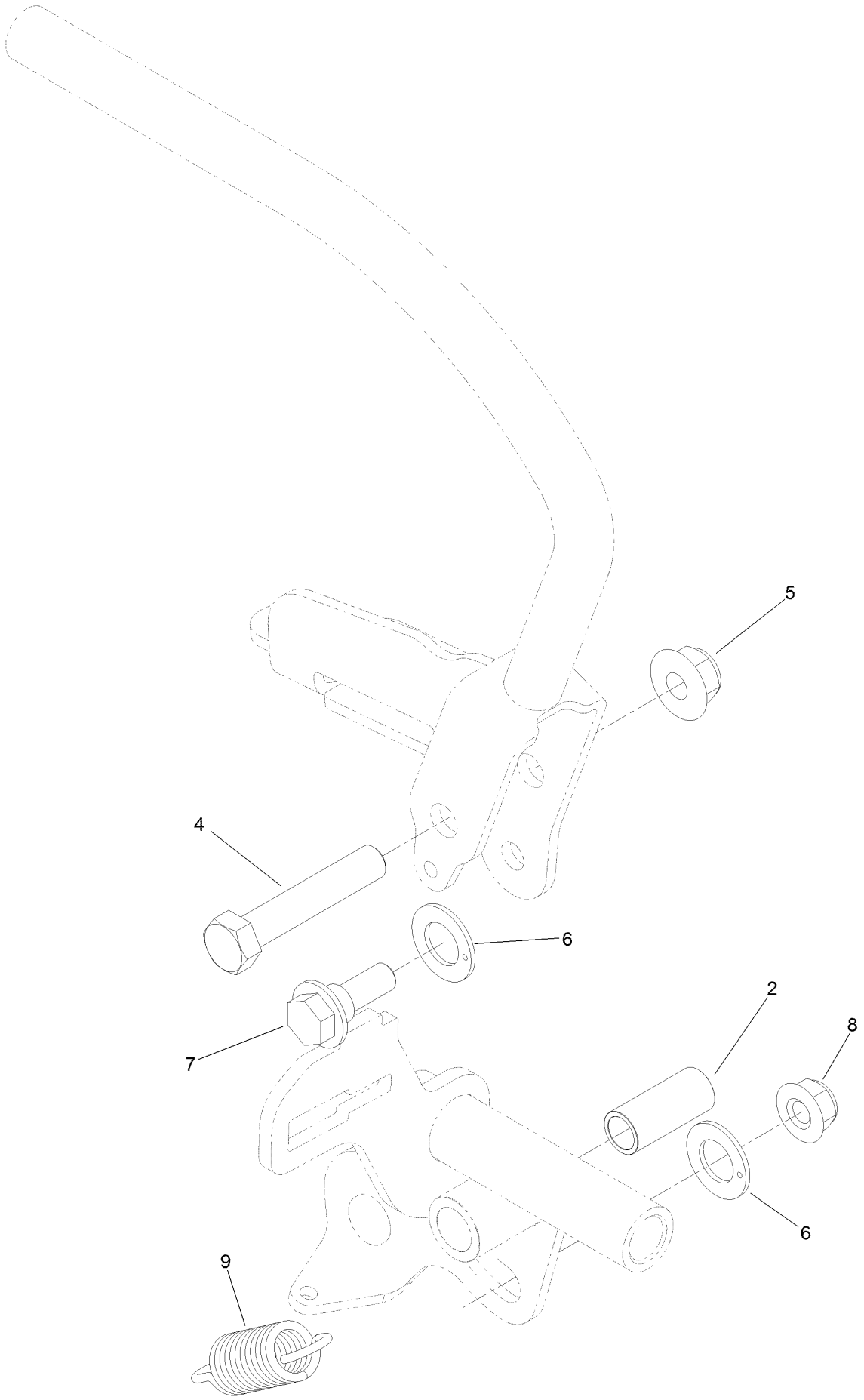

Control Handle Assembly No. 132-5157 (continued)

Ref.	Part Number	Qty.	Description
2	131-3562	1	Bearing-Sleeve
4	323-10	1	Screw-HH
5	119-4042	1	Nut-HF, NI
6	110-7191	2	Washer-Thrust
7	116-2670	1	Screw-Shoulder
8	119-4041	1	Nut-HF
9	132-5146	1	Spring-Extension

Control Handle Assembly No. 132-5158

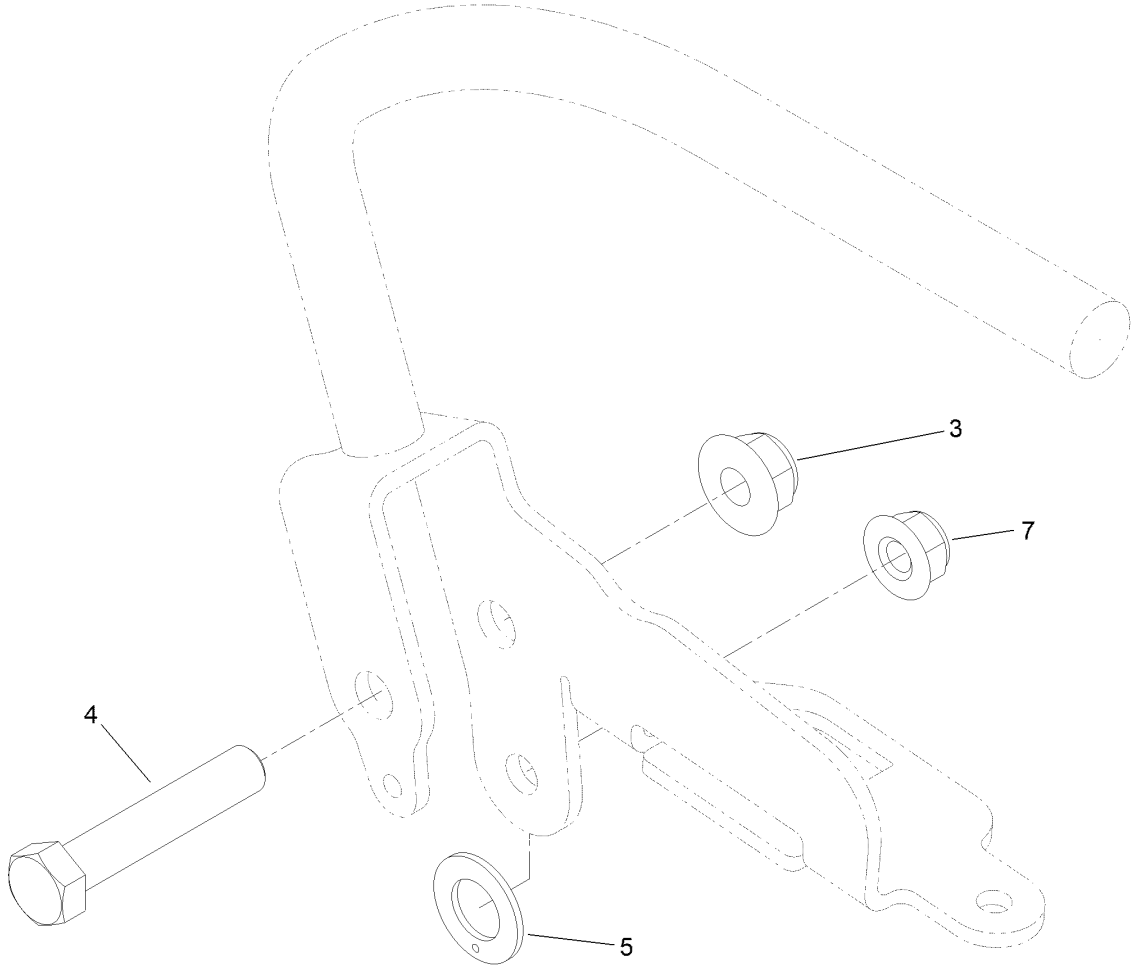

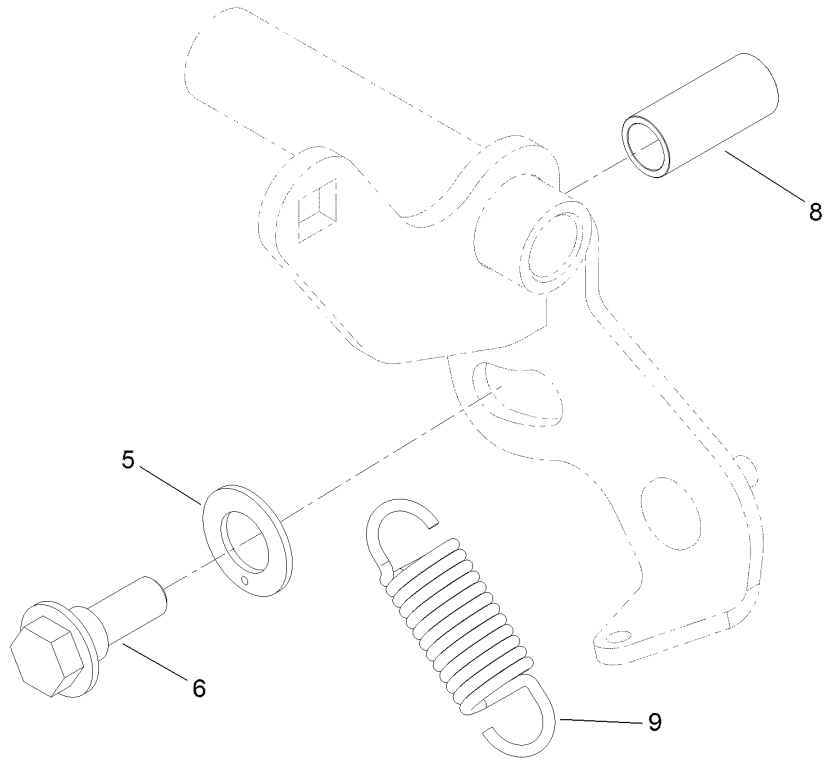

Control Handle Assembly No. 132-5158 (continued)

Ref.	Part Number	Qty.	Description
3	119-4042	1	Nut-HF, NI
4	323-10	1	Screw-HH
5	110-7191	2	Washer-Thrust
6	116-2670	1	Screw-Shoulder
7	119-4041	1	Nut-HF
8	131-3562	1	Bearing-Sleeve
9	132-5146	1	Spring-Extension

Parking Brake Assembly

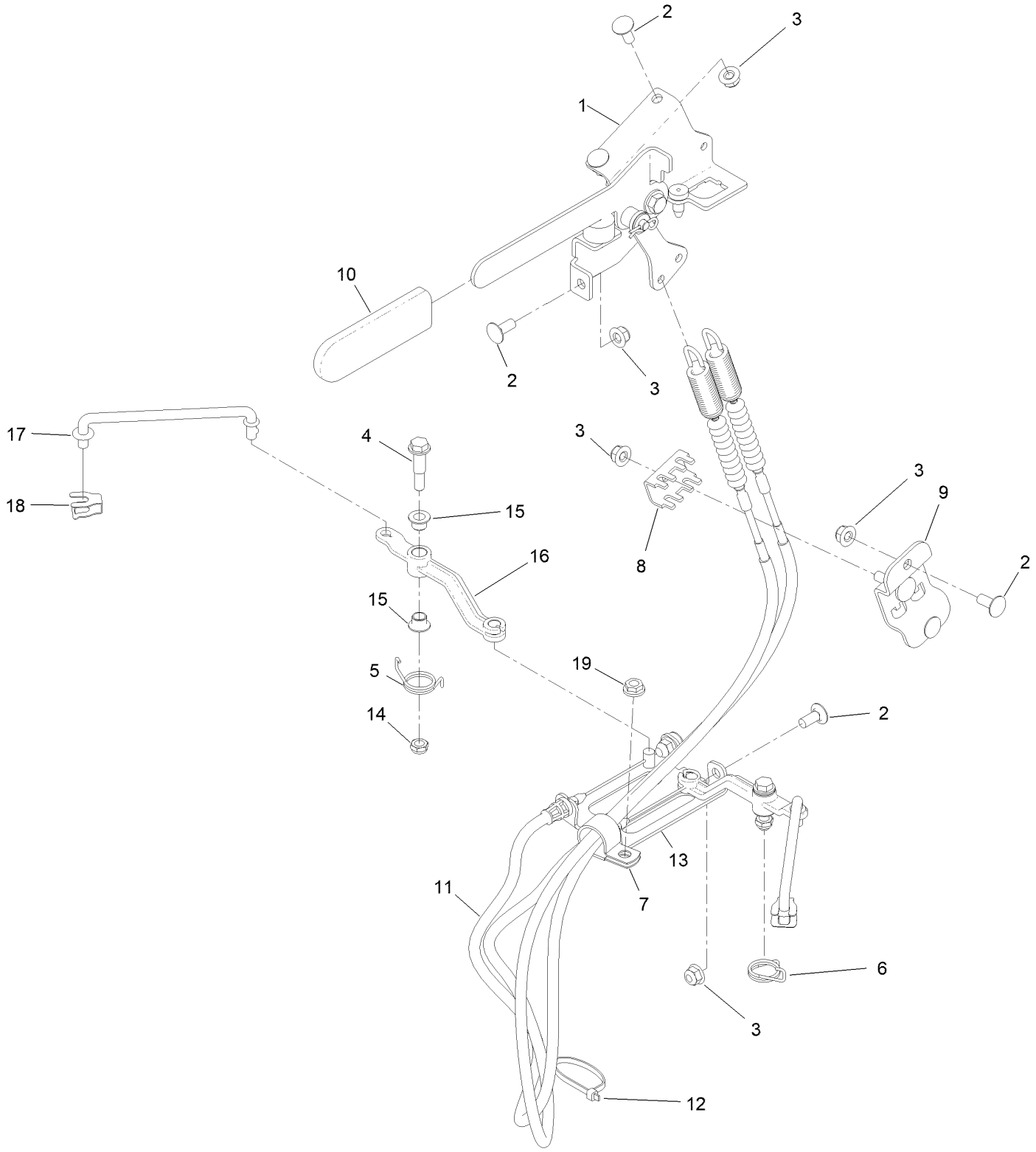

Parking Brake Assembly (continued)

Ref.	Part Number	Qty.	Description
1	132-5170	1	Brake Handle ASM
2	137-3061	7	Bolt-CARR
3	119-4041	8	Nut-HF
4	116-8607	2	Screw-Shoulder
5	139-1508	1	Spring-Torsion
6	139-1538	1	Spring-Torsion
7	2412-39	1	Clamp-R
8	132-1187	1	Clamp-Cable
9	132-7582	1	Mount-Cable, Brake
10	1-633268	1	Grip-Lever
11	145-1643	2	Cable-Brake
12	3290-378	1	Tie-Cable
13	147-3494	1	Bracket-Cable, Mount
14	3296-47	2	Nut-Lock,NI
15	137-2374	4	Bushing-Flange
16	147-4801	2	Arm-Brake
17	147-3484	2	Rod-Brake
18	147-4783	2	Retainer-Rod
19	32128-20	1	Nut-HF

Deck Lift Assembly

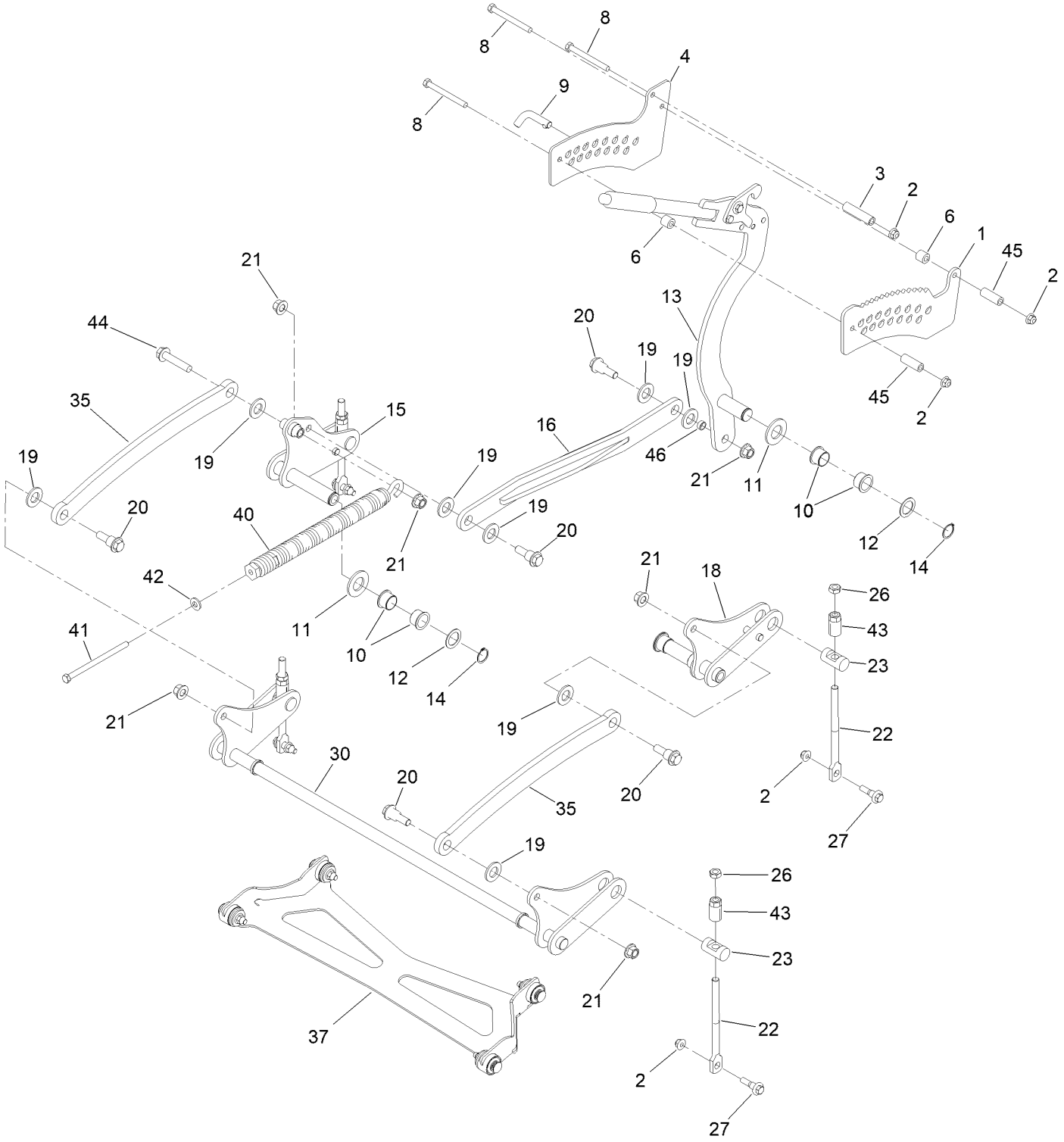

Deck Lift Assembly (continued)

Ref.	Part Number	Qty.	Description
1	138-4887	1	Plate-HOC, Inner
2	119-4042	7	Nut-HF, NI
3	138-1111	1	Spacer
4	132-7581	1	HOC Plate And Decal ASM
6	121-1760	2	Spacer
8	116-4701	3	Screw-HHF
9	116-5584	1	Pin-HOC
10	127-0369	6	Bushing
11	3256-62	3	Washer-Plain
12	10-8110	3	Washer-Thrust
13	161-6735	1	HOC Lever ASM
14	32151-29	3	Ring-Retaining
15	147-2441-03	1	RH Rear Lift Arm ASM [black]
16	147-4810-03	1	HOC Link ASM [black]
18	147-2446-03	1	LH Rear Lift Arm ASM [black]
19	3256-28	8	Washer-Flat
20	116-0780	5	Screw-Shoulder, HHF
21	139-1689	6	Nut-HF
22	147-4822	4	Link-Adjuster, Deck Lift
23	109-8353	4	Trunnion
26	3218-5	4	Nut-Jam
27	130-0742	4	Bolt-Shoulder
30	163-0503-03	1	Front Cross Shaft ASM [black]
35	127-1948-03	2	Link-Lift
37	147-4557	1	ASM-Deck Strut W/Bushings
40	116-0886	1	Spring-Extension
41	323-58	1	Bolt-TAP, HH
42	98-5975	1	Washer-Belleville
43	109-7840	4	Adjuster-Lift, Deck
44	127-7444	1	Screw-HHF
45	95-6448	2	Spacer
46	138-2235	1	Spacer

HOC Lever Assembly No. 161-6735

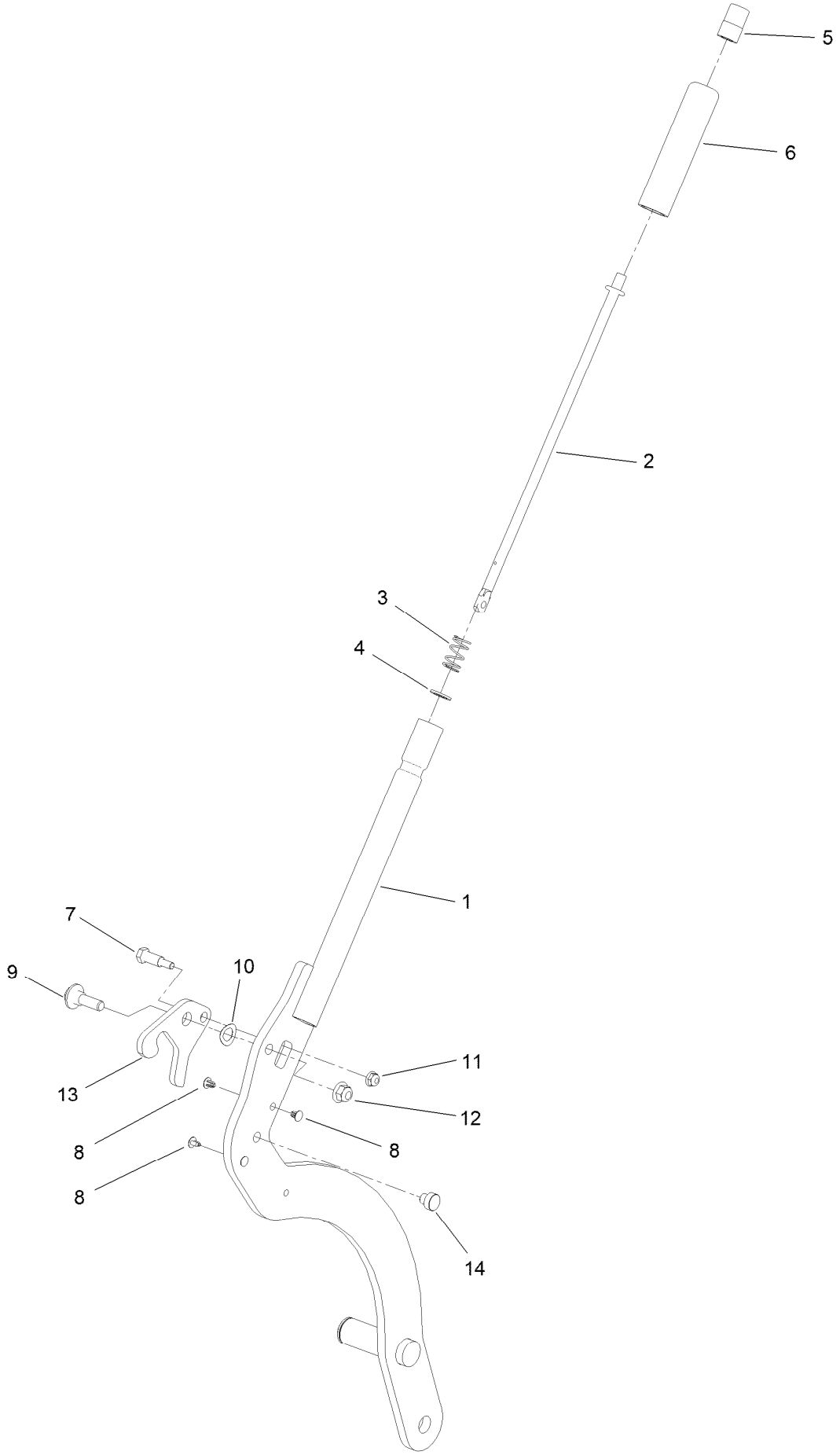

HOC Lever Assembly No. 161-6735 (continued)

Ref.	Part Number	Qty.	Description
1	161-6736-01	1	Lift Lever ASM [red]
2	136-0530	1	Rod-Latch, Release
3	114-8187	1	Spring-Compression
4	114-1207	1	Washer-Special
5	115-2750	1	Knob
6	115-3592	1	Grip
7	119-2309	1	Bolt-Shldr,HH
8	103-1363	4	Rivet
9	614672	1	Screw-Shoulder, HWH
10	110-8982	1	Washer-Spring
11	104-7201	1	Nut-HF, NI
12	119-4042	1	Nut-HF, NI
13	138-4888	1	Latch-HOC
14	138-4863	1	Plug-Wear

Deck Strut Assembly No. 147-4557

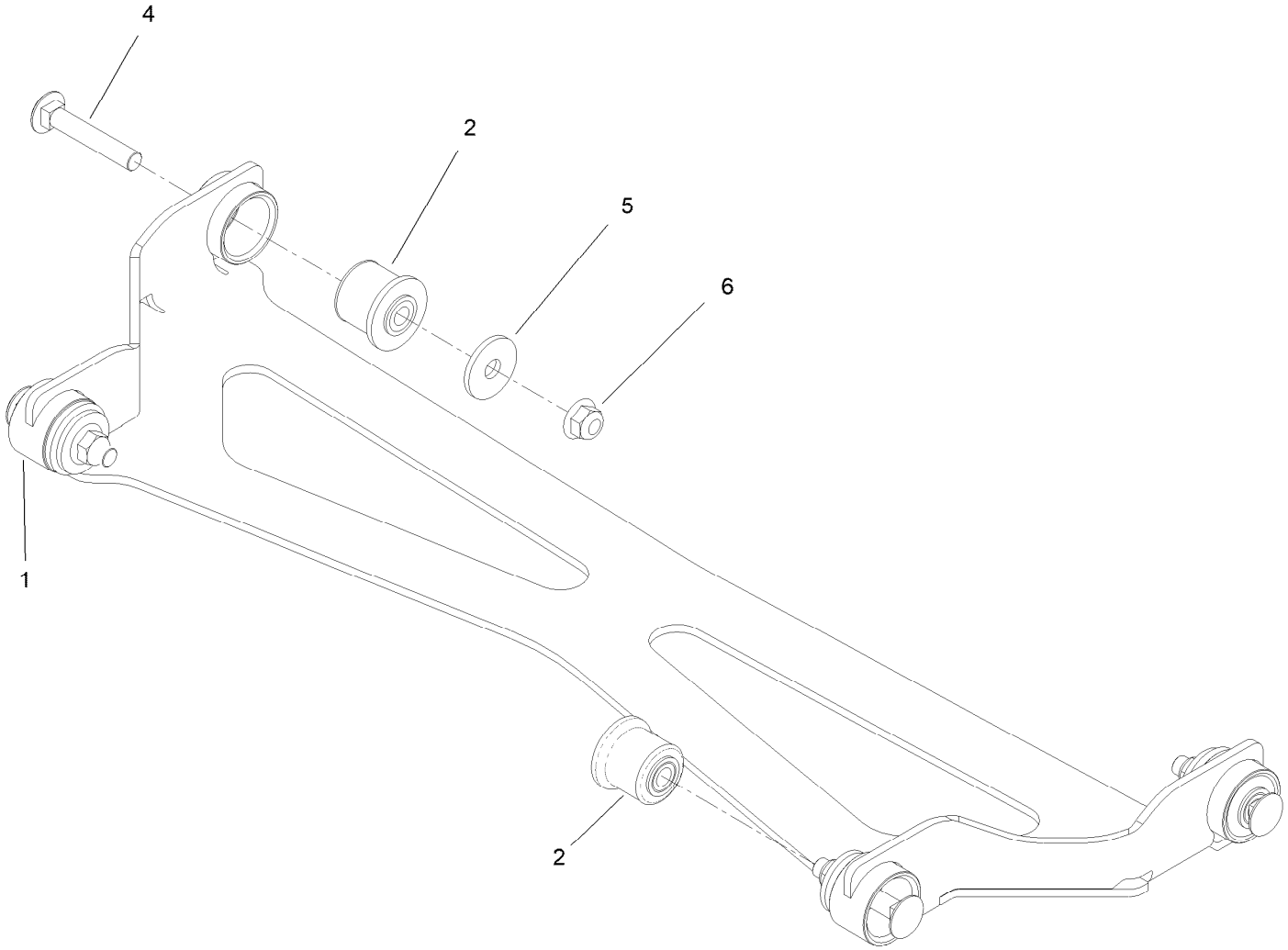

Deck Strut Assembly No. 147-4557 (continued)

Ref.	Part Number	Qty.	Description
1	147-4558-03	1	ASM-Deck Strut [black]
2	147-7351	4	Spacer, Bushing ASM
4	3231-7	4	Screw-CARR
5	2844	4	Washer
6	119-4042	4	Nut-HF, NI

Frame Assembly

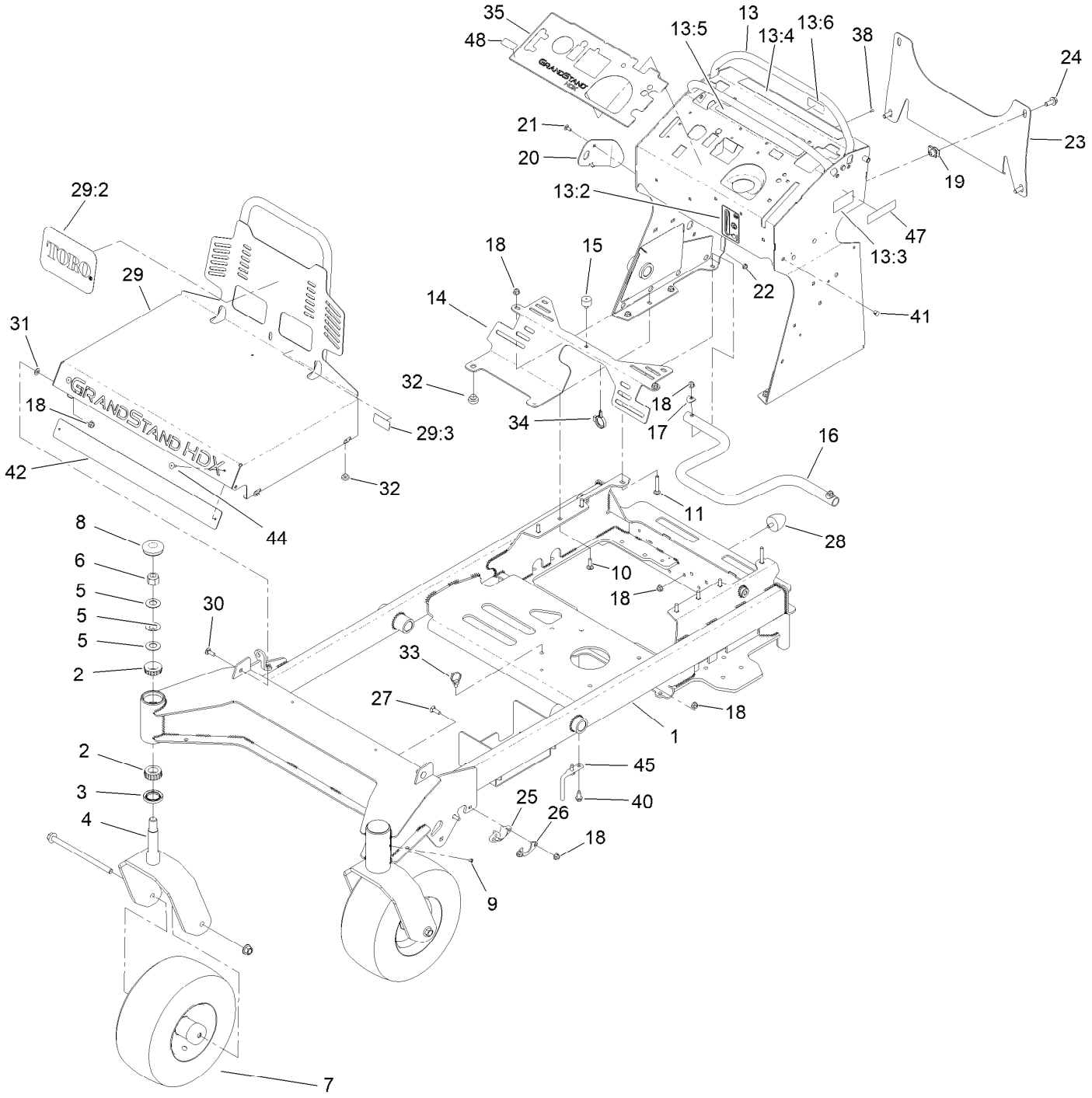

Frame Assembly (continued)

Ref.	Part Number	Qty.	Description
1	147-2432-01	1	Frame-60
2	1-543509	4	Bearing-Roller, Tapered
3	116-5647	2	Seal-Grease
4	142-9968-01	2	Caster-Fork
5	1-633508	6	Washer-Bellville
6	3296-51	2	Nut-Lock, NI
7	140-4896	2	Semi Pneumatic ASM 13X6.50-6
8	144-0375	2	Cap-Grease
9	1-811010	2	Plug
10	3230-2	6	Bolt-CARR
11	3230-6	2	Bolt-CARR
13	145-5163	1	Tower Decal ASM
13:2	147-7921	1	Decal-Oil Level
13:3	116-8775	1	Decal-Fill, Fuel
13:4	146-8696	1	Decal-Warning
13:5	131-3526	1	Decal-Controls
13:6	147-0212	1	Decal - Fuse
14	161-1339-01	1	Guard-Fan
15	120-7893	1	Bumper-Grommet
16	145-1586-01	1	Tube-Fuel Tank Mount
17	137-3009	2	Washer-Cup
18	119-4041	19	Nut-HF
19	105-4886	4	Nut-Tinnerman
20	147-4952	1	Plate-Striker
21	3229-11	1	Screw-CARR
22	104-7201	1	Nut-HF, NI
23	147-4771-05	1	Bracket-Cross
24	3234-42	4	Screw-HHF
25	139-5872	2	Bearing-Flange
26	116-2887	2	Gusset-Lift, Deck
27	3230-22	4	Screw-CARR
28	1-543963	3	Bumper-Rubber
29	163-4104	1	Engine Guard ASM W/Decals
29:2	104-7213	1	Decal
29:3	133-4641	1	Decal-Warning, No Riders
30	3230-10	2	Bolt-CARR
31	93-6079	2	Spacer-Nylon
32	1-513658	6	Bumper
33	32180-030	1	Clip-Tie
34	2412-39	1	Clamp-R
35	147-4764	1	Decal-Panel Control, Kawasaki
38	3290-271	2	Rivet-Pop
40	32144-70	3	Screw-HWHTF
41	104-9368	4	Plug-Dome
42	147-4805-01	1	Plate-Backing
44	130-8451	2	Rivet-Trifold
45	147-4825	1	Guide-Belt
47	133-8062	1	Decal-Spark Arrestor
48	132-0905	1	Decal-Shutdown, CE

Wheel and Bearing Assembly

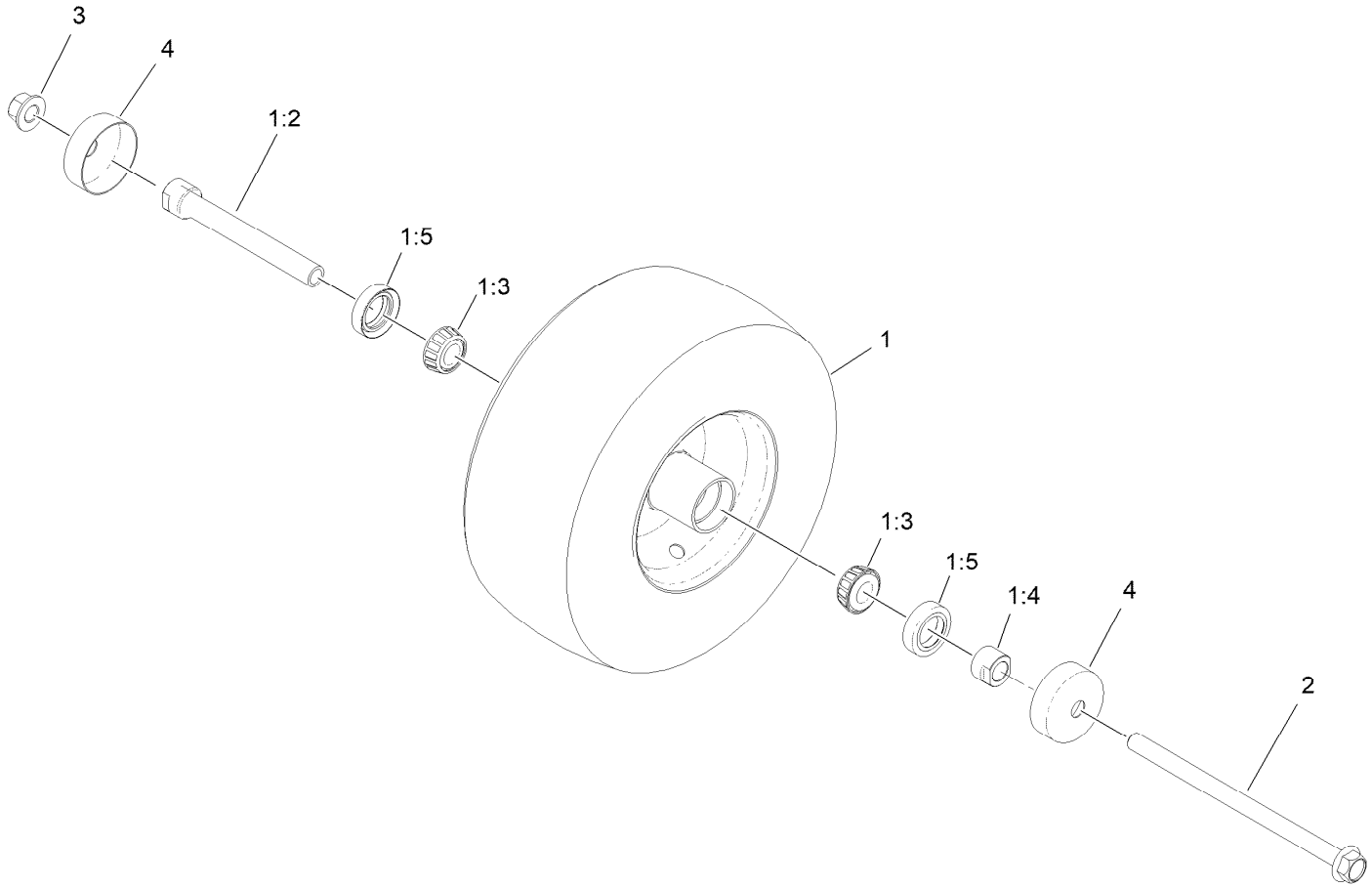

Wheel and Bearing Assembly (continued)

Ref.	Part Number	Qty.	Description
1		1	Wheel And Bearings ASM ●
1:2	126-7796	1	Caster Axle ASM
1:3	1-633585	2	Bearing-Cone, Taper
1:4	103-3051	1	Spacer-Nut
1:5	103-0063	2	Seal-Caster
2	126-5389	1	Screw-HHF
3	139-1689	1	Nut-HF
4	103-2768	2	Guard-Seal

● Not serviced separately

Platform Assembly

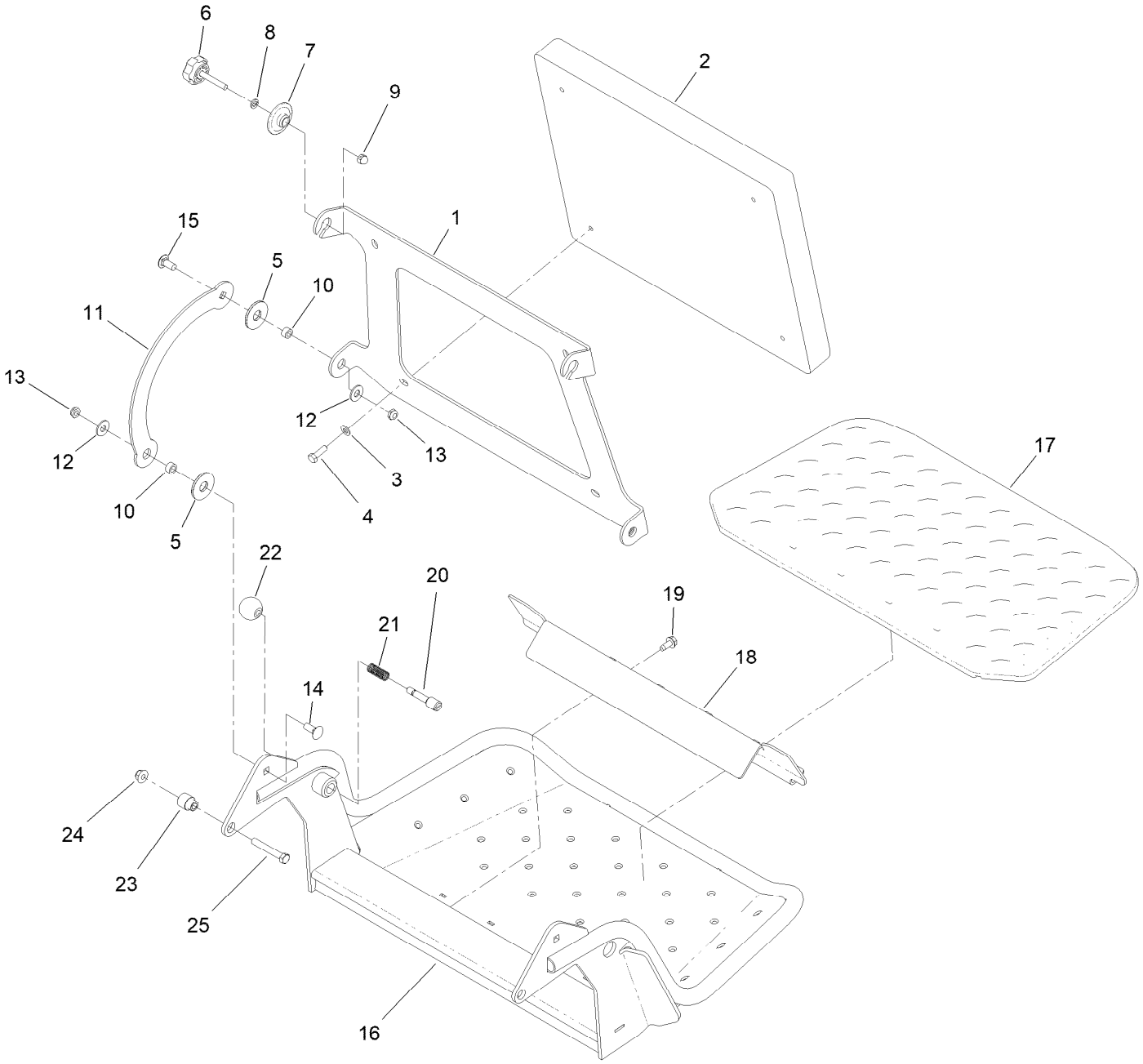

Platform Assembly (continued)

Ref.	Part Number	Qty.	Description
1	120-8499-05	1	Hinge-Pad
2	147-4839	1	Cushion-Pad
3	3256-23	4	Washer-Plain
4	121-7999	4	Screw-HH, Patch
5	114-0463	4	Washer-Friction, Composite
6	133-1426	2	Knob
7	116-2886	2	Slide-Bushing
8	3253-4	2	Washer-Lock
9	137-4808	2	Nut-Acorn
10	111044	4	Spacer
11	114-1915-01	2	Link-Pad
12	3256-4	4	Washer-Flat
13	3296-59	4	Nut-Lock, NI
14	3231-2	2	Bolt-CARR
15	3231-27	2	Screw-CARR
16	163-3498-01SP	1	Platform ASM
17	126-7157	1	Mat-Platform
18	161-6798	1	Shield Clamp Kit
19	32144-70	2	Screw-HWHTF
20	119-8650	1	Pin-Latch
21	114-5348	1	Spring
22	1-603175	1	Knob-Ball
23	132-7583	2	Bushing-Flanged
24	119-4042	2	Nut-HF, NI
25	323-47	2	Screw-HH

Engine Assembly

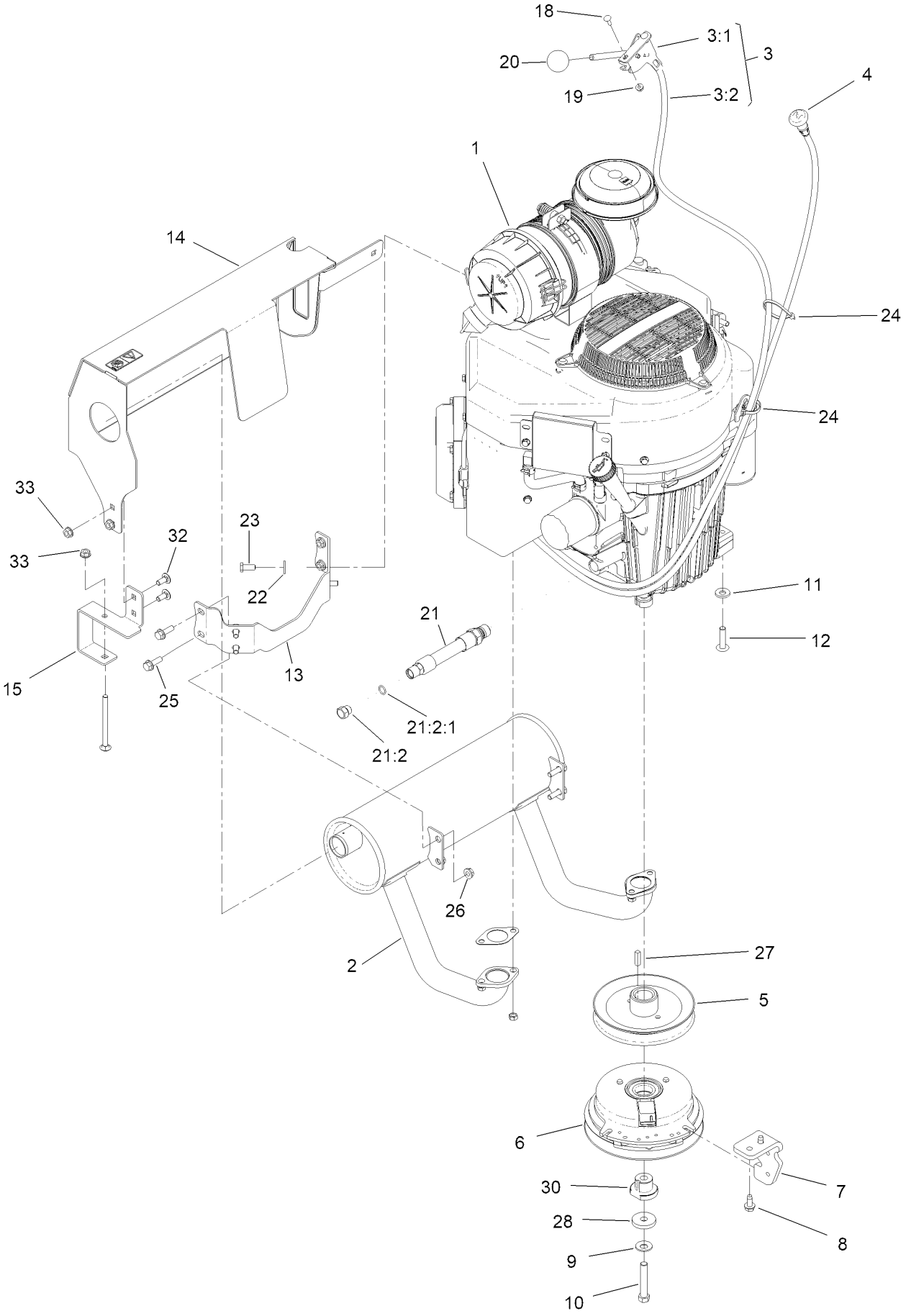

Engine Assembly (continued)

Ref.	Part Number	Qty.	Description
1		1	Engine Kawasaki Fx921V ■ ▲
1:1	KW10761	1	Filter-Oil Kaw ●
1:2	119-5944	1	Element-Filter, Air (Outer) ●
1:3	119-5945	1	Element-Filter, Air (Inner) ●
1:4	142-6949	1	Filter-Fuel ●
1:5	KW10676	2	Spark Plug ●
2	145-6192	1	Muffler, Kawi Fx921
3	145-1598	1	Throttle ASM
3:1	145-6187	1	Lever-Control
3:2	145-5189	1	Cable-Throttle
4	145-5188	1	Cable-Choke
5	145-6115	1	Pulley
6	139-7910	1	Clutch-200Cms
7	147-0345-05	1	Bracket, Clutch Stop
8	32144-70	2	Screw-HWHTF
9	1-603610	1	Washer-Spring
10	3212-10	1	Screw-HH
11	98-5975	4	Washer-Belleville
12	126-0983	4	Screw-BHTF
13	147-4556	1	Bracket-Muffler

Ref.	Part Number	Qty.	Description
14	146-8503	1	ASM-Muffler Guard HDX Kawi
15	146-8438-05	1	Bracket-Muffler Guard HDX Kawi
18	1-807533	2	Bolt-CARR
19	32128-17	2	Nut-Lock, Flange
20	1-603175	1	Knob-Ball
21	133-4659	1	Hose ASM
21:2	353-508	1	Plug-HH
21:2:1	237-42	1	O-Ring
22	1-303334	4	Washer-Spring
23	33114-020	4	Screw-HH
24	3290-378	2	Tie-Cable
25	3234-17	4	Screw-HHF
26	32128-20	4	Nut-HF
27	1-807259	1	Key
28	1-543610	1	Washer-Flat
30	147-4838	1	Spacer, D-Drive
32	137-3061	2	Bolt-CARR
33	32128-25	2	Nut-HF

● Not illustrated
▲ Obtain parts from www.kawpower.com

■ Not serviced separately

Muffler Guard Assembly No. 146-8503

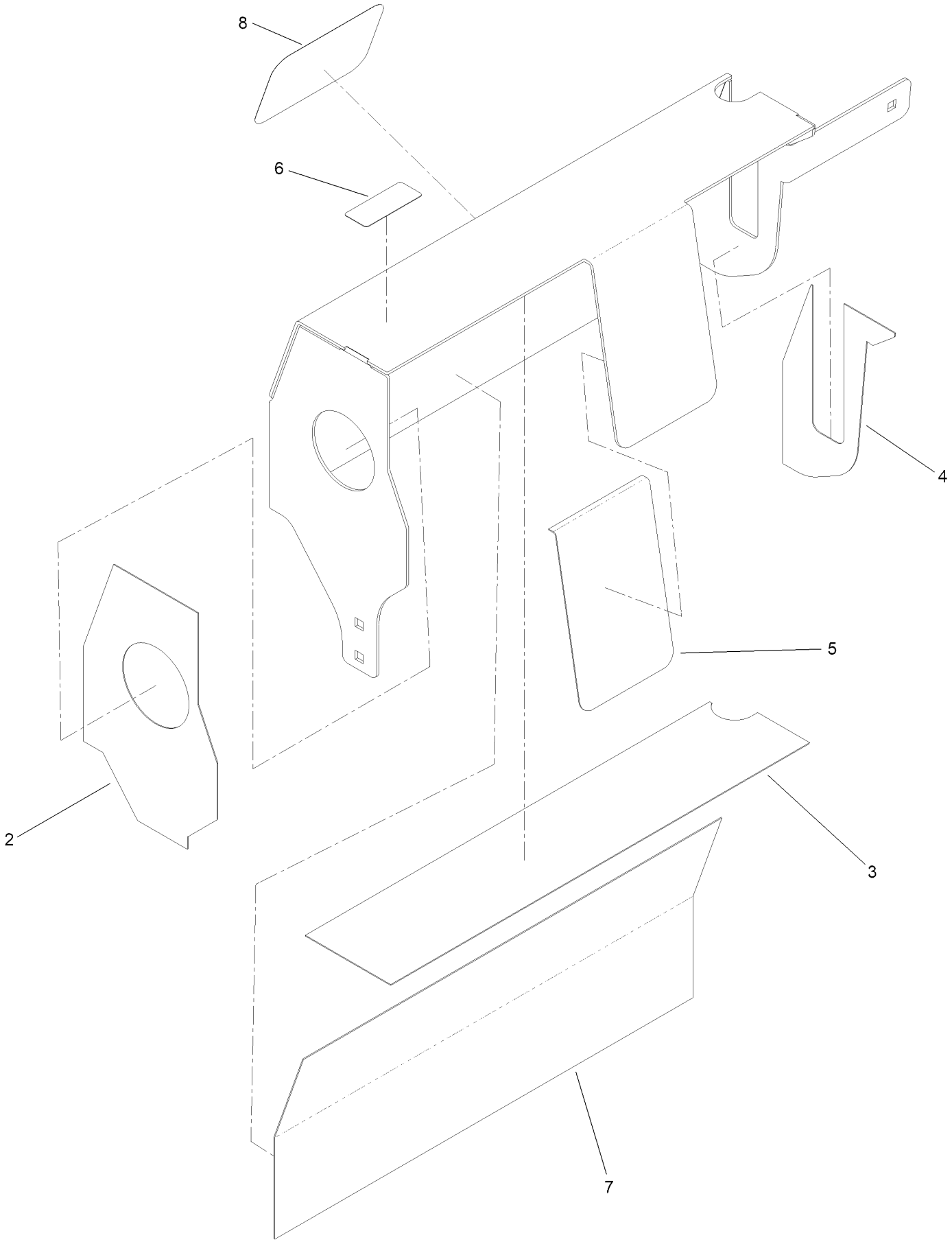

Muffler Guard Assembly No. 146-8503 (continued)

Ref.	Part Number	Qty.	Description
2	146-8501	1	Shield-Insulation
3	146-8502	1	Shield-Insulation
4	146-8505	1	Shield-Insulation
5	146-8504	1	Shield-Insulation
6	127-0392	1	Decal-Hot Surface
7	146-8693	1	Shield-Insulation
8	94-2579	1	Decal

Fuel Tank Assembly

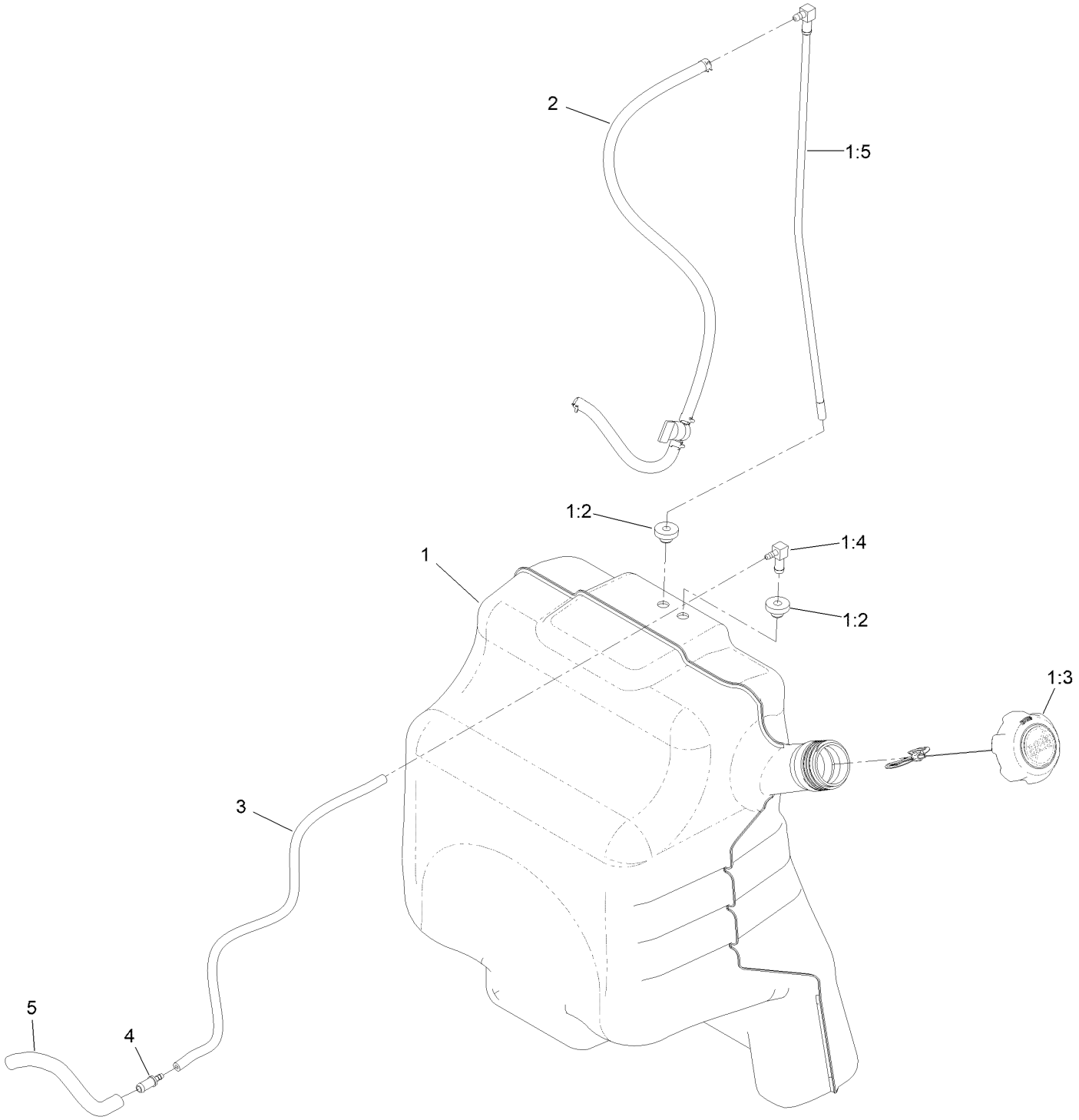

Fuel Tank Assembly (continued)

Ref.	Part Number	Qty.	Description
1	132-7560	1	Fuel Tank ASM
1:2	46-6560	2	Bushing
1:3	137-4127	1	Cap-Fuel
1:4	104-5228	1	Fitting-Elbow, 90 DEG
1:5	145-6195	1	ASM, Tube-Fuel

Ref.	Part Number	Qty.	Description
2	145-6123	1	Fuel Line ASM
3	110-8255	1	Hose-Fuel
4	98-2952	1	Fitting-Straight
5	132-7576	1	Hose-Fuel

Electrical Assembly

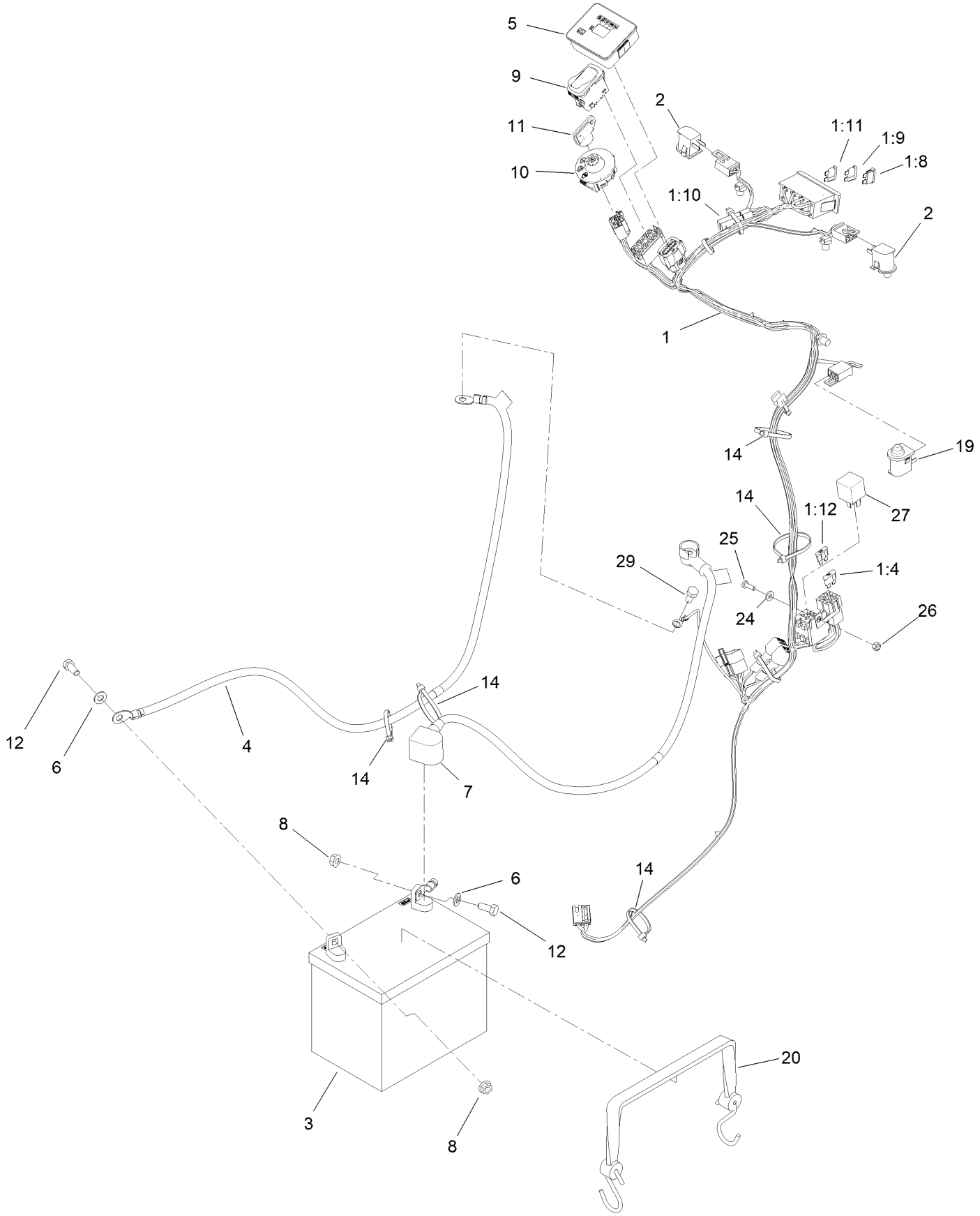

Electrical Assembly (continued)

Ref.	Part Number	Qty.	Description
1	145-5228	1	Harness-Wire, Grandstand
1:4	109101	1	Fuse-Blade, 20 Amp
1:8	109355	2	Fuse-Blade, 15 Amp
1:9	218-578	1	Fuse-Blade, 10 Amp
1:10	116-0053	2	Cap-Plug
1:11	110928	1	Fuse-Blade, 5 Amp
1:12	109103	1	Fuse-Blade, 30 Amp
2	82-2190	2	Switch-Bail
3	104-8162	1	Battery
4	147-4797	1	Battery-Cable, Bk ASM
5	140-1884	1	Module-Meter, Hour
6	3256-23	2	Washer-Plain
7	147-4794	1	Battery-Cable, Rd ASM

Ref.	Part Number	Qty.	Description
8	109-5715	2	Nut-HHF, Smooth
9	139-6367	1	Switch-Rocker, (On)-On-Off
10	137-4101	1	Switch-Ignition
11	63-8360	1	Key-Ignition
12	322-3	2	Screw-HH
14	3290-378	5	Tie-Cable
19	133-4654	1	Switch-Plunger
20	139-2381	1	Strap-Rubber
24	3256-14	1	Washer-Flat
25	3290-500	1	Screw-PPH
26	3296-2	1	Nut-Lock, NI
27	1-643275	1	Relay
29	33114-016	1	Screw-HH

Attachments and Accessories

For 72510 — GrandStand HDX Mower With 60in TURBO FORCE Cutting Unit

Product Name	Model/Part
HYPR-OIL 500 (quart)	114-4713
HYPR-OIL 500 (gallon)	114-4714
HYPR-OIL 500-5 (5 gallon)	114-4715
Harness Wire Splitter	121-5988
Toro Premium Fuel Treatment 12oz Bottle	131-6572
Speed Setting Tool	132-7595
Chute Gate Kit W/ Bag	133-1434
Trash Bag Assembly	133-1435
Light Kit	133-1437
HOC Set Blocks	133-1439
Hydro Oil Change Kit	133-1457
Strobe Light Kit	133-1495
5 Gallon Bucket	133-2533
Hydraulic Cap Lock Kit	136-5420
Bucket Mount Kit	136-5681
Tweel-Turf Tire	139-3649
Recycler Kit	139-6655
Blade-20.5 High Flow	140-1240
Blade-20.50 Atomic	140-1241
Blade-20.50 Medium Flow	140-4853
Blade-20.50, Low Flow	140-4854
Blade-20.50 Recycler	140-4855
6 Pack-Blade, 20.5 High Flow	140-4877
6 Pack-Blade, 20.5 Med Flow	140-4878
6 Pack-Blade, 20.5 Low Flow	140-4879
6 Pack-Blade, 20.5 Atomic	140-4880
6 Pack-Blade, 20.5 Recycler	140-4881
2 Transmission Filter Kit	144-3842
Spark Arrestor, 1.5in	146-0561
13x6.5n6 Caster Tweel Asm	147-6294
10W30 4-Cycle Engine Oil (32oz Bottle)	38280
Toro 4-Cycle SAE 30 Oil (32oz Bottle)	38903

Notes:

Notes:

Notes:

TORO®

Count on it.