Form No. 3461-257 Rev C

TORO®

Count on it.

Parts Catalog

Workman® GTX

Lithium Utility Vehicle

Model No. 07433TC—Serial No. 400000000 and Up

Register at www.Toro.com.
Original Instructions (EN)

CE

3461-257 C

Ordering Replacement Parts

To order replacement parts, please supply the part number, the quantity, and the description of each part desired.

Understanding Reference Numbers

Each identified part in an illustration has a reference number. The reference number for a part also appears in the parts list, along with other information about the part.

This catalog uses two special reference number formats, one to indicate parts in a service assembly and another to indicate the quantity of a given part in an illustration.

Service Assembly Reference Numbers

Parts in service assemblies have reference numbers in the form a:b. The a represents the reference number of the entire service assembly and the b represents a sequential number unique to each part within the service assembly.

For example, a wheel assembly might be identified by reference number 6, the tire by 6:1, the valve by 6:2, and the wheel by 6:3. When you order the assembly identified by reference number 6, you receive all parts identified by reference numbers 6:1,6:2, and 6:3. However, you may also order any part individually. Reference numbers of this type appear in illustration and in parts lists.

Reference Numbers Indicating Quantity

In an illustration, if a reference number indicates more than one part, the reference number has the form nX y. The n represents the quantity of the part, the X is the multiplication symbol, and the y represents the reference number.

For example, in an illustration, the reference number 2X 37 means that two of the parts identified by reference number 37 are indicated.

Contents

Front Frame and Suspension Assembly 4
Floor Plate and Rear Suspension Mount Assembly 5
Rear Frame and Suspension Assembly 6
Frame Mount and Rear Shock/Spring Assembly 7
Brake Assembly 8
Master Cylinder Assembly No. 104-6782 9
Brake Caliper Assembly No. 140-2575 10
Steering Assembly 11
Pedal and Control Assembly 12
Hood and Fender Assembly 13
Dash Assembly 14
Seatbase Assembly 15
Cargo Bed Assembly 16
Onboard Charger Assembly 17
Inverter/Controller Assembly 18
Wire Harness Assembly No. 122-2325 19
Accelerator Pedal and Horn Assembly 20
Battery Assembly 21
Rear Wheel and Transaxle Assembly 22
Transaxle Assembly No. 136-6340 23
Electric Motor Assembly No. 137-6936 24
Seatbase Assembly 26
Attachments and Accessories 27

© 2026—The Toro® Company
8111 Lyndale Avenue South
Bloomington, MN 55420

Contact us at www.Toro.com.
Printed in the USA.
All Rights Reserved

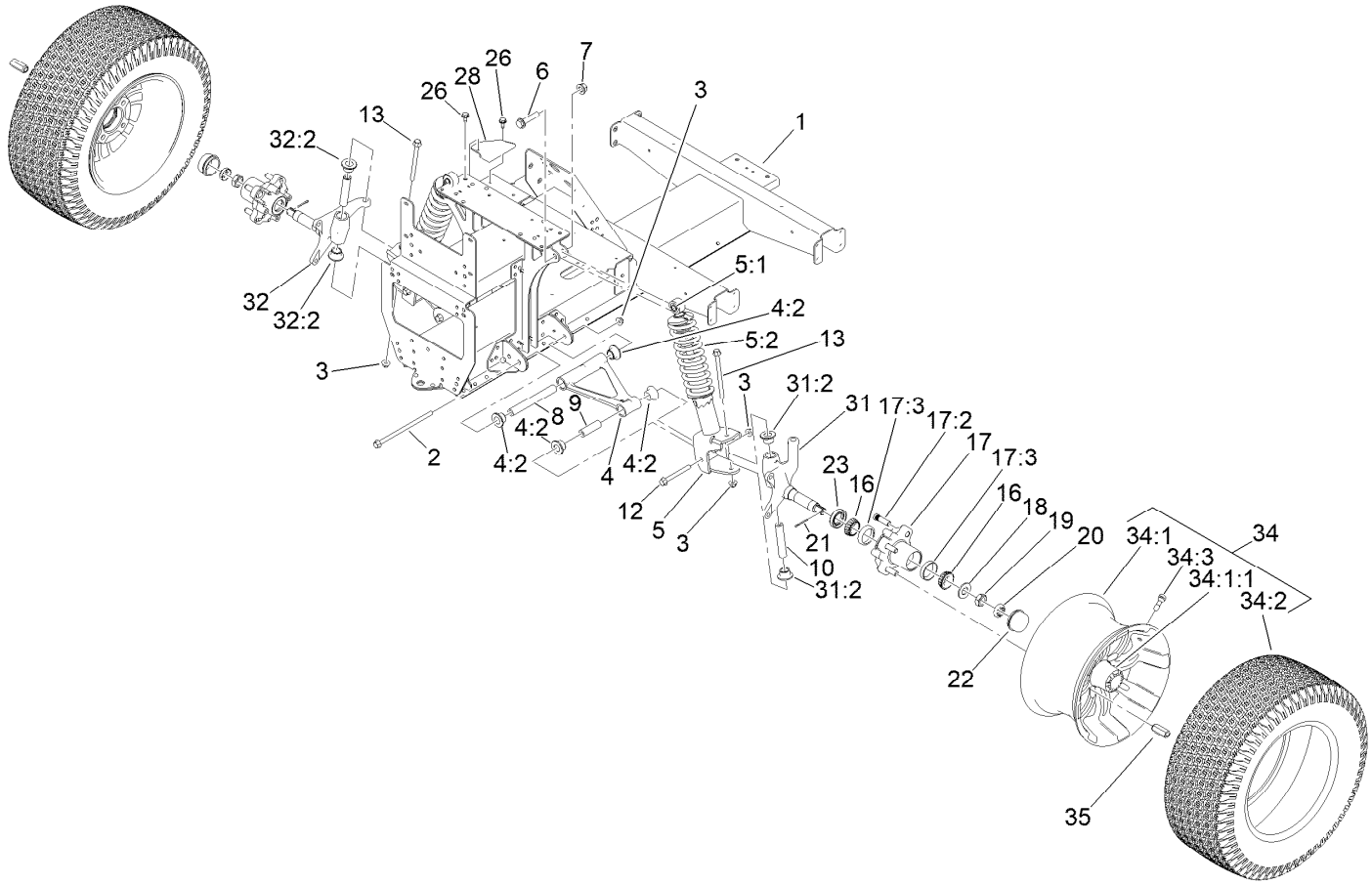

Front Frame and Suspension Assembly

Ref.	Part Number	Qty.	Description
1	147-8209-03	1	Front Frame ASM
2	139-3360	2	Screw-HF
3	139-3380	6	Nut-HF
4	144-2161	2	Control Arm ASM
4:2	140-4615	4	Bushing-Flange
5	139-4484	2	Strut ASM, 250 Lb (16.33" EXT Length)
5:1	131-8574	1	Isolator-Shock
5:2	137-6719	1	Spring-Compression, 250Lb
6	3234-46	2	Screw-HHF
7	99-5107	2	Nut-HF Nylock
8	131-8581	2	Sleeve-Control Arm, Inner
9	131-8583	2	Sleeve-Control Arm, Outer
10	131-8582	2	Sleeve-Kingpin
12	139-3370	2	Screw-HF
13	139-3350	2	Screw-HF
16	254-94	4	Bearing-Cone, Tapered
17	127-8851	2	Front Hub ASM
17:2	10-6830	4	Stud-Type, Drive

Ref.	Part Number	Qty.	Description
17:3	254-72	2	Bearing-Cup, Tapered
18	93-0309	2	Washer-Tab
19	3220-7	2	Nut-Jam
20	93-0307	2	Nut-Lock, Retainer
21	3272-12	2	Pin-Cotter
22	241-119	2	Cap-Dust
23	112-1690	2	Seal-Oil
26	32144-70	2	Screw-HWHTF
28	131-8339-03	1	Reinforcement-Tower
31	147-2830	1	Spindle ASM, LH
31:2	140-4615	2	Bushing-Flange
32	147-2840	1	Spindle ASM, RH
32:2	140-4615	2	Bushing-Flange
34	147-2763	2	Al Wheel And Tire ASM
34:1	147-2764	1	Wheel-Aluminum
34:1:1	147-2839	1	Cap-Aluminum Wheel
34:2	120-3271	1	Tire
34:3	232-27	1	Stem-Valve
35	139-3603	8	Nut-Lug

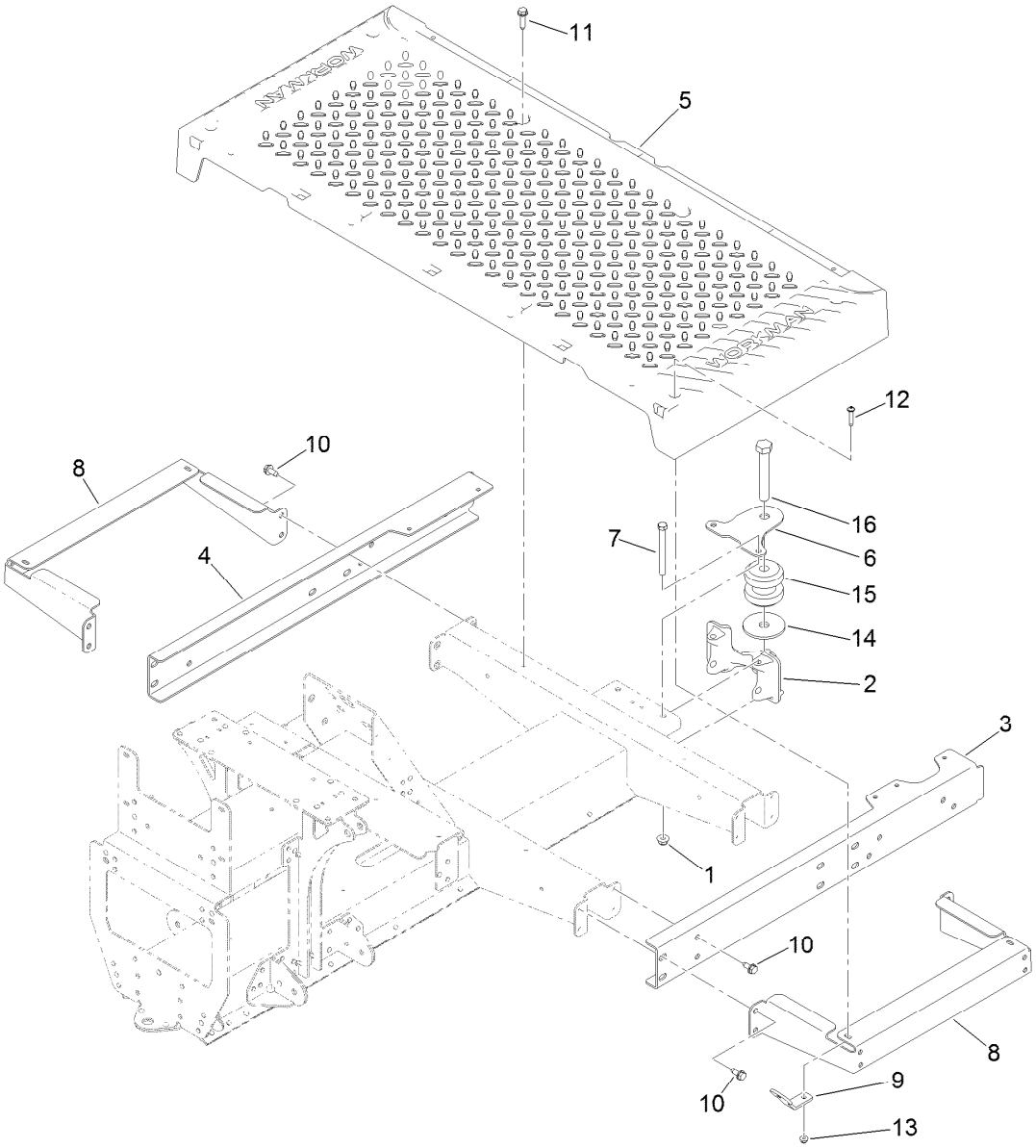

Floor Plate and Rear Suspension Mount Assembly

Ref.	Part Number	Qty.	Description
1	104-8301	2	Nut-HF, NI
2	131-8466	1	Mount-Suspension, Rear
3	127-7820-03	1	Channel-Frame, Front (LH)
4	127-7821-03	1	Channel-Frame, Front (RH)
5	127-7829	1	Plate-Floor
6	131-8597	1	Plate-Gimbal, Upper
7	323-42	2	Screw-HH
8	127-7837-03	2	Bracket-Support, Floor Plate

Ref.	Part Number	Qty.	Description
9	127-7832	2	Bracket-Angle
10	32144-70	16	Screw-HWHTF
11	32144-49	4	Screw-HWHTF
12	132-6777	4	Screw-Twh Thd Roll
13	104-7201	4	Nut-HF, NI
14	110-4549	1	Washer-Snubbing
15	131-8480	1	Isolator
16	104-5877	1	Screw-HH

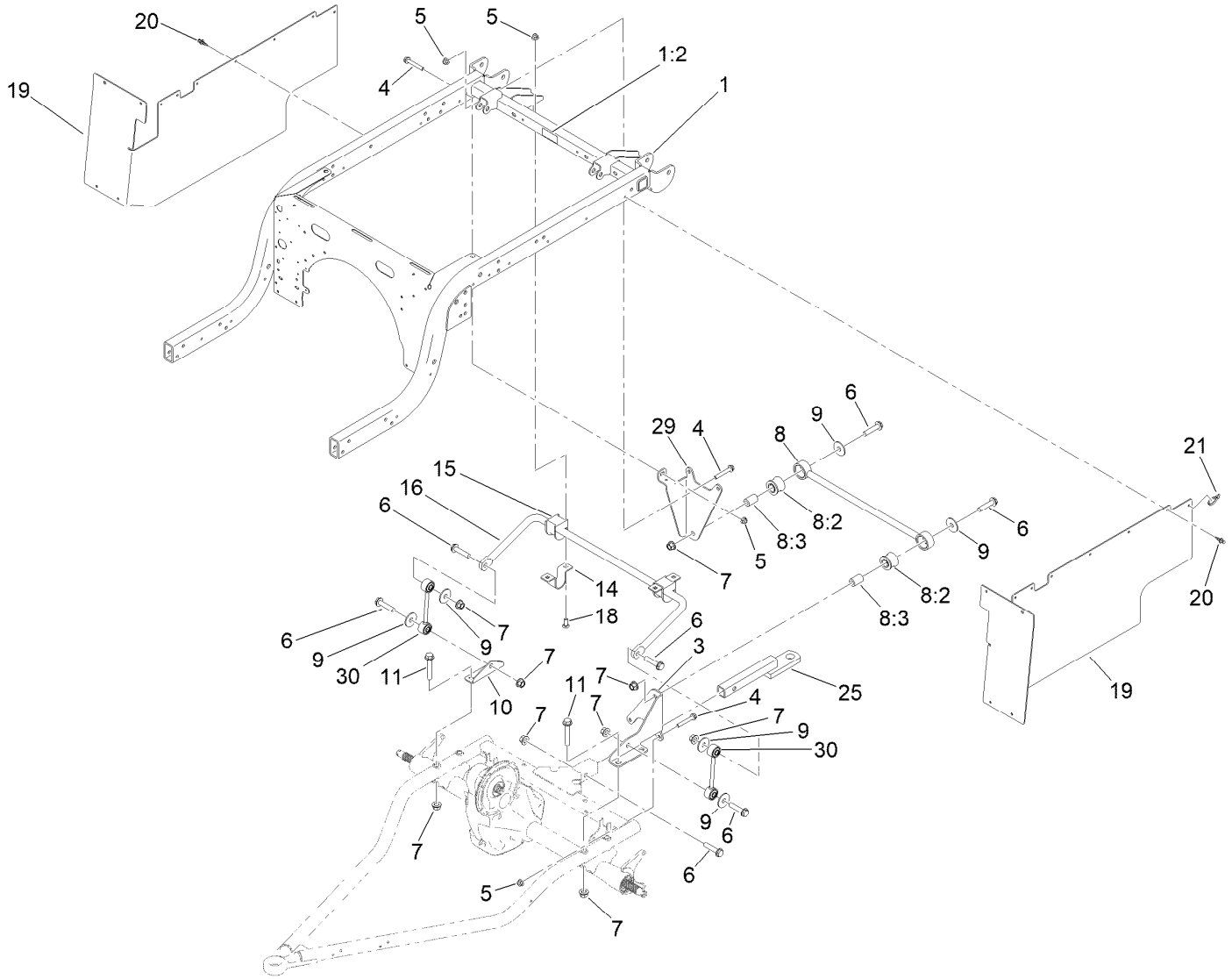

Rear Frame and Suspension Assembly

Ref.	Part Number	Qty.	Description
1	140-2498	1	Rear Frame ASM
1:2	115-2047	1	Decal-Surface, Hot
3	127-7411-03	1	Bracket-Bar, Stabilizer
4	3234-39	5	Screw-HHF
5	104-8301	9	Nut-HF, NI
6	3234-46	7	Screw-HHF
7	99-5107	11	Nut-HF Nylock
8	109-5013	1	Panhard Rod ASM
8:2	109-5009	2	Bushing-Suspension, Rubber
8:3	109-5010	2	Spacer
9	86-1990	6	Washer
10	131-8315	1	Bracket-Link, Sway Bar
11	3234-40	4	Screw-HF
14	139-4644	2	Clamp, Anti-Sway Bar
15	87-3910	2	Bushing-Rubber
16	131-8310-03	1	Bar-Sway, Anti
18	3231-22	4	Screw-CARR
19	131-8346	2	Panel-Side
20	125-9622	20	Rivet-Blind
21	3290-378	2	Tie-Cable
25	137-6741	1	Ball Mount ASM
29	139-4648-03	1	Bracket-Stabilizer Bar [black]
30	139-4606	2	Link ASM-Sway Bar

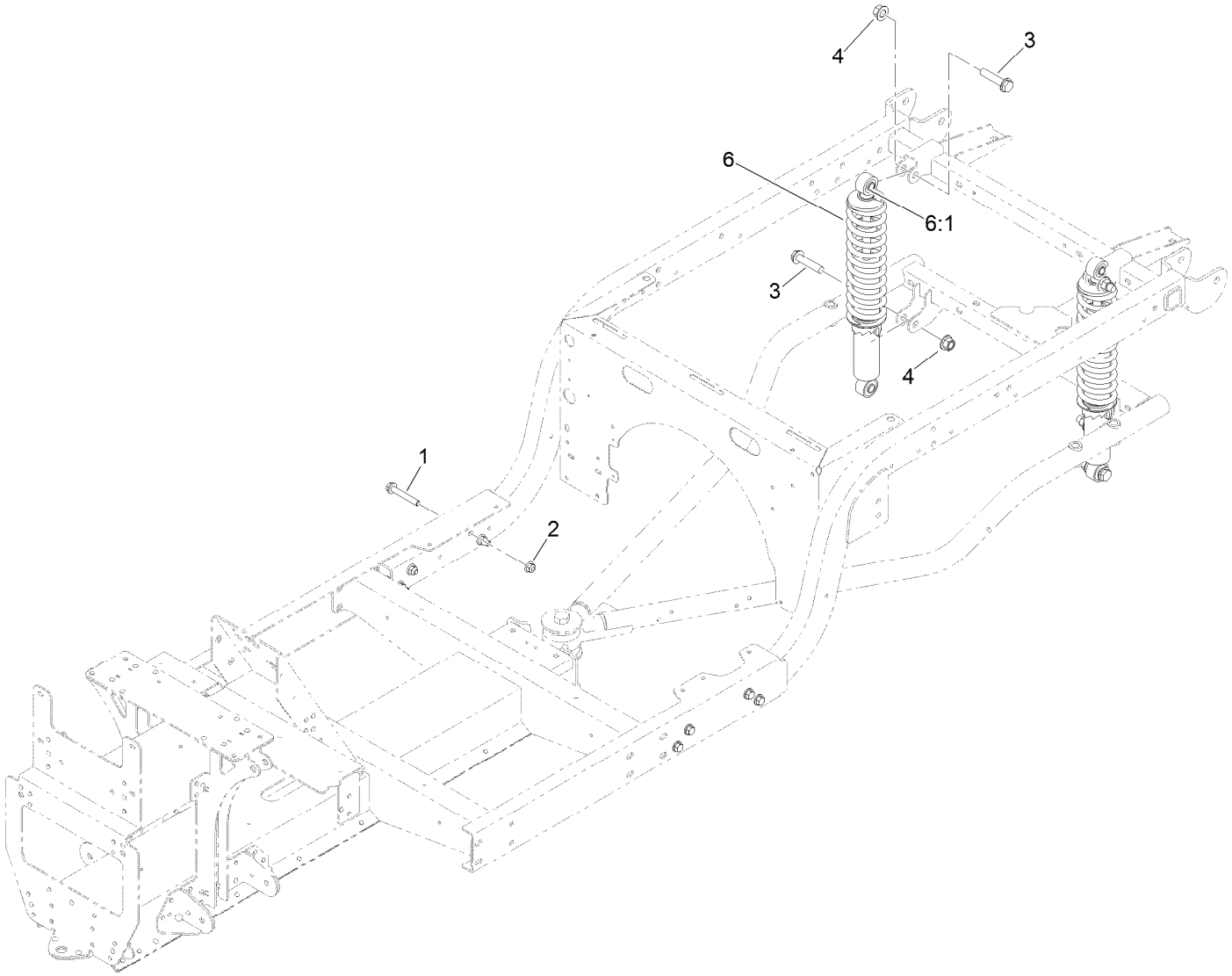

Frame Mount and Rear Shock/Spring Assembly

Ref.	*Part Number*	*Qty.*	*Description*
1	3234-39	8	Screw-HHF
2	104-8301	8	Nut-HF, NI
3	3234-46	4	Screw-HHF
4	99-5107	4	Nut-HF Nylock
6	139-4608	2	Shock/Spring ASM
6:1	131-8574	2	Isolator-Shock

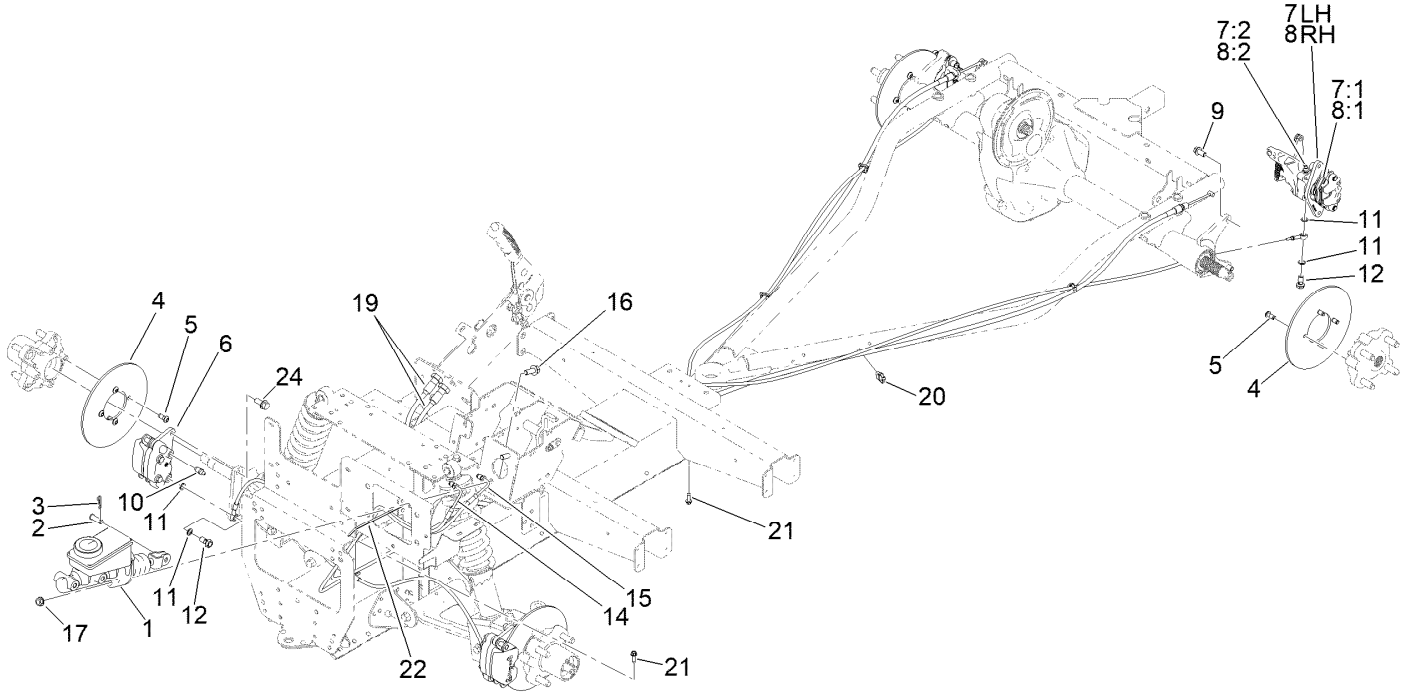

Brake Assembly

Ref.	Part Number	Qty.	Description
1	104-6782	1	Master Cylinder ASM
2	283-2	1	Pin-Clevis
3	1-806003	1	Pin-Cotter
4	139-4474	4	Rotor-Brake
5	121-9671	16	Screw-HSBH,Patch
6	140-2575	2	Brake Caliper ASM
7	140-2585	1	Brake Caliper ASM, LH
7:1	140-2595	1	Brake Pad Service Kit (Rear, Qty 4)
7:2	119-9509	1	Screw-Bleed
7:3	136-6328	2	Spring-Rattle, Anti ●
8	140-2590	1	Brake Caliper ASM, RH
8:1	140-2595	1	Brake Pad Service Kit (Rear, Qty 4)
8:2	119-9509	1	Screw-Bleed
8:3	136-6328	2	Spring-Rattle, Anti ●
9	144-5550	4	Screw-Spl
10	119-9509	2	Screw-Bleed
11	115-2341	8	Washer-Banjo
12	120-4875	4	Bolt-Flange, Banjo
14	127-7781	1	Brake Line-Front
15	127-7782	1	Brake Line-Rear
16	3234-11	2	Screw-HHF
17	3290-357	2	Nut-HSF
19	131-8406	2	Cable-Park Brake
20	32180-030	4	Clip-Tie
21	49-2040	2	Screw-HWHTF
22	3290-378	1	Tie-Cable
24	3234-25	4	Screw-HHF

● Not illustrated

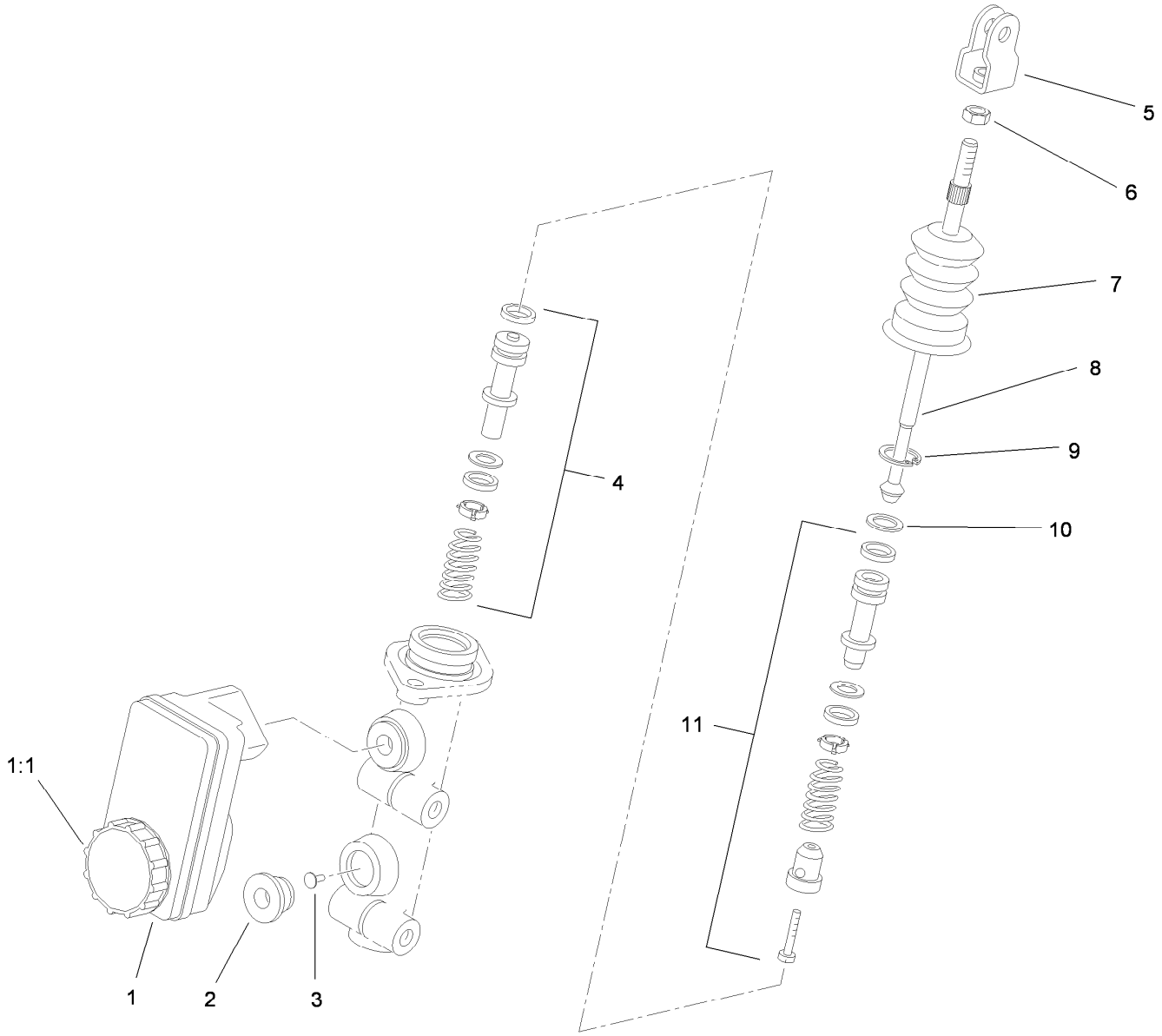

Master Cylinder Assembly No. 104-6782

Ref.	*Part Number*	*Qty.*	*Description*
1	104-6845	1	Reservoir ASM
1:1	92-4112	1	Cap ASM
2	93-8971	2	Seal-Port, Flange
3	92-4103	1	Pin-Stop
4	92-4102	1	Secondary Piston ASM
5	92-4110	1	Clevis
6	21-0360	1	Nut-Hex
7	94-5209	1	Cover-Dust
8	94-5210	1	Rod-Push
9	92-4109	1	Ring-Snap
10	92-4108	1	Retainer-Washer
11	92-4101	1	Primary Piston ASM

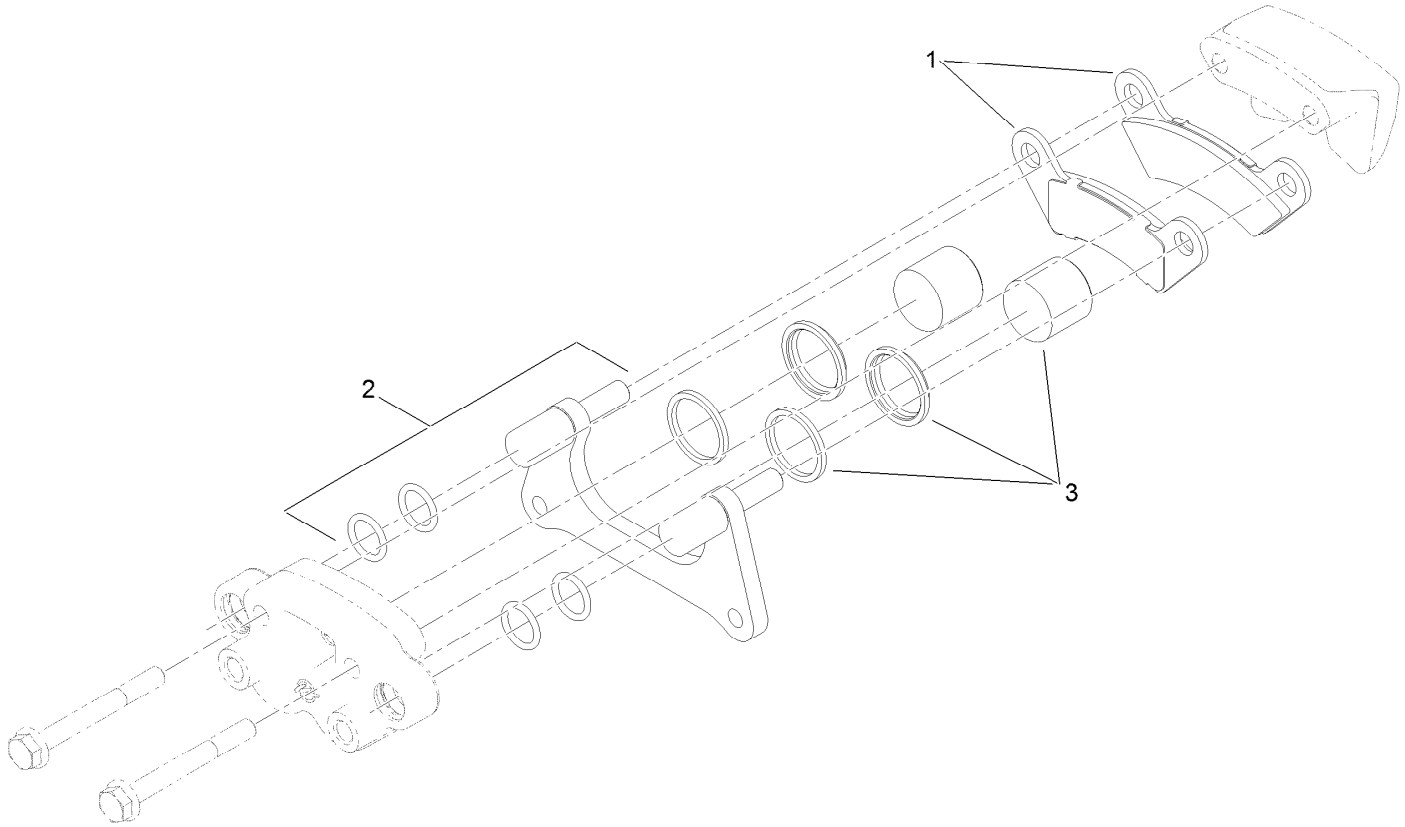

Brake Caliper Assembly No. 140-2575

Ref.	*Part Number*	*Qty.*	*Description*
1	140-2580	1	Brake Pad Service Kit (Front, Qty 4)
2	119-9511	1	Bracket Kit
3	133-0614	1	Piston Kit

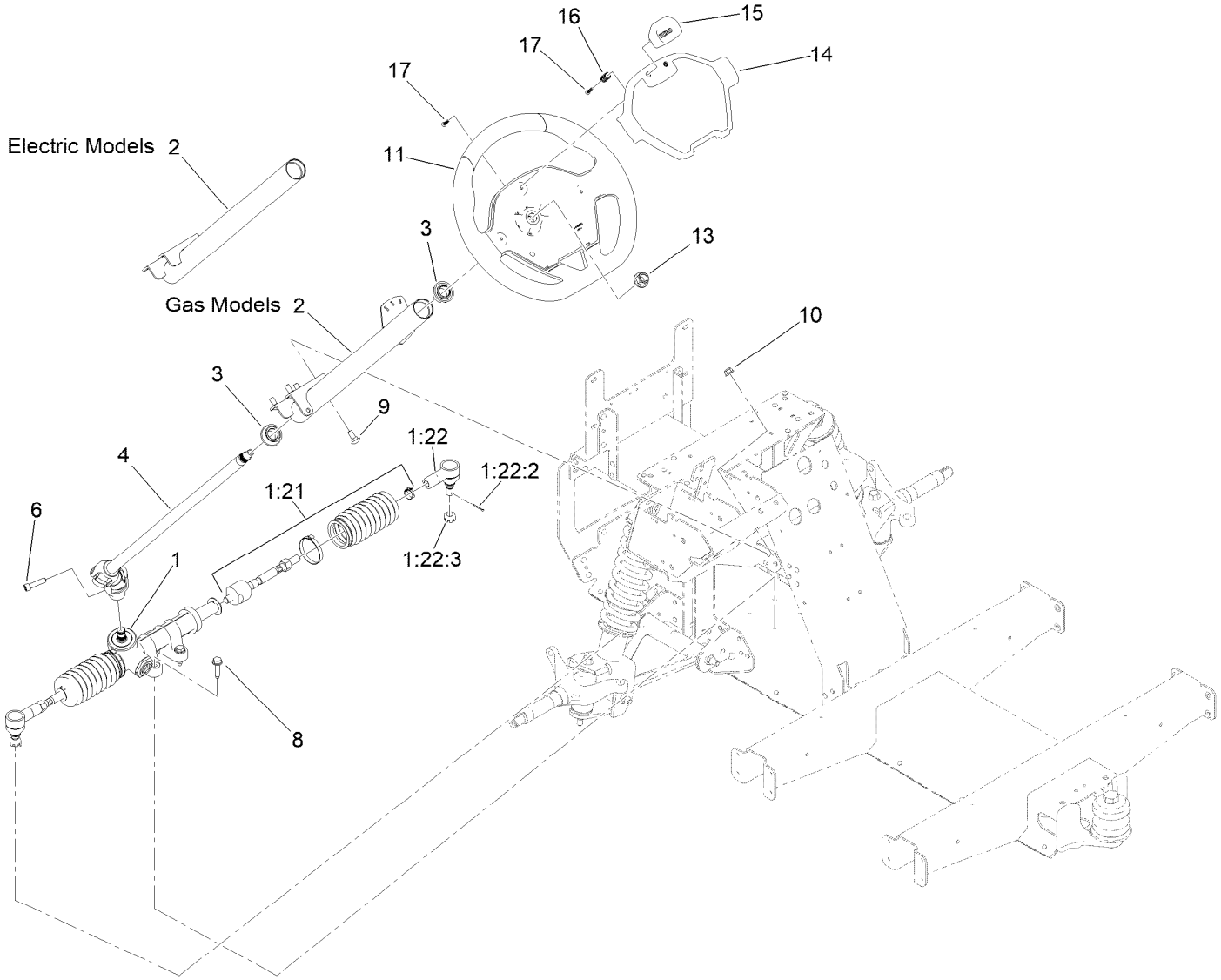

Steering Assembly

Ref.	Part Number	Qty.	Description
1	138-0114	1	Steering Rack ASM
1:21	140-4591	1	Kit-Tie Rod ASM, Gtx
1:22	140-4592	1	Kit-Rod End ASM
1:22:2	3272-42	1	Pin-Cotter
1:22:3	140-2493	1	Nut-Hex, Slotted
2	145-2056	1	Steering Column ASM, Gtx Electric
3	112-3262	2	Bearing
4	145-2050	1	Steering Shaft ASM
6	145-7145	1	Screw-HSH,Lock

Ref.	Part Number	Qty.	Description
8	32144-49	4	Screw-HWHTF
9	3230-1	4	Bolt-CARR
10	104-8300	4	Nut-HF, NI
11	144-5570	1	Steering Wheel ASM
13	99-5107	1	Nut-HF Nylock
14	144-5567	1	Cover-Wheel, Steering
15	144-5566	1	Clip-Wheel, Steering
16	144-5537	2	Spring-Compression
17	94-4496	5	Screw-PPH

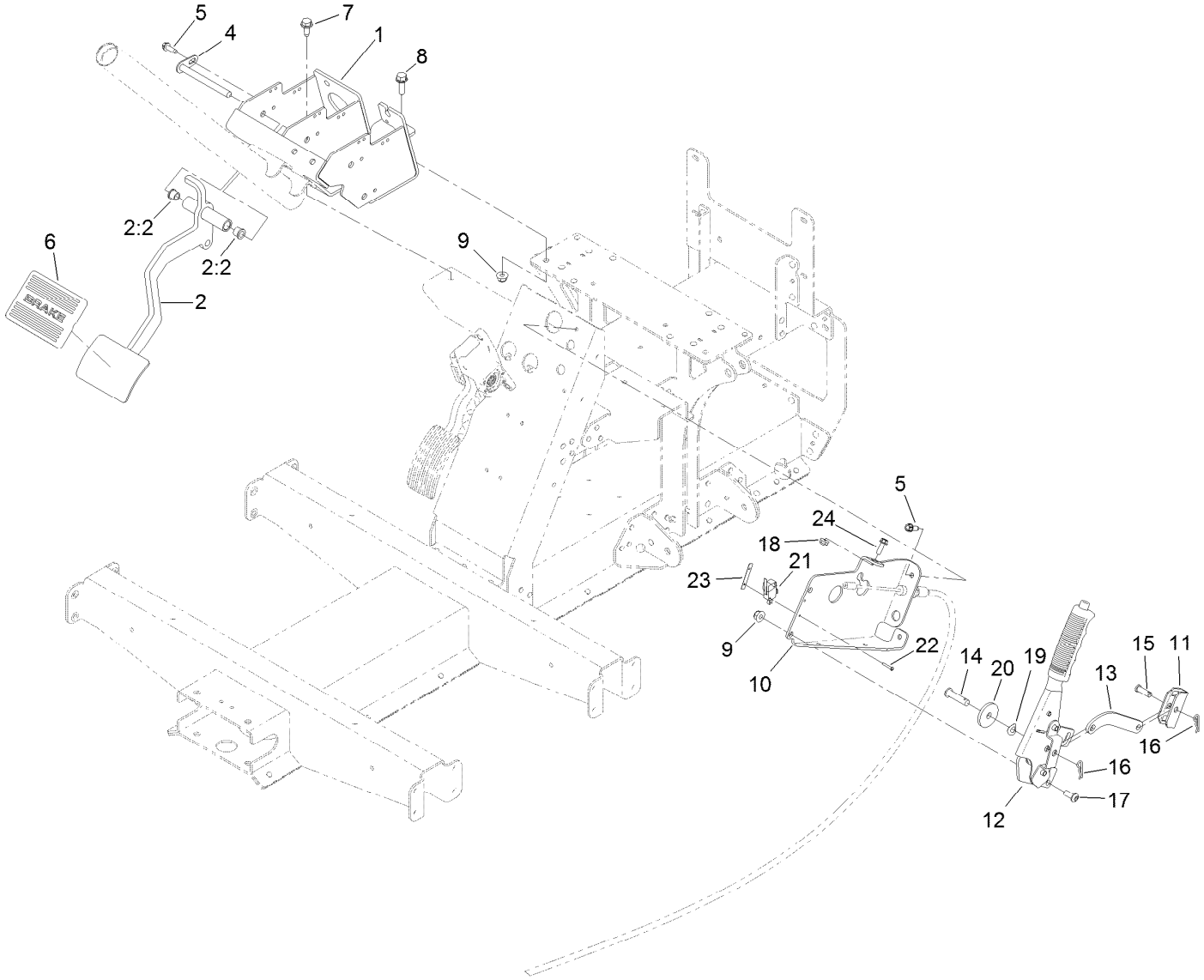

Pedal and Control Assembly

Ref.	Part Number	Qty.	Description
1	127-8817-03	1	Mount-Pedal
2	138-9385	1	Brake Pedal ASM
2:2	256-116	2	Bushing-Flange
4	131-8459	1	Shaft-Pivot
5	49-2040	3	Screw-HWHTF
6	7-3900	1	Pad-Brake
7	32144-70	2	Screw-HWHTF
8	3234-29	1	Screw-HHF
9	104-8300	3	Nut-HF, NI
10	140-4836-03	1	Mount-Park Brake
11	87-3480	1	Bracket-Equalizer, Cable
12	131-8320	1	Lever-Brake, Park

Ref.	Part Number	Qty.	Description
13	144-0516	1	Link-Park, Brake
14	283-10	1	Pin-Clevis
15	1-808280	1	Pin-Clevis
16	1-806003	2	Pin-Cotter
17	3274-55	2	Screw-HSBH
18	104-7201	1	Nut-HF, NI
19	121-4605	1	Washer-Spring
20	131-8496	1	Washer-Plain
21	108-6496	1	Switch (W/Boot)
22	3290-313	2	Screw-SPH
23	3290-354	1	Nut-Speed
24	115-5103	1	Screw-HHF

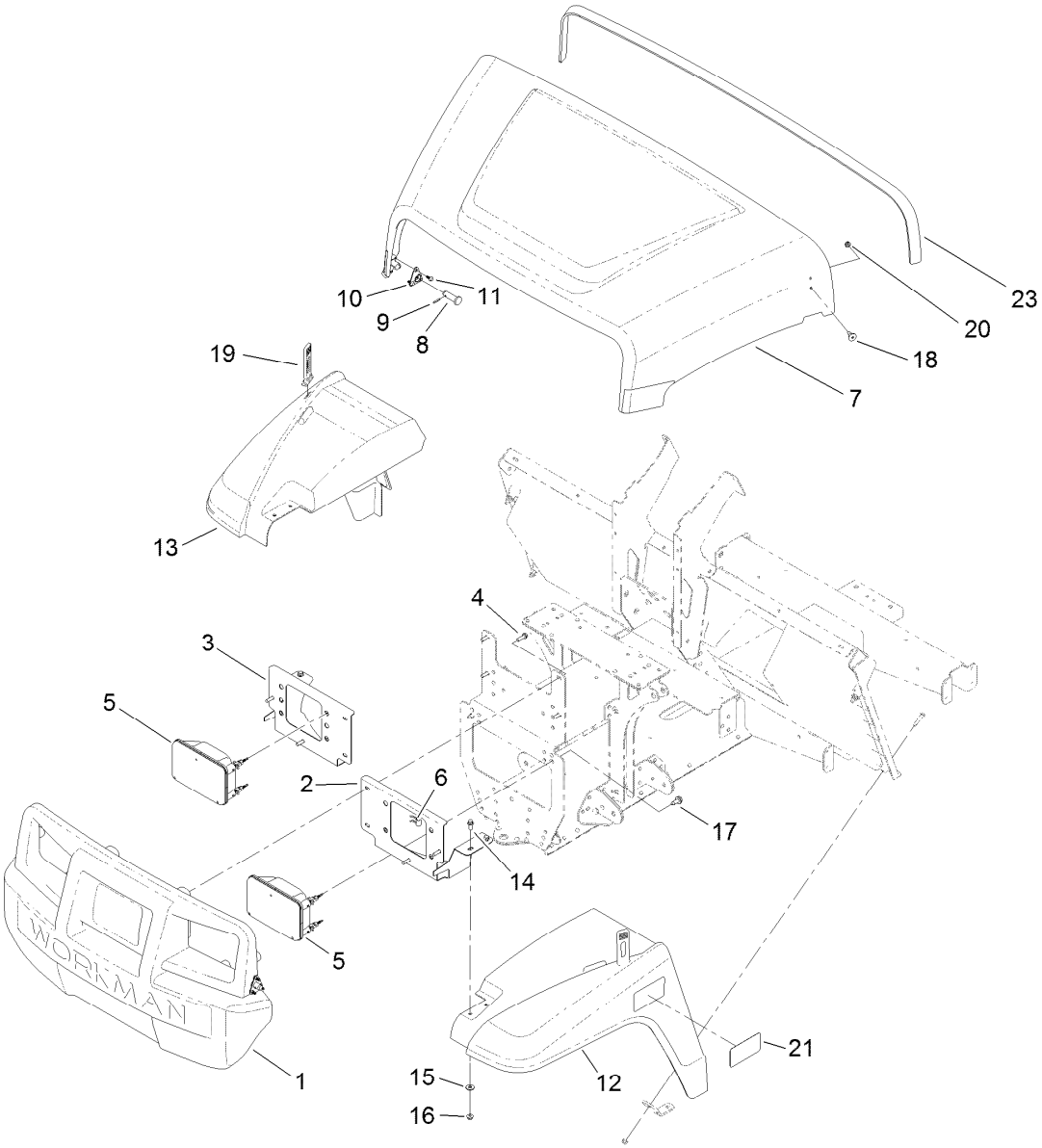

Hood and Fender Assembly

Ref.	Part Number	Qty.	Description
1	132-8530	1	Bumper
2	131-8455-03	1	Bracket-Headlight, LH
3	131-8456-03	1	Bracket-Headlight, RH
4	46-8091	8	Screw-HWH
5	138-9260	2	Headlight ASM
6	115-2408	6	Clip-Speed
7	136-6281	1	Hood
8	117-5094	2	Pin-Clevis
9	32121-50	2	Pin-Spring
10	112-3308	2	Retainer-Pin
11	121-9605	6	Screw-HWH

Ref.	Part Number	Qty.	Description
12	127-7771	1	Fender-Front, LH
13	127-7772	1	Fender-Front, RH
14	3234-33	4	Screw-HHF
15	3256-2	4	Washer-Flat
16	104-7201	4	Nut-HF, NI
17	32144-70	2	Screw-HWHTF
18	125-1122	2	Screw
19	131-8402	2	Strap-Down, Hold
20	3296-56	2	Nut-Lock, NI
21	140-4585	2	Decal-Fender, Gtx, Lithium
23	133-7210	1	Seal-Trim, Hood

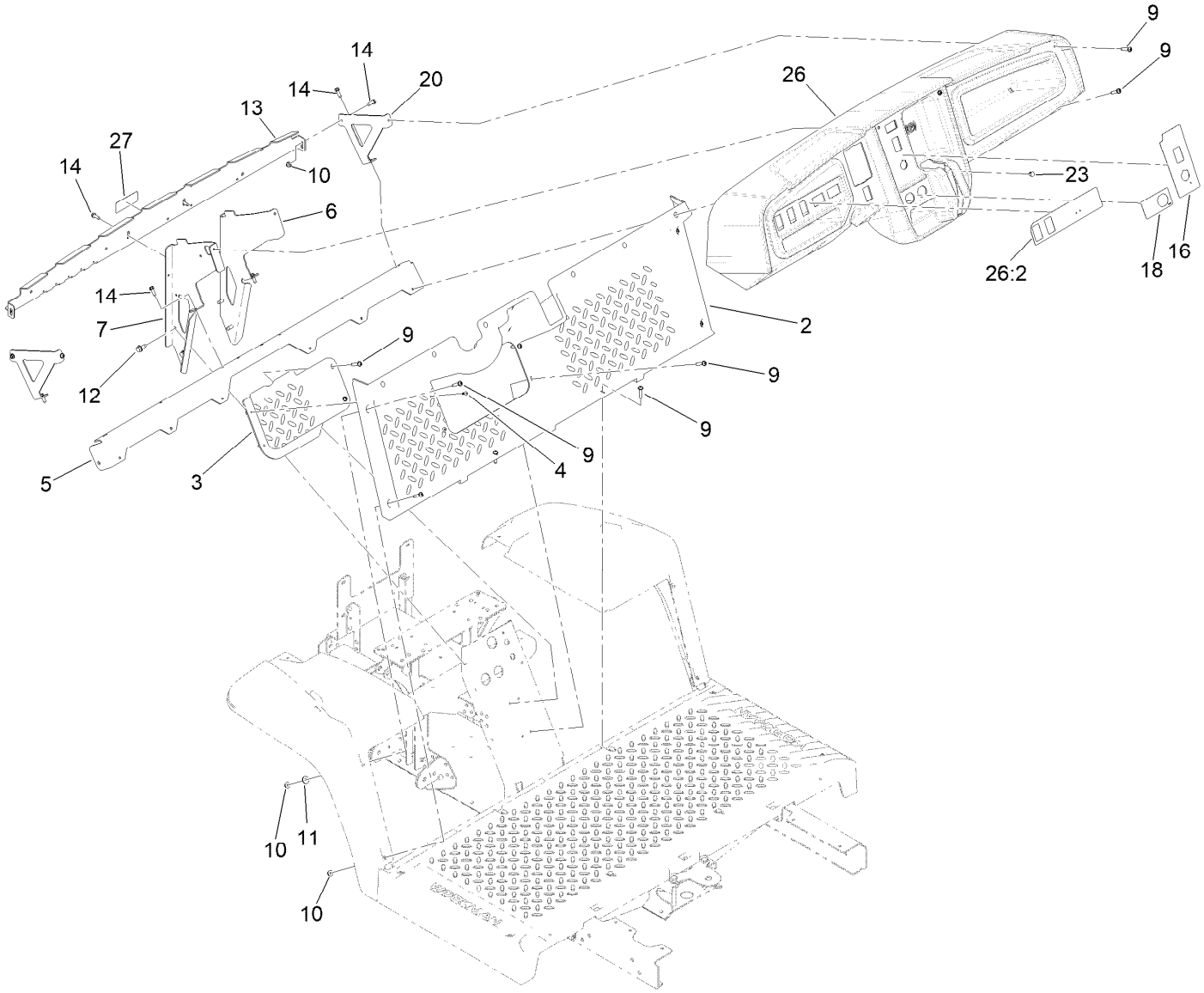

Dash Assembly

Ref.	Part Number	Qty.	Description
2	147-8212	1	Footboard
3	127-7847	1	Cover-Footboard
4	107-7461	2	Screw-Plastite
5	127-7831-03	1	Angle
6	131-8336-03	1	Bracket-Dash, RH
7	145-2094-03	1	Bracket-Dash, LH
9	132-6777	20	Screw-Twh Thd Roll
10	104-7201	6	Nut-HF, NI
11	3256-2	2	Washer-Flat
12	32144-70	4	Screw-HWHTF

Ref.	Part Number	Qty.	Description
13	131-8568-03	1	Reinforcement-Dash
14	49-2040	8	Screw-HWHTF
16	145-2263	1	Decal-Control Panel, Electric
18	131-8493	1	Decal-USB
20	131-8569-03	2	Bracket-Dash, Side
23	104-9368	1	Plug-Dome
26	145-2098	1	Dash-Gtx Lithium
26:2	145-2261	1	Decal-Dashboard, Gtx
27	145-8016	1	Decal-Gtx Electric

Reference Model 07048 For Bucket Seat Base Kit Parts

Reference Model 07047 For Bench Seat Base Kit Parts

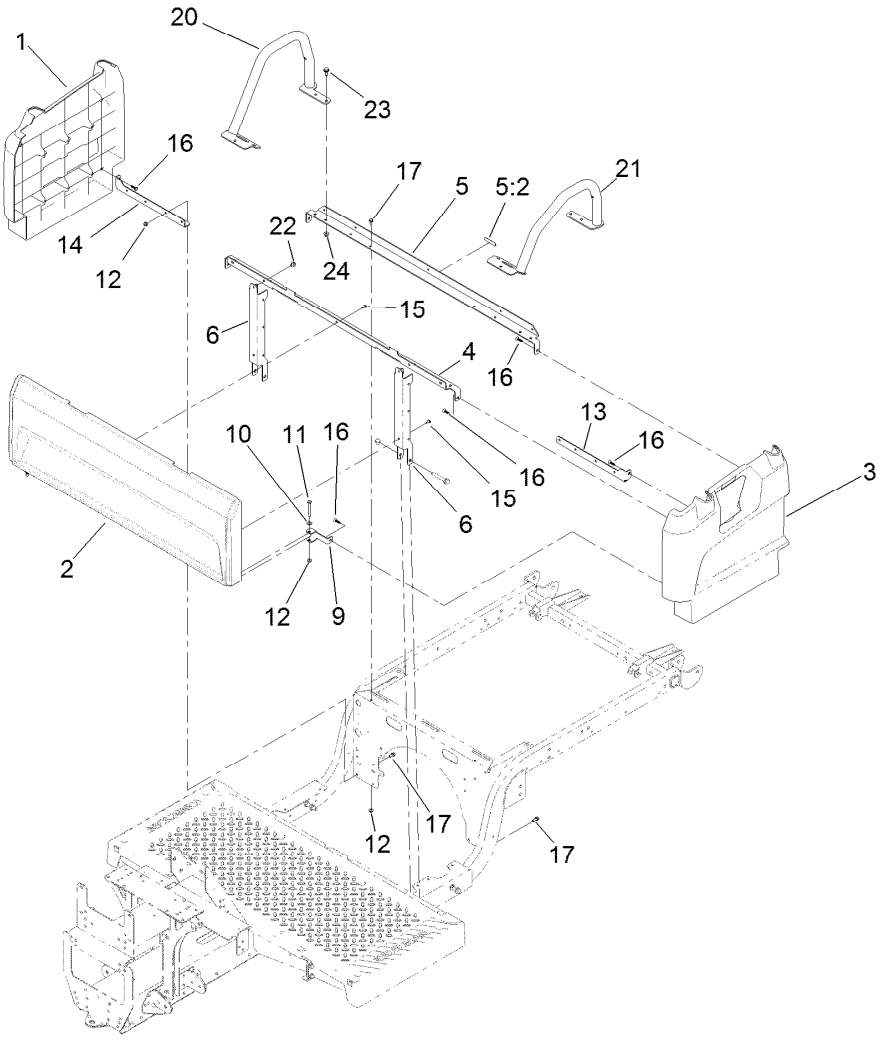

Seatbase Assembly

Ref.	Part Number	Qty.	Description
1	127-7805	1	Side-Base, Seat (RH)
2	133-7188	1	Panel-Base, Seat
3	127-7807	1	Side-Base, Seat (LH)
4	133-7345-03	1	Support-Seat
5	137-6991	1	Seat Support ASM
5:2	120-9570	1	Decal-Warning
6	127-7841-03	2	Channel-Support, Seat
9	127-7844-03	2	Clamp-Plate, Floor
10	3256-22	2	Washer-Flat
11	321-18	2	Screw-HH
12	104-7201	8	Nut-HF, NI

Ref.	Part Number	Qty.	Description
13	127-7842-03	1	Bracket-Support, Side (LH)
14	127-7843-03	1	Bracket-Support, Side (RH)
15	112-6349	5	Screw-HWH
16	120-2349	8	Screw
17	3234-33	6	Screw-HHF
20	131-8352-05	1	Restraint-Hip, RH
21	131-8353-05	1	Restraint-Hip, LH
22	46-6810	2	Screw And Washer ASM
23	32144-70	6	Screw-HWHTF
24	104-8300	6	Nut-HF, NI

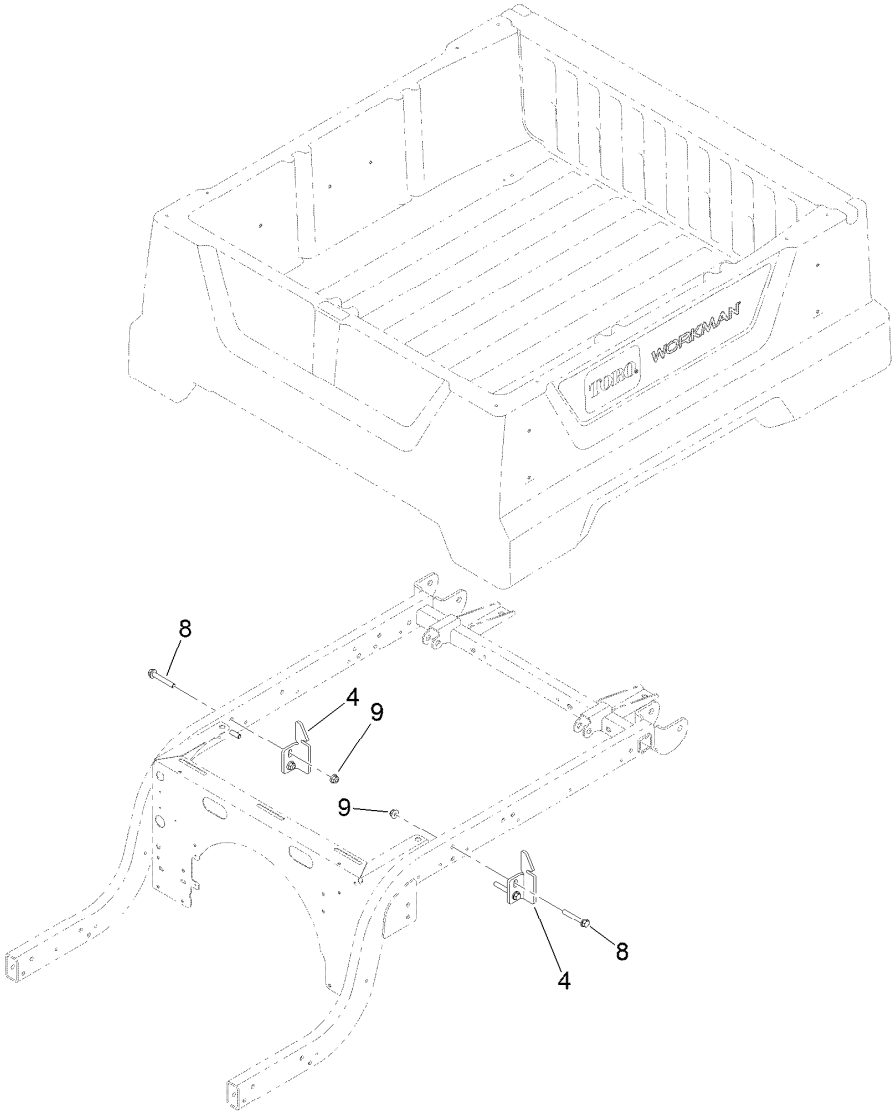

Cargo Bed Assembly

Ref.	Part Number	Qty.	Description
4	127-7428-03	2	Striker-Latch, Bed
8	3234-39	4	Screw-HHF
9	104-8301	4	Nut-HF, NI

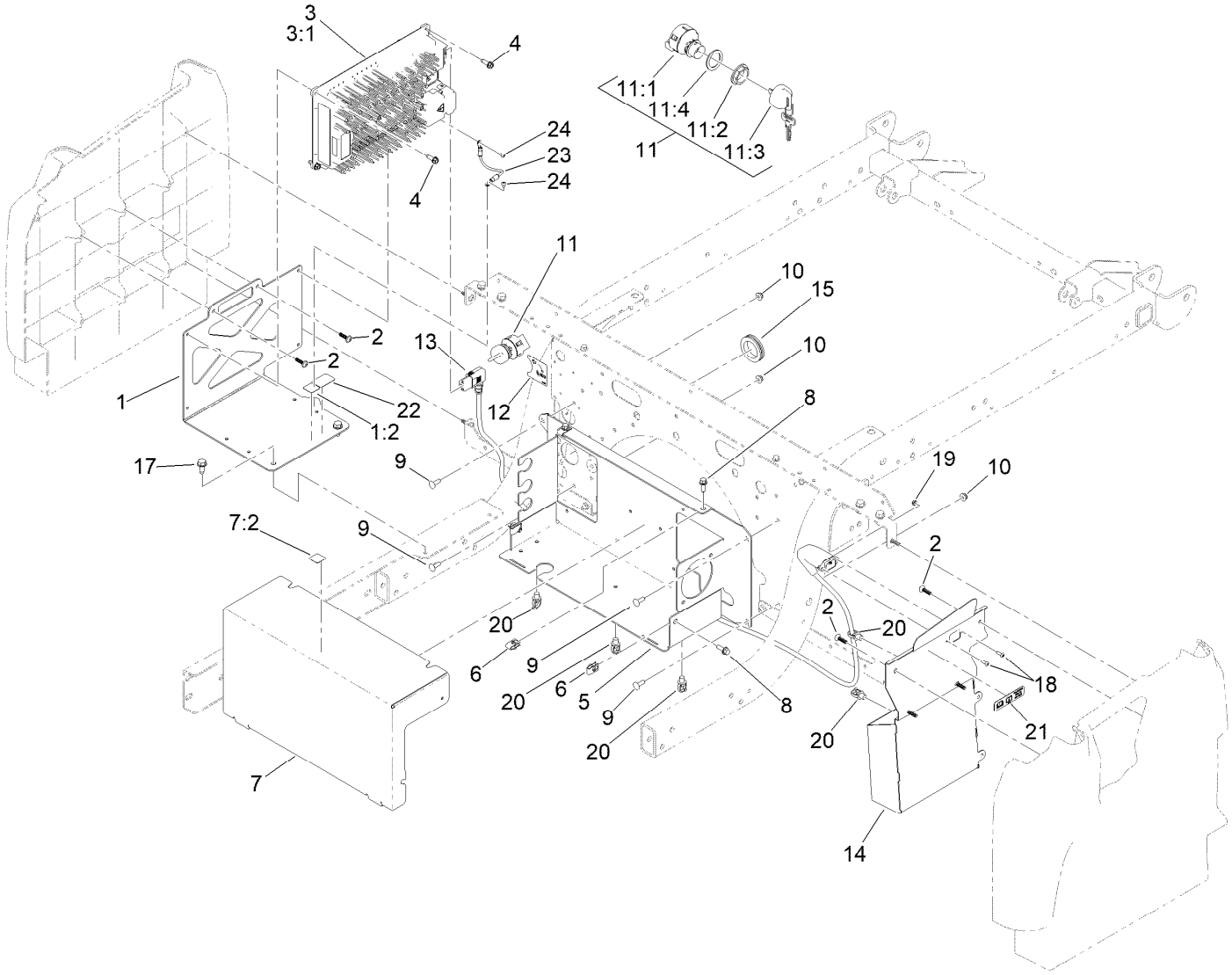

Onboard Charger Assembly

Ref.	Part Number	Qty.	Description
1	147-8213	1	Bracket-Charger
1:2	145-7345	1	Decal-Voltage, High
2	120-2349	6	Screw
3	144-5475	1	Charger-Onboard, 900W
3:1	140-2494	1	Charger Kit-Service
4	49-2040	4	Screw-HWHTF
5	145-8035-03	1	Bracket-Electronics Mount
6	107069	4	Clip
7	147-8214	1	Cover-Front
7:2	145-7345	1	Decal-Voltage, High
8	120-9678	4	Screw-HHF
9	1-807512	4	Bolt-CARR
10	104-7201	4	Nut-HF, NI
11	110-2580	1	Switch-Key, Supervisor
11:1		1	Switch-Key ●
11:2	108-8660	1	Nut-Mounting

Ref.	Part Number	Qty.	Description
11:3	110-5221	1	Set-Key, Supervisor
11:4	108-8659	1	Washer-Backup
12	131-8527	1	Decal-Mode
13	140-4628	1	Cordset W/Filter
14	140-2496-05	1	Bracket-Charger Outlet ASM [blk
15	240-7	1	Grommet-Rubber
17	32144-70	2	Screw-HWHTF
18	3250-26	2	Screw-PPH
19	3296-54	2	Nut-Lock
20	32180-030	5	Clip-Tie
21	140-4590	1	Decal-Charger Input Lithium
22	147-8205	1	Decal-Fuse 60V
23	122-2792	1	Harness-Wire, Charger Bonding
24	125-0519	2	Screw-PPH,Sheet Metal

● Not serviced separately

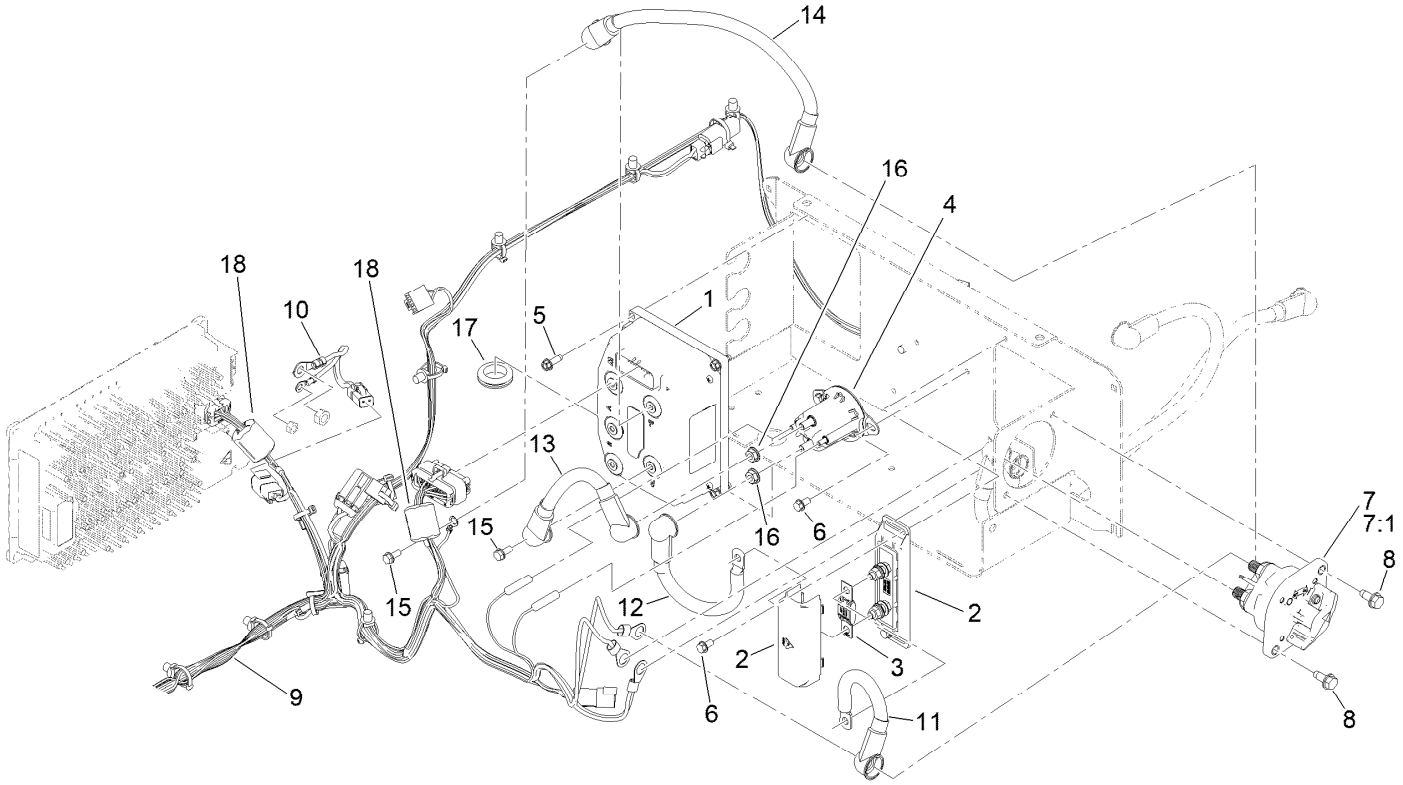

Inverter/Controller Assembly

Ref.	Part Number	Qty.	Description
1	145-5050	1	Inv/Ctrlr-48V,185Arms
2	145-4958	1	Holder-Fuse
3	122-2561	1	Fuse-200A
4	122-2616	1	Contactor-Powerseal
5	49-2040	4	Screw-HWHTF
6	32144-4	4	Screw-HWH
7	122-0603	1	Switch-Disconnect
7:1	33006-00	1	Nut-HF
8	32144-70	2	Screw-HWHTF
9	122-2325	1	Harness-Wire, Gtx-Li

Ref.	Part Number	Qty.	Description
10	122-2375	1	Harness-Wire, Charger Power Interface
11	145-8041	1	Cable-Battery,Rd ASM
12	145-8042	1	Cable-Battery,Rd ASM
13	145-8043	1	Cable-Battery,Rd ASM
14	145-8044	1	Cable-Battery,Bk ASM
15	145-5782	2	Screw-Sems
16	107-0380	2	Nut-HF
17	240-5	1	Grommet
18	147-8183	2	Ferrite, Snap-On

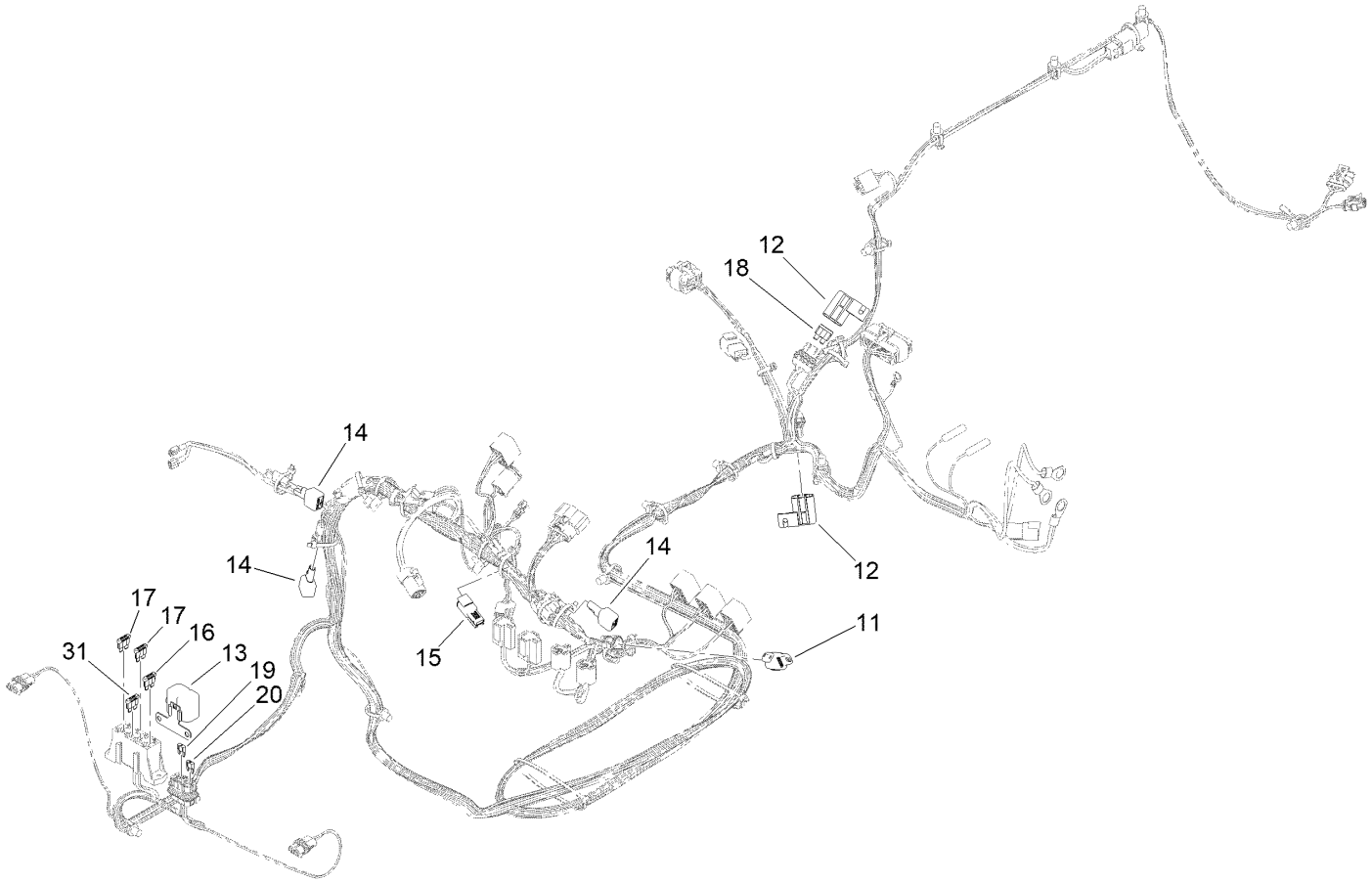

Wire Harness Assembly No. 122-2325

Ref.	*Part Number*	*Qty.*	*Description*
11	32180-089	1	Cap-Plug, 3 Way
12	32180-567	2	Cover-Aptiv, Modified
13	32180-179	1	Cover-Bussman
14	100-4918	3	Diode
15	32180-282	1	Conn, Res, 120 Ohm
16	117-4724	1	Fuse-Blade, 10A
17	117-4726	2	Fuse-Blade, 20A
18	117-4728	1	Fuse-Blade, 30A
19	121-8864	1	Fuse-Mini Blade, 5 Amp
20	121-8866	1	Fuse-Mini Blade, 10 Amp
31	117-4722	1	Fuse-Blade, 5A

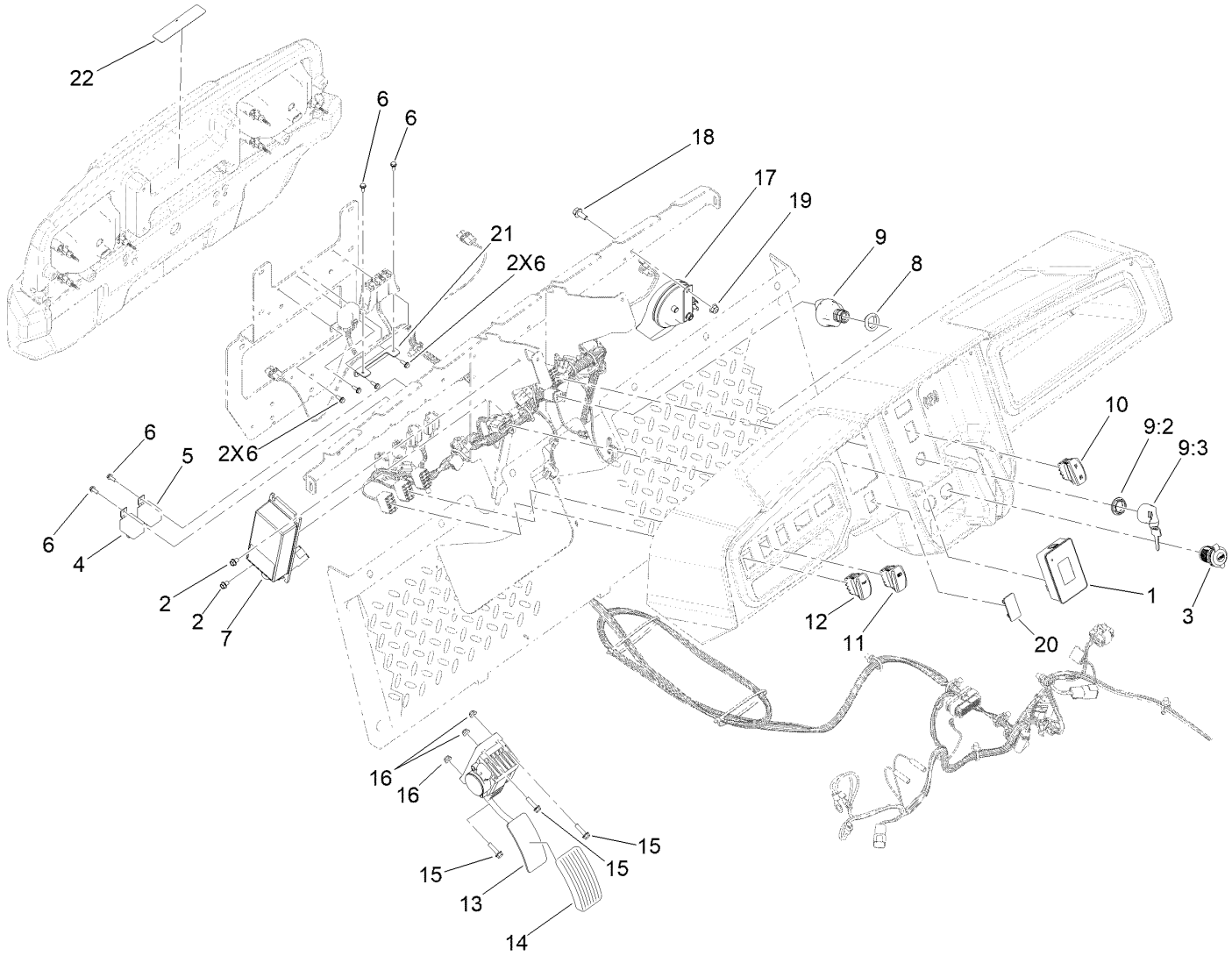

Accelerator Pedal and Horn Assembly

Ref.	Part Number	Qty.	Description
1	122-2152	1	Controller, Tdm-1601
2	99-8445	2	Screw-HWH
3	131-8388	1	Socket-USB
4	122-2401	1	Relay, 48V Coil, 50A At 48V
5	122-2400	1	Relay, 12V Coil, 50A At 48V
6	32144-1	8	Screw-Taptite
7	144-6975	1	Converter DC-DC
8	145-7110	1	Adapter-Switch, Key
9	122-2513	1	Switch-Ignition, Suns
9:1	121-5160	1	Nut-Hex ●
9:2	122-2704	1	Nut-Face, M22 (Plastic)
9:3	121-5162	1	Set-Key, Ignition
10	122-2654	1	Switch-Rocker, On-None-On

Ref.	Part Number	Qty.	Description
11	144-2405	1	Switch-Rocker, On-None-On
12	144-2415	1	Switch-Rocker, (On)-None-Off
13	144-2740	1	Pedal ASM-Accelerator
14	140-4572	1	Pedal Pad-Throttle
15	120-4654	3	Screw-HHF
16	104-7201	3	Nut-HF, NI
17	107-0358	1	Horn
18	3234-5	1	Screw-HHF
19	104-8300	1	Nut-HF, NI
20	99-7420	1	Plug-Hole
21	145-8046	1	Bracket-Fuse Block
22	147-8184	1	Decal-Fuse Block 12V/60V

● Not illustrated

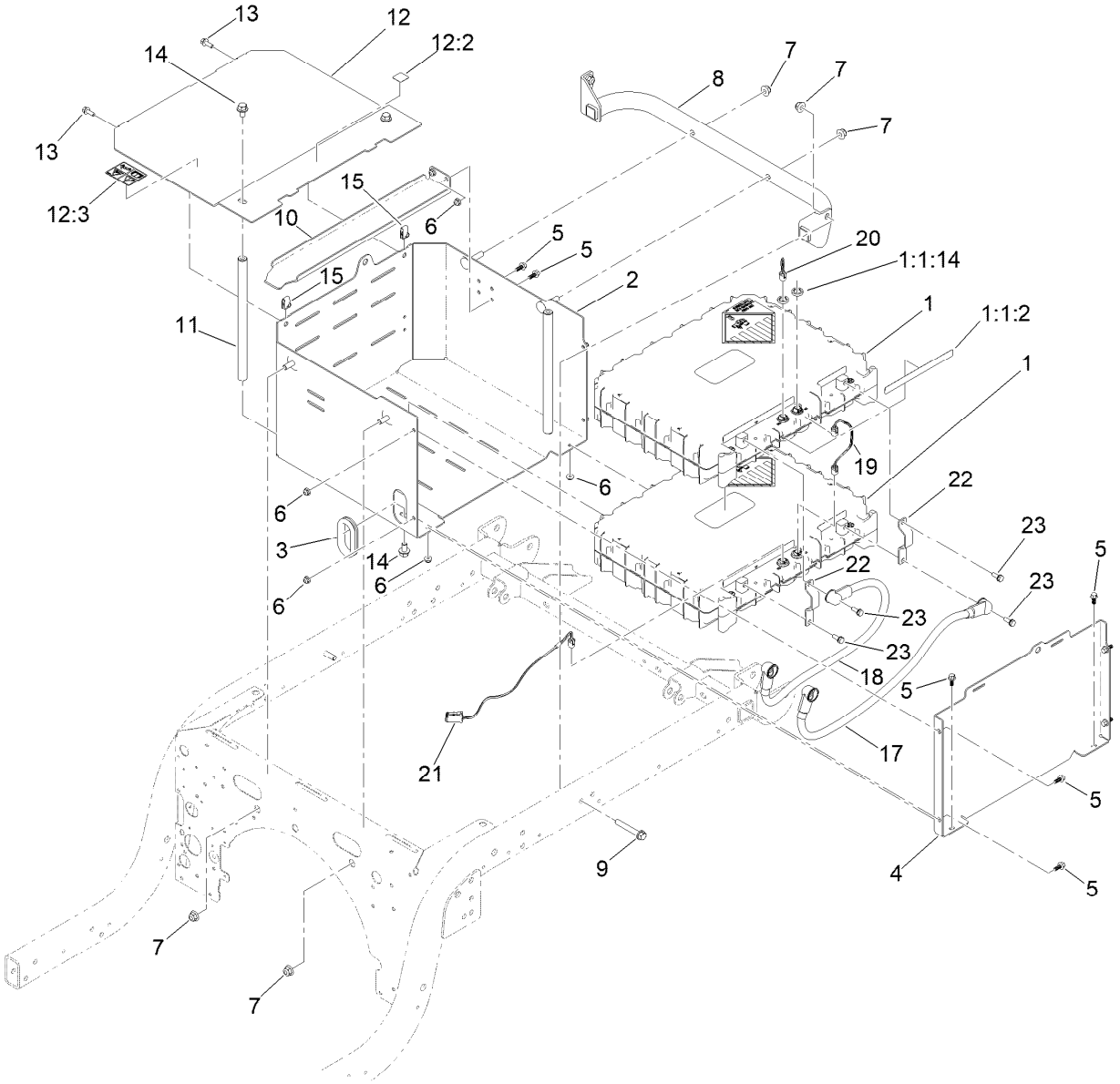

Battery Assembly

Ref.	Part Number	Qty.	Description
1	145-5385	2	Battery ASM
1:1:2	145-5338	1	Decal-Warning, Battery
1:1:14	32180-466	2	Nut-Mounting, Jwpf Panel Lock
2	147-2792-03	1	Bracket ASM [black]
3	240-12	1	Grommet-Rubber
4	145-8033-03	1	Panel-Left
5	99-6810	8	Screw-HHF
6	104-7201	8	Nut-HF, NI
7	104-8301	6	Nut-HF, NI
8	145-8004-03	1	Battery Mount ASM [black]
9	3234-39	2	Screw-HHF
10	147-2755-03	1	Bracket-Hold Down [black]
11	147-2779	2	Bar-Round, Battery
12	147-8215	1	Panel-Top
12:2	145-7345	1	Decal-Voltage, High

Ref.	Part Number	Qty.	Description
12:3	139-4610	1	Decal-Warning
13	120-9678	2	Screw-HHF
14	3234-9	4	Screw-HHF
15	107069	2	Clip
16	107-0382	1	Powercord-AC, Europe ●
16	107-0383	1	Powercord-AC, U.K. ●
17	145-8039	1	Cable-Battery,Rd ASM
18	145-8040	1	Cable-Battery,Bk ASM
19	140-9565	1	Harness-Wire, Data Interface
20	122-2323	1	Harness-Wire, Can Terminator
21	122-2736	1	Harness-Wire, Battery Interface
22	145-7343	2	Bar-Bus, 200A
23	145-5783	4	Screw-Sems

● Not illustrated

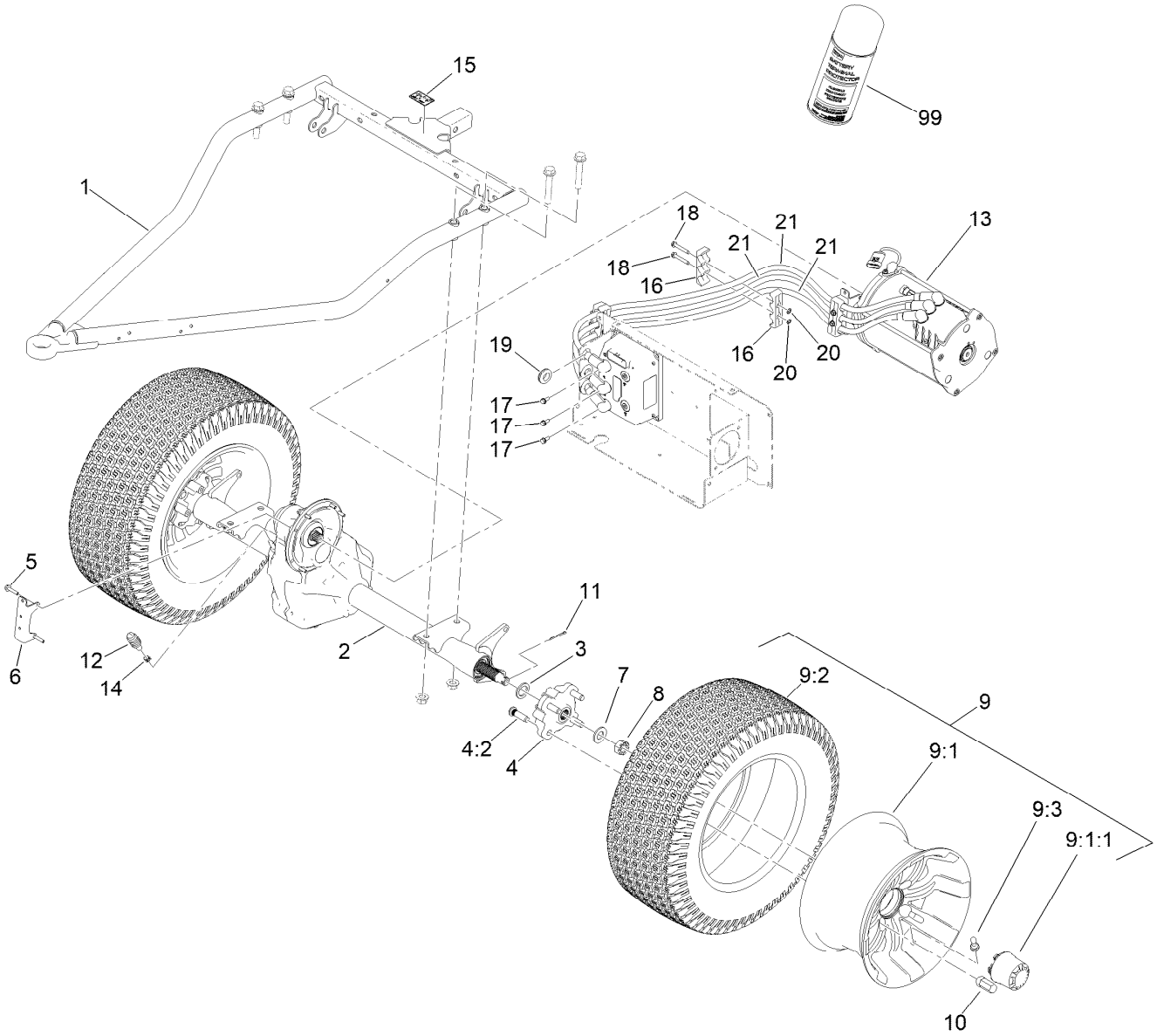

Rear Wheel and Transaxle Assembly

Ref.	Part Number	Qty.	Description
1	140-2568-03	1	Gtx-E Swing Arm ASM [black]
2	136-6340	1	Transaxle ASM
3	131-8570	2	Spacer-Hardened
4	140-9951	2	Rear Hub ASM
4:2	10-6830	4	Stud-Type, Drive
5	33103-030	6	Screw-HHF
6	145-8038	1	Bracket-Cable
7	92-5836	2	Washer
8	32136-5	2	Nut-Hex, Slotted
9	147-2763	2	Al Wheel And Tire ASM
9:1	147-2764	1	Wheel-Aluminum
9:1:1	147-2839	1	Cap-Aluminum Wheel
9:2	120-3271	1	Tire
9:3	232-27	1	Stem-Valve
10	139-3603	8	Nut-Lug
11	1-806800	2	Pin-Cotter
12	127-8859	1	Bellows-Breather
13	137-6936	1	Motor-AC
14	2412-146	1	Clamp-Hose
15	137-9984	1	Decal-Load, Towing
16	145-7166	6	Clamp-Cable
17	145-5782	3	Screw-Sems
18	92-1616	6	Screw-HWHTF
19	240-6	3	Grommet-Rubber
20	32115-15	2	Nut-Push
21	145-8045	3	Cable-Battery,Rd ASM
99	107-0392	1	Protection-Terminal, Aerosol

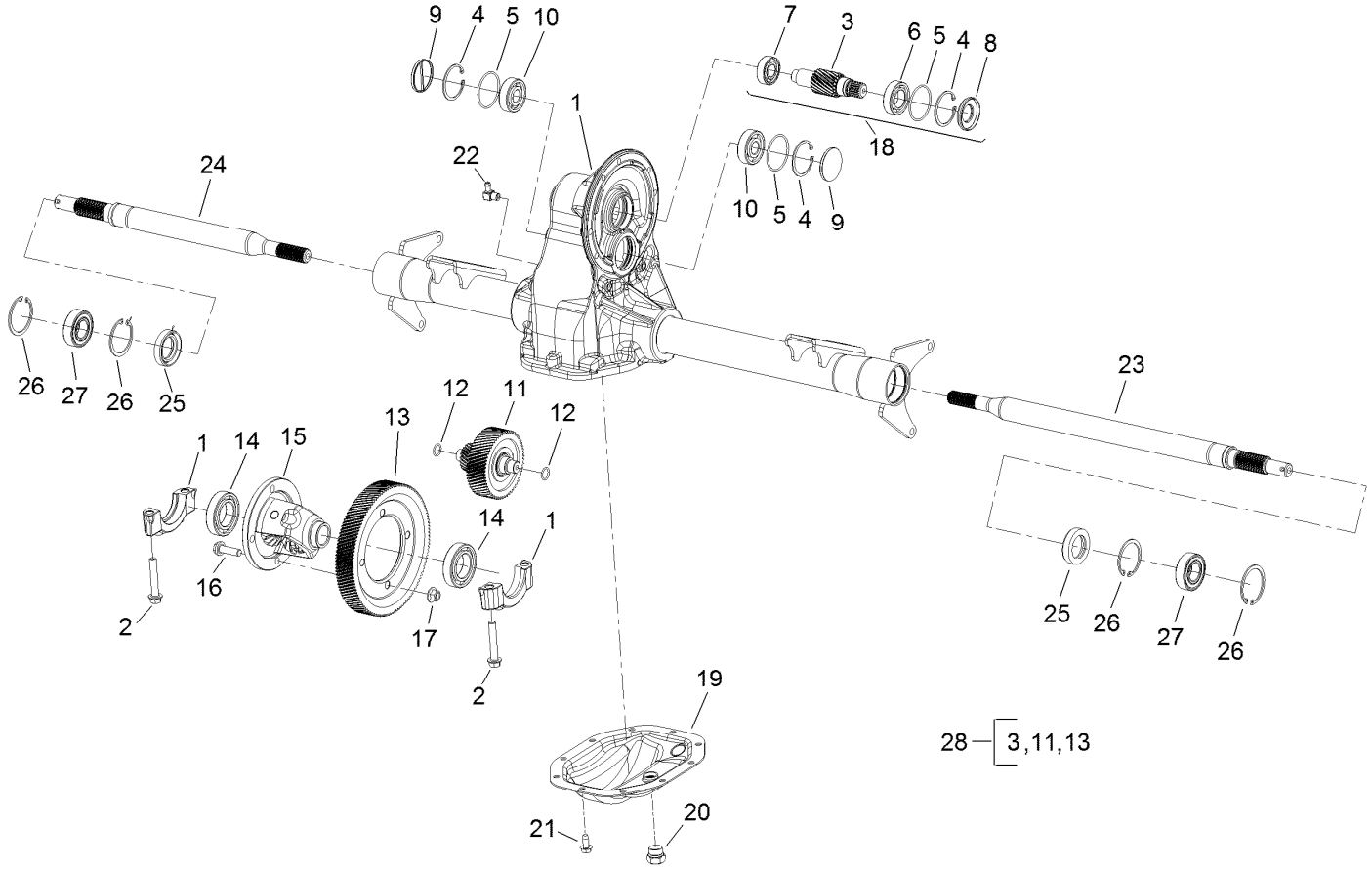

Transaxle Assembly No. 136-6340

Ref.	Part Number	Qty.	Description
1	133-2447	1	Housing-Axle
2	133-2448	4	Bolt-Cap, Bearing
3	133-2485	1	Gear-Input
4	133-2450	3	Ring-Retaining
5	133-2451	3	O-Ring
6	133-2452	1	Bearing-Ball
7	133-2453	1	Bearing-Ball
8	133-2454	1	Seal-Oil
9	133-2455	2	Plug-Cap, End
10	133-2456	2	Bearing-Ball
11	133-2486	1	Intermediate Gear ASM
12	133-2458	2	O-Ring
13	133-2459	1	Gear-Drive, Final
14	133-2460	2	Bearing-Ball

Ref.	Part Number	Qty.	Description
15	133-2461	1	Differential ASM
16	133-2462	4	Bolt-HHF
17	133-2463	4	Nut-Lock
18	133-2487	1	Input Gear Kit
19	136-6341	1	Plate-Cover
20	133-2466	1	Plug-HH
21	133-2467	10	Screw-Tapping
22	133-2468	1	Elbow-Hose
23	133-2469	1	Shaft-Axle, LH
24	133-2470	1	Shaft-Axle, RH
25	112-3140	2	Seal-Oil
26	133-2472	4	Ring-Retaining
27	108-2425	2	Bearing-Ball
28	108-2409	1	Internal Gear Kit

Electric Motor Assembly No. 137-6936

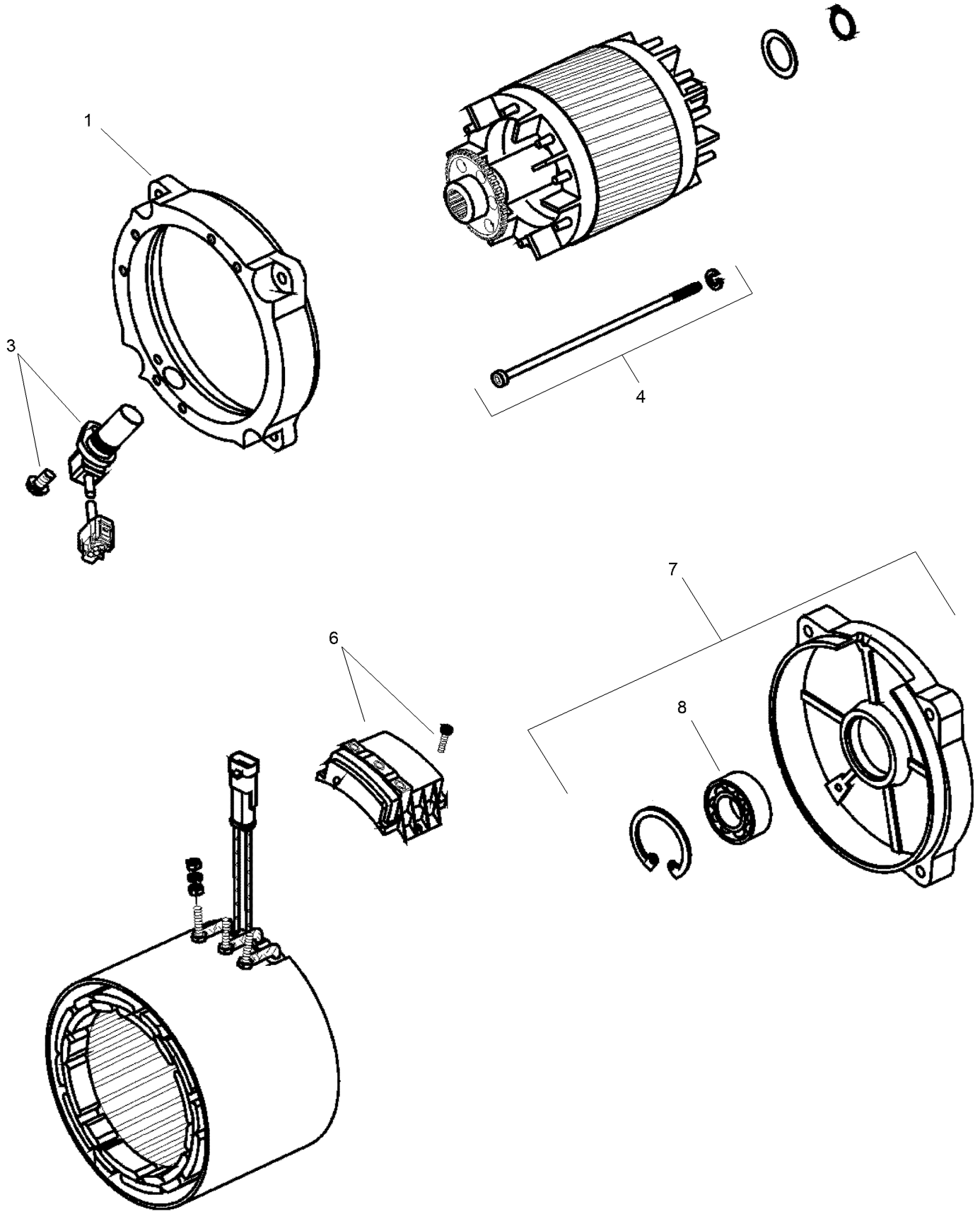

Electric Motor Assembly No. 137-6936 (continued)

Ref.	Part Number	Qty.	Description
1	132-4924	1	Bracket-End, Drive
3	132-4925	1	Sensor
4	132-4926	1	Screw
6	132-4927	1	Plate-Connection
7	132-4928	1	Bracket-End, Rear
8	132-4929	1	Bearing

Reference Model 07048 For Bucket Seat Base Kit Parts

Reference Model 07047 For Bench Seat Base Kit Parts

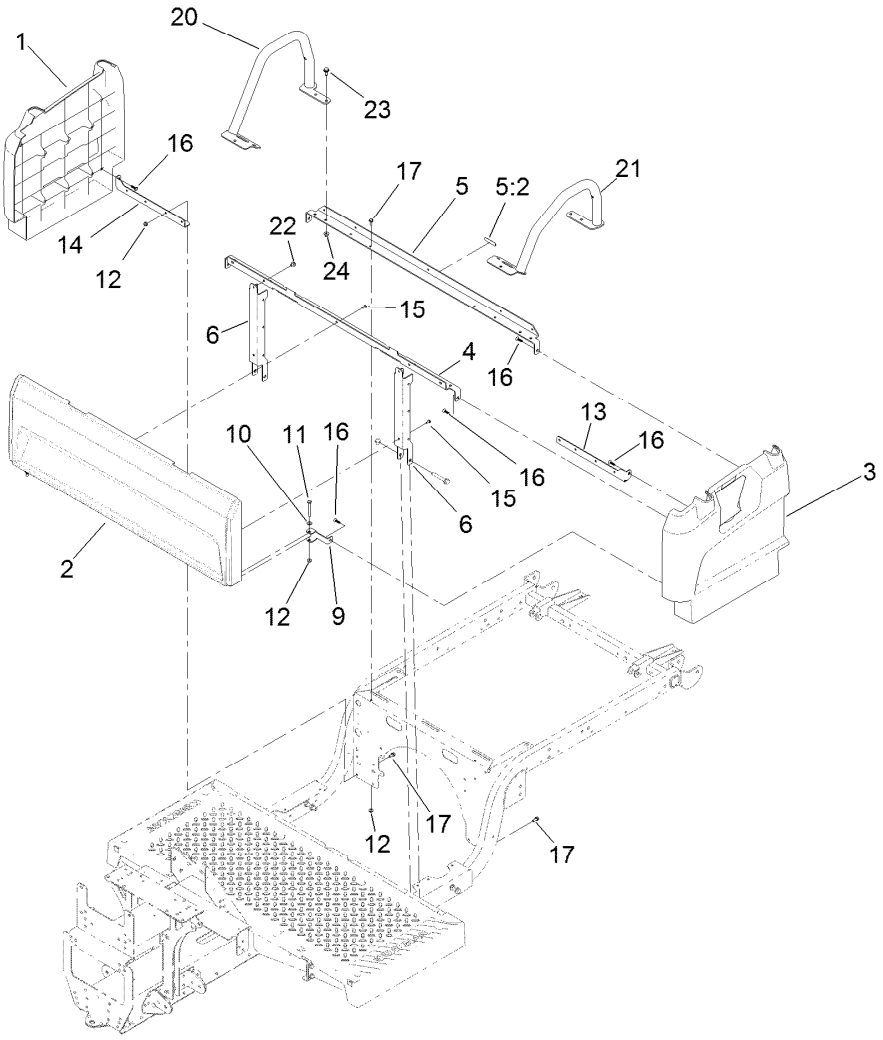

Seatbase Assembly

Ref.	Part Number	Qty.	Description
1	127-7805	1	Side-Base, Seat (RH)
2	133-7188	1	Panel-Base, Seat
3	127-7807	1	Side-Base, Seat (LH)
4	133-7345-03	1	Support-Seat
5	137-6991	1	Seat Support ASM
5:2	120-9570	1	Decal-Warning
6	127-7841-03	2	Channel-Support, Seat
9	127-7844-03	2	Clamp-Plate, Floor
10	3256-22	2	Washer-Flat
11	321-18	2	Screw-HH
12	104-7201	8	Nut-HF, NI

Ref.	Part Number	Qty.	Description
13	127-7842-03	1	Bracket-Support, Side (LH)
14	127-7843-03	1	Bracket-Support, Side (RH)
15	112-6349	5	Screw-HWH
16	120-2349	8	Screw
17	3234-33	6	Screw-HHF
20	145-2075-05	1	Hip Restraint ASM, RH
21	145-2070-05	1	Hip Restraint ASM, LH
22	46-6810	2	Screw And Washer ASM
23	32144-70	6	Screw-HWHTF
24	104-8300	6	Nut-HF, NI

Attachments and Accessories

For 07433TC — Workman GTX Lithium Utility Vehicle

Product Name	Model/Part
Hose Reel Mounting Kit	07027
Trash Can Mounting Kit	07028
Bed Rack Kit	07031
ROPS Kit	07032
Cargo Bed Kit	07046
Bench Seat Base Kit	07047
Bucket Seat Base Kit	07048
Cab Kit	07142
48V Electric Lift Kit	07143
Brush Guard Kit	07145
Front Hitch Kit, Workman GTX Series Utility Vehicles with Brush Guard	07146
Front Hitch Kit, Workman GTX or MDX Series Utility Vehicles without Brush Guard	07147
Storage Box Kit	07156
6in L-Track Kit	07158
2in L-Track Kit	07159
GTX Ball Cage ROPS, Certified	07161
48V 6 Foot Bed Electric Lift Kit	07168
Canopy W/ ROPS	07169
Rear Attachment Receiver, Workman GTX Series Utility Vehicle with Steel Cargo Bed	07186
Canopy Mount Kit, Workman GTX Utility Vehicle with Extended Flatbed	07199
Steel Cargo Bed Base	07450
Steel Cargo Bed Solid Sides Kit	07451
Workman GTX 2-Person Canopy	07921
Folding Windshield Kit, Workman GTX Utility Vehicle with Canopy	07923
Exterior Mirror Kit	130-5448
Interior Mirror Kit	130-5449
Beacon Kit	130-5484
Work Light Kit	130-5485
Windshield Washer Fluid Kit, 2015 and after Workman MD/HD Series Utility Vehicle	130-5615
Small Seat Cover	131-6690
Reverse Alarm Kit	131-8549
Power Point Kit	131-8550
Wide Angle Mirror Kit, Utility Vehicle with Canopy	133-1009
Wide Angle Mirror Kit	133-1038
Horn Kit	133-3017
Bracket-Mount, Radio	133-7111-03
Mount-Ball	133-7116
Road Light and Homologation Kit	133-7128
Cab Mount Kit, Workman GTX Utility Vehicle with Extended Flatbed	133-7198
Service Hood ASM	133-7209
Door Mount Mirror Kit	136-1997
Small Bedrack Mount Grip Kit	136-6311
Large Bedrack Mount Grip Kit	136-6312
Glove Box Cover Kit	137-2883
Plate-Skid	137-2887-03

Attachments and Accessories (continued)

Ignition Switch ASM (Key1) 138-3505
Ignition Switch ASM (Key2) 138-3506
Ignition Switch ASM (Key3) 138-3507
Ignition Switch ASM (Key4) 138-3508
Ignition Switch ASM (Key5) 138-3509
Brake and Signal LED Light Kit, Workman GTX Gasoline Utility Vehicle or Serial Number 404400000 and After Workman GTX Electric Utility Vehicle 140-4785
LED Homologation Lamp Kit 147-2798

Notes:

Notes:

Notes:

TORO®

Count on it.