Form No. 3465-826 Rev B

TORO®

Count on it.

Parts Catalog

Workman® MDX

Lithium Utility Vehicle

Model No. 08303TC—Serial No. 415000000 and Up

Register at www.Toro.com.
Original Instructions (EN)

CE

3465-826 B

Ordering Replacement Parts

To order replacement parts, please supply the part number, the quantity, and the description of each part desired.

Understanding Reference Numbers

Each identified part in an illustration has a reference number. The reference number for a part also appears in the parts list, along with other information about the part.

This catalog uses two special reference number formats, one to indicate parts in a service assembly and another to indicate the quantity of a given part in an illustration.

Service Assembly Reference Numbers

Parts in service assemblies have reference numbers in the form a:b. The a represents the reference number of the entire service assembly and the b represents a sequential number unique to each part within the service assembly.

For example, a wheel assembly might be identified by reference number 6, the tire by 6:1, the valve by 6:2, and the wheel by 6:3. When you order the assembly identified by reference number 6, you receive all parts identified by reference numbers 6:1,6:2, and 6:3. However, you may also order any part individually. Reference numbers of this type appear in illustration and in parts lists.

Reference Numbers Indicating Quantity

In an illustration, if a reference number indicates more than one part, the reference number has the form nX y. The n represents the quantity of the part, the X is the multiplication symbol, and the y represents the reference number.

For example, in an illustration, the reference number 2X 37 means that two of the parts identified by reference number 37 are indicated.

Contents

Front Frame and Suspension Assembly 4
Rear Frame and Suspension Assembly 6
Front Brake Assembly 8
Master Cylinder Assembly No. 104-6782 10
Brake Caliper Assembly No. 161-1890 11
Rear Brake Assembly 12
Steering Assembly 14
Accelerator and Brake Pedal Assembly 16
Hood and Fenders Assembly 18
Dash Assembly 20
Seatbase Assembly 22
Cargo Bed Assembly 24
Cargo Bed Service Assembly No. 147-4026 26
Battery and Transaxle Assembly 28
Transaxle Assembly No. 147-3858 30
Electric Motor Assembly No. 137-6936 32
Electrical Assembly 34
Wire Harness Assembly No. 122-2478 36
Attachments and Accessories 38

© 2026—The Toro® Company
8111 Lyndale Avenue South
Bloomington, MN 55420

Contact us at www.Toro.com.
Printed in the USA.
All Rights Reserved

Front Frame and Suspension Assembly

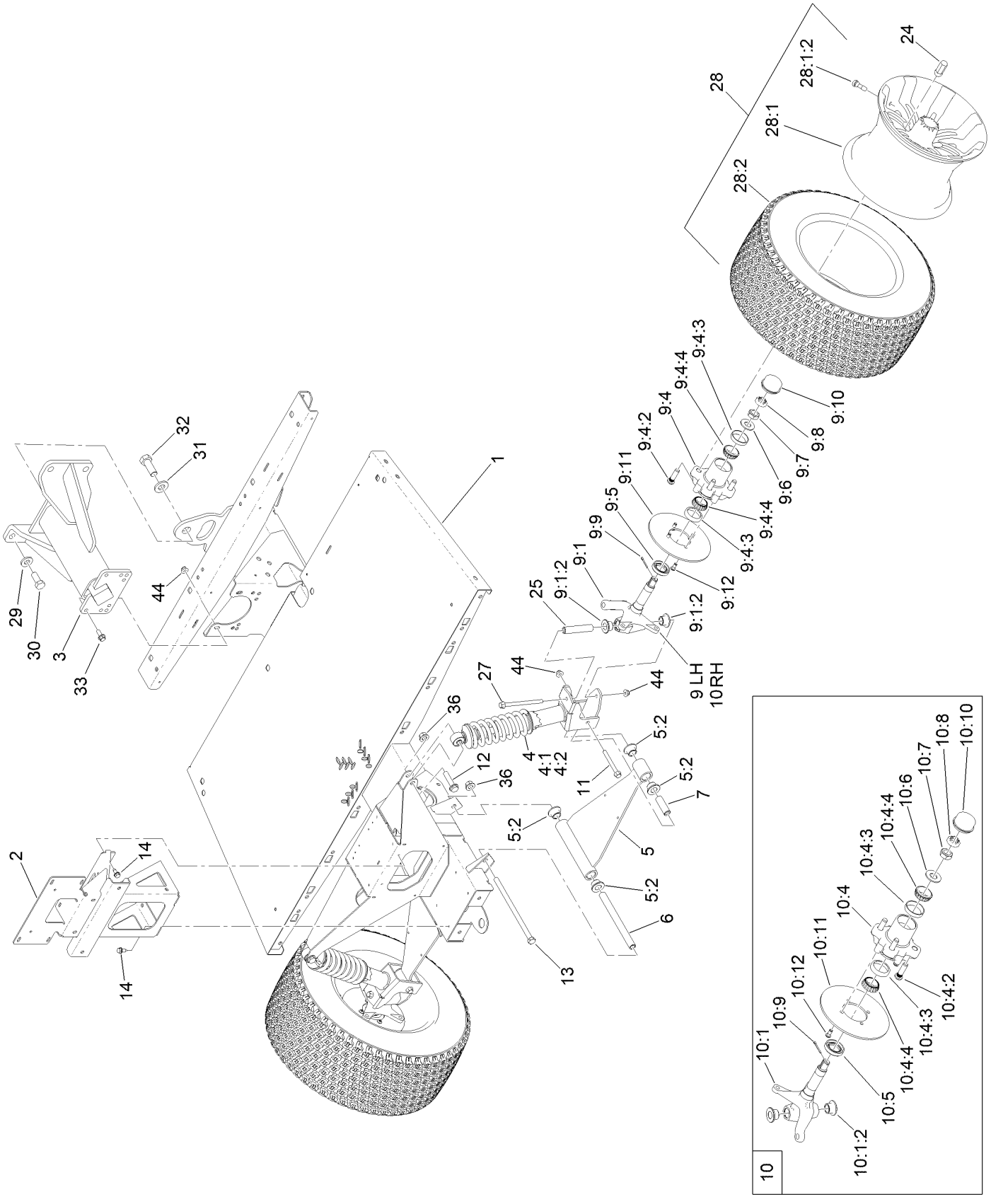

Front Frame and Suspension Assembly (continued)

Ref.	Part Number	Qty.	Description
1	161-1945-03	1	Front Frame ASM [black]
2	132-6736-03	1	Support-Bumper
3	99-7700	1	Yoke-Pivot
4	132-6791	2	Strut ASM
4:1	133-0556	1	Spring-Coil
4:2	131-8574	1	Isolator-Shock
5	144-2160	2	Control Arm ASM
5:2	140-4615	4	Bushing-Flange
6	133-0595	2	Sleeve-Control Arm, Inner
7	131-8583	2	Sleeve-Control Arm, Outer
9	140-9835	1	LH Spindle ASM
9:1	144-5468	1	Spindle ASM LH
9:1:2	140-4615	2	Bushing-Flange
9:4	144-5470	1	Front Hub ASM
9:4:2	10-6830	4	Stud-Type, Drive
9:4:3	254-72	2	Bearing-Cup, Tapered
9:4:4	254-94	2	Bearing-Cone, Tapered
9:5	112-1690	1	Seal-Oil
9:6	93-0309	1	Washer-Tab
9:7	3220-7	1	Nut-Jam
9:8	93-0307	1	Nut-Lock, Retainer
9:9	3272-12	1	Pin-Cotter
9:10	241-119	1	Cap-Dust
9:11	139-4474	1	Rotor-Brake
9:12	121-9671	4	Screw-HSBH,Patch
10	140-9836	1	RH Spindle ASM
10:1	144-5469	1	Spindle ASM RH
10:1:2	140-4615	2	Bushing-Flange
10:4	144-5470	1	Front Hub ASM
10:4:2	10-6830	4	Stud-Type, Drive
10:4:3	254-72	2	Bearing-Cup, Tapered
10:4:4	254-94	2	Bearing-Cone, Tapered
10:5	112-1690	1	Seal-Oil
10:6	93-0309	1	Washer-Tab
10:7	3220-7	1	Nut-Jam
10:8	93-0307	1	Nut-Lock, Retainer
10:9	3272-12	1	Pin-Cotter
10:10	241-119	1	Cap-Dust
10:11	139-4474	1	Rotor-Brake
10:12	121-9671	4	Screw-HSBH,Patch
11	139-3370	2	Screw-HF
12	3234-46	2	Screw-HHF
13	325-39	2	Screw-HH
14	32144-70	6	Screw-HWHTF
24	139-3603	8	Nut-Lug
25	131-8582	2	Sleeve-Kingpin
27	139-3350	2	Screw-HF
28	147-3969	2	Wheel And Tire ASM
28:1	147-3967	1	Wheel-Aluminum
28:1:2	232-27	1	Stem-Valve
28:2	120-3271	1	Tire
29	99-7667	4	Washer-Flat
30	327-4	4	Screw-HH
31	87-3060	1	Washer-Hardened
32	328-24	1	Screw-HH
33	131-2220	4	Screw-HHF
36	99-5107	4	Nut-HF Nylock
44	139-3380	8	Nut-HF

Rear Frame and Suspension Assembly

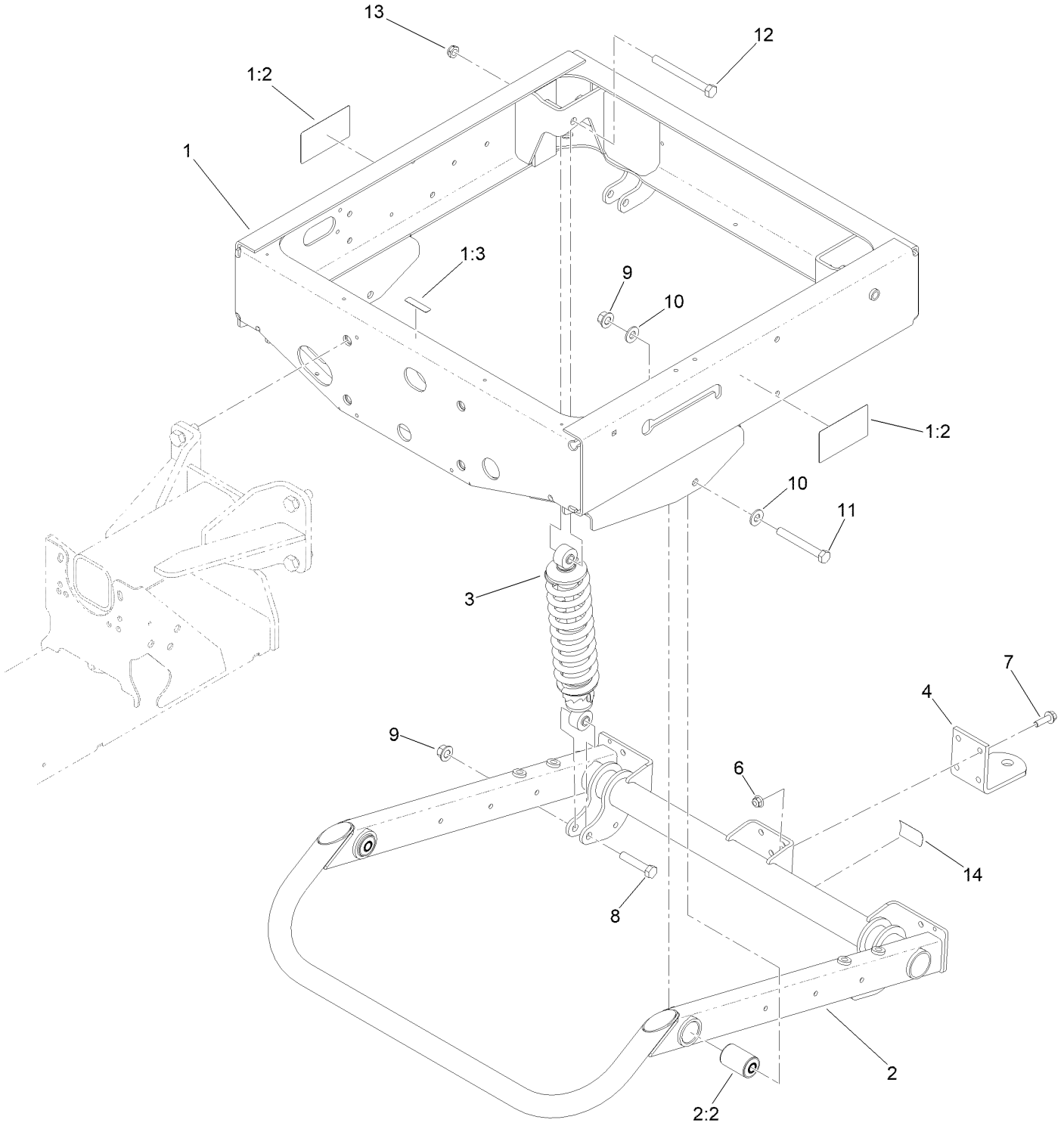

Rear Frame and Suspension Assembly (continued)

Ref.	Part Number	Qty.	Description
1	147-3869	1	Rear Frame ASM
1:2	147-4081	2	Decal-Safety MDX-Lithium, Rear
1:3	120-9570	1	Decal-Warning
2	147-3866	1	Swing Arm ASM
2:2	112-3377	2	Bushing-Arm, Control
3	133-0553	2	Shock And Spring ASM
4	99-7654-03	1	Hitch-Duty, Light
6	104-8301	4	Nut-HF, NI
7	3234-24	4	Screw-HHF
8	325-10	2	Screw-HH
9	99-5107	4	Nut-HF Nylock
10	87-7270	4	Washer-Thrust
11	325-17	2	Screw-HH
12	325-19	2	Screw-HH
13	3296-45	2	Nut-Hex
14	136-1164	1	Decal-Load, Towing

Front Brake Assembly

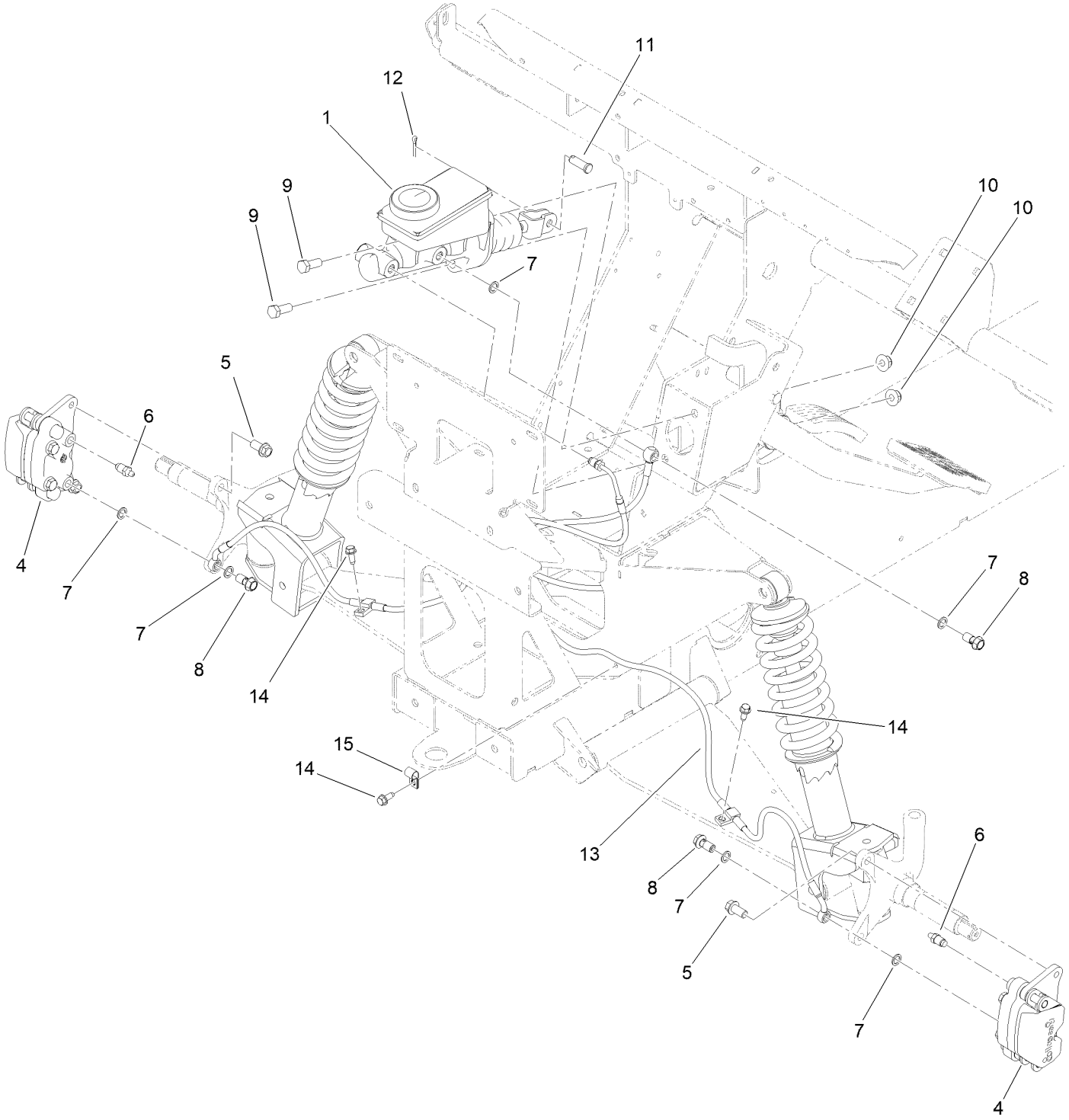

Front Brake Assembly (continued)

Ref.	Part Number	Qty.	Description
1	104-6782	1	Master Cylinder ASM
4	161-1890	2	Brake Caliper ASM
5	144-5550	4	Screw-Spl
6	119-9509	2	Screw-Bleed
7	115-2341	6	Washer-Banjo
8	120-4875	3	Bolt-Flange, Banjo
9	323-6	2	Screw-HH
10	104-8301	2	Nut-HF, NI
11	283-2	1	Pin-Clevis
12	3272-10	1	Pin-Cotter
13	132-6793	1	Line-Brake, Front
14	32144-10	4	Screw-HWH
15	2412-89	1	Clamp-R

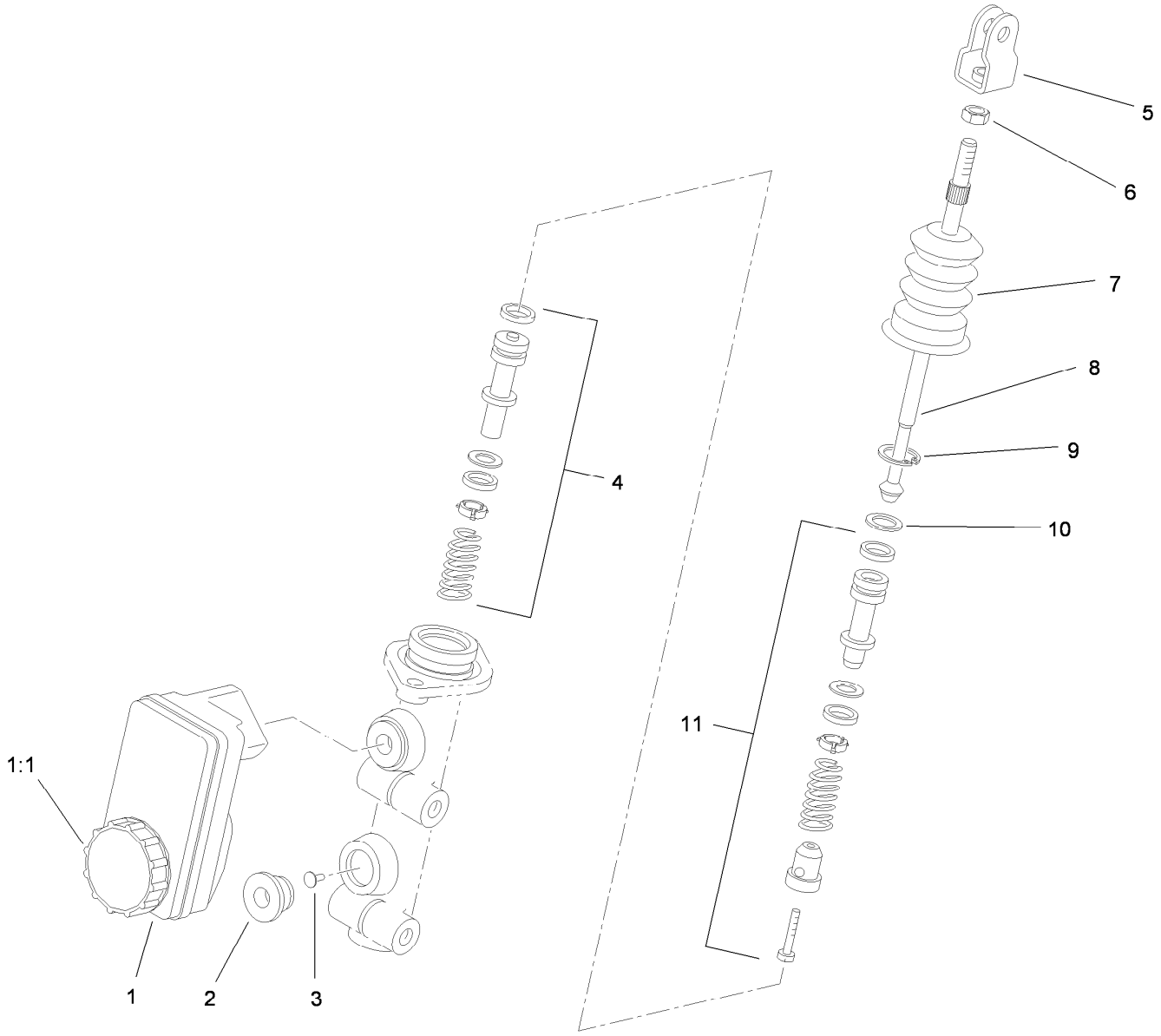

Master Cylinder Assembly No. 104-6782

Ref.	*Part Number*	*Qty.*	*Description*
1	104-6845	1	Reservoir ASM
1:1	92-4112	1	Cap ASM
2	93-8971	2	Seal-Port, Flange
3	92-4103	1	Pin-Stop
4	92-4102	1	Secondary Piston ASM
5	92-4110	1	Clevis
6	21-0360	1	Nut-Hex
7	94-5209	1	Cover-Dust
8	94-5210	1	Rod-Push
9	92-4109	1	Ring-Snap
10	92-4108	1	Retainer-Washer
11	92-4101	1	Primary Piston ASM

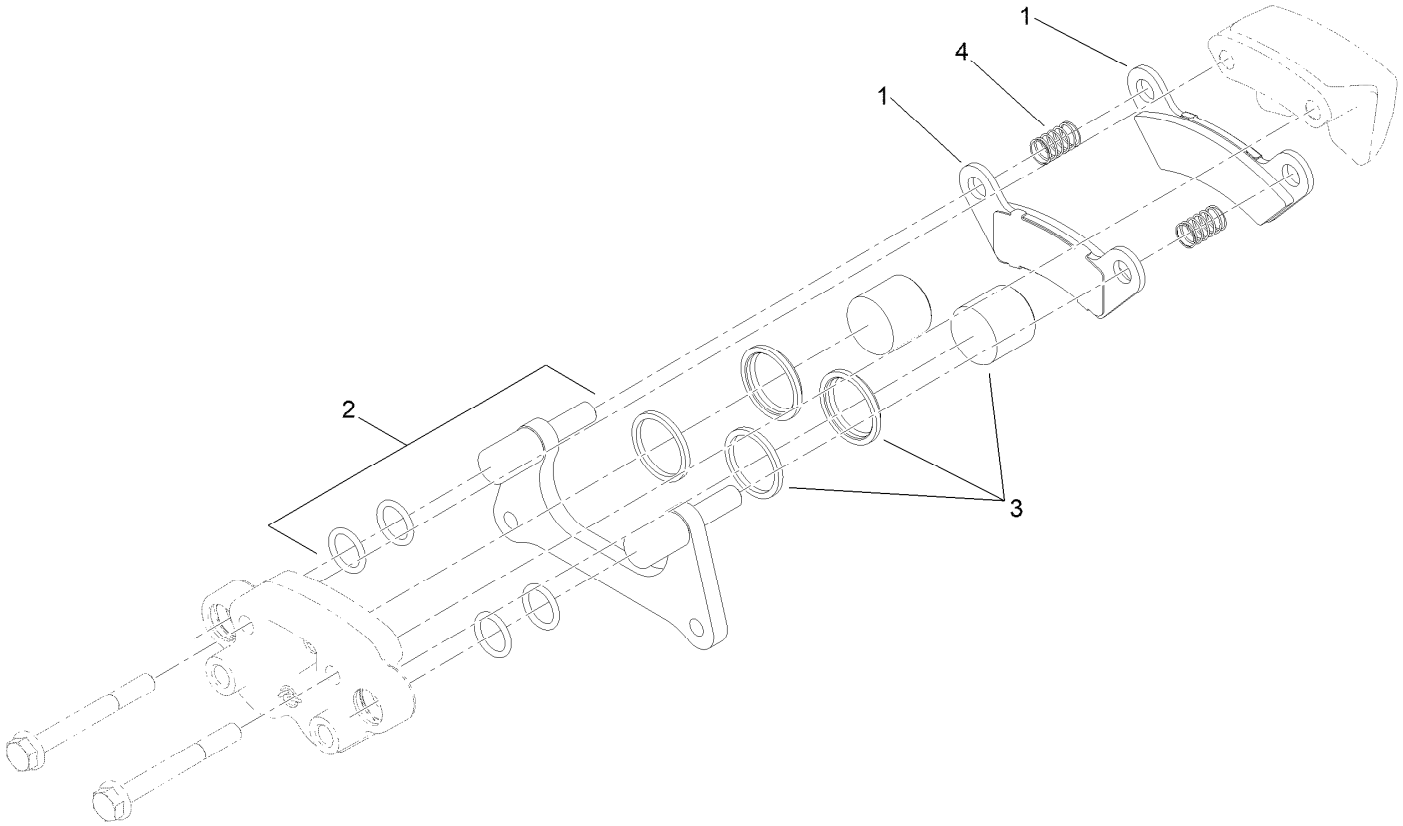

Brake Caliper Assembly No. 161-1890

Ref.	*Part Number*	*Qty.*	*Description*
1	140-2580	1	Brake Pad Service Kit (Front, Qty 4)
2	119-9511	1	Bracket Kit
3	133-0614	1	Piston Kit
4	161-1889	2	Spring-Compression, Service

Rear Brake Assembly

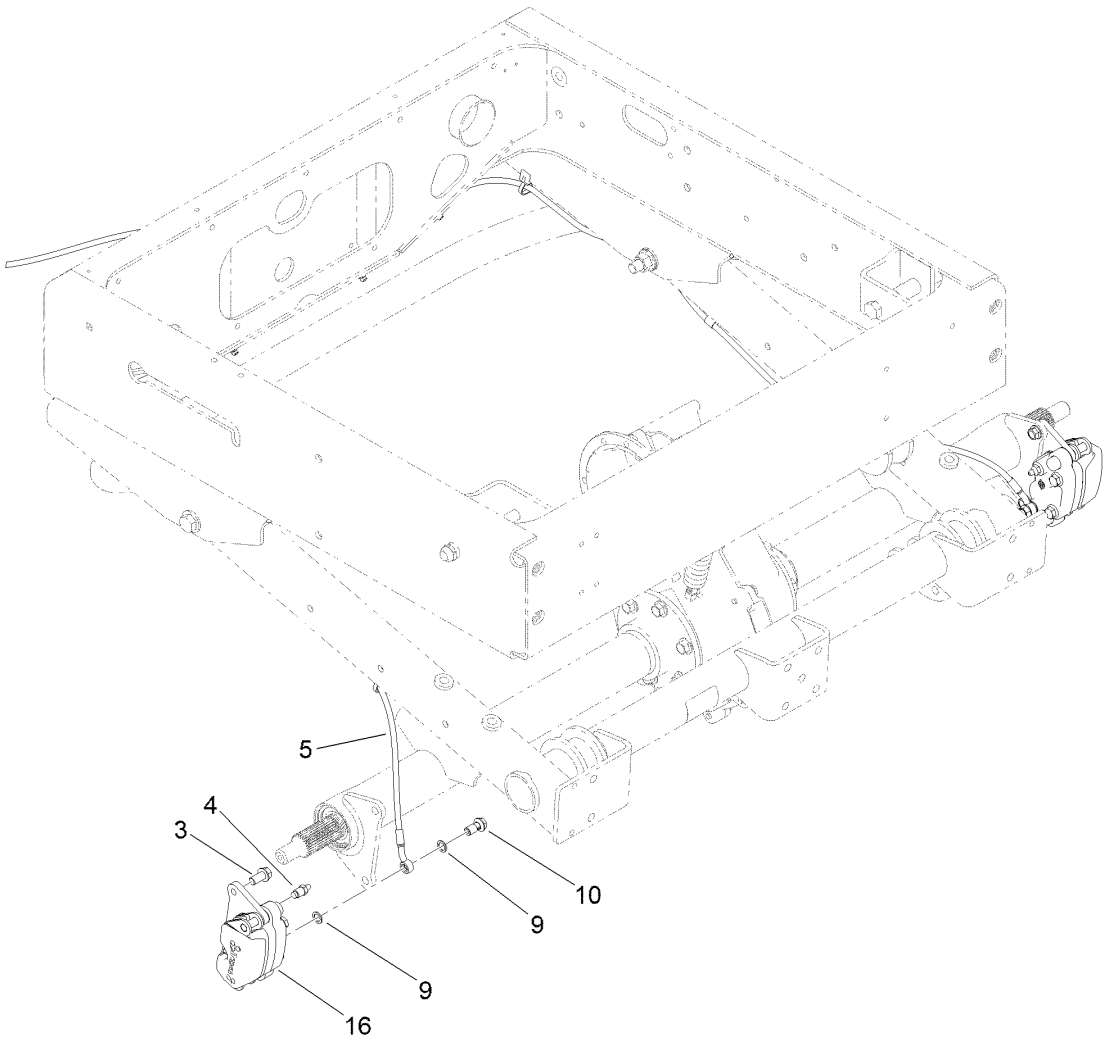

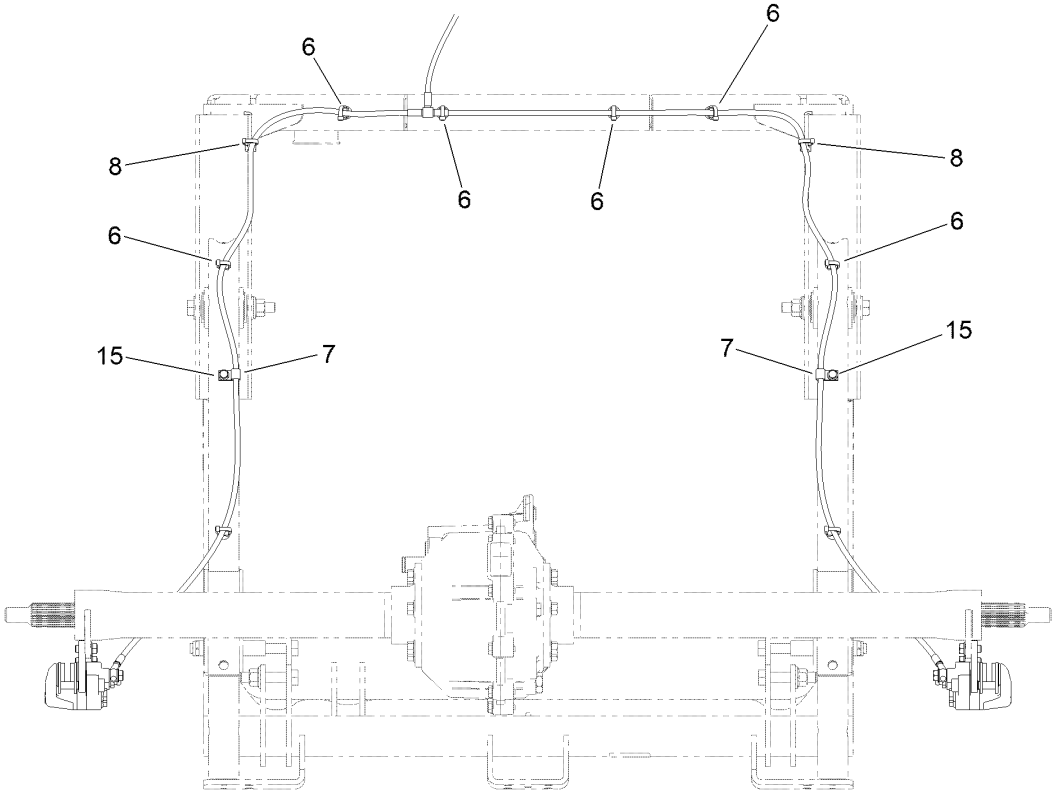

Rear Brake Assembly (continued)

Ref.	Part Number	Qty.	Description
3	144-5550	4	Screw-Spl
4	119-9509	2	Screw-Bleed
5	147-3897	1	Brake Line ASM, Rear
6	32180-030	8	Clip-Tie
7	2412-89	2	Clamp-R
8	32180-082	2	Clip-Edge W/Tie, Perpendicular
9	115-2341	4	Washer-Banjo
10	120-4875	2	Bolt-Flange, Banjo
15	32144-10	2	Screw-HWH
16	161-1890	2	Brake Caliper ASM

Steering Assembly

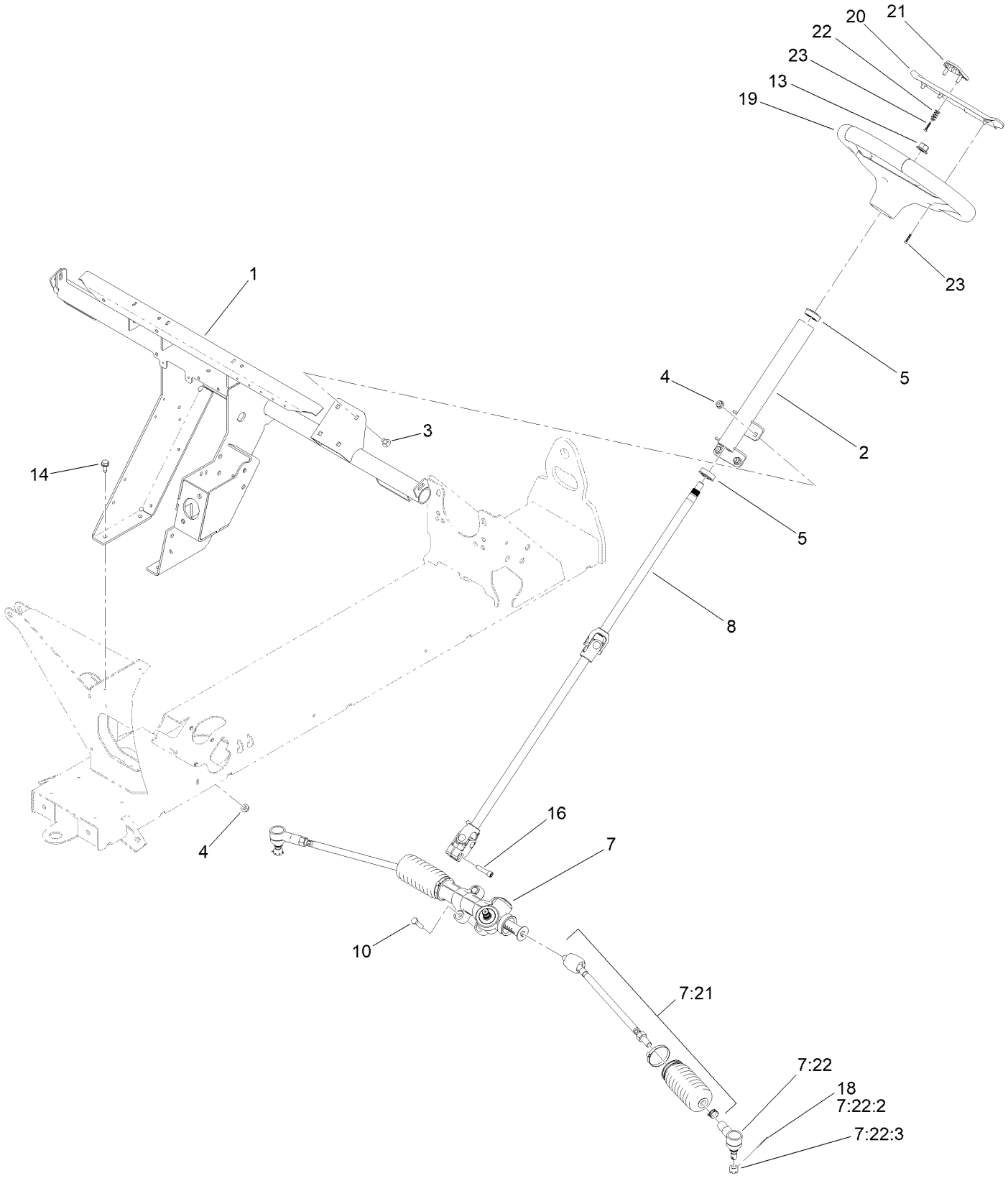

Steering Assembly (continued)

Ref.	Part Number	Qty.	Description
1	147-3840-03	1	Dash Support ASM [black]
2	147-8045	1	Steering Column ASM,MDX
3	3230-1	4	Bolt-CARR
4	104-8300	8	Nut-HF, NI
5	112-3262	2	Bearing
7	140-4560	1	Steering Rack ASM
7:21	140-4594	1	Kit-Tie Rod ASM, MDX
7:22	140-4592	1	Kit-Rod End ASM
7:22:2	3272-42	1	Pin-Cotter
7:22:3	140-2493	1	Nut-Hex, Slotted
8	145-2051	1	Steering Shaft ASM
10	322-6	4	Screw-HH
13	99-5107	1	Nut-HF Nylock
14	32144-70	4	Screw-HWHTF
16	145-7145	1	Screw-HSH,Lock
18	3272-42	2	Pin-Cotter
19	144-5570	1	Steering Wheel ASM
20	144-5567	1	Cover-Wheel, Steering
21	144-5566	1	Clip-Wheel, Steering
22	144-5537	2	Spring-Compression
23	94-4496	5	Screw-PPH

Accelerator and Brake Pedal Assembly

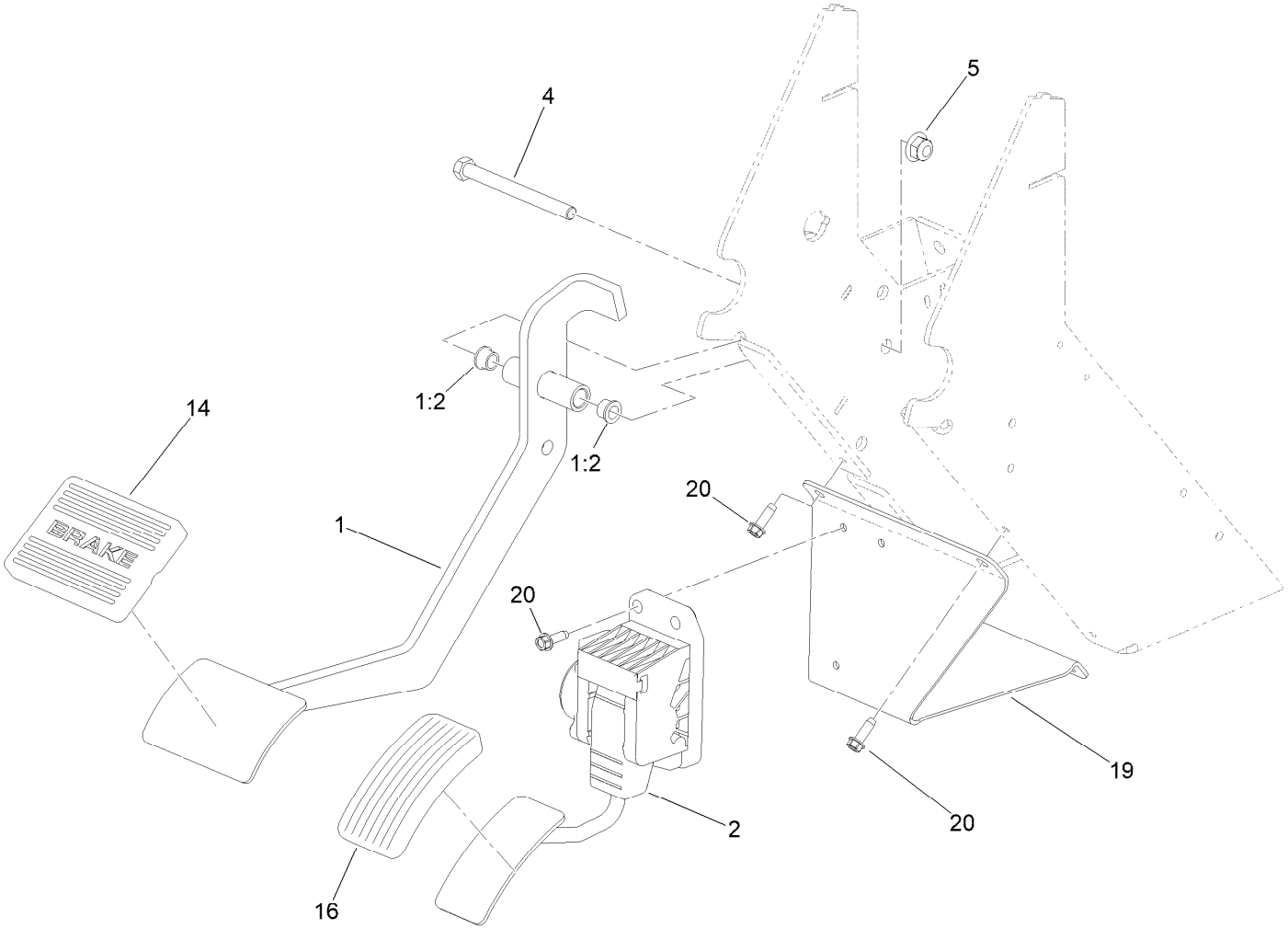

Accelerator and Brake Pedal Assembly (continued)

Ref.	Part Number	Qty.	Description
1	147-4078	1	Brake Pedal ASM
1:2	256-116	2	Bushing-Flange
2	144-2740	1	Pedal ASM-Accelerator
4	323-16	1	Screw-HH
5	104-8301	1	Nut-HF, NI
14	7-3900	1	Pad-Brake
16	140-4572	1	Pedal Pad-Throttle
19	147-3830-03	1	Bracket-Pedal, Accelerator
20	49-2040	7	Screw-HWHTF

Hood and Fenders Assembly

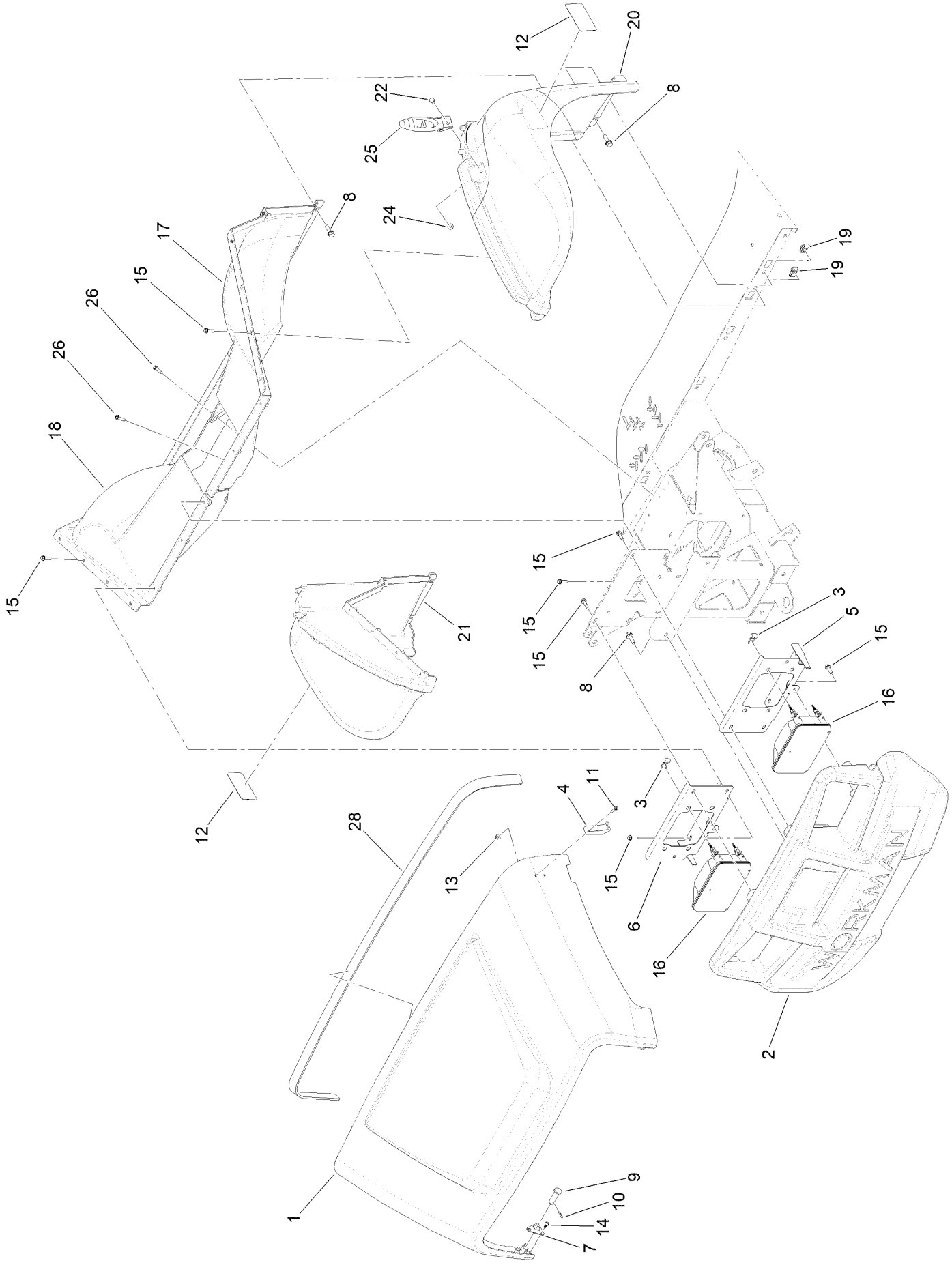

Hood and Fenders Assembly (continued)

Ref.	Part Number	Qty.	Description
1	136-6281	1	Hood
2	132-8530	1	Bumper
3	115-2408	6	Clip-Speed
4	103-2897	2	Latch-Catch
5	140-4780-0P	1	Bracket-Headlight, LH
6	140-4781-0P	1	Bracket-Headlight, RH
7	112-3308	2	Retainer-Pin
8	3234-29	12	Screw-HHF
9	117-5094	2	Pin-Clevis
10	32121-50	2	Pin-Spring
11	32105-13	4	Screw-HWH
12	147-3924	2	Decal-Fender, MDX, Lithium
13	120-4578	4	Nut-HF
14	121-9605	6	Screw-HWH
15	46-8091	24	Screw-HWH
16	138-9260	2	Headlight ASM
17	132-6775	1	Fender-Inner, LH
18	132-6776	1	Fender-Inner, RH
19	112-3306	10	Nut
20	147-3947	1	Fender-Front, LH (MDX)
21	147-3946	1	Fender-Front, RH (MDX)
22	321-39	2	Screw-HH
24	104-7201	2	Nut-HF, NI
25	115-2416	2	Latch-Rubber
26	49-2040	4	Screw-HWHTF
28	115-7635	1	Seal-Foam

Dash Assembly

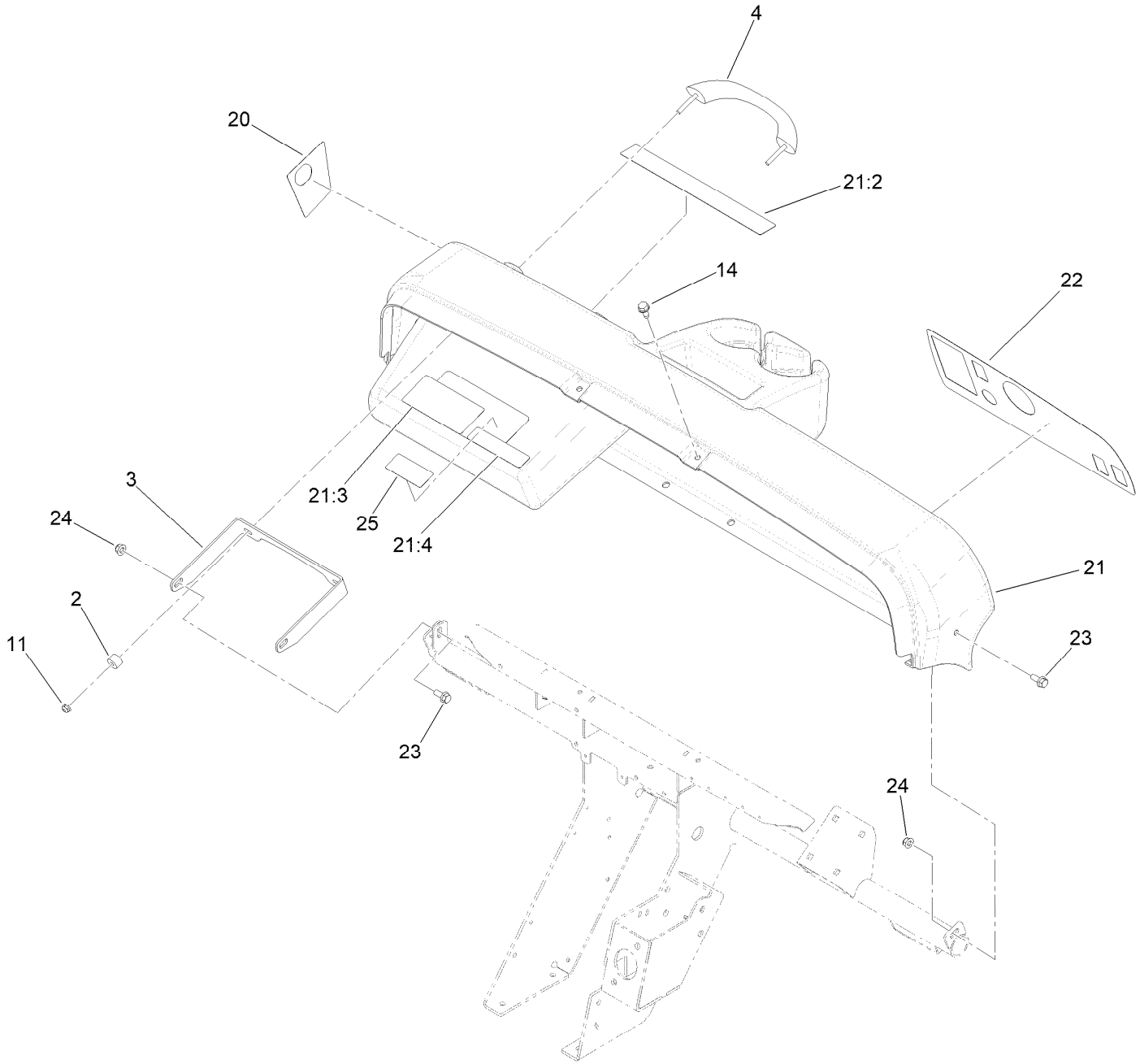

Dash Assembly (continued)

Ref.	Part Number	Qty.	Description
2	114-8301	2	Spacer (Mty)
3	112-3391-0P	1	Bracket-Grip Handle
4	112-3320	1	Handle-Grip
11	104-7201	2	Nut-HF, NI
14	32144-70	6	Screw-HWHTF
20	147-8185	1	Decal-USB
21	147-3811	1	Dash-MDX Lithium, Service
21:2	147-4080	1	Decal-Safety MDX-Lithium
21:3	115-2412	1	Decal-No Storage
21:4	147-4085	1	Decal-Safety Voltage/Fuse Block
22	147-3846	1	Decal-Control Panel, MDX-Li
23	110-5053	3	Screw-HHF
24	104-8300	3	Nut-HF, NI
25	147-4084	1	Decal-Service, MDX Li+

Seatbase Assembly

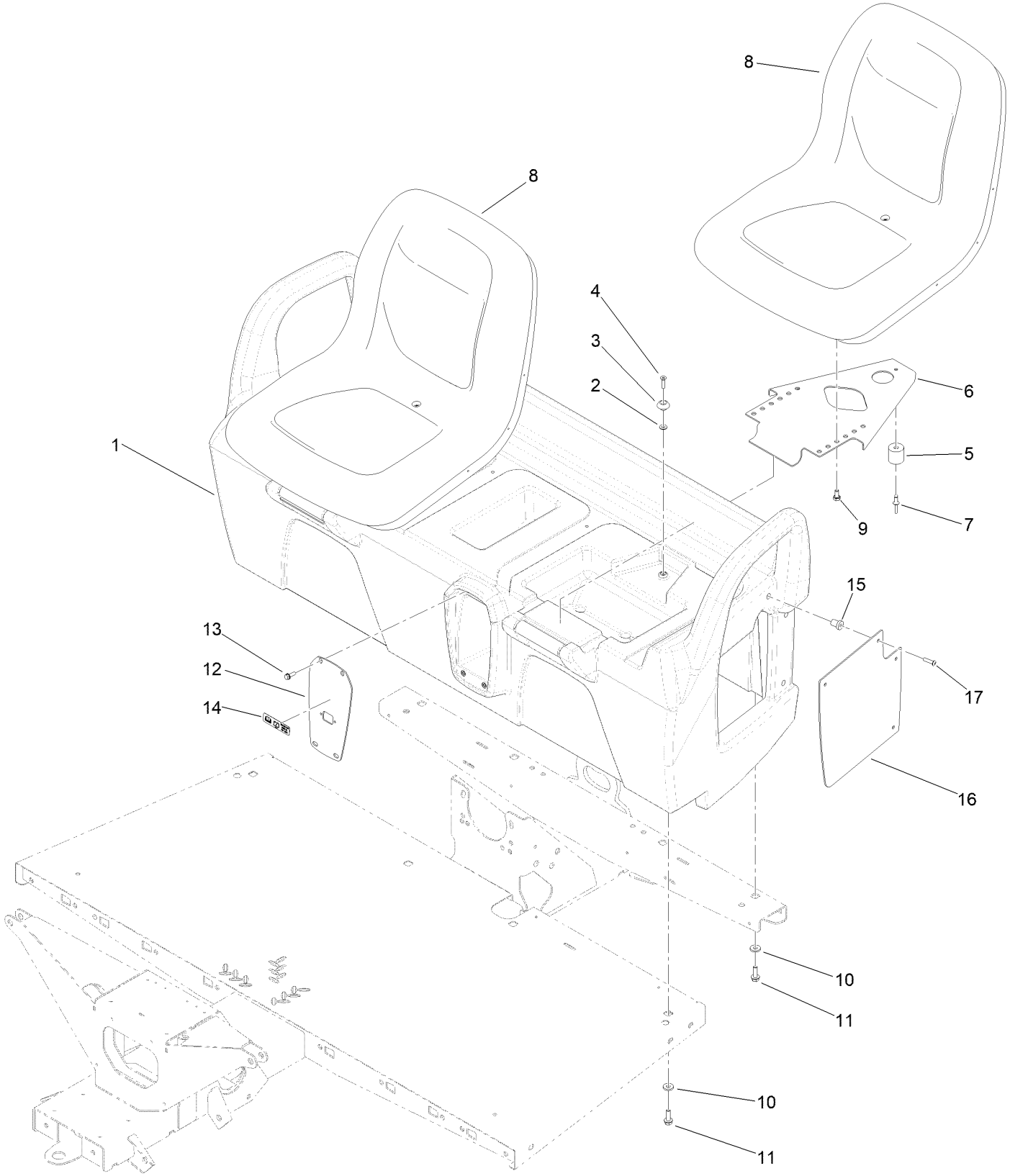

Seatbase Assembly (continued)

Ref.	Part Number	Qty.	Description
1	147-3831	1	Seat Base ASM
2	3256-1	2	Washer-Flat
3	99-7833	2	Post-Holding
4	32108-5	2	Screw-FH
5	99-7830	2	Receptical-Rubber
6	99-7829	2	Bracket-Seat
7	3290-412	2	Rivet-Blind
8	133-0577	2	Seat ASM
9	33114-016	8	Screw-HH
10	88-7200	8	Washer-Flat
11	3234-17	8	Screw-HHF
12	145-7126-05	1	Plate-Receptacle
13	32105-15	4	Screw-HWH
14	140-4590	1	Decal-Charger Input Lithium
15	32117-1	4	Nut-Insert
16	145-7127-05	1	Panel-Side
17	3274-65	4	Screw-HSBH

Cargo Bed Assembly

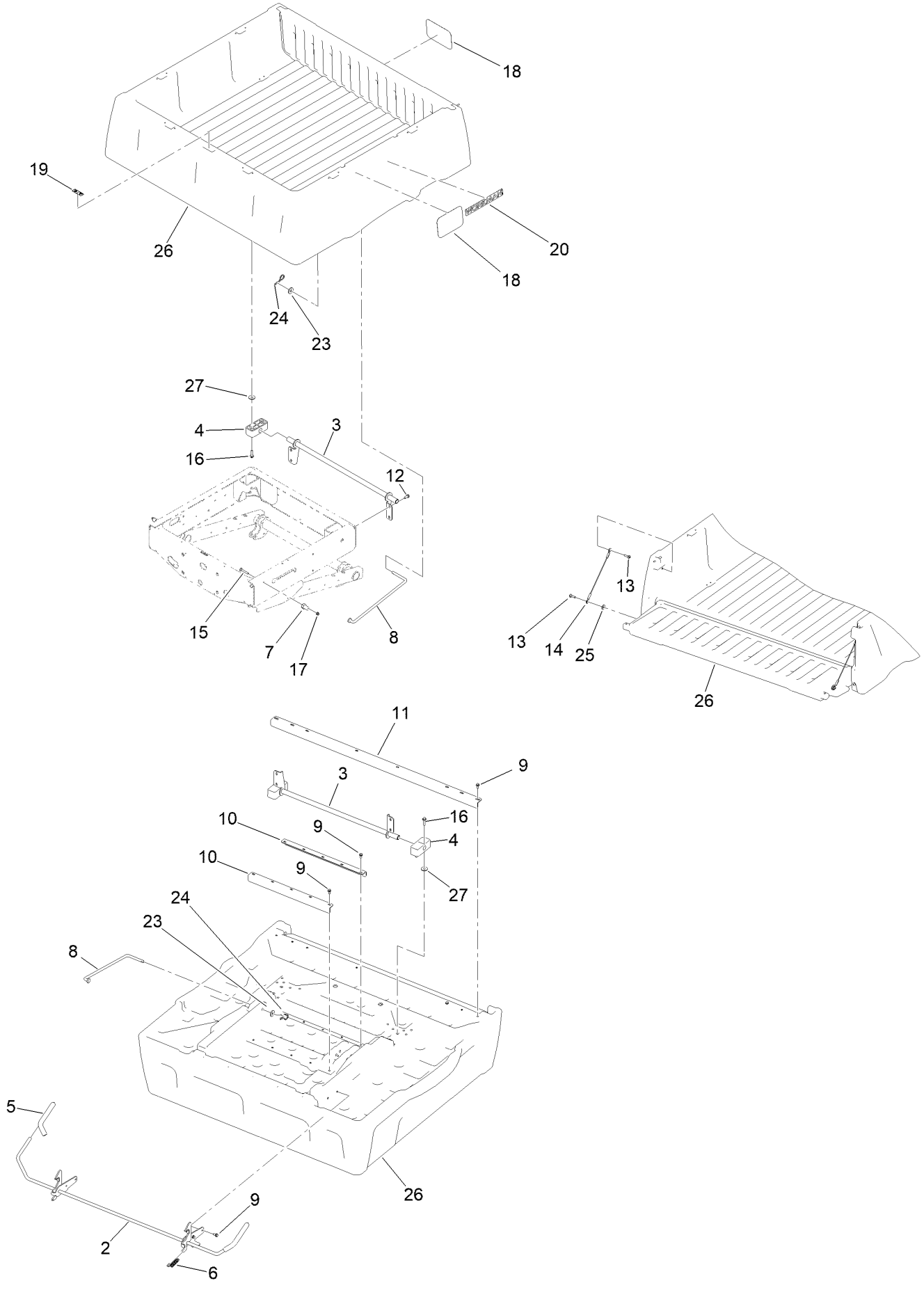

Cargo Bed Assembly (continued)

Ref.	Part Number	Qty.	Description
2	121-6344	1	Latch
3	133-0625-03	1	Bracket-Pivot
4	121-6342	2	Bushing-Pivot
5	119-9627	2	Grip-Handle
6	5-7290	2	Spring-Tension
7	144-2191	2	Pin-Latch
8	121-6316	1	Rod-Prop
9	3234-5	20	Screw-HHF
10	121-6314-0P	2	Brace-Middle, Bed
11	121-6315-0P	1	Brace-Rear, Bed
12	126-1696	4	Screw-HWHTF
13	119-2267	4	Screw-Shoulder, BHTF
14	121-6343	2	Lanyard-Tailgate
15	3230-7	2	Bolt-CARR
16	3234-18	4	Screw-HHF
17	104-8300	2	Nut-HF, NI
18	104-7213	3	Decal
19	115-7739	1	Decal-No Riders
20	140-4835	2	Decal-Workman, Gray
23	110-6147	1	Washer-Flat
24	107-3155	1	Hairpin
25	115-7109	2	Washer-Flat
26	147-4026	1	Cargo Bed/Tailgate ASM [svc]
27	87-5330	4	Washer

Cargo Bed Service Assembly No. 147-4026

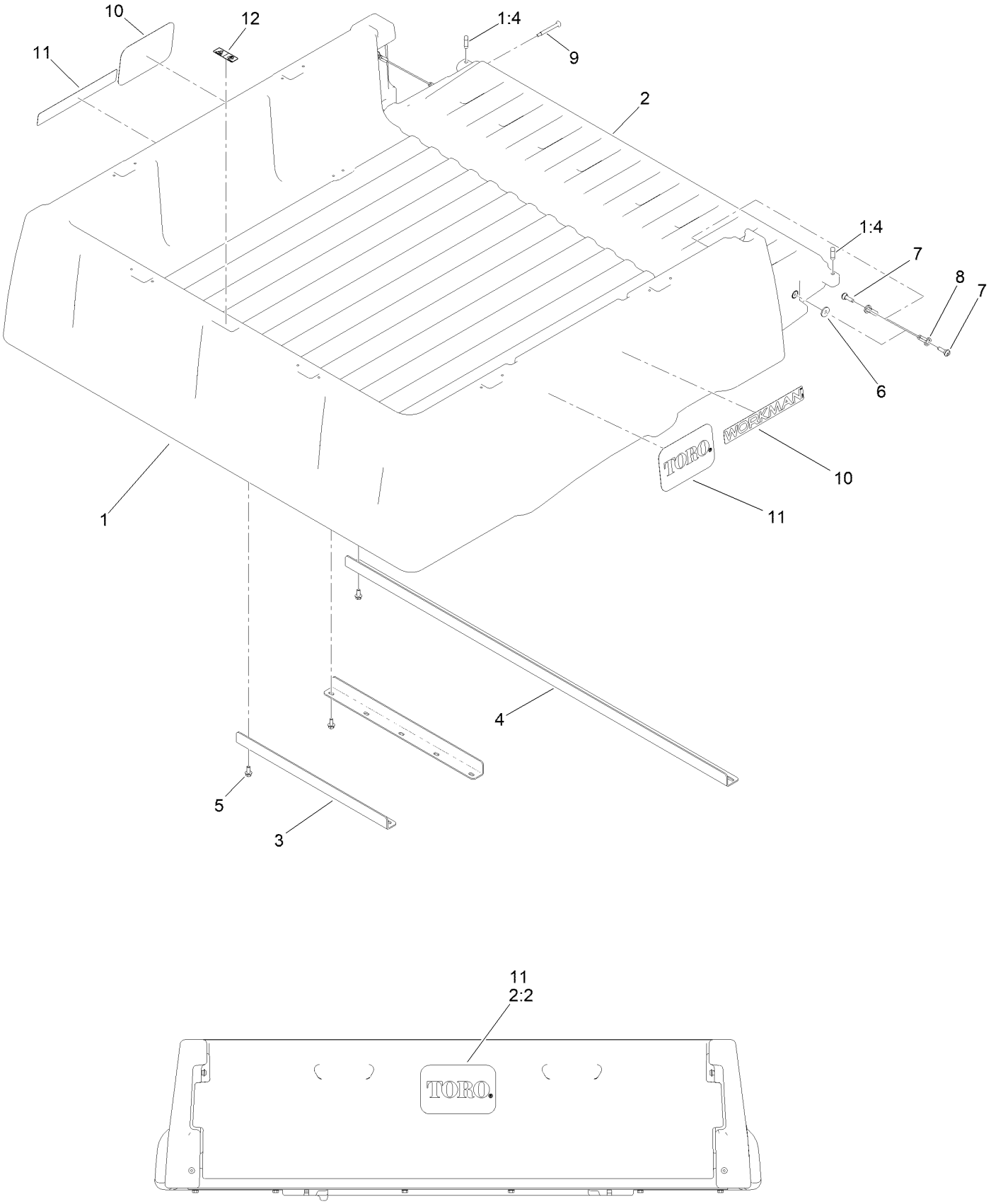

Cargo Bed Service Assembly No. 147-4026 (continued)

Ref.	Part Number	Qty.	Description
1		1	Cargo Bed And Tailgate ASM ●
1:4	133-7146	2	Plug-Tailgate, Anti-Rattle
2	133-0561	1	Tailgate ASM W/Decals
2:2	104-7213	1	Decal
3	121-6314-0P	2	Brace-Middle, Bed
4	121-6315-0P	1	Brace-Rear, Bed
5	3234-5	16	Screw-HHF
6	115-7109	2	Washer-Flat
7	119-2267	4	Screw-Shoulder, BHTF
8	121-6343	2	Lanyard-Tailgate
9	127-7383	2	Screw-Shoulder, Bh (Torx)
10	140-4835	2	Decal-Workman, Gray
11	104-7213	3	Decal
12	115-7739	1	Decal-No Riders

● Not serviced separately

Battery and Transaxle Assembly

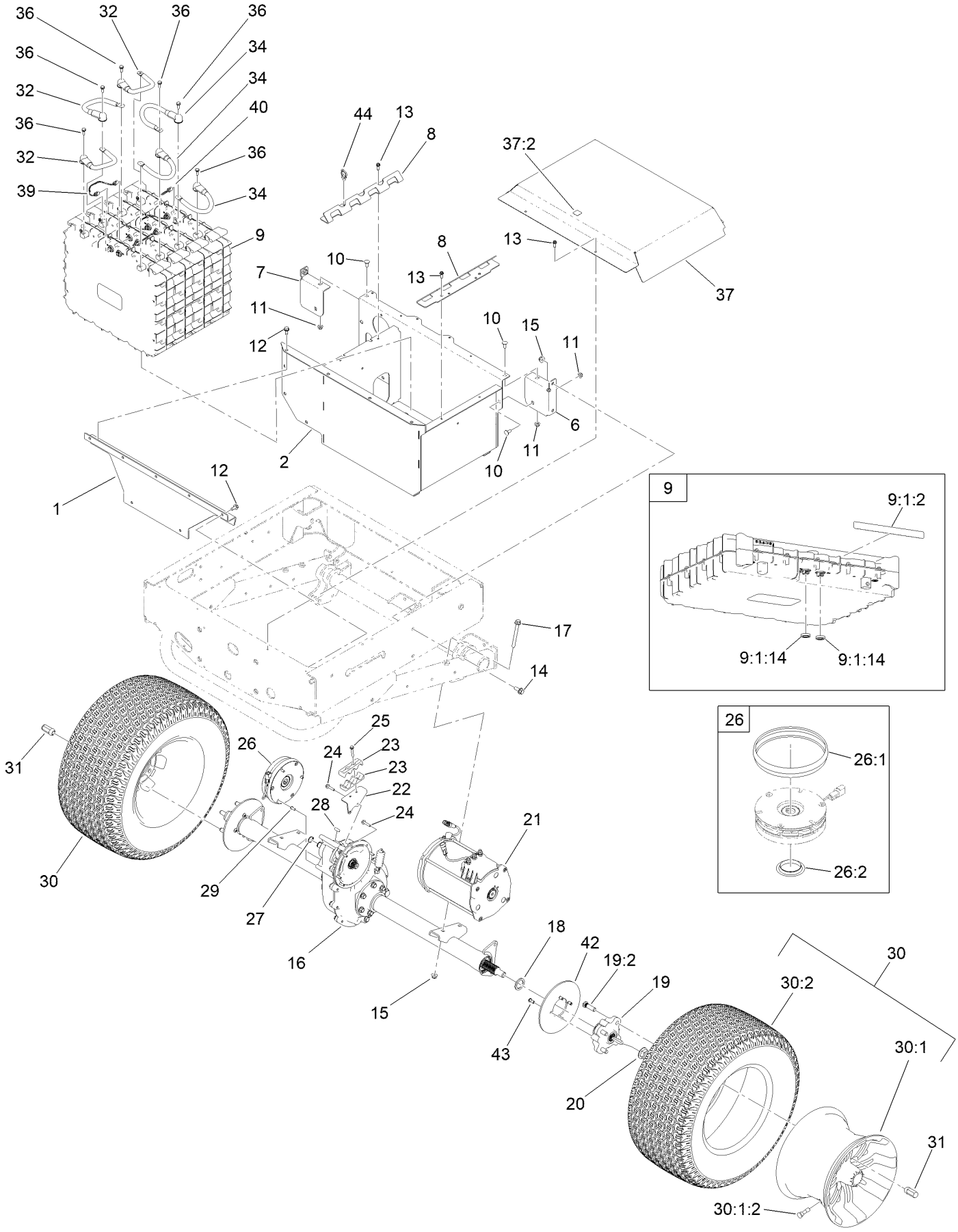

Battery and Transaxle Assembly (continued)

Ref.	Part Number	Qty.	Description
1	147-3853-0P	1	Bracket-Support, Front
2	147-3979-0P	1	Box-Battery [primed]
6	147-3852-0P	1	Bracket-Support, Left
7	147-3854-0P	1	Bracket-Support, Right
8	147-3806-0P	2	Hold Down, Battery
9	145-5385	4	Battery ASM
9:1:2	145-5338	1	Decal-Warning, Battery
9:1:14	32180-466	2	Nut-Mounting, Jwpf Panel Lock
10	3230-23	3	Bolt-CARR
11	104-8300	3	Nut-HF, NI
12	32144-70	11	Screw-HWHTF
13	49-2040	8	Screw-HWHTF
14	3234-42	4	Screw-HHF
15	104-8301	8	Nut-HF, NI
16	147-3858	1	Transaxle ASM
17	116-4701	4	Screw-HHF
18	144-2444	2	Spacer-Hardened
19	145-7151	2	Rear Hub ASM
19:2	10-6830	4	Stud-Type, Drive
20	32128-53	2	Nut-HF
21	137-6936	1	Motor-AC
22	147-3859-0P	1	Bracket-Clamp, Cable
23	145-7166	2	Clamp-Cable
24	33103-030	6	Screw-HHF
25	94-2691	2	Screw-HWH Taptite
26	145-7061	1	Brake-Electric
26:1	145-7184	1	Dust Cover
26:2	145-7186	1	End Cap
27	32120-15	1	Ring-Snap, EXT
28	145-7163	1	Key-Square
29	145-7164	3	Screw-HSBH
30	147-3970	2	Wheel And Tire ASM
30:1	147-3967	1	Wheel-Aluminum
30:1:2	232-27	1	Stem-Valve
30:2	116-8296	1	Tire-Drive
31	139-3603	8	Nut-Lug
32	145-7182	3	Cable-Battery,Rd ASM
34	145-7183	3	Cable-Battery,Bk ASM
36	145-5783	6	Screw-Sems
37	147-4079	1	Battery Cover ASM
37:2	145-7345	1	Decal-Voltage, High
39	140-9565	3	Harness-Wire, Data Interface
40	122-2323	1	Harness-Wire, Can Terminator
42	139-4474	2	Rotor-Brake
43	121-9671	8	Screw-HSBH,Patch
44	32180-030	2	Clip-Tie

Transaxle Assembly No. 147-3858

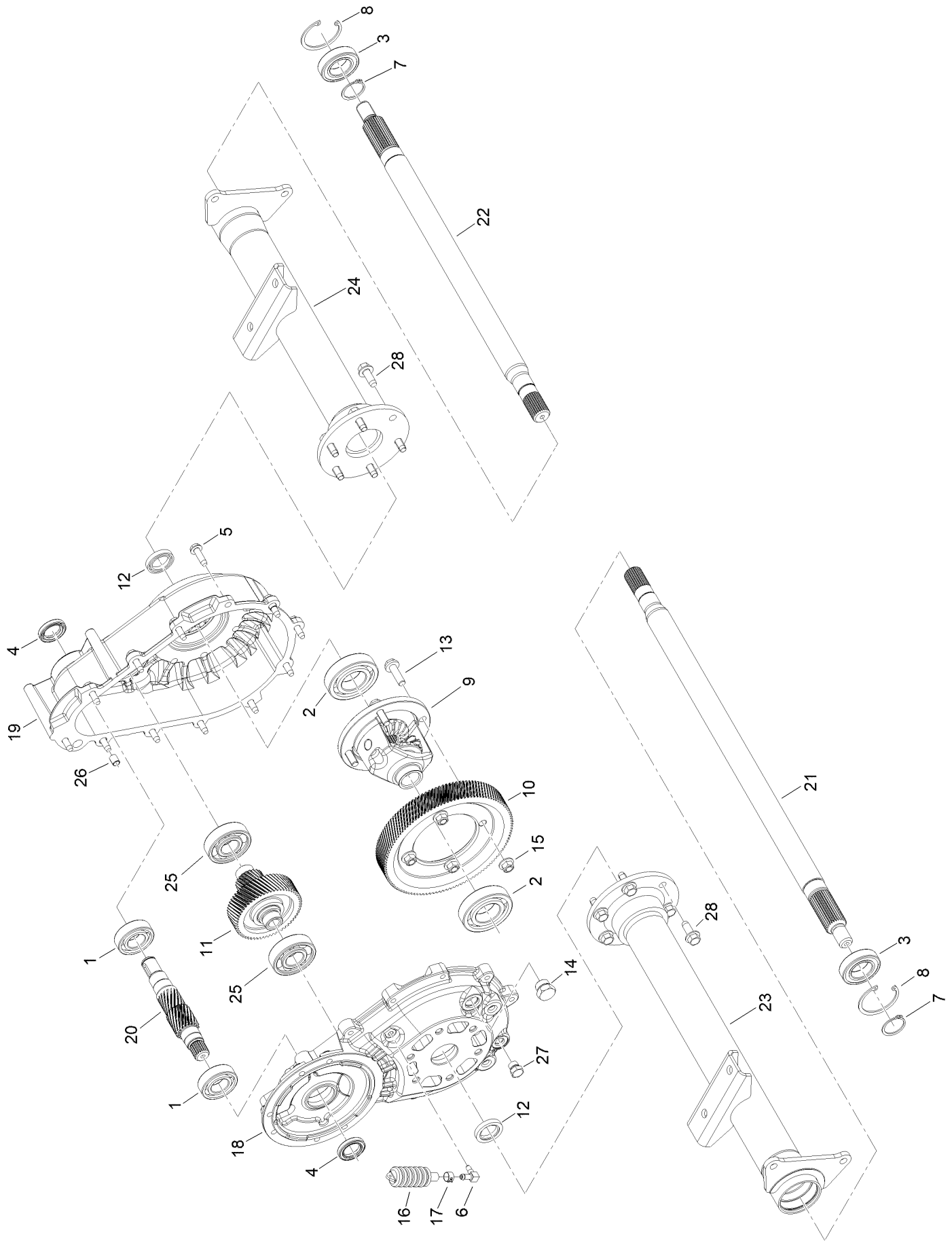

Transaxle Assembly No. 147-3858 (continued)

Ref.	Part Number	Qty.	Description
1	145-7286	2	Bearing, Ball, Single Row, 6205
2	145-7287	2	Bearing, Ball, Single Row, 6207
3	147-4094	2	Bearing,Ball,Single Row,6006-2Rs,Sealed
4	145-7289	2	Seal, Oil, .945 Shaft, 1.499 Bore
5	147-4095	12	Screw, Hex Head, 5/16-18, Thread Forming
6	147-4096	1	Tube, Vent
7	147-4097	2	Ring, Retaining, External, 30MM Shaft
8	147-4098	2	Ring, Retaining, Internal, 55MM Bore
9	147-4099	1	Assembly, Differential Case, Heavy Duty
10	145-7291	1	Gear, Helical, Output, Finish, 116T
11	145-7292	1	Assembly, Shaft And Gear, Intermediate
12	145-7293	2	Seal, Oil, 25 MM Shaft, 1.499 Bore
13	133-2462	4	Bolt-HHF
14	145-7319	1	Plug, Hex Head, 3/4-16 Strt Thr, O-Ring
15	133-2463	4	Nut-Lock
16	145-7294	1	Vent, Bellows
17	145-7295	1	Clamp, Hose
18	161-1800	1	Housing, Motor Side
19	161-1801	1	Housing, Cover, E-Brake
20	145-7298	1	Shaft, Input, 18T
21	161-1802	1	Shaft, Axle
22	161-1803	1	Shaft, Axle
23	161-1804	1	Tube Assembly, LH
24	161-1805	1	Tube Assembly, RH
25	145-7299	2	Bearing, Ball, Single Row, 6305
26	145-7301	2	Bushing, Dowel, .313 X .500
27	145-7302	1	Drain Plug, Magnetic, O-Ring, 1/2-20
28	161-1806	12	Screw, Flange Head, 3/8-16 X 1.00

Electric Motor Assembly No. 137-6936

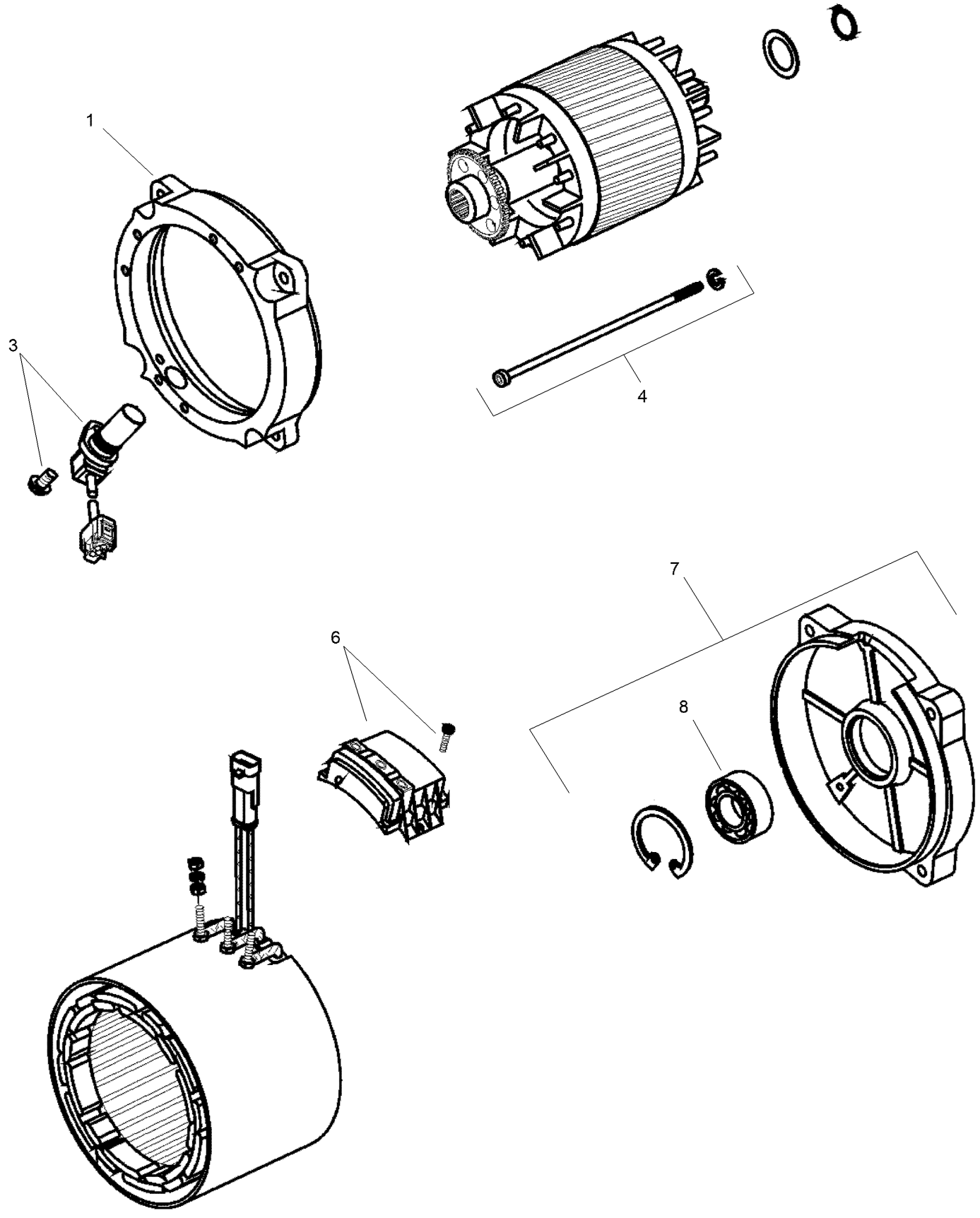

Electric Motor Assembly No. 137-6936 (continued)

Ref.	Part Number	Qty.	Description
1	132-4924	1	Bracket-End, Drive
3	132-4925	1	Sensor
4	132-4926	1	Screw
6	132-4927	1	Plate-Connection
7	132-4928	1	Bracket-End, Rear
8	132-4929	1	Bearing

Electrical Assembly

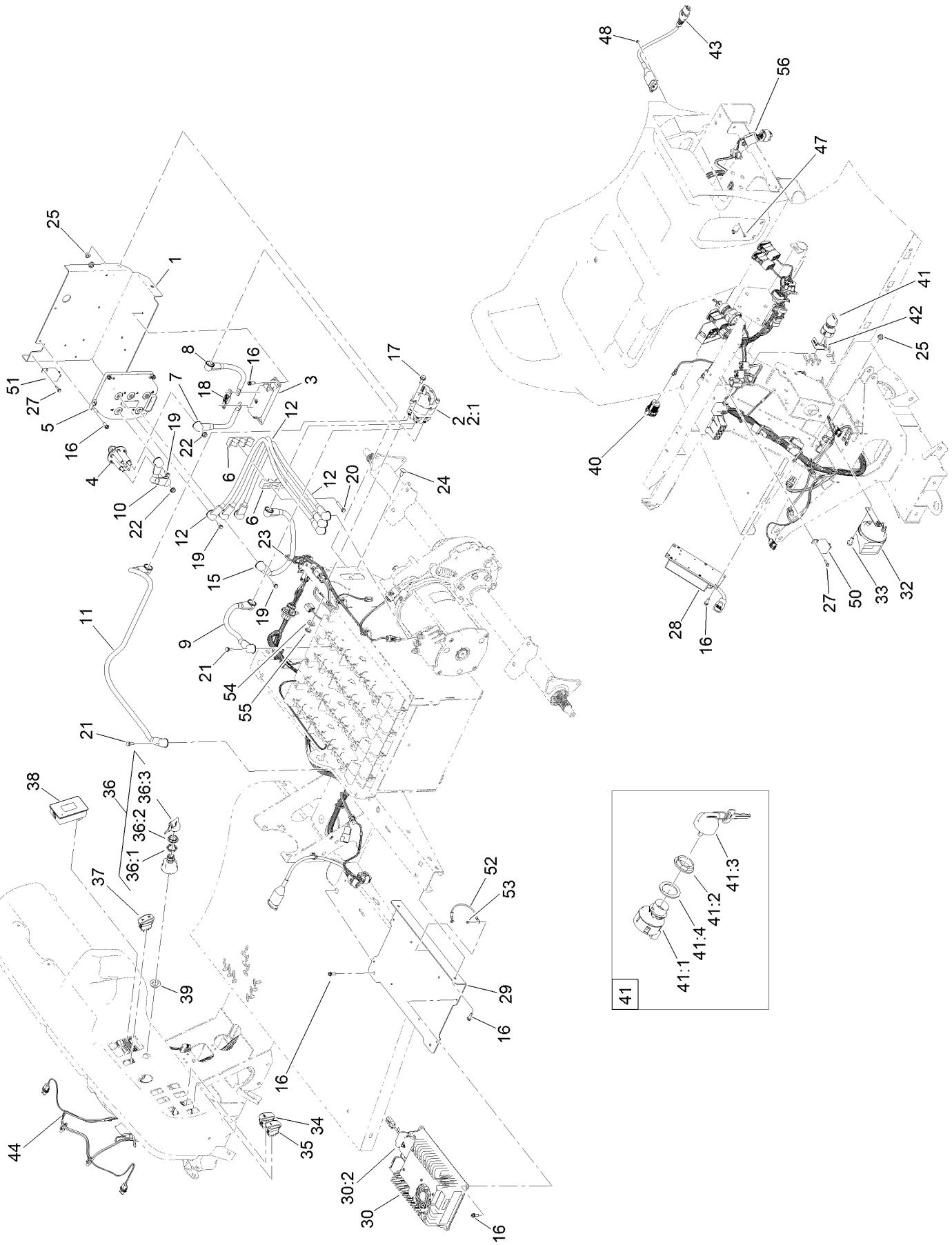

Electrical Assembly (continued)

Ref.	Part Number	Qty.	Description
1	147-3861-0P	1	Panel-Electrical, Box
2	122-0603	1	Switch-Disconnect
2:1	33006-00	1	Nut-HF
3	145-4958	1	Holder-Fuse
4	122-2616	1	Contactor-Powerseal
5	145-5050	1	Inv/Ctrlr-48V,185Arms
6	145-7166	2	Clamp-Cable
7	147-3873	1	Cable-Battery, Rd ASM
8	147-3874	1	Cable-Battery, Rd ASM
9	145-7277	1	Cable-Battery,Rd ASM
10	145-7173	1	Cable-Battery,Rd ASM
11	147-3982	1	Cable-Battery,Bk ASM
12	145-7279	3	Cable-Battery,Rd ASM
15	145-7179	1	Cable-Battery,Bk ASM
16	49-2040	18	Screw-HWHTF
17	32144-70	2	Screw-HWHTF
18	122-2630	1	Fuse-250A
19	145-5782	5	Screw-Sems
20	94-2691	2	Screw-HWH Taptite
21	145-5783	2	Screw-Sems
22	107-0380	2	Nut-HF
23	32180-030	2	Clip-Tie
24	3230-23	6	Bolt-CARR
25	104-8300	7	Nut-HF, NI
27	100-4351	4	Screw-HWH
28	144-6975	1	Converter DC-DC
29	147-3815-03	1	Bracket-Charger
30	145-1177	1	Charger-Onboard
30:2	147-3234	1	DC Harness Service Kit
32	107-0358	1	Horn
33	110-5053	1	Screw-HHF
34	144-2405	1	Switch-Rocker, On-None-On
35	144-2415	1	Switch-Rocker, (On)-None-Off
36	122-2513	1	Switch-Ignition, Suns
36:1	121-5160	1	Nut-Hex
36:2	122-2704	1	Nut-Face, M22 (Plastic)
36:3	121-5162	1	Set-Key, Ignition
37	122-2654	1	Switch-Rocker, On-None-On
38	122-2152	1	Controller, Tdm-1601
39	145-7110	1	Adapter-Switch, Key
40	131-8388	1	Socket-USB
41	110-2580	1	Switch-Key, Supervisor
41:1		1	Switch-Key ●
41:2	108-8660	1	Nut-Mounting
41:3	110-5221	1	Set-Key, Supervisor
41:4	108-8659	1	Washer-Backup
42	140-0924	1	Decal-Mode
43	145-7147	1	Cordset W/Filter
44	122-2478	1	Harness-Wire, MDX-Li
47	3249-3	2	Screw-PRH
48	3296-9	2	Nut-Hex
50	122-2400	1	Relay, 12V Coil, 50A At 48V
51	122-2401	1	Relay, 48V Coil, 50A At 48V
52	122-2792	1	Harness-Wire, Charger Bonding
53	161-1826	2	Screw-Ground
54	147-3238	4	Washer-Flat
55	HDW14457	4	Split Lock Washer,1/2,ST/ST,18-8
56	147-8183	2	Ferrite, Snap-On

● Not serviced separately

Wire Harness Assembly No. 122-2478

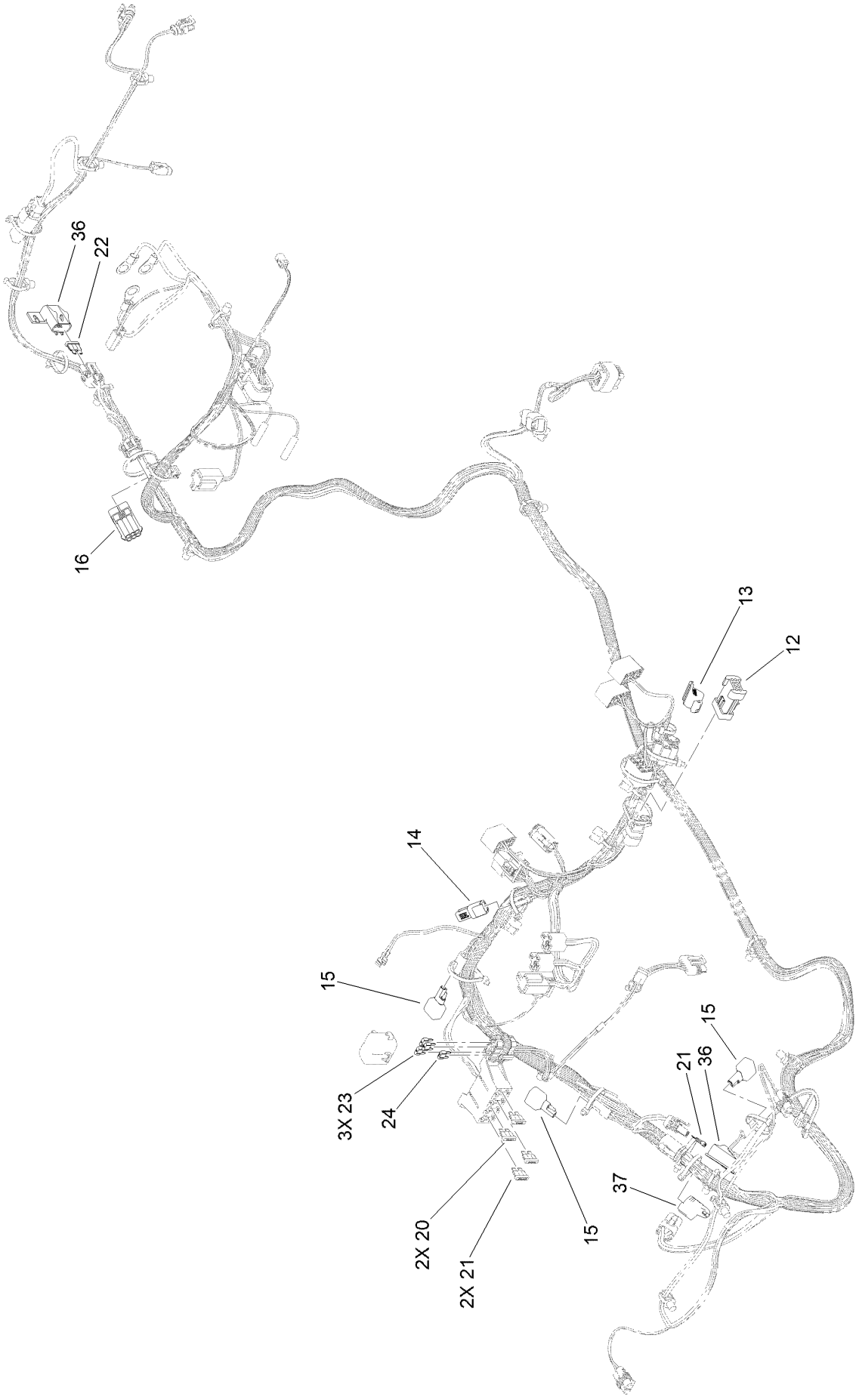

Wire Harness Assembly No. 122-2478 (continued)

Ref.	Part Number	Qty.	Description
12	32160-036	1	Connector-Mp150, 8M
13	32180-089	1	Cap-Plug, 3 Way
14	32180-282	1	Conn, Res, 120 Ohm
15	100-4918	3	Diode
16	32160-035	1	Connector
20	117-4724	2	Fuse-Blade, 10A
21	117-4726	3	Fuse-Blade, 20A
22	117-4728	1	Fuse-Blade, 30A
23	121-8864	3	Fuse-Mini Blade, 5 Amp
24	121-8865	1	Fuse-Mini Blade, 7.5 Amp
36	32180-567	2	Cover-Aptiv, Modified
37	32180-156	1	Cap-Plug, 6 Way

Attachments and Accessories

For 08303TC — Workman MDX Lithium Utility Vehicle

Product Name	Model/Part
Trash Can Mounting Kit	07028
Brush Guard Kit	07145
Front Hitch Kit, Workman GTX Series Utility Vehicles with Brush Guard	07146
Roll-Over Protection System	07276
Receiver Hitch Kit	07278
Canopy Kit	07324
Folding Windshield Kit	07326
Electric Lift Kit, MDX LI	08389
External Antenna Kit, Wireless Hourmeter System	115-9524
Base Station Kit, Wireless Hourmeter System	115-9542
Repeater Kit, Wireless Hourmeter System	115-9543
Side Mirror Kit	119-9546
Stake Pocket Adapter Kit, 2011 and After Workman MD Series Utility Vehicle	119-9604
Tie-Down Kit, 2011 and After Workman MD Series Utility Vehicle	119-9605
Hitch ASM	131-3462
Small Seat Cover	131-6690
Reverse Alarm Kit	131-8549
Power Point Kit	131-8550
Spanner Wrench	132-5069
Front Spring Kit, 2016 and After MDX or MDX-D Series Utility Vehicle	133-0630
Service Hood ASM	133-7209
Wireless Hour Meter Finish Kit	138-5698
Universal Wireless Hourmeter Kit	144-2436
Brake and Signal LED Light Kit, Workman MD Series Utility Vehicle	145-2082
Side Mirrors Kit	145-7140

Notes:



Count on it.