Form No. 3477-906 Rev B

TORO®

Count on it.

Parts Catalog

Vista®

8 Passenger Lithium Shuttle Vehicle

Model No. 08928—Serial No. 418000000 and Up

Register at www.Toro.com.
Original Instructions (EN)

CE

3477-906 B

Ordering Replacement Parts

To order replacement parts, please supply the part number, the quantity, and the description of each part desired.

Understanding Reference Numbers

Each identified part in an illustration has a reference number. The reference number for a part also appears in the parts list, along with other information about the part.

This catalog uses two special reference number formats, one to indicate parts in a service assembly and another to indicate the quantity of a given part in an illustration.

Service Assembly Reference Numbers

Parts in service assemblies have reference numbers in the form a:b. The a represents the reference number of the entire service assembly and the b represents a sequential number unique to each part within the service assembly.

For example, a wheel assembly might be identified by reference number 6, the tire by 6:1, the valve by 6:2, and the wheel by 6:3. When you order the assembly identified by reference number 6, you receive all parts identified by reference numbers 6:1,6:2, and 6:3. However, you may also order any part individually. Reference numbers of this type appear in illustration and in parts lists.

Reference Numbers Indicating Quantity

In an illustration, if a reference number indicates more than one part, the reference number has the form nX y. The n represents the quantity of the part, the X is the multiplication symbol, and the y represents the reference number.

For example, in an illustration, the reference number 2X 37 means that two of the parts identified by reference number 37 are indicated.

Contents

Frame Assembly 4
Front Suspension Assembly 6
Steering Assembly 8
Rear Suspension Assembly 10
Brake and Throttle Pedal Assembly 12
Front and Rear Brake Assembly 14
Master Cylinder Assembly No. 104-6782 16
Brake Caliper Assembly No. 161-1890 17
Hood, Front Fenders and Dash Assembly 18
Main Seat and Rear Fenders Assembly 20
Passenger Seat Assembly 22
Rear Facing Seat Assembly 24
Batteries, Motor and Transaxle Assembly 26
Transaxle Assembly No. 145-7060 28
Electric Motor Assembly No. 137-6936 30
Dash Electrical Components Assembly 32
Electrical Assembly 34
Attachments and Accessories 36

© 2026—The Toro® Company
8111 Lyndale Avenue South
Bloomington, MN 55420

Contact us at www.Toro.com.
Printed in the USA.
All Rights Reserved

Frame Assembly

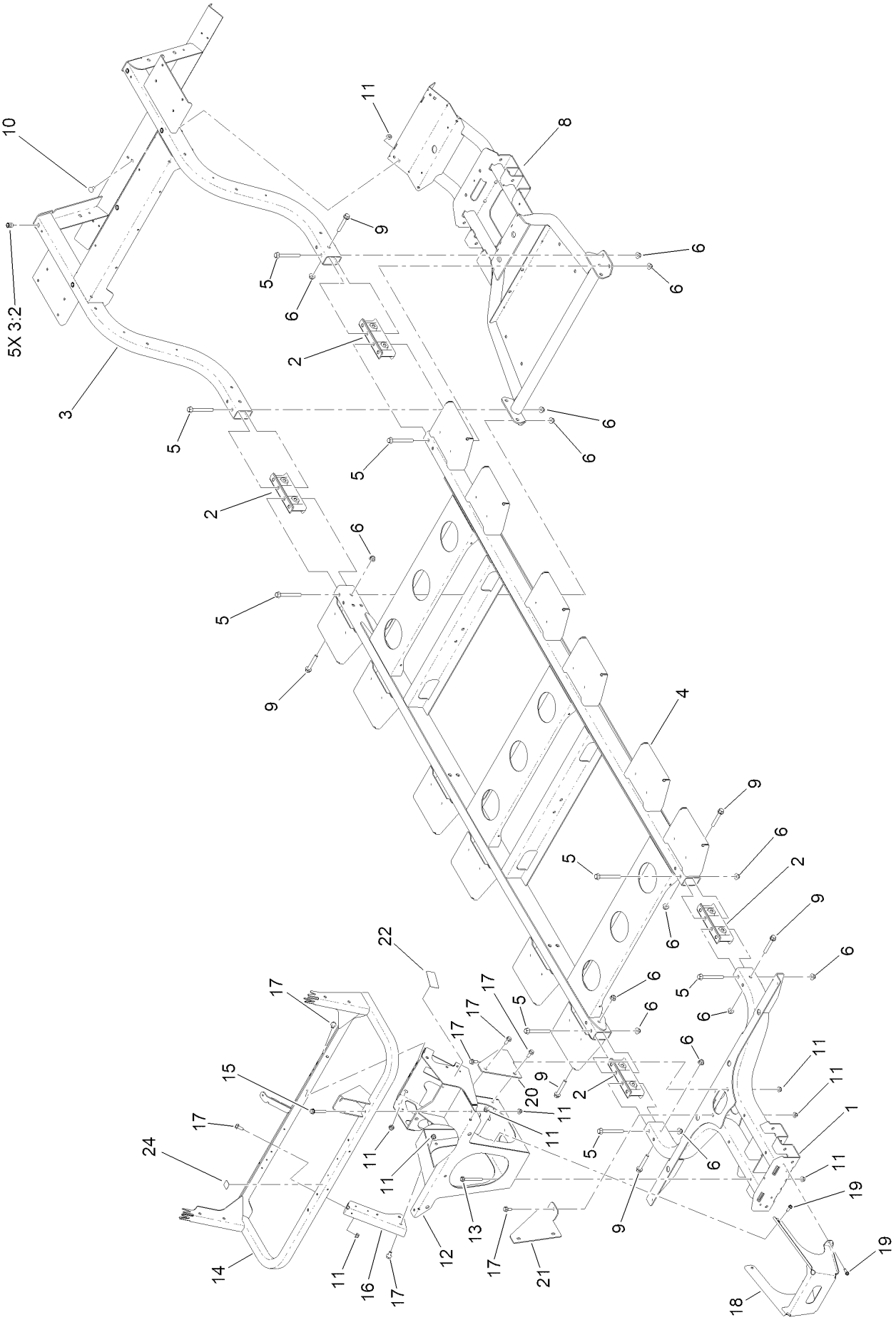

Frame Assembly (continued)

Ref.	Part Number	Qty.	Description
1	140-0797	1	Front Frame ASM
2	144-5479	4	Connector-Frame
3	144-5465	1	Rear Frame ASM
3:2	138-2899	5	Nut-Clinch
4	144-5365	1	Curved Frame ASM
5	139-3370	16	Screw-HF
6	139-3380	24	Nut-HF
8	140-9746	1	Battery Subframe ASM
9	144-5559	8	Screw-HHF
10	3230-1	2	Bolt-CARR
11	104-8300	19	Nut-HF, NI
12	140-0777-03	1	Shock Tower ASM
13	126-4687	4	Screw-HHF
14	140-9712-03	1	Canopy Support ASM
15	140-9909	2	Screw-HHF
16	161-2017-03	1	Support-Canopy
17	3234-47	11	Screw-HHF
18	140-0940-03	1	Bracket-Support, Bumper
19	49-2040	4	Screw-HWHTF
20	145-7152-03	1	Gusset-Frame, LH
21	145-7153-03	1	Gusset-Frame, RH
22	144-5580	1	Decal - Vista Li+ Service
24	145-7345	1	Decal-Voltage, High

Front Suspension Assembly

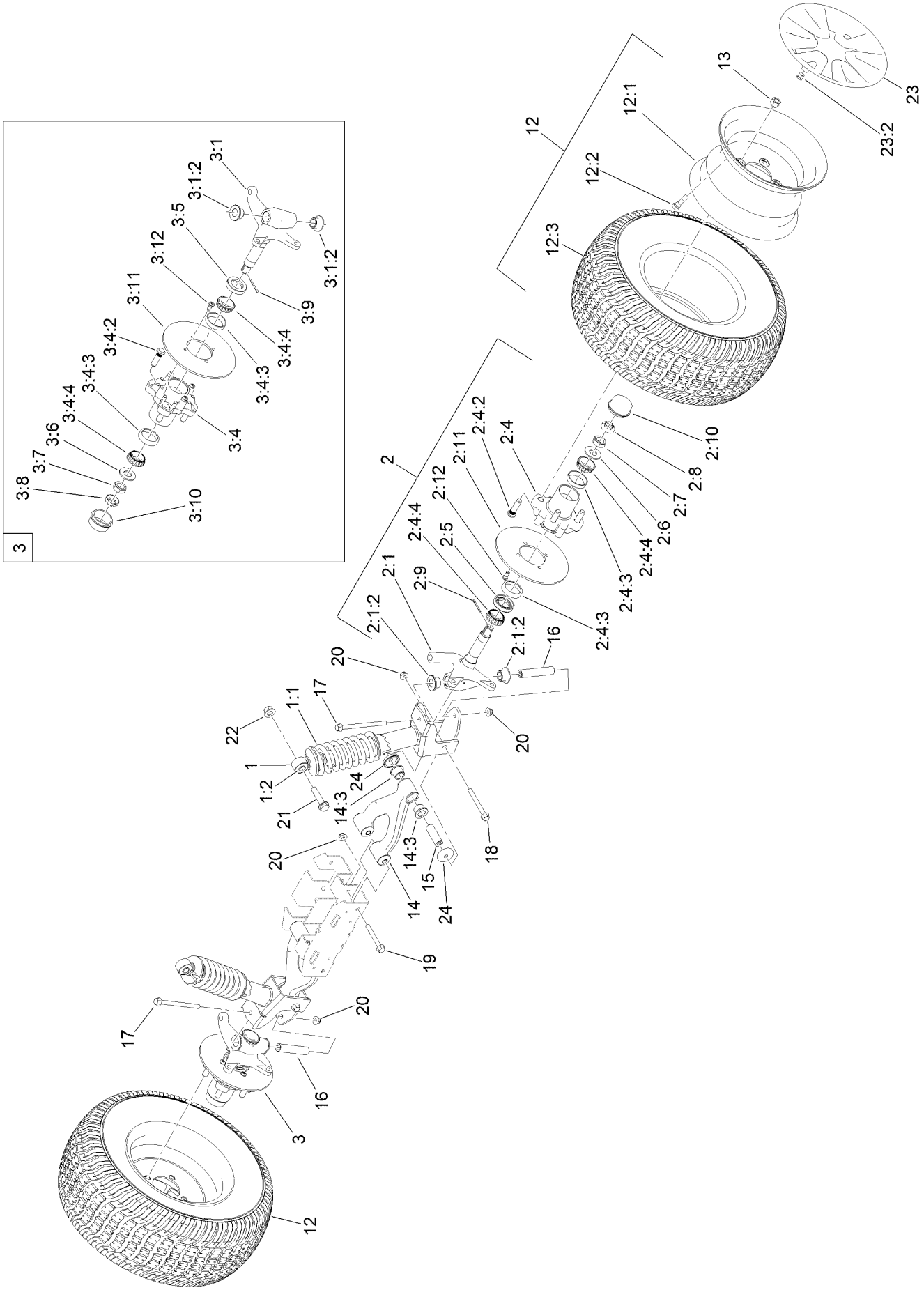

Front Suspension Assembly (continued)

Ref.	Part Number	Qty.	Description
1	145-7338	2	Strut ASM
1:1	145-7158	1	Spring-Coil
1:2	131-8574	1	Isolator-Shock
2		1	LH Spindle ASM ●
2:1	144-5468	1	Spindle ASM LH
2:1:2	140-4615	2	Bushing-Flange
2:4	144-5470	1	Front Hub ASM
2:4:2	10-6830	4	Stud-Type, Drive
2:4:3	254-72	2	Bearing-Cup, Tapered
2:4:4	254-94	2	Bearing-Cone, Tapered
2:5	112-1690	1	Seal-Oil
2:6	93-0309	1	Washer-Tab
2:7	3220-7	1	Nut-Jam
2:8	93-0307	1	Nut-Lock, Retainer
2:9	3272-12	1	Pin-Cotter
2:10	241-119	1	Cap-Dust
2:11	139-4474	1	Rotor-Brake
2:12	121-9671	4	Screw-HSBH,Patch
3		1	RH Spindle ASM ●
3:1	144-5469	1	Spindle ASM RH
3:1:2	140-4615	2	Bushing-Flange
3:4	144-5470	1	Front Hub ASM
3:4:2	10-6830	4	Stud-Type, Drive
3:4:3	254-72	2	Bearing-Cup, Tapered
3:4:4	254-94	2	Bearing-Cone, Tapered
3:5	112-1690	1	Seal-Oil
3:6	93-0309	1	Washer-Tab
3:7	3220-7	1	Nut-Jam
3:8	93-0307	1	Nut-Lock, Retainer
3:9	3272-12	1	Pin-Cotter
3:10	241-119	1	Cap-Dust
3:11	139-4474	1	Rotor-Brake
3:12	121-9671	4	Screw-HSBH,Patch
12	140-9801	2	Tire ASM
12:1	131-8317	1	Wheel
12:2	232-27	1	Stem-Valve
12:3	140-9794	1	Tire
13	139-2564	8	Nut-Lug
14	161-1819	2	Control Arm ASM
14:3	147-3983	2	Bushing-Flange
15	144-5634	2	Sleeve-Outer
16	131-8582	2	Sleeve-Kingpin
17	139-3350	2	Screw-HF
18	139-3370	2	Screw-HF
19	140-9853	4	Screw-HF
20	139-3380	8	Nut-HF
21	3234-46	2	Screw-HHF
22	99-5107	2	Nut-HF Nylock
23	140-0933	2	Wheel Cover ASM
23:2	140-0932	3	Clip-Cover, Wheel
24	140-9793	4	Pin Seal

● Not serviced separately

Steering Assembly

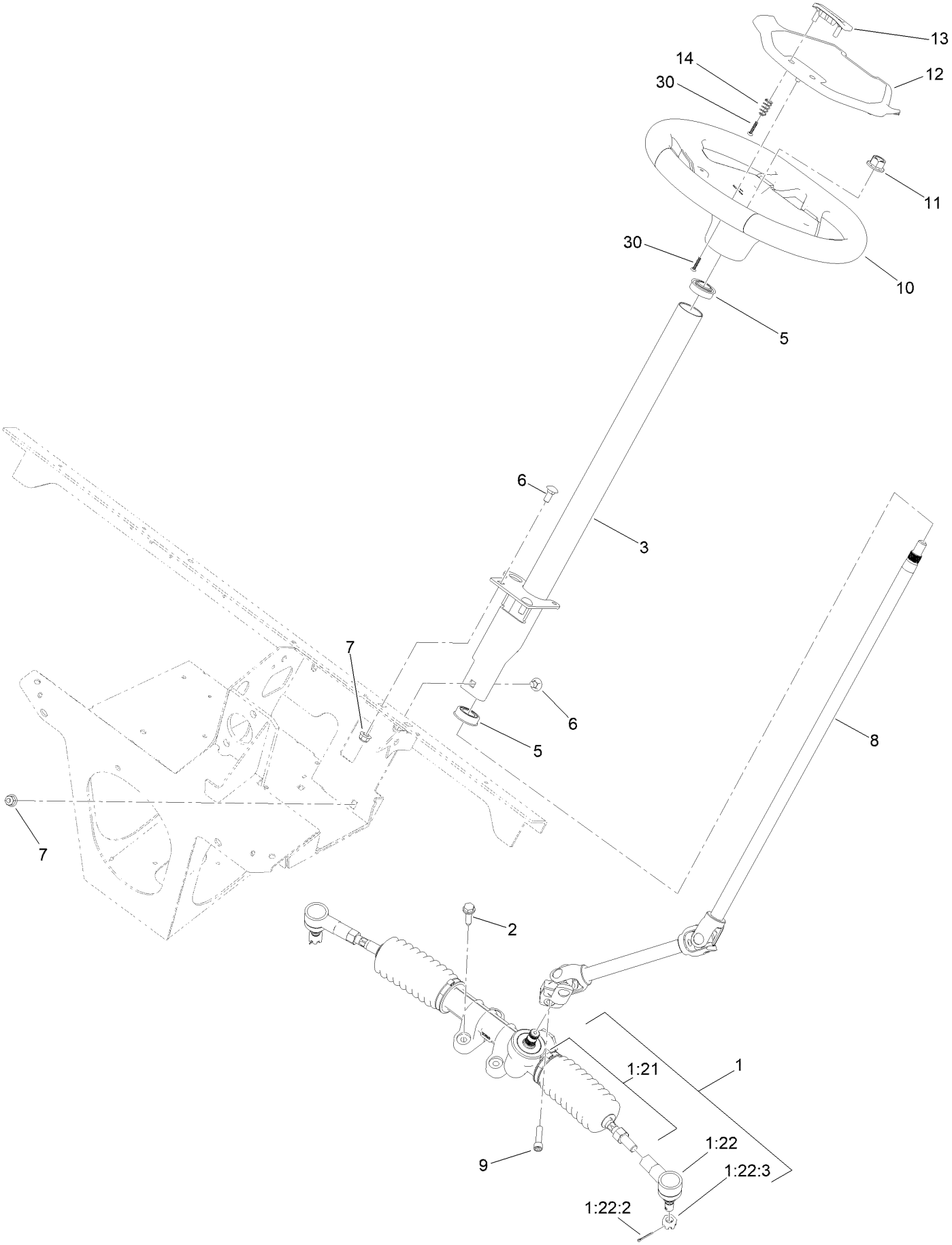

Steering Assembly (continued)

Ref.	Part Number	Qty.	Description
1	140-9830	1	Steering Rack ASM
1:21	140-9829	1	Kit-Tie Rod ASM
1:22	140-4592	1	Kit-Rod End ASM
1:22:2	3272-42	1	Pin-Cotter
1:22:3	140-2493	1	Nut-Hex, Slotted
2	32144-49	4	Screw-HWHTF
3	140-9705	1	Steering Column ASM
5	112-3262	2	Bearing
6	3230-1	3	Bolt-CARR
7	104-8300	3	Nut-HF, NI
8	140-9704	1	Shaft-Steering
9	145-7145	1	Screw-HSH,Lock
10	144-5570	1	Steering Wheel ASM
11	99-5107	1	Nut-HF Nylock
12	144-5567	1	Cover-Wheel, Steering
13	144-5566	1	Clip-Wheel, Steering
14	144-5537	2	Spring-Compression
30	94-4496	5	Screw-PPH

Rear Suspension Assembly

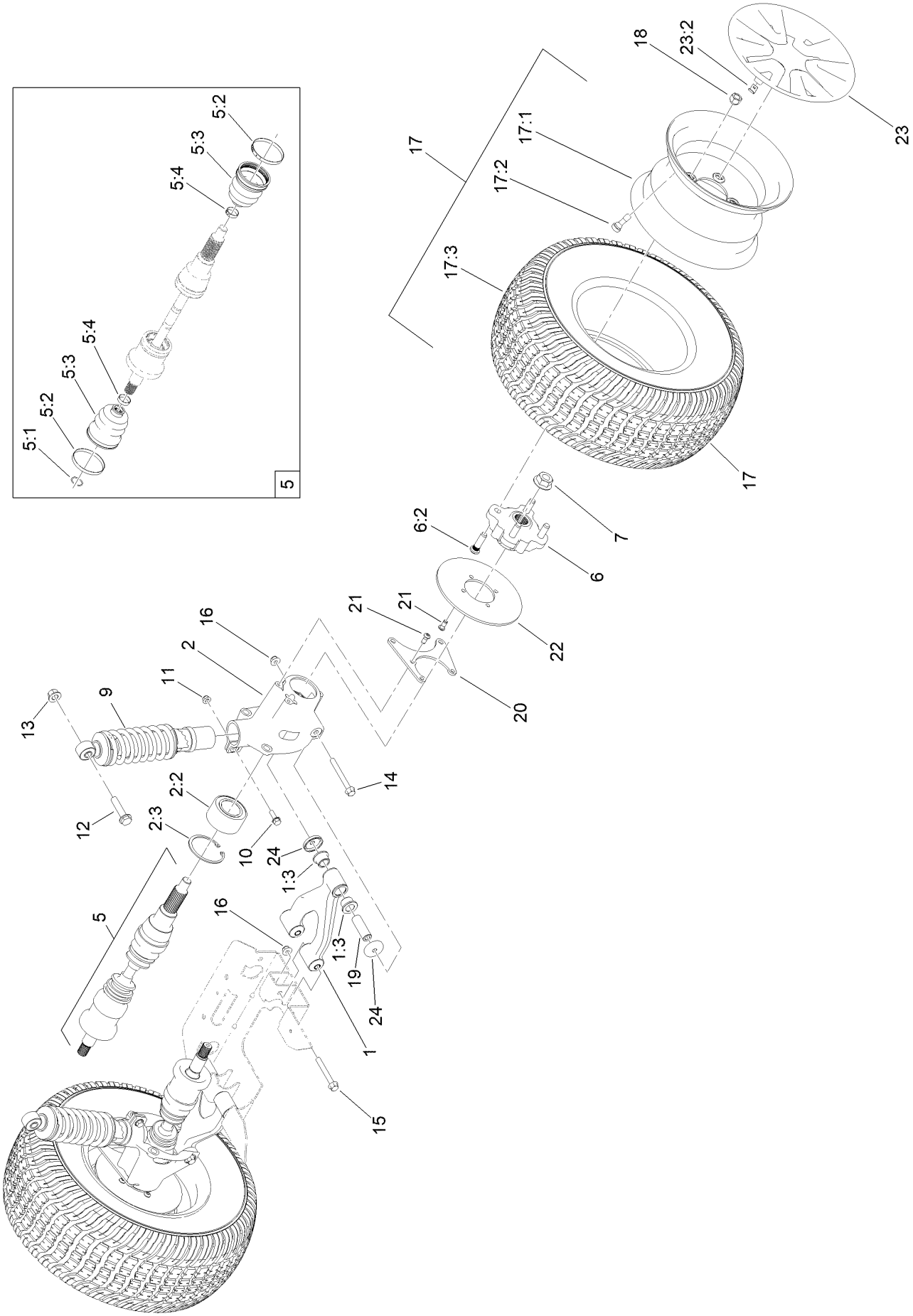

Rear Suspension Assembly (continued)

Ref.	Part Number	Qty.	Description
1	161-1819	2	Control Arm ASM
1:3	147-3983	2	Bushing-Flange
2	144-5555	2	Rear Upright ASM
2:2	133-7272	1	Bearing-Ball
2:3	144-2207	1	Ring-Retaining
5	145-7062	2	Cv Axle
5:1	145-7195	1	Circlip
5:2	145-7196	2	Clamp
5:3	145-7197	2	Boot-Cv
5:4	145-7198	2	Clamp-Cv
6	145-7151	2	Rear Hub ASM
6:2	10-6830	4	Stud-Type, Drive
7	32128-53	2	Nut-HF
9	139-4291	2	Shock ASM
10	3234-29	2	Screw-HHF
11	104-8300	2	Nut-HF, NI
12	3234-46	2	Screw-HHF
13	99-5107	2	Nut-HF Nylock
14	139-3370	2	Screw-HF
15	140-9853	4	Screw-HF
16	139-3380	6	Nut-HF
17	140-9801	2	Tire ASM
17:1	131-8317	1	Wheel
17:2	232-27	1	Stem-Valve
17:3	140-9794	1	Tire
18	139-2564	8	Nut-Lug
19	144-5634	2	Sleeve-Outer
20	140-9749	2	Plate-Caliper
21	121-9671	14	Screw-HSBH,Patch
22	139-4474	2	Rotor-Brake
23	140-0933	2	Wheel Cover ASM
23:2	140-0932	3	Clip-Cover, Wheel
24	140-9793	4	Pin Seal

Brake and Throttle Pedal Assembly

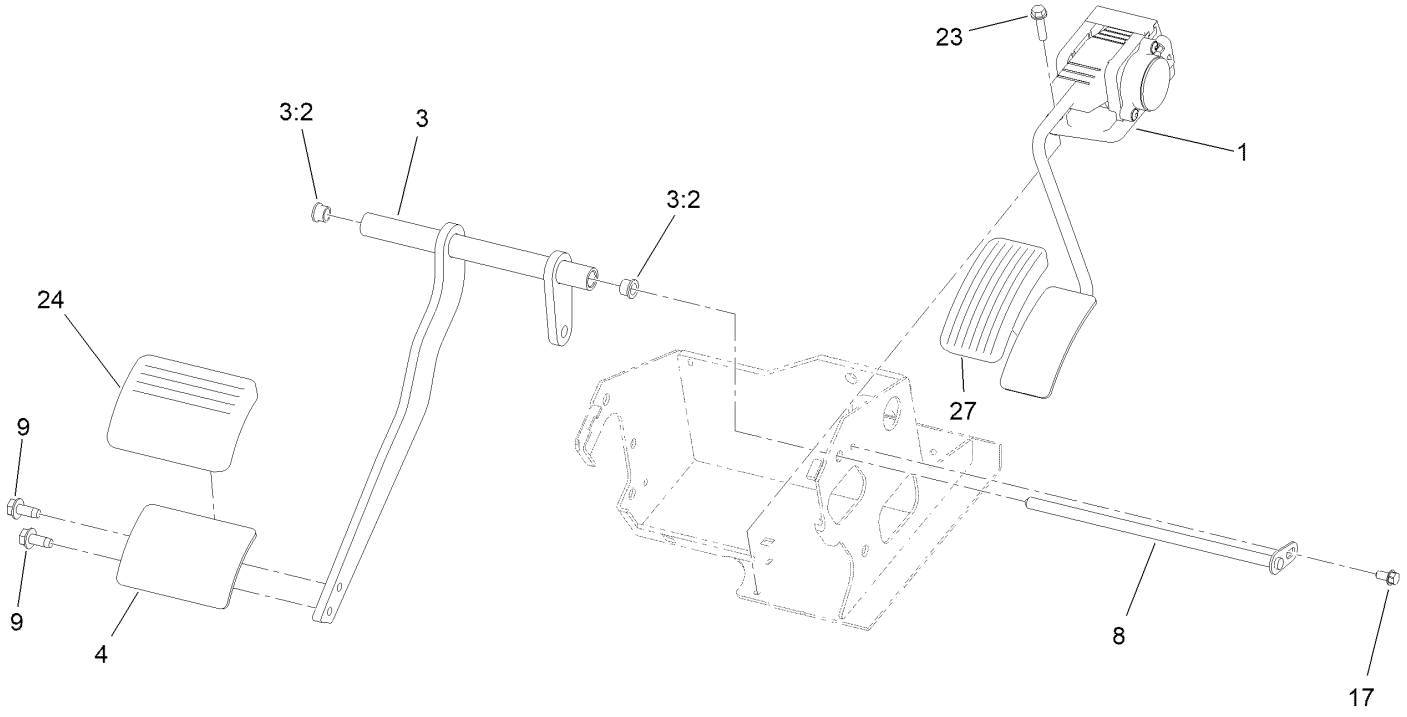

Brake and Throttle Pedal Assembly (continued)

Ref.	Part Number	Qty.	Description
1	140-9859	1	Throttle-Electronic
3	145-7162	1	Brake Pedal ASM
3:2	256-116	2	Bushing-Flange
4	161-5256	1	Brake Pedal Pad ASM [black]
8	140-0772	1	Flag Pin ASM
9	32144-70	2	Screw-HWHTF
17	32144-4	1	Screw-HWH
23	32144-86	3	Screw-HWHTF
24	161-5253	1	Footpad-Pedal
27	140-4572	1	Pedal Pad-Throttle

Front and Rear Brake Assembly

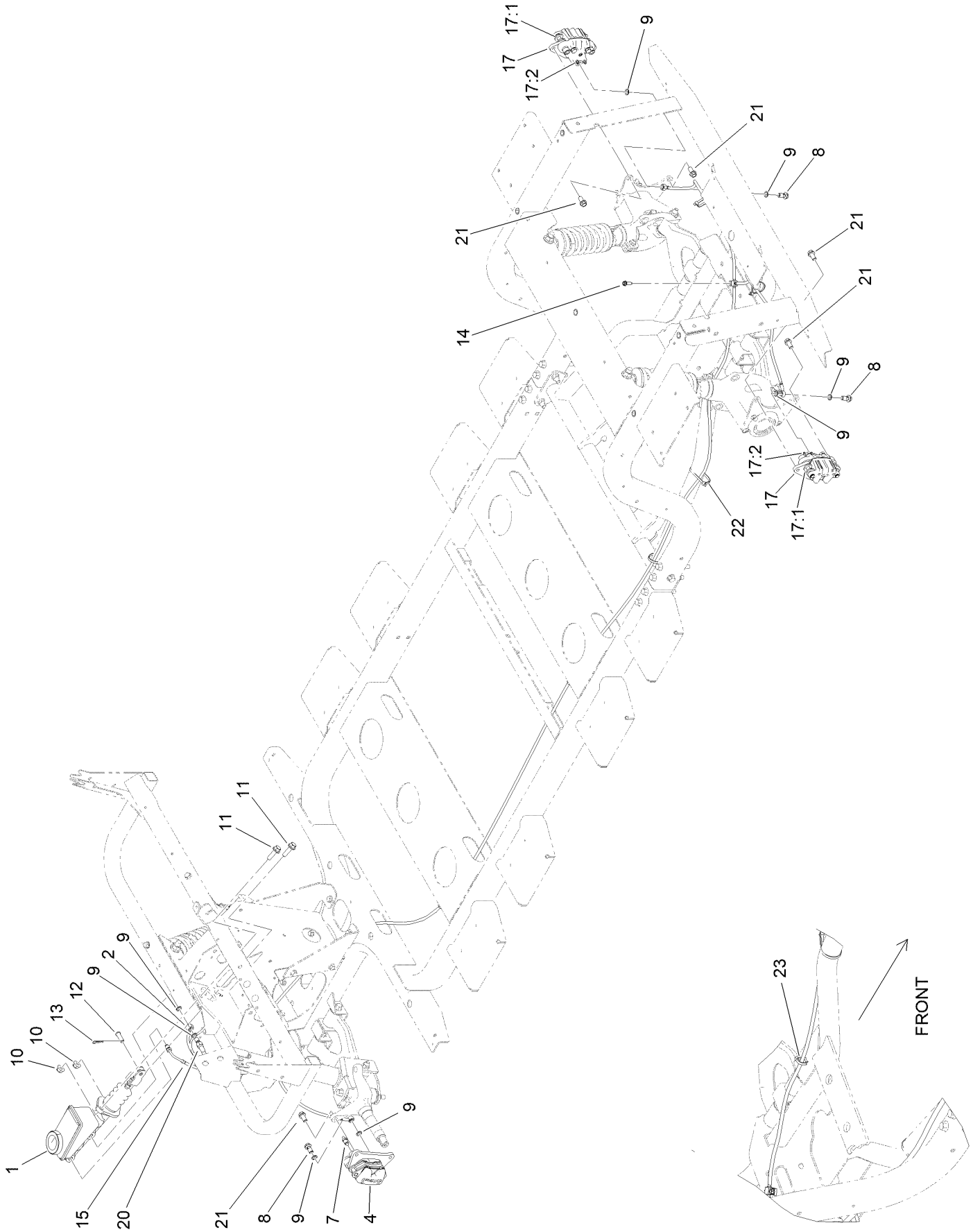

Front and Rear Brake Assembly (continued)

Ref.	Part Number	Qty.	Description
1	104-6782	1	Master Cylinder ASM
2	140-9993	1	Brake Line ASM
4	161-1890	2	Brake Caliper ASM
7	119-9509	2	Screw-Bleed
8	120-4875	4	Bolt-Flange, Banjo
9	115-2341	10	Washer-Banjo
10	104-8301	2	Nut-HF, NI
11	119-4061	2	Screw-HHF
12	283-2	1	Pin-Clevis
13	1-806003	1	Pin-Cotter
14	49-2040	2	Screw-HWHTF

Ref.	Part Number	Qty.	Description
15	140-9997	1	Brake Line ASM
17	145-7159	2	Brake Caliper ASM
17:1	140-2595	1	Brake Pad Service Kit (Rear, Qty 4)
17:2	145-7149	1	Fitting-Bleed Screw
17:3	136-6328	2	Spring-Rattle, Anti ●
20	144-2227	1	Switch-Brake, Pressure
21	144-5550	8	Screw-Spl
22	3290-378	8	Tie-Cable
23	32180-030	1	Clip-Tie

● Not illustrated

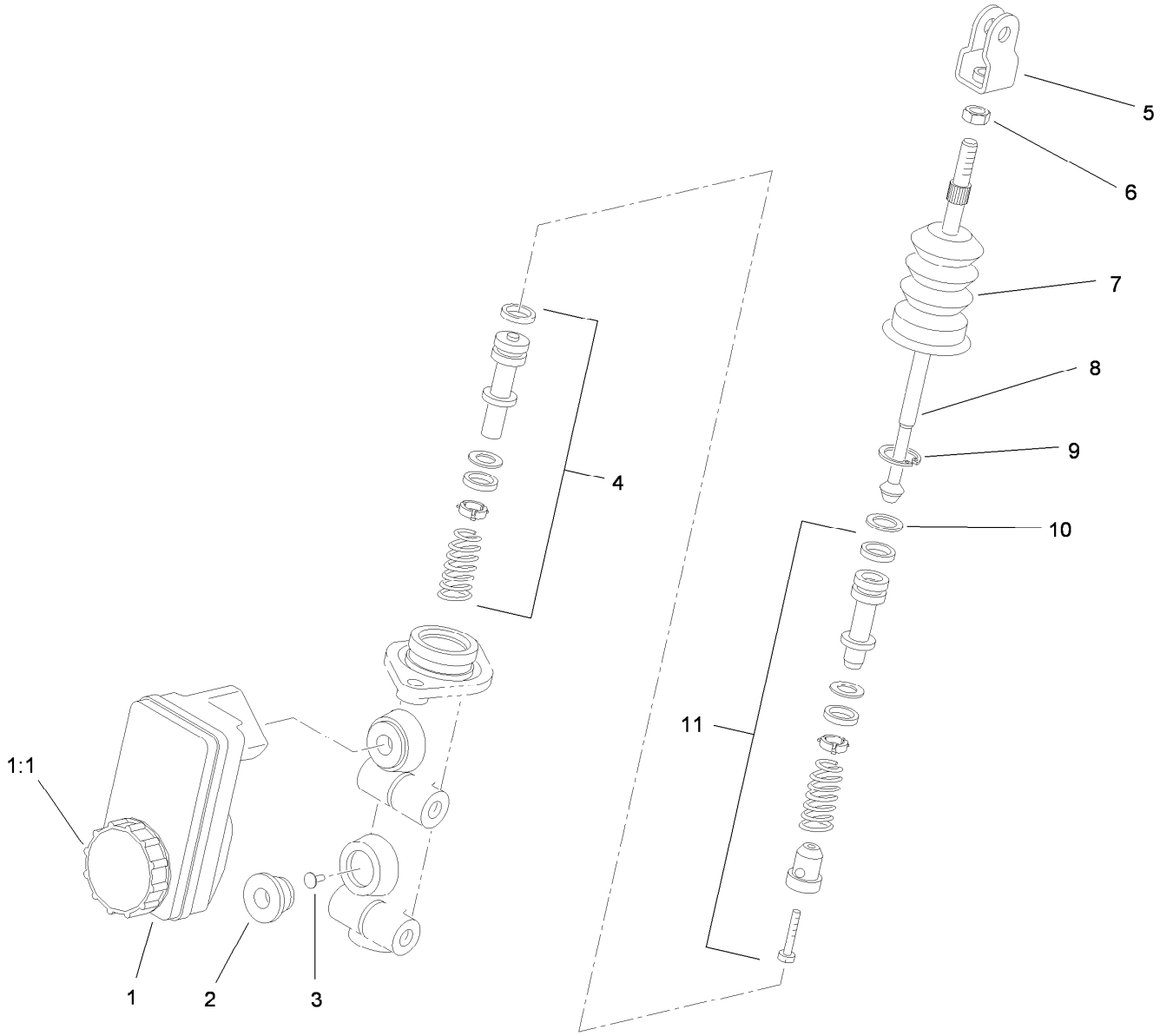

Master Cylinder Assembly No. 104-6782

Ref.	*Part Number*	*Qty.*	*Description*
1	104-6845	1	Reservoir ASM
1:1	92-4112	1	Cap ASM
2	93-8971	2	Seal-Port, Flange
3	92-4103	1	Pin-Stop
4	92-4102	1	Secondary Piston ASM
5	92-4110	1	Clevis
6	21-0360	1	Nut-Hex
7	94-5209	1	Cover-Dust
8	94-5210	1	Rod-Push
9	92-4109	1	Ring-Snap
10	92-4108	1	Retainer-Washer
11	92-4101	1	Primary Piston ASM

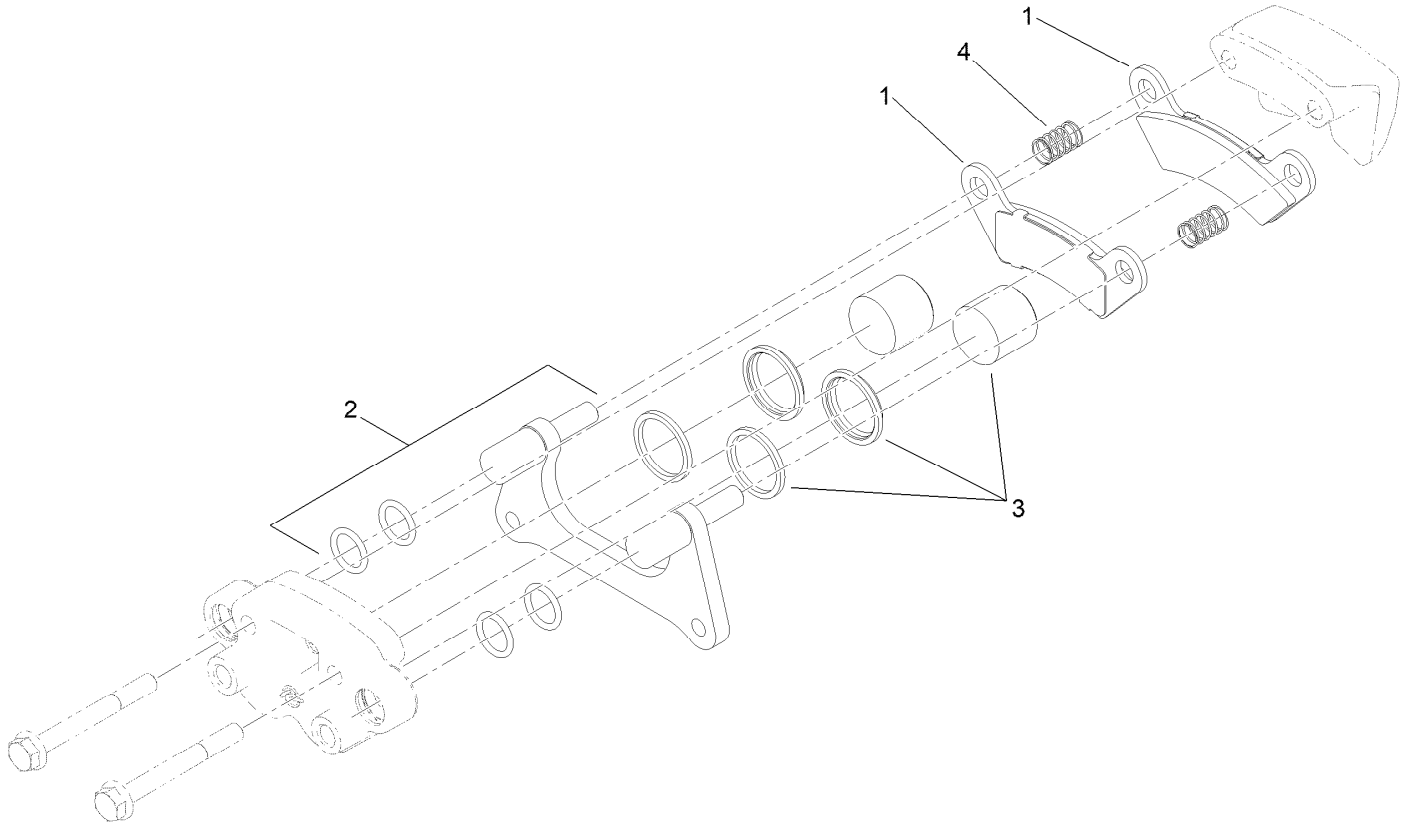

Brake Caliper Assembly No. 161-1890

Ref.	*Part Number*	*Qty.*	*Description*
1	140-2580	1	Brake Pad Service Kit (Front, Qty 4)
2	119-9511	1	Bracket Kit
3	133-0614	1	Piston Kit
4	161-1889	2	Spring-Compression, Service

Hood, Front Fenders and Dash Assembly

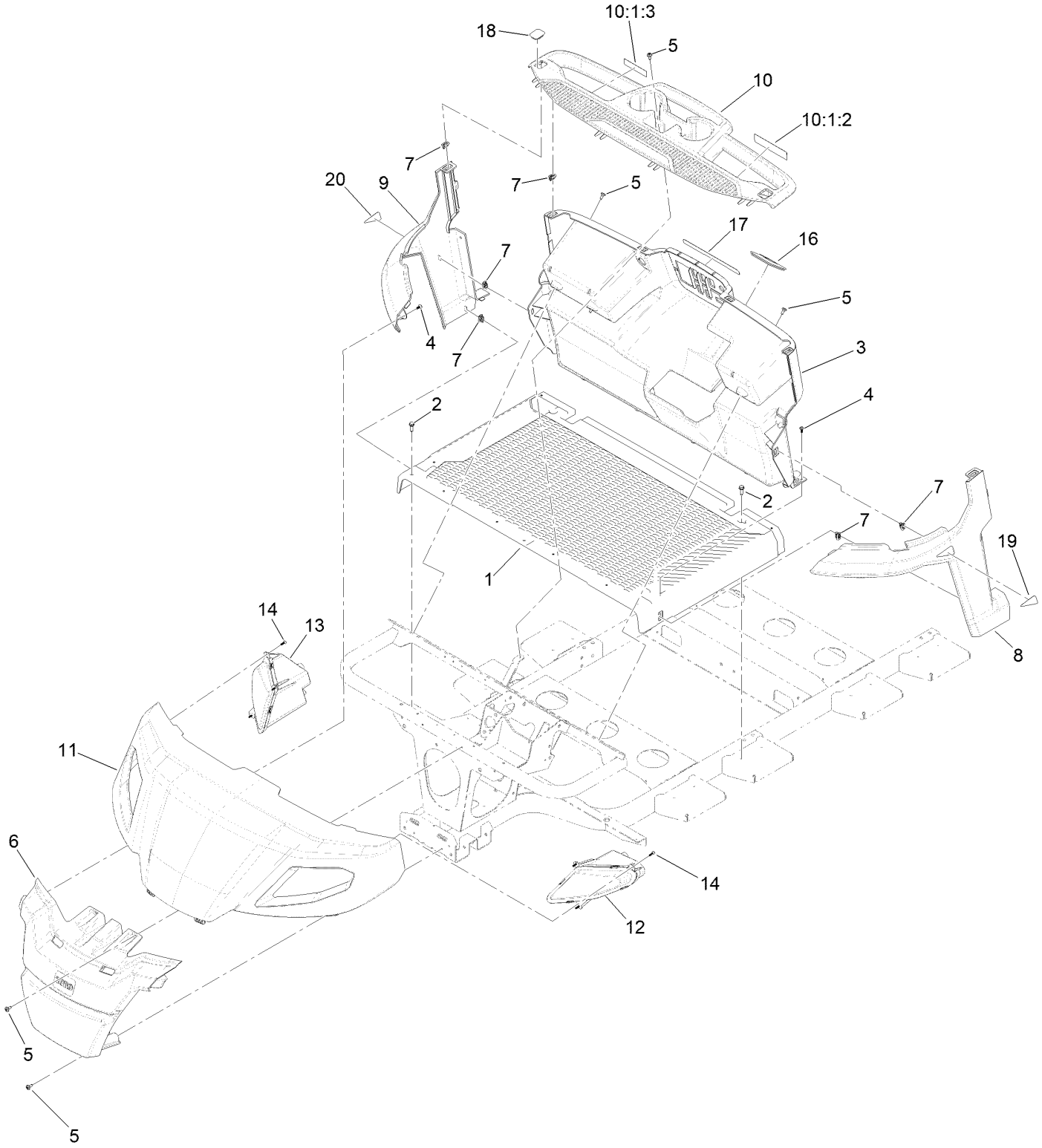

Hood, Front Fenders and Dash Assembly (continued)

Ref.	Part Number	Qty.	Description
1	140-0850SP	1	Floor-Front
2	701243	5	Screw-Thd Roll, HWH
3	140-9901SP	1	Dash
4	138-5775	10	Screw-Delta Point
5	120-7950	8	Screw-Torx
6	140-0845SP	1	Bumper-Front
7	140-9908	10	Clip-Trim
8	140-0842SP	1	Fender-Front, LH
9	140-0843SP	1	Fender-Front, RH
10	145-7051SP	1	Dash-Top 6/8P
10:1:2	144-5571	1	Decal-Vista Safety, Driver
10:1:3	140-0920	1	Decal-Vista Safety, Passenger

Ref.	Part Number	Qty.	Description
11	145-7200SP	1	Hood-Vista, Beige
12	140-0890	1	Headlight-LH
13	140-0891	1	Headlight-RH
14	140-9930	6	Screw-Bhf, Plastic
16	144-5505	1	Grommet-Column, Steering
17	144-5573	1	Decal-Control Panel, Electric
18	145-7122	2	Cap-Plug, Dash
19	140-0941	1	Decal-Reflector, Front, LH
20	140-0942	1	Decal-Reflector, Front, RH

Main Seat and Rear Fenders Assembly

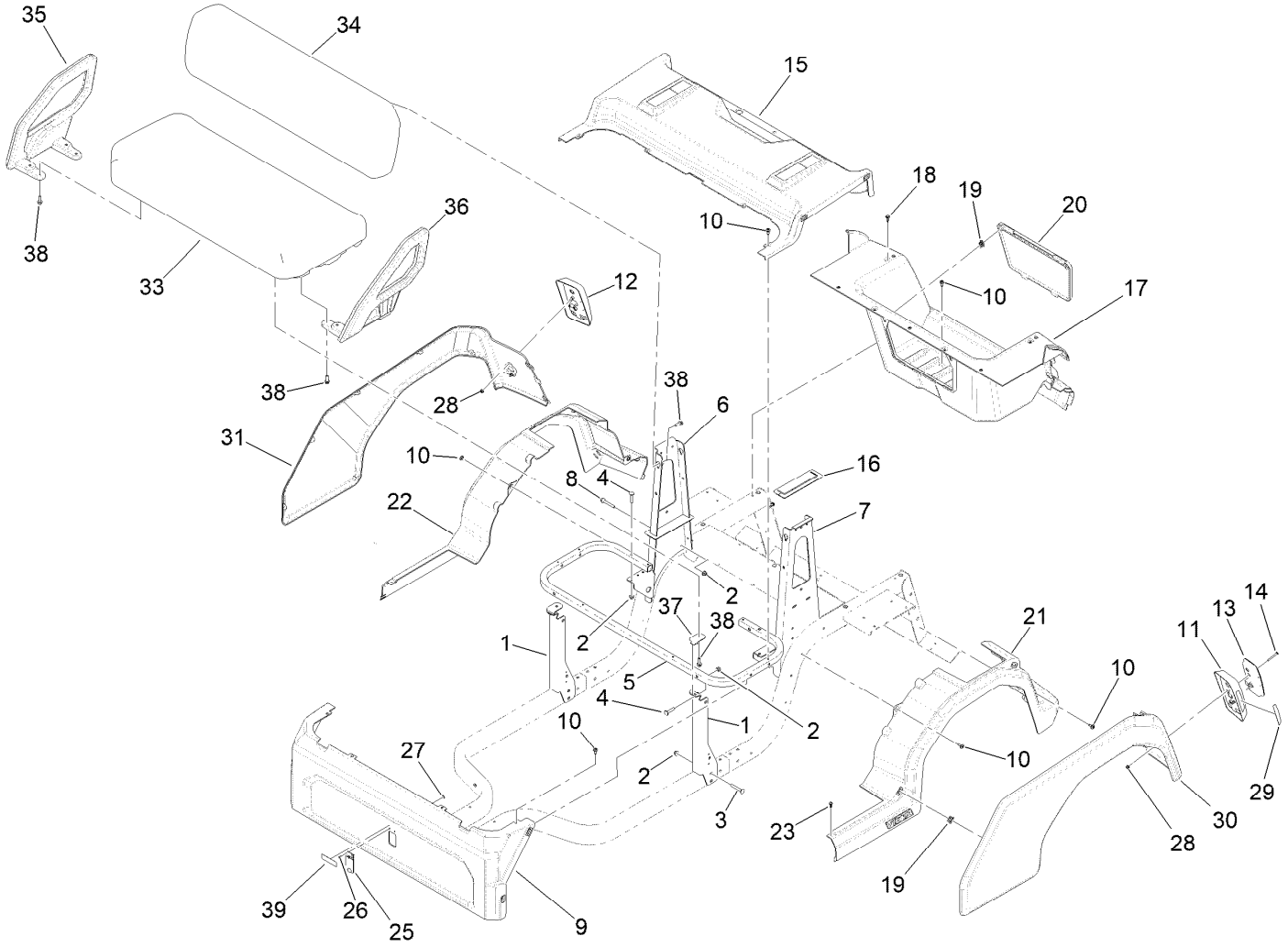

Main Seat and Rear Fenders Assembly (continued)

Ref.	Part Number	Qty.	Description
1	140-0800-03	2	Bracket-Support, Seat Frame
2	104-8300	12	Nut-HF, NI
3	3230-7	4	Bolt-CARR
4	3230-4	4	Screw-CARR
5	140-9788-03	1	Tube-Frame, Seat Bottom
6	144-5623-03	1	Bracket-Back, RH
7	144-5622-03	1	Bracket-Back, LH
8	139-4479	4	Screw-HHF
9	147-3889SP	1	Panel-Base, Seat
10	120-7950	14	Screw-Torx
11	140-9910	1	Housing-Tail Light, LH
12	140-9911	1	Housing-Tail Light, RH
13	139-2071	2	Light-Rear Tail/Stop/Turn
14	3250-48	4	Screw-PPH
15	140-0846SP	1	Cover-Rear
16	140-9904	2	Grommet-Bracket, Seat
17	140-0851SP	1	Tub-Rear
18	125-9622	8	Rivet-Blind
19	140-9908	14	Clip-Trim
20	140-0866	1	Door-Access, Rear
21	140-0847SP	1	Fender-Rear, LH
22	140-0848SP	1	Fender-Rear, RH
23	138-5775	2	Screw-Delta Point
25	144-6628	1	Plate-Cover, Spring
26	3290-271	2	Rivet-Pop
27	3269-10	2	Washer-Back
28	138-0719	4	Nut-HF
29	140-0943	2	Decal-Reflector, Rear
30	145-7210SP	1	Panel-Rear, LH Beige
31	145-7220SP	1	Panel-Rear, RH Beige
33	140-9941SP	1	Seat Bottom ASM-Beige
34	140-9943SP	1	Seat Backrest ASM-Beige
35	140-0804SP	1	Restraint-Hip, RH
36	140-0802SP	1	Restraint-Hip, LH
37	140-0812	2	Bracket-Hinge, Seat
38	115-5142	14	Screw-HHF, Patch
39	140-4590	1	Decal-Charger Input Lithium

Passenger Seat Assembly

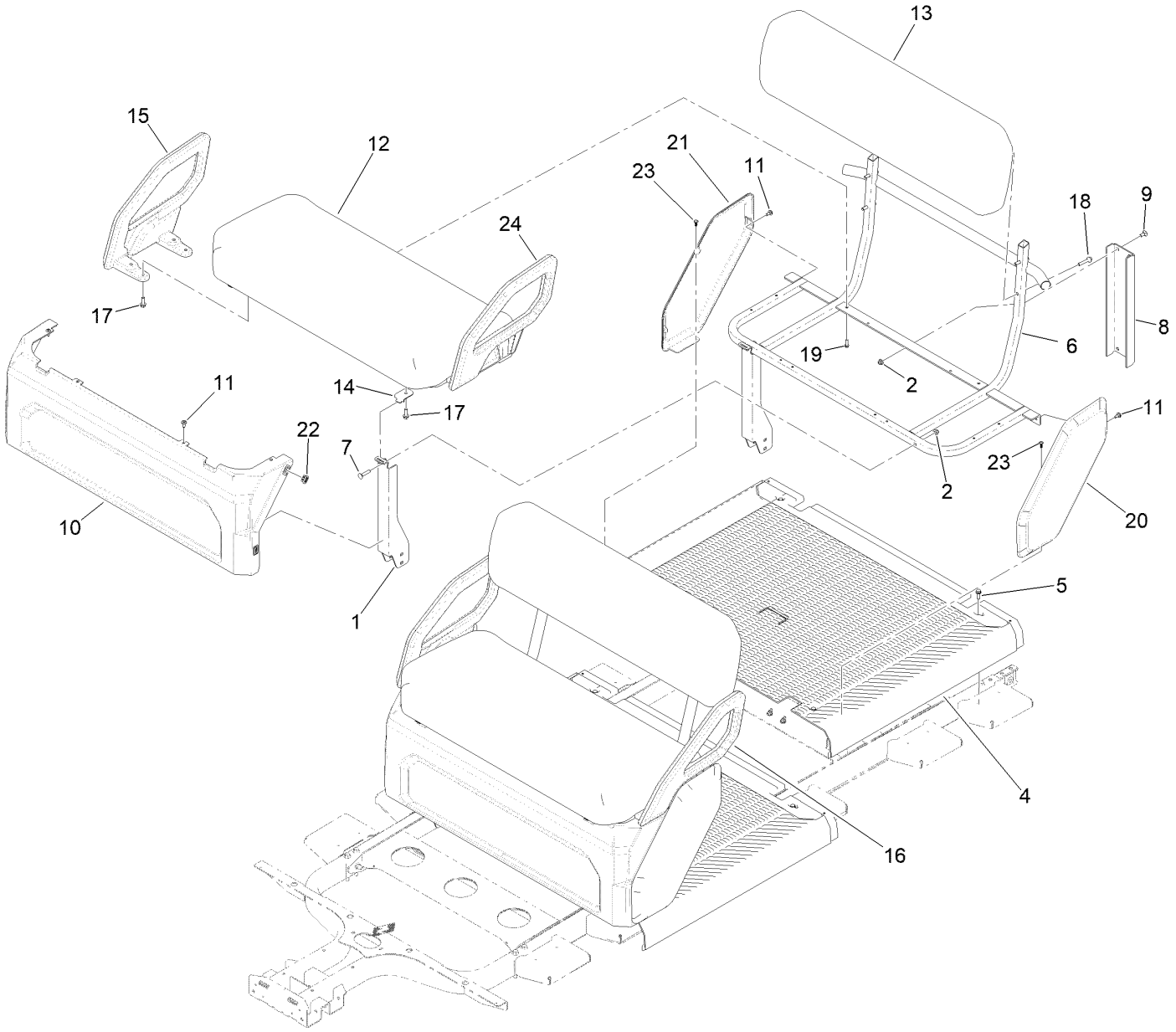

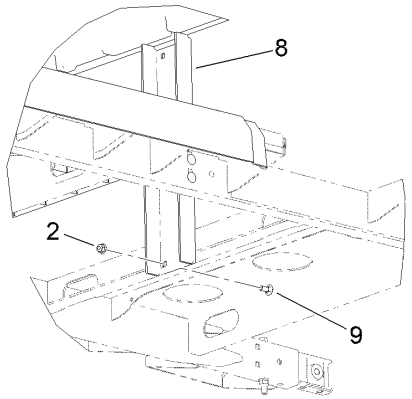

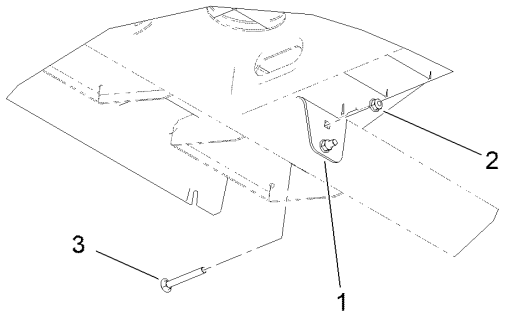

Passenger Seat Assembly (continued)

Ref.	Part Number	Qty.	Description
1	144-5556-03	4	Bracket-Support, Seat [bla
2	104-8300	20	Nut-HF, NI
3	3230-9	8	Screw-CARR
4	140-0870SP	2	Floor-Middle
5	701243	8	Screw-Thd Roll, HWH
6	140-9785SP	2	Seat Support ASM
7	3230-4	4	Screw-CARR
8	140-9753-05	2	Post-Center
9	3230-1	8	Bolt-CARR
10	140-0849SP	2	Panel-Base, Seat
11	120-7950	12	Screw-Torx
12	140-9941SP	2	Seat Bottom ASM-Beige
13	140-9943SP	2	Seat Backrest ASM-Beige
14	140-0812	4	Bracket-Hinge, Seat
15	140-0804SP	2	Restraint-Hip, RH
16	140-0803SP	1	Restraint-Hip, Driver
17	115-5142	20	Screw-HHF, Patch
18	145-7105	8	Screw-HHF
19	46-8091	4	Screw-HWH
20	145-7230	2	Panel-Seat, LH
21	145-7240	2	Panel-Seat, RH
22	140-9908	8	Clip-Trim
23	138-5775	4	Screw-Delta Point
24	140-0802SP	1	Restraint-Hip, LH

Rear Facing Seat Assembly

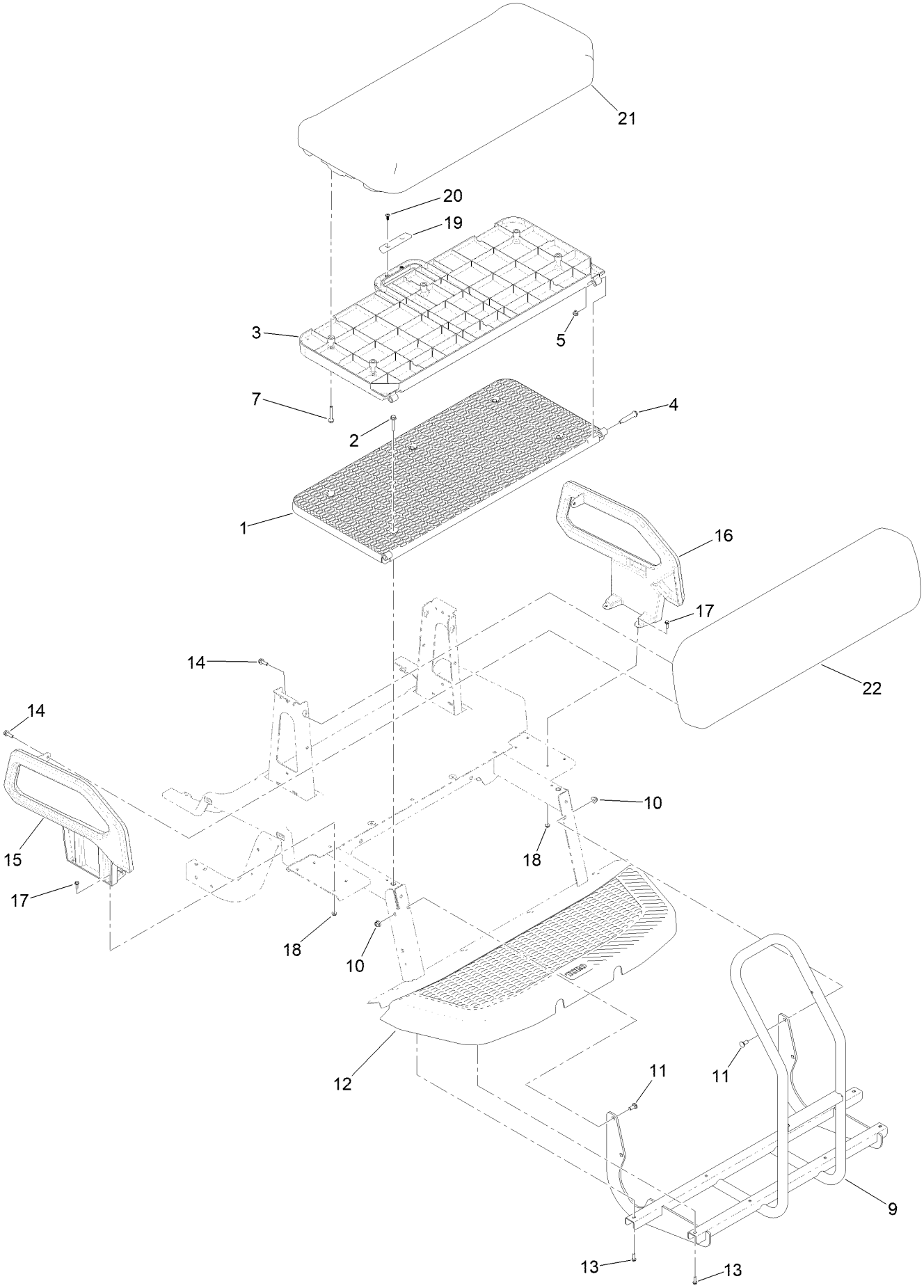

Rear Facing Seat Assembly (continued)

Ref.	Part Number	Qty.	Description
1	140-0821SP	1	Floor-Box, Cargo
2	145-7105	5	Screw-HHF
3	140-0820SP	1	Floor-Flip Seat
4	136-7199	2	Bolt-Shoulder
5	104-8300	2	Nut-HF, NI
7	140-9909	5	Screw-HHF
9	140-0875SP	1	Rear Floor Frame ASM
10	104-8301	4	Nut-HF, NI
11	3231-12	4	Bolt-CARR
12	140-0872SP	1	Floor-Rear
13	46-8091	8	Screw-HWH
14	115-5142	6	Screw-HHF, Patch
15	140-0833SP	1	Restraint-Hip, LH Rear
16	140-0834SP	1	Restraint-Hip, RH Rear
17	32105-15	8	Screw-HWH
18	104-7201	8	Nut-HF, NI
19	145-7100	1	Bumper-Rubber, Flip Seat
20	138-5775	2	Screw-Delta Point
21	140-9941SP	1	Seat Bottom ASM-Beige
22	140-9943SP	1	Seat Backrest ASM-Beige

Batteries, Motor and Transaxle Assembly

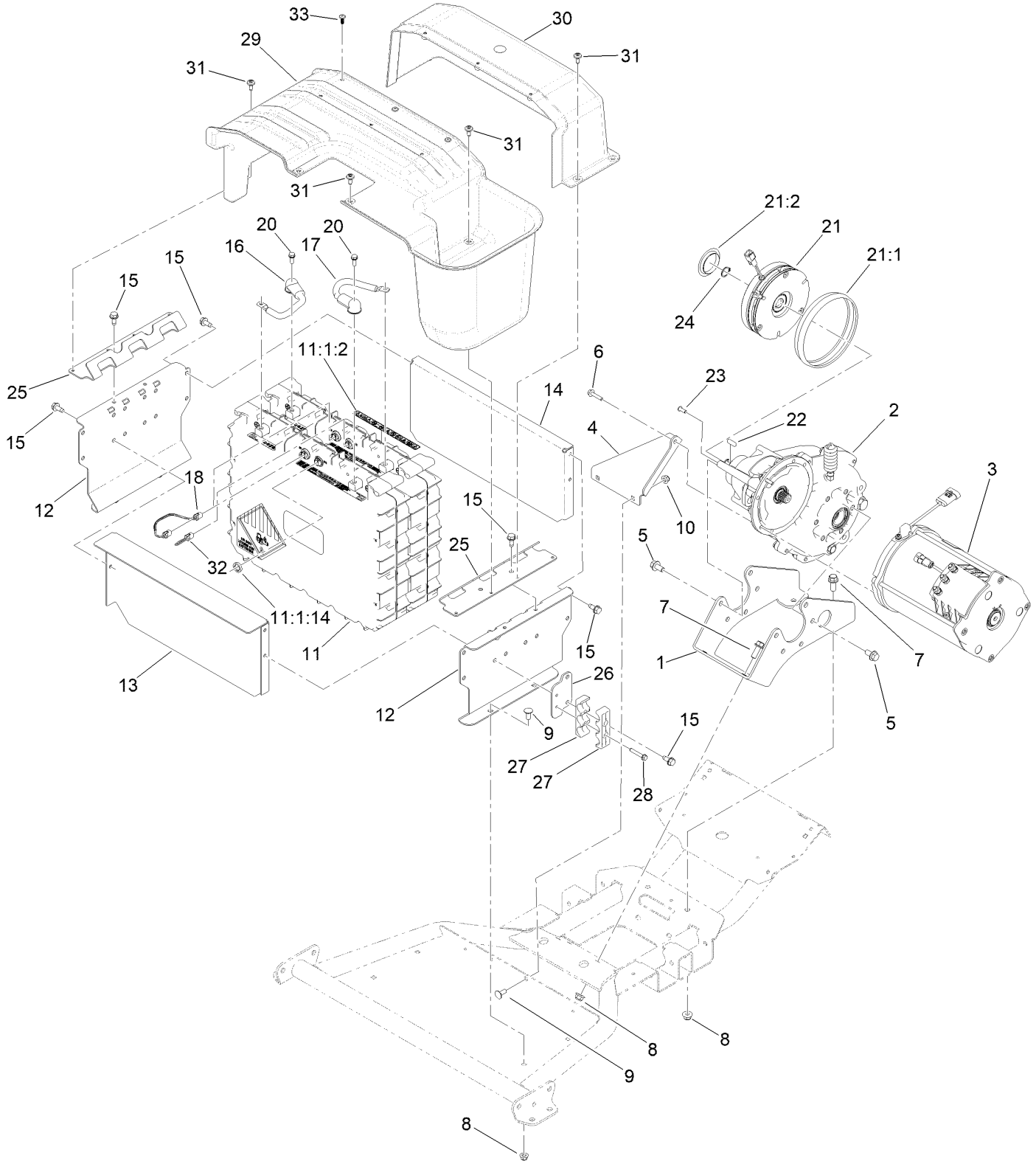

Batteries, Motor and Transaxle Assembly (continued)

Ref.	Part Number	Qty.	Description
1	140-9822-03	1	Bracket-Mount, Trans
2	145-7060	1	Transaxle-Electric
3	137-6936	1	Motor-AC
4	140-9797-03	1	Brace-Motor
5	139-6300	10	Screw-HHF,Patch
6	33103-030	6	Screw-HHF
7	3234-42	4	Screw-HHF
8	104-8301	4	Nut-HF, NI
9	3230-1	6	Bolt-CARR
10	104-8300	6	Nut-HF, NI
11	145-5385	2	Battery ASM
11:1:2	145-5338	1	Decal-Warning, Battery
11:1:14	32180-466	2	Nut-Mounting, Jwpf Panel Lock
12	144-5440-03	2	Bracket-Battery, Side
13	145-7170-03	1	Panel-Battery, Front
14	145-7169-03	1	Panel-Battery, Rear
15	32144-70	12	Screw-HWHTF
16	145-7275	1	Cable-Battery, Rd ASM
17	145-7276	1	Cable-Battery, Bk ASM
18	140-9565	1	Harness-Wire, Data Interface
20	145-5783	2	Screw-Sems
21	145-7061	1	Brake-Electric
21:1	145-7184	1	Dust Cover
21:2	145-7186	1	End Cap
22	145-7163	1	Key-Square
23	145-7164	3	Screw-HSBH
24	32120-15	1	Ring-Snap, EXT
25	145-7171-03	2	Bracket-Battery, Hold
26	145-7175	1	Bracket-Clamp, Cable
27	145-7166	2	Clamp-Cable
28	94-2691	2	Screw-HWH Taptite
29	145-7178	1	Cover-Front, Battery
30	145-7177	1	Cover-Rear, Battery
31	120-7950	11	Screw-Torx
32	122-2323	1	Harness-Wire, Can Terminator
33	138-5775	3	Screw-Delta Point

Transaxle Assembly No. 145-7060

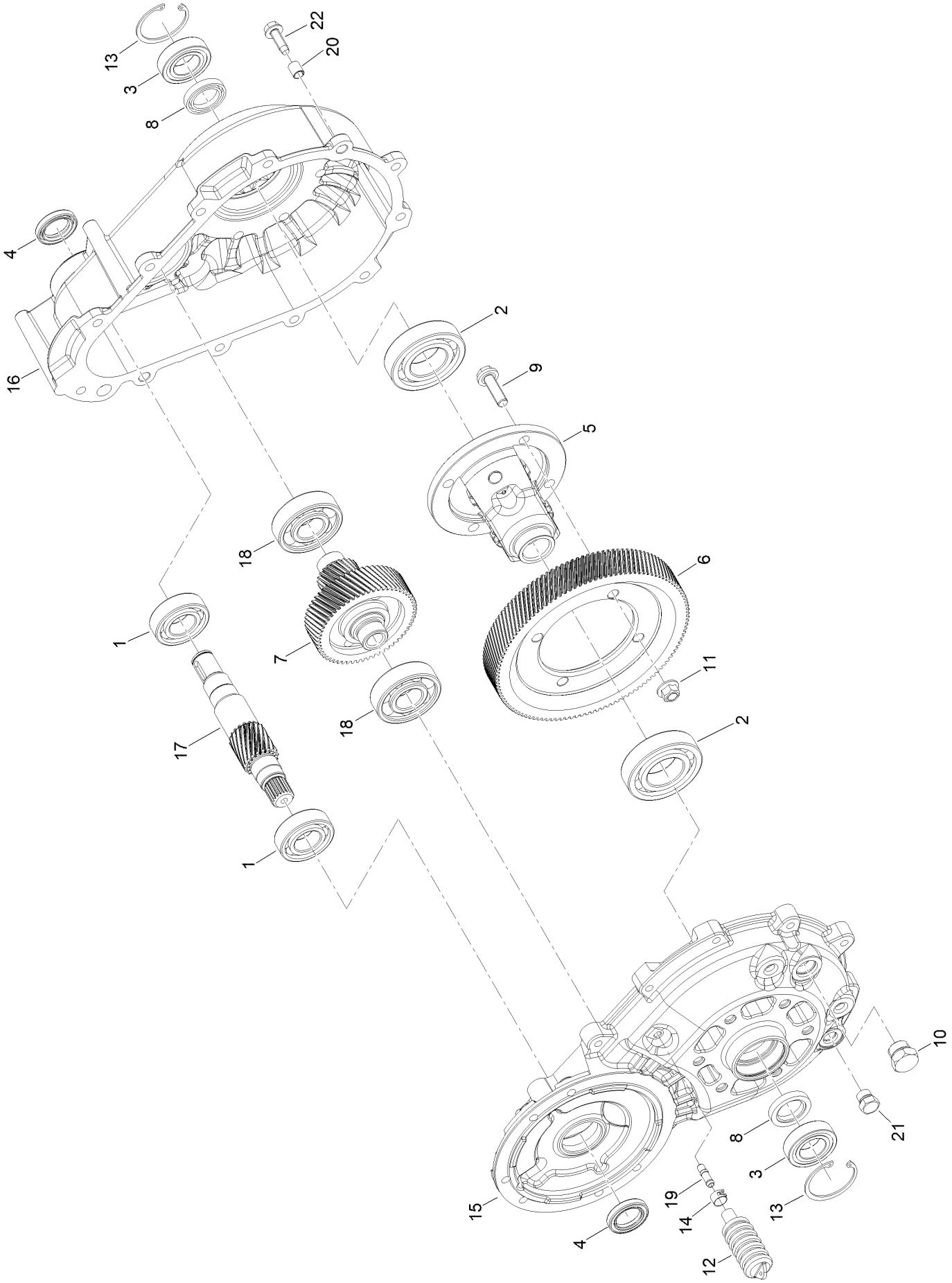

Transaxle Assembly No. 145-7060 (continued)

Ref.	Part Number	Qty.	Description
1	145-7286	2	Bearing, Ball, Single Row, 6205
2	145-7287	2	Bearing, Ball, Single Row, 6207
3	145-7288	2	Bearing, Ball, Single Row, 6005-2Rs
4	145-7289	2	Seal, Oil, .945 Shaft, 1.499 Bore
5	145-7290	1	Assembly, Differential Case, Standard
6	145-7291	1	Gear, Helical, Output, Finish, 116T
7	145-7292	1	Assembly, Shaft And Gear, Intermediate
8	145-7293	2	Seal, Oil, 25 MM Shaft, 1.499 Bore
9	133-2462	4	Bolt-HHF
10	133-2466	1	Plug-HH
11	133-2463	4	Nut-Lock
12	145-7294	1	Vent, Bellows
13	133-2450	2	Ring-Retaining
14	145-7295	1	Clamp, Hose
15	145-7296	1	Housing, Machined, Left
16	145-7297	1	Housing, Machined, Right
17	145-7298	1	Shaft, Input, 18T
18	145-7299	2	Bearing, Ball, Single Row, 6305
19	147-4096	1	Tube, Vent
20	145-7301	2	Bushing, Dowel, .313 X .500
21	145-7302	1	Drain Plug, Magnetic, O-Ring, 1/2-20
22	147-4095	12	Screw, Hex Head, 5/16-18, Thread Forming

Electric Motor Assembly No. 137-6936

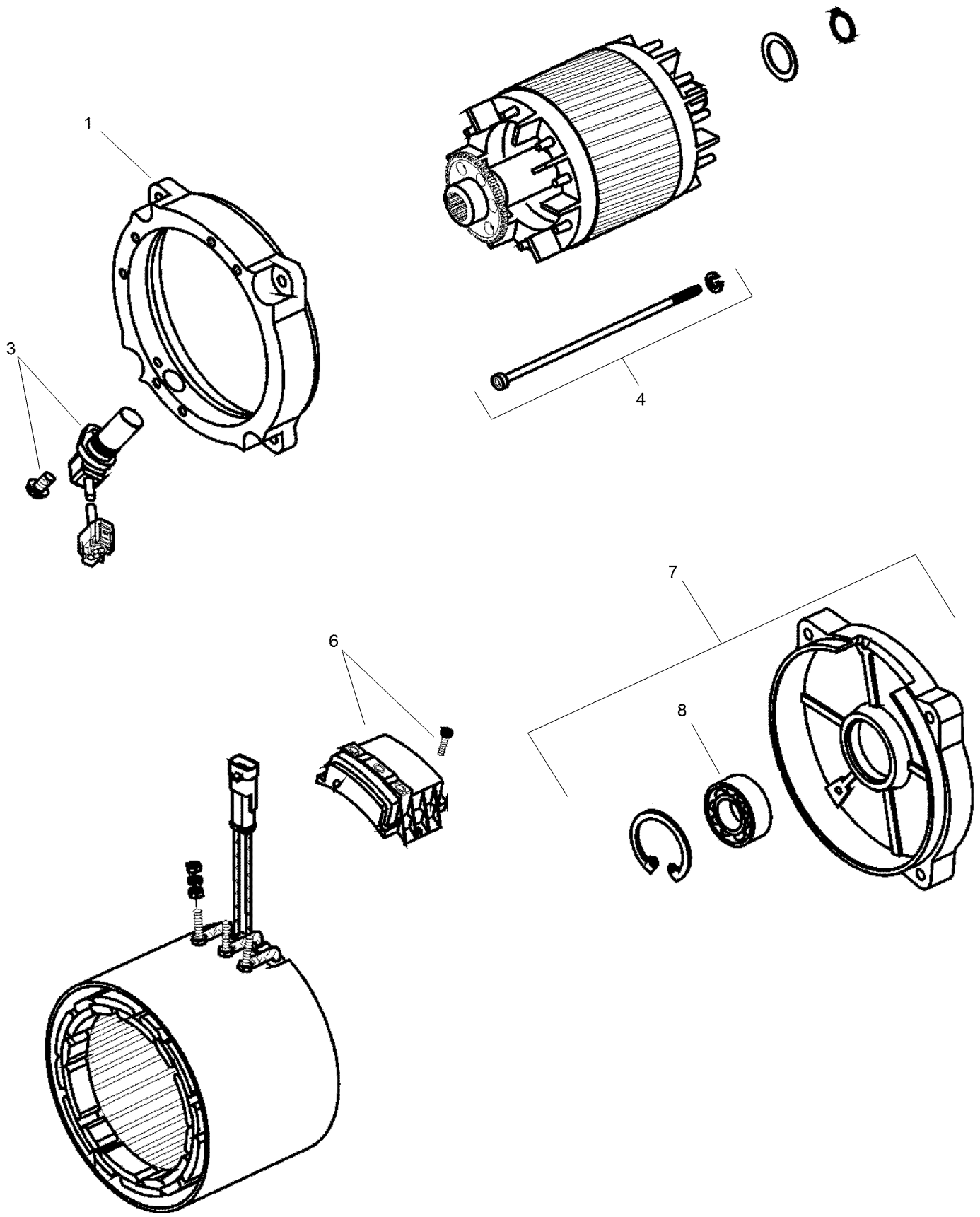

Electric Motor Assembly No. 137-6936 (continued)

Ref.	Part Number	Qty.	Description
1	132-4924	1	Bracket-End, Drive
3	132-4925	1	Sensor
4	132-4926	1	Screw
6	132-4927	1	Plate-Connection
7	132-4928	1	Bracket-End, Rear
8	132-4929	1	Bearing

Dash Electrical Components Assembly

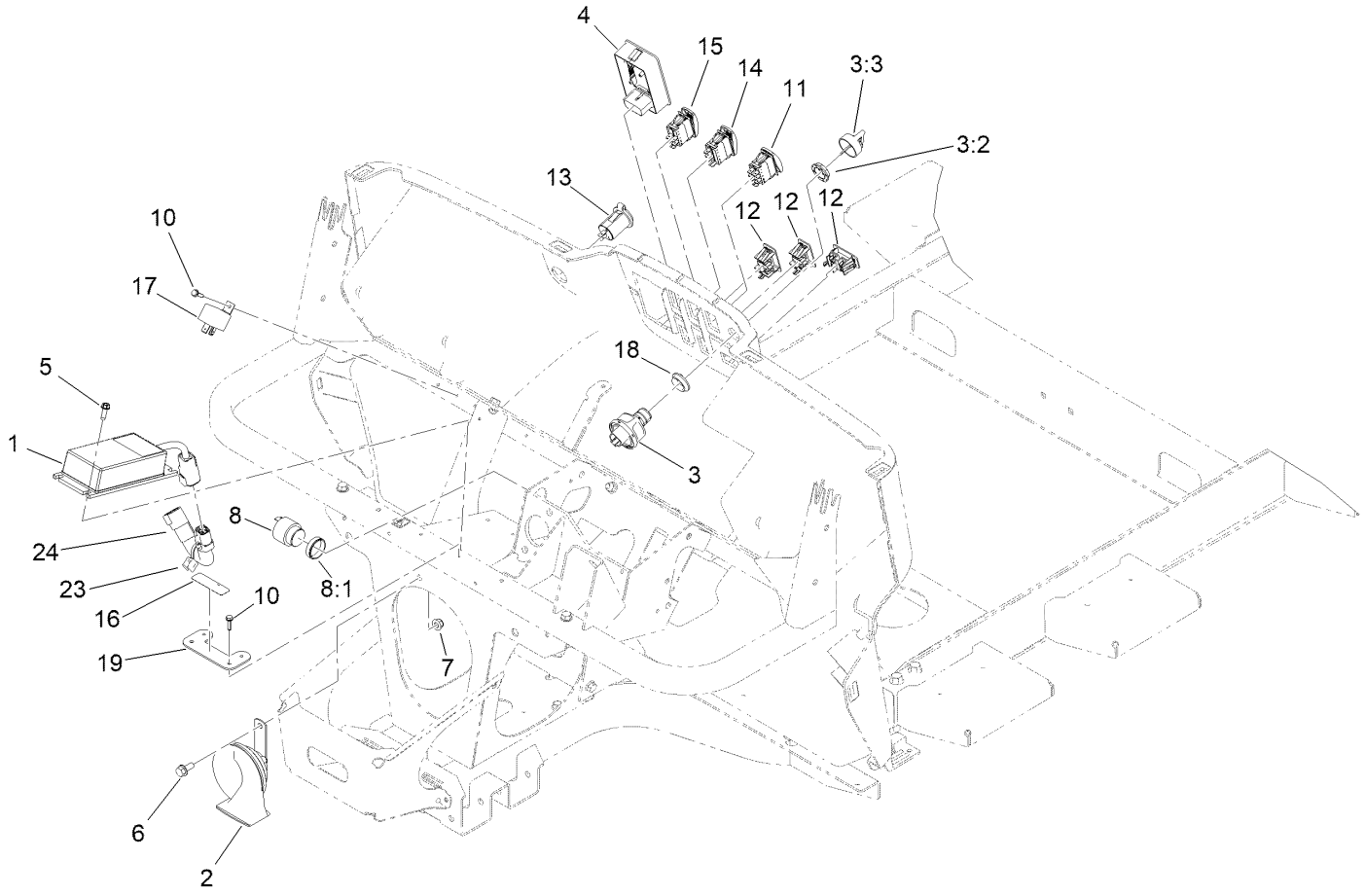

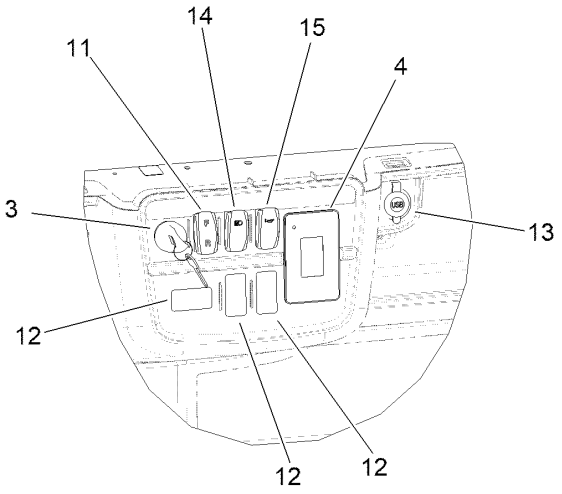

DASH VIEW

Dash Electrical Components Assembly (continued)

Ref.	Part Number	Qty.	Description
1	144-6975	1	Converter DC-DC
2	107-0358	1	Horn
3	122-2513	1	Switch-Ignition, Suns
3:1	121-5160	1	Nut-Hex ●
3:2	122-2704	1	Nut-Face, M22 (Plastic)
3:3	121-5162	1	Set-Key, Ignition
4	122-2152	1	Controller, Tdm-1601
5	49-2040	2	Screw-HWHTF
6	3234-5	1	Screw-HHF
7	104-8300	1	Nut-HF, NI
8	80-9330	1	Audio Alarm ASM
8:1	104-5107	1	Nut-Plastic, Knurled
10	100-4351	5	Screw-HWH
11	122-2654	1	Switch-Rocker, On-None-On
12	119-7791	3	Plug-Hole
13	140-7955	1	Port-Power, USB
14	144-2405	1	Switch-Rocker, On-None-On
15	144-2415	1	Switch-Rocker, (On)-None-Off
16	144-5576	1	Decal-Fuse Block, 12V/60V
17	122-3199	1	Relay - Dg57CM
18	145-7110	1	Adapter-Switch, Key
19	144-5367-03	1	Bracket-Fuse
23	32180-078	1	Clip-Edge
24	122-4089	1	Harness-Wire DC-DC Ground Jumper

● Not illustrated

Electrical Assembly

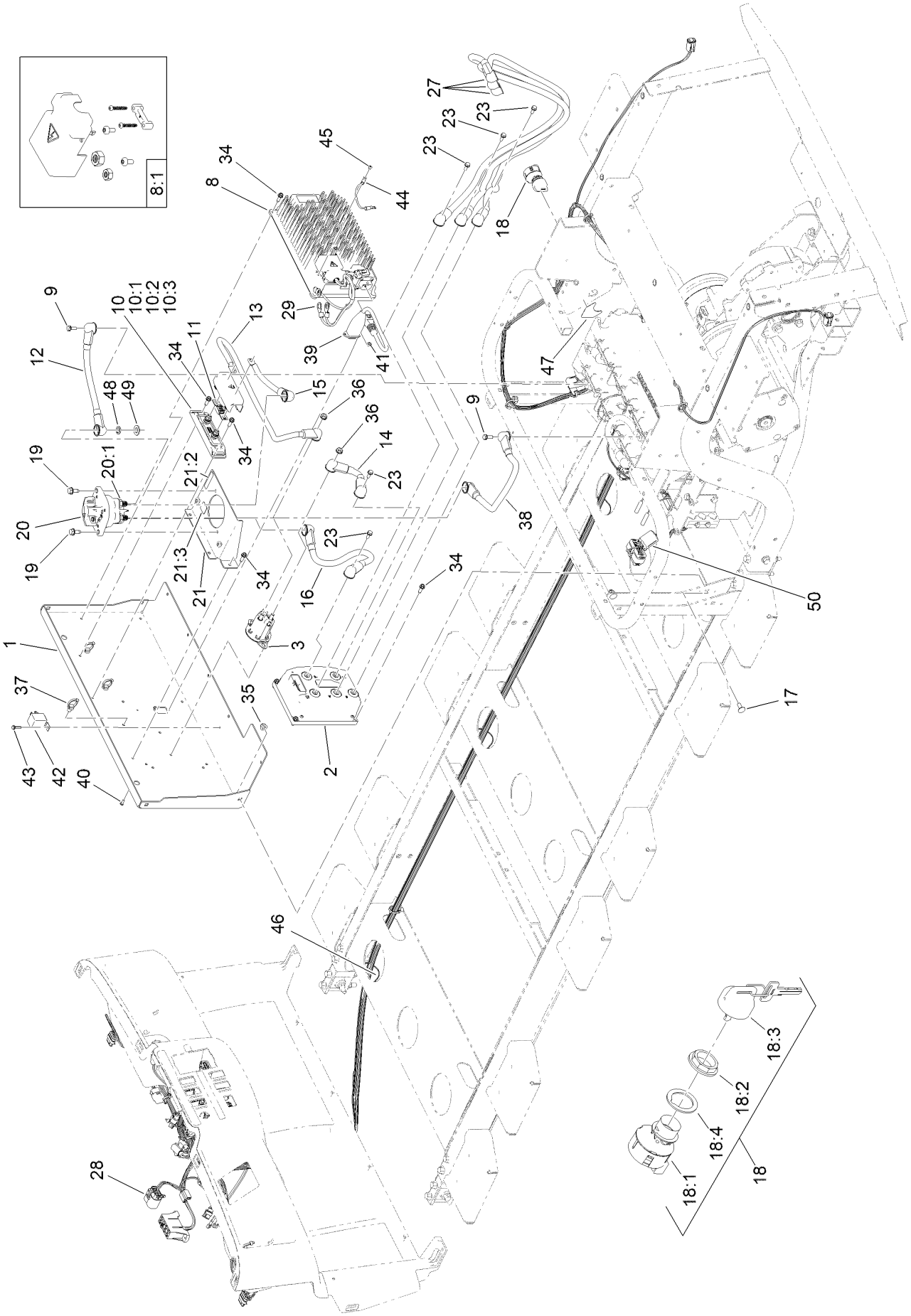

Electrical Assembly (continued)

Ref.	Part Number	Qty.	Description
1	145-7167-03	1	Plate-Electrical
2	145-5050	1	Inv/Ctrlr-48V,185Arms
3	122-2616	1	Contactor-Powerseal
8	144-5475	1	Charger-Onboard, 900W
8:1	140-2494	1	Charger Kit-Service
9	145-5783	2	Screw-Sems
10	161-6249	1	Holder-Fuse
10:1	136-8682	4	Washer-Lock
10:2	3256-74	8	Washer-Flat
10:3	117-4059	4	Nut-Hex
11	122-2561	1	Fuse-200A
12	147-3879	1	Cable-Battery,Rd ASM
13	147-3881	1	Cable-Battery,Rd ASM
14	147-3882	1	Cable-Battery,Rd ASM
15	147-3880	1	Cable-Battery,Rd ASM
16	147-3884	1	Cable-Battery,Bk ASM
17	3230-23	4	Bolt-CARR
18	110-2580	1	Switch-Key, Supervisor
18:1		1	Switch-Key ●
18:2	108-8660	1	Nut-Mounting
18:3	110-5221	1	Set-Key, Supervisor
18:4	108-8659	1	Washer-Backup
19	32144-70	2	Screw-HWHTF
20	122-0603	1	Switch-Disconnect
20:1	33006-00	1	Nut-HF
21	147-3964	1	Disconnect Bracket ASM
21:2	120-9570	1	Decal-Warning
21:3	145-7345	1	Decal-Voltage, High
23	145-5782	5	Screw-Sems
27	145-7279	3	Cable-Battery,Rd ASM
28	122-2322	1	Harness-Wire, Vista, Electric
29	122-2703	1	Harness-Wire, Charger Power Interface
34	49-2040	15	Screw-HWHTF
35	104-8300	4	Nut-HF, NI
36	107-0380	2	Nut-HF
37	32180-030	3	Clip-Tie
38	147-3883	1	Cable-Battery,Bk ASM
39	145-7147	1	Cordset W/Filter
40	3250-26	2	Screw-PPH
41	3296-54	2	Nut-Lock
42	122-3200	1	Relay
43	100-4351	1	Screw-HWH
44	122-2792	1	Harness-Wire, Charger Bonding
45	161-1826	2	Screw-Ground
46	3290-378	3	Tie-Cable
47	140-0924	1	Decal-Mode
48	HDW14457	4	Split Lock Washer,1/2,ST/ST,18-8
49	147-3238	4	Washer-Flat
50	147-8183	2	Ferrite, Snap-On

● Not serviced separately

Attachments and Accessories

For 08928 — Vista 8 Passenger Lithium Shuttle Vehicle

Product Name	Model/Part
Rear View Mirror Kit	08141
Folding Windshield Kit	08220
Beige Canopy, Vista 8 Passenger Shuttle Vehicle	08223
Beacon Kit	08225
Cargo Box, Vista Shuttle Vehicle	08228
Powercord-AC, Europe	107-0382
Powercord-AC, U.K.	107-0383
Powercord-AC	107-0384
External Antenna Kit, Wireless Hourmeter System	115-9524
Base Station Kit, Wireless Hourmeter System	115-9542
Repeater Kit, Wireless Hourmeter System	115-9543
Wide Angle Mirror Kit, Utility Vehicle with Canopy	133-1009
Wide Angle Mirror Kit	133-1038
Universal Wireless Hourmeter Kit	144-2436
Turn Signal Kit	144-5587
Battery ASM	145-5385
Side Mirrors Kit	145-7140
Energy Expansion Kit, Vista Shuttle Vehicle	147-4090

Notes:

Notes:

Notes:

TORO®

Count on it.