Form No. 3484-278 Rev A

TORO®

Count on it.

Parts Catalog

Dingo® TXL 2000

Tool Carrier

Model No. 22530—Serial No. 421300000 and Up

Register at www.Toro.com.
Original Instructions (EN)

3484-278 A

Ordering Replacement Parts

To order replacement parts, please supply the part number, the quantity, and the description of each part desired.

Understanding Reference Numbers

Each identified part in an illustration has a reference number. The reference number for a part also appears in the parts list, along with other information about the part.

This catalog uses two special reference number formats, one to indicate parts in a service assembly and another to indicate the quantity of a given part in an illustration.

Service Assembly Reference Numbers

Parts in service assemblies have reference numbers in the form a:b. The a represents the reference number of the entire service assembly and the b represents a sequential number unique to each part within the service assembly.

For example, a wheel assembly might be identified by reference number 6, the tire by 6:1, the valve by 6:2, and the wheel by 6:3. When you order the assembly identified by reference number 6, you receive all parts identified by reference numbers 6:1,6:2, and 6:3. However, you may also order any part individually. Reference numbers of this type appear in illustration and in parts lists.

Reference Numbers Indicating Quantity

In an illustration, if a reference number indicates more than one part, the reference number has the form nX y. The n represents the quantity of the part, the X is the multiplication symbol, and the y represents the reference number.

For example, in an illustration, the reference number 2X 37 means that two of the parts identified by reference number 37 are indicated.

Contents

Frame Assembly . . . 6
Frame Assembly No. 163-8897 . . . 8
RH Fuel Tank Assembly No. 133-6814 . . . 10
LH Fuel Tank Assembly No. 133-6991 . . . 12
Track Mount Assembly . . . 14
LH Track Assembly . . . 16
Track Drive Assembly . . . 18
RH Track Assembly . . . 20
Engine and Air Cleaner Assembly . . . 22
Air Cleaner Assembly No. 99-5410 . . . 24
Engine Mount and Air Intake Hose Assembly . . . 26
Fuel Pump and Water Seperator Assembly . . . 28
Fuel Filter and Hose Assembly . . . 30
Radiatior and Fan Assembly . . . 32
Radiator Hose Assembly . . . 34
Lift Valve and Pump Assembly . . . 36
Spool Lock Loader Valve Assembly No. 161-9450 . . . 38
Gear Pump Assembly No. 133-0281 . . . 40
Auxiliary Hydraulic Assembly . . . 42
Auxiliary Manifold Assembly No. 136-4872 . . . 44
Tandem Pump Assembly . . . 46
Control Console Assembly . . . 48
Loader Arm Assembly . . . 50
Upper Loader Arm Assembly No. 138-4730 . . . 52
Lower Loader Arm Assembly No. 138-4731 . . . 54
Hydraulic Cylinder Assembly No. 139-5718 . . . 56
Hydraulic Cylinder Assembly No. 139-5719 . . . 58
Qtach Assembly No. 132-8468 . . . 60
Hydraulic Cylinder Assemby No. 161-6930 . . . 62
Platform Assembly . . . 64
Hood and Access Panel Assembly . . . 66
Electrical Assembly . . . 68
Main Wire Harness Assembly No. 122-3967 . . . 70
Crankcase Assembly . . . 72
Oil Pan Assembly . . . 74
Oil Dipstick and Guide Assembly . . . 76
Oil Pump Assembly . . . 78
Cylinder Head Assembly . . . 80
Inlet and Exhaust Manifold Assembly . . . 82
Rocker Arm Assembly . . . 84
Cylinder Head Cover Assembly . . . 86
Gear Case Assembly . . . 88
Oil Filter Cartridge Assembly . . . 90
Main Bearing Case Assembly . . . 92
Piston and Crankshaft Assembly . . . 94
Cam Shaft and Idle Gear Assembly . . . 96
Flywheel Assembly . . . 98
Fuel Pump (Mechanical) Assembly . . . 100
Fuel Camshaft Assembly . . . 102
Supply Pump Assembly . . . 104
Fuel Filter Assembly . . . 106
Separator Assembly . . . 108
Injector and Glow Plug Assembly . . . 110
Injection Pipe Assembly . . . 112

© 2026—The Toro® Company

8111 Lyndale Avenue South
Bloomington, MN 55420

Contact us at www.Toro.com.
Printed in the USA.

All Rights Reserved

Contents (continued)

Fuel Pump (Electrical) Assembly . . . 114
Common Rail Assembly . . . 116
Alternator and Pulley Assembly . . . 118
Alternator Components Assembly . . . 120
Starter Installation Assembly . . . 122
Starter (Component Parts) Assembly . . . 124
Oil Switch and Thermometer Assembly . . . 126
Injector Harness Assembly . . . 128
Wire Harness Assembly . . . 130
Wire Harness Bracket Assembly . . . 132
Water Flange and Thermostat Assembly . . . 134
Water Pipe Assembly . . . 136
Water Pump Assembly . . . 138
Inlet Manifold Assembly . . . 140
Inlet Hose Assembly . . . 142
Exhaust Manifold Assembly . . . 144
Exhaust Gas Recirculation Assembly . . . 146
Exhaust Gas Recirculation Cooler Assembly . . . 148
Turbo Charger Assembly . . . 150
Diesel Oxidation Catalyst Muffler Assembly . . . 152
Diesel Oxidation Catalyst Muffler Bracket Assembly . . . 154
Oil Separator Assembly . . . 156
Oil Separator (Component Parts) Assembly . . . 158
Oil Pipe (Turbo Charger) Assembly . . . 160
Oil Cooler Assembly . . . 162
Electronic Control Unit Assembly . . . 164
Miscellaneous Engine Parts . . . 166
Operator Manual . . . 168
Attachments and Accessories . . . 170

Frame Assembly

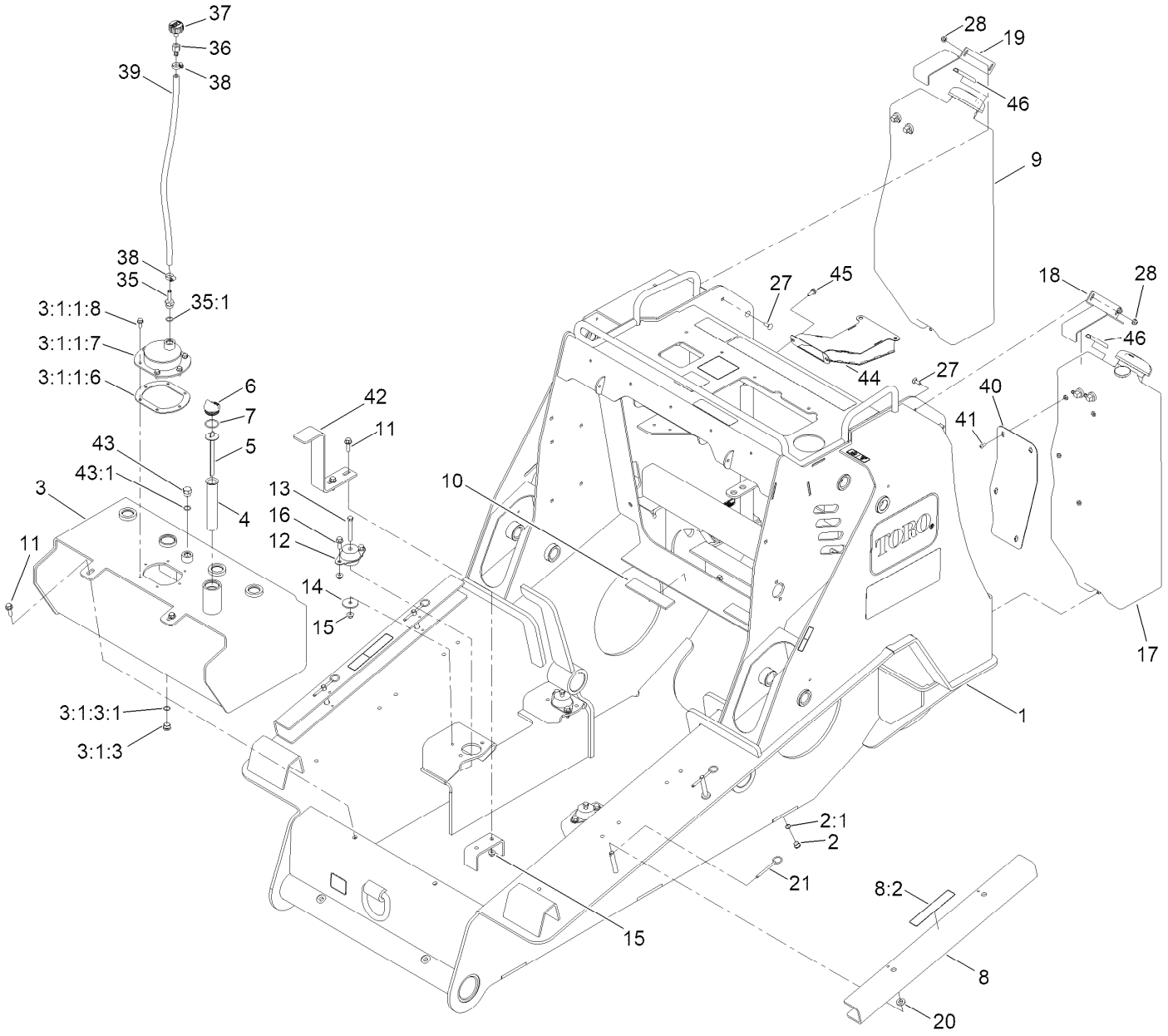

Frame Assembly (continued)

Ref.	Part Number	Qty.	Description
1	163-8897	1	Frame ASM
2	353-989	1	Plug-Hex, Hollow
2:1	237-42	1	O-Ring
3	131-9336-03	1	HYD Tank ASM
3:1:1:6	107-3557	1	Gasket-Cover, Access
3:1:1:7	138-2342-03	1	Cover-Access
3:1:1:8	98-9940	6	Screw-HHF
3:1:3	353-988	1	Plug-Hex
3:1:3:1	237-79	1	O-Ring
4	61-2790	1	Filter-Screen
5	130-7686	1	Dipstick
6	93-7498	1	Plug-Plastic
7	237-101	1	O-Ring
8	138-4724	2	Arm-Locking
8:2	115-4858	2	Decal-Danger
9	133-6814	1	RH Fuel Tank ASM
10	112-2401	2	Pad-Rubber
11	3234-24	4	Screw-HHF
12	136-4885	4	Mount-Engine
13	323-14	4	Screw-HH
14	139-1726	4	Washer-Rebound
15	119-4042	14	Nut-HF, NI

Ref.	Part Number	Qty.	Description
16	3234-11	8	Screw-HHF
17	133-6991	1	LH Fuel Tank ASM
18	137-0379-03	1	Bracket-Tank LH
19	137-0380-03	1	Bracket-Tank RH
20	83-1470	4	Washer-Neoprene
21	136-6125	4	Pin-Ring
27	3230-16	4	Screw-CARR
28	119-4041	4	Nut-HF
35	115-2231	1	Fitting-STR
35:1	237-79	1	O-Ring
36	354-94	1	Fitting-Female, Barbed
37	68-6150	1	Breather
38	2412-36	2	Clamp-Hose
39	114-0832	1	Hose-Fuel
40	138-4721-03	1	Plate-Guard, Tank
41	3274-31	4	Screw-HSBH
42	138-2337-03	1	Strap-Hold Down
43	353-550	1	Plug-HYD, HH
43:1	237-79	1	O-Ring
44	138-2382-03	1	Intake Chute ASM
45	32104-32	4	Screw-HWH
46	138-2449	2	Seal-Bulb

Frame Assembly No. 163-8897

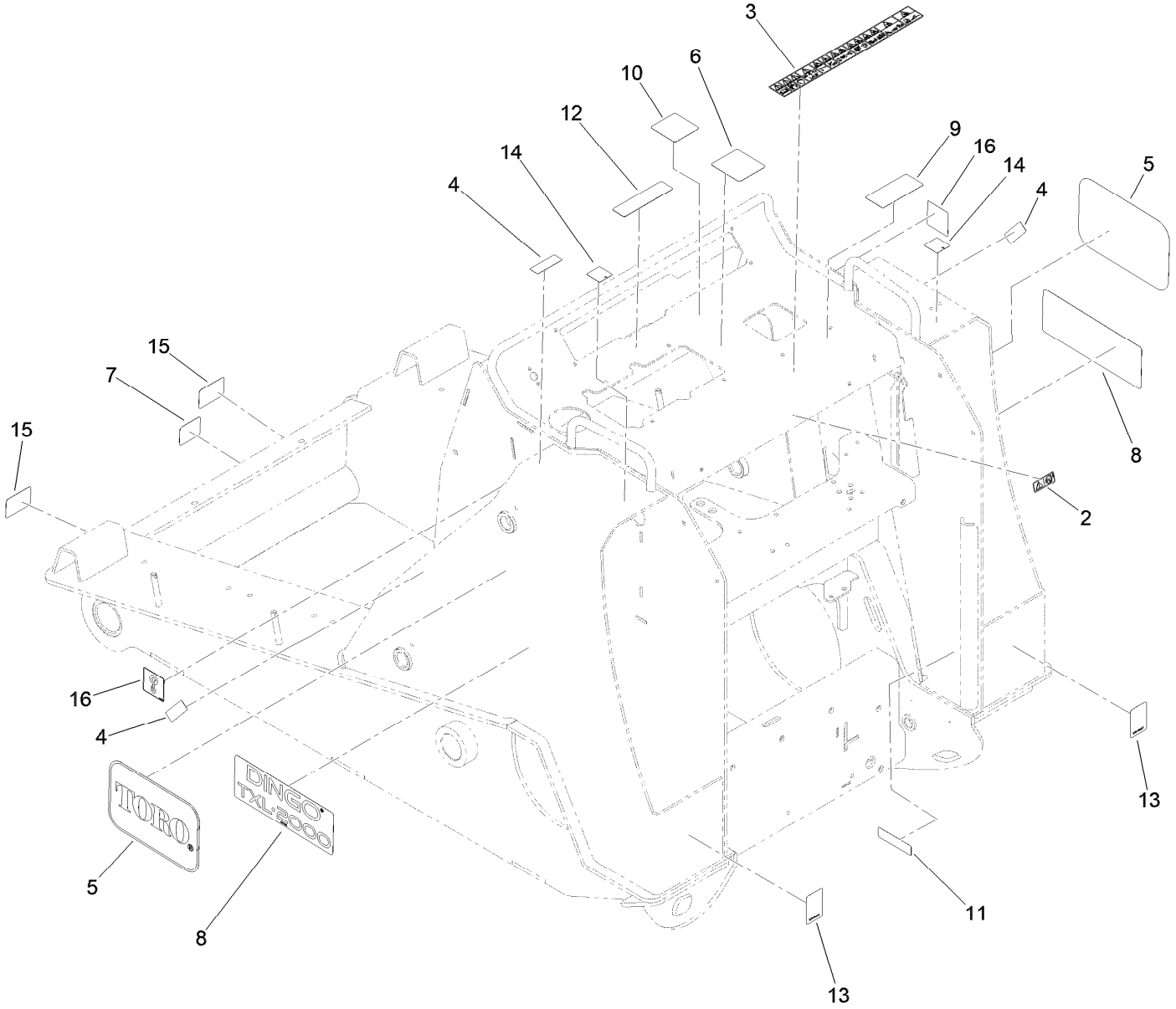

Frame Assembly No. 163-8897 (continued)

Ref.	Part Number	Qty.	Description
2	115-2047	1	Decal-Surface, Hot
3	145-0637	1	Decal-Safety
4	120-0625	3	Decal-Warning
5	164-1472	2	Decal-Toro Logo, 10.96X7.26Rnr
6	161-9448	1	Decal-Controls
7	125-6694	1	Decal-Tie Down
8	137-5418	2	Decal
9	139-1162	1	Decal-Safety
10	139-4729	1	Decal-Controls, Loader
11	133-8062	1	Decal-Spark Arrestor
12	136-4863	1	Decal-Arm,Raised
13	100-4627	2	Reflector
14	163-5287	2	Decal, No Smoking/Diesel Fuel
15	125-6139	2	Decal-Lift/Tie Down
16	125-4967	2	Decal-Lift Here

RH Fuel Tank Assembly No. 133-6814

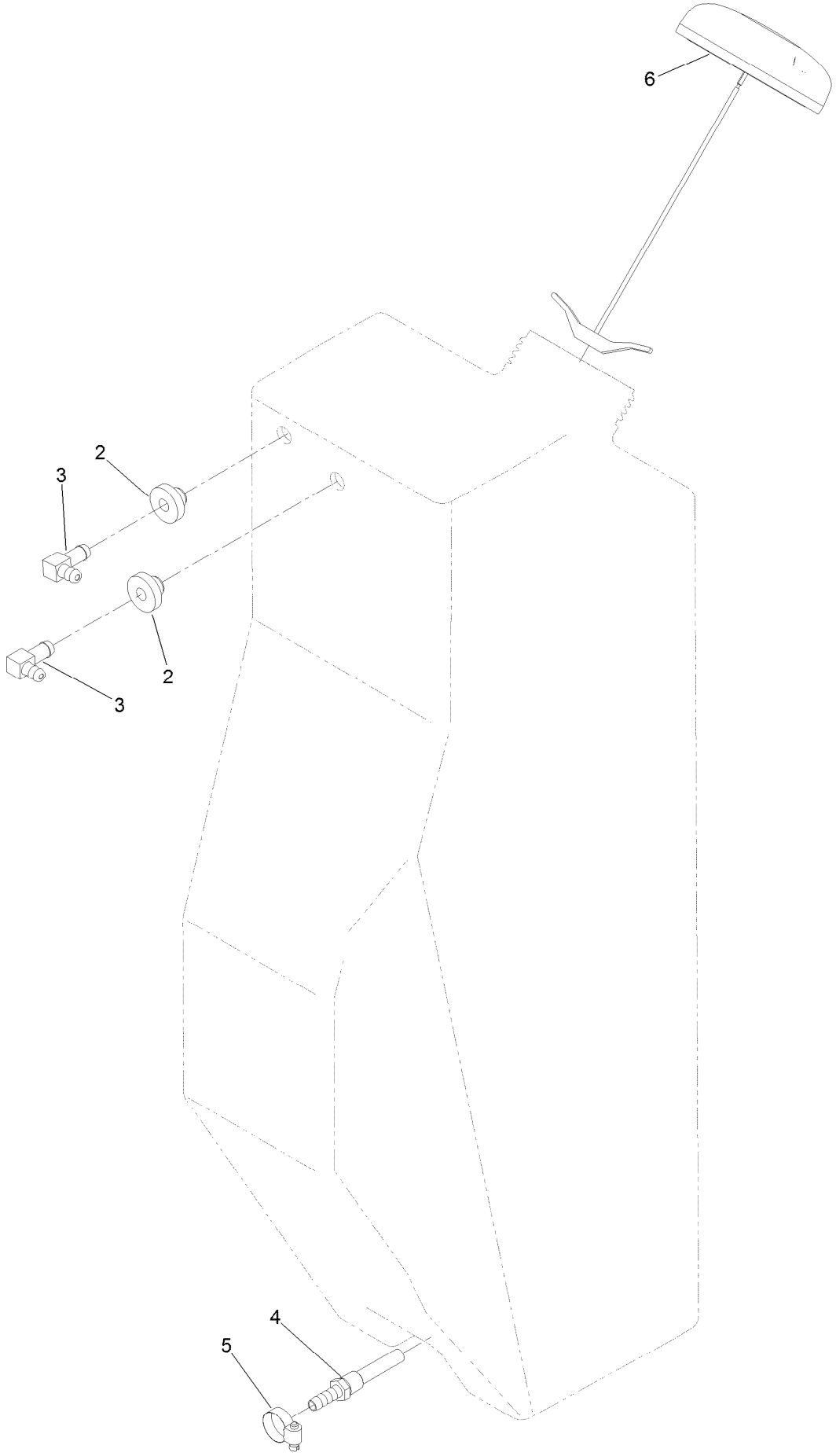

RH Fuel Tank Assembly No. 133-6814 (continued)

Ref.	Part Number	Qty.	Description
2	46-6560	2	Bushing
3	46-6550	2	Fitting-Elbow, 90 DEG
4	112-6374	1	Fitting-Strainer
5	2412-36	1	Clamp-Hose
6	136-4865	1	Cap-Fuel

LH Fuel Tank Assembly No. 133-6991

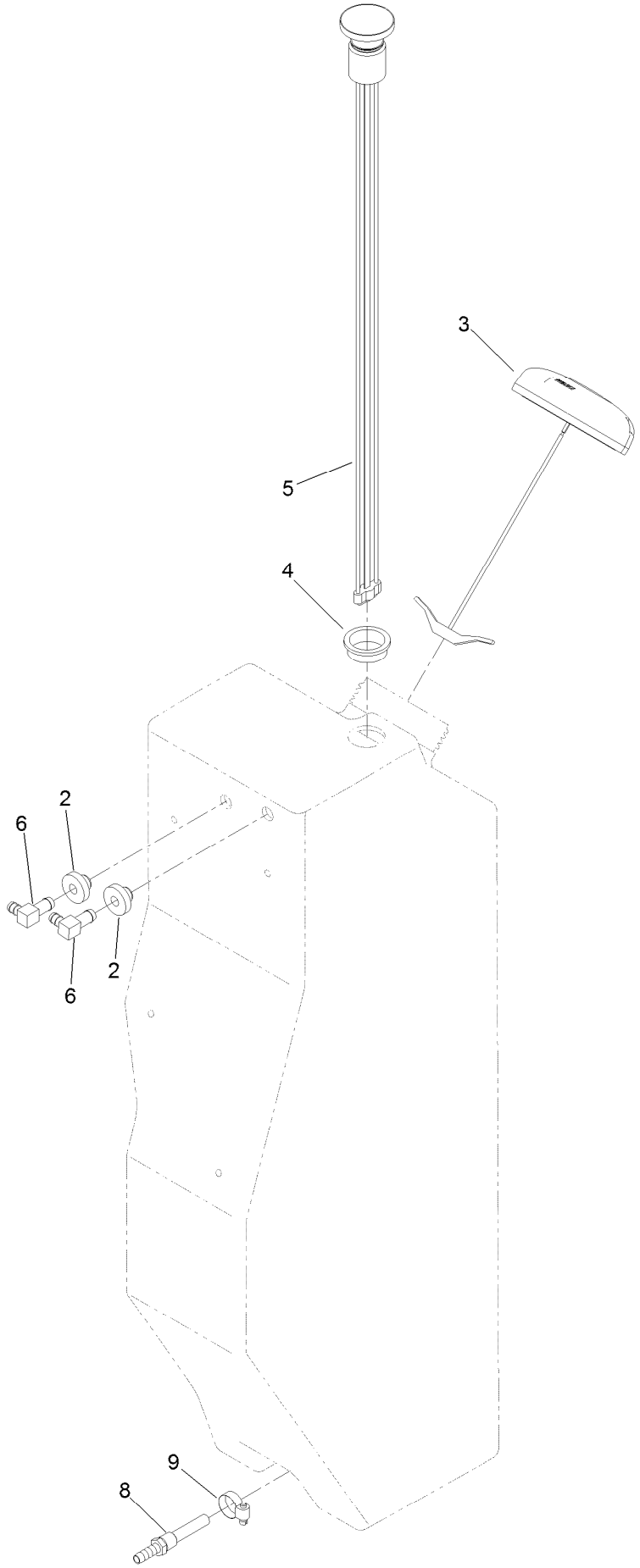

LH Fuel Tank Assembly No. 133-6991 (continued)

Ref.	Part Number	Qty.	Description
2	46-6560	2	Bushing
3	136-4865	1	Cap-Fuel
4	95-8972	1	Grommet
5	133-6992	1	Gauge-Level, Fuel
6	46-6550	2	Fitting-Elbow, 90 DEG
8	112-6374	1	Fitting-Strainer
9	2412-36	1	Clamp-Hose

Track Mount Assembly

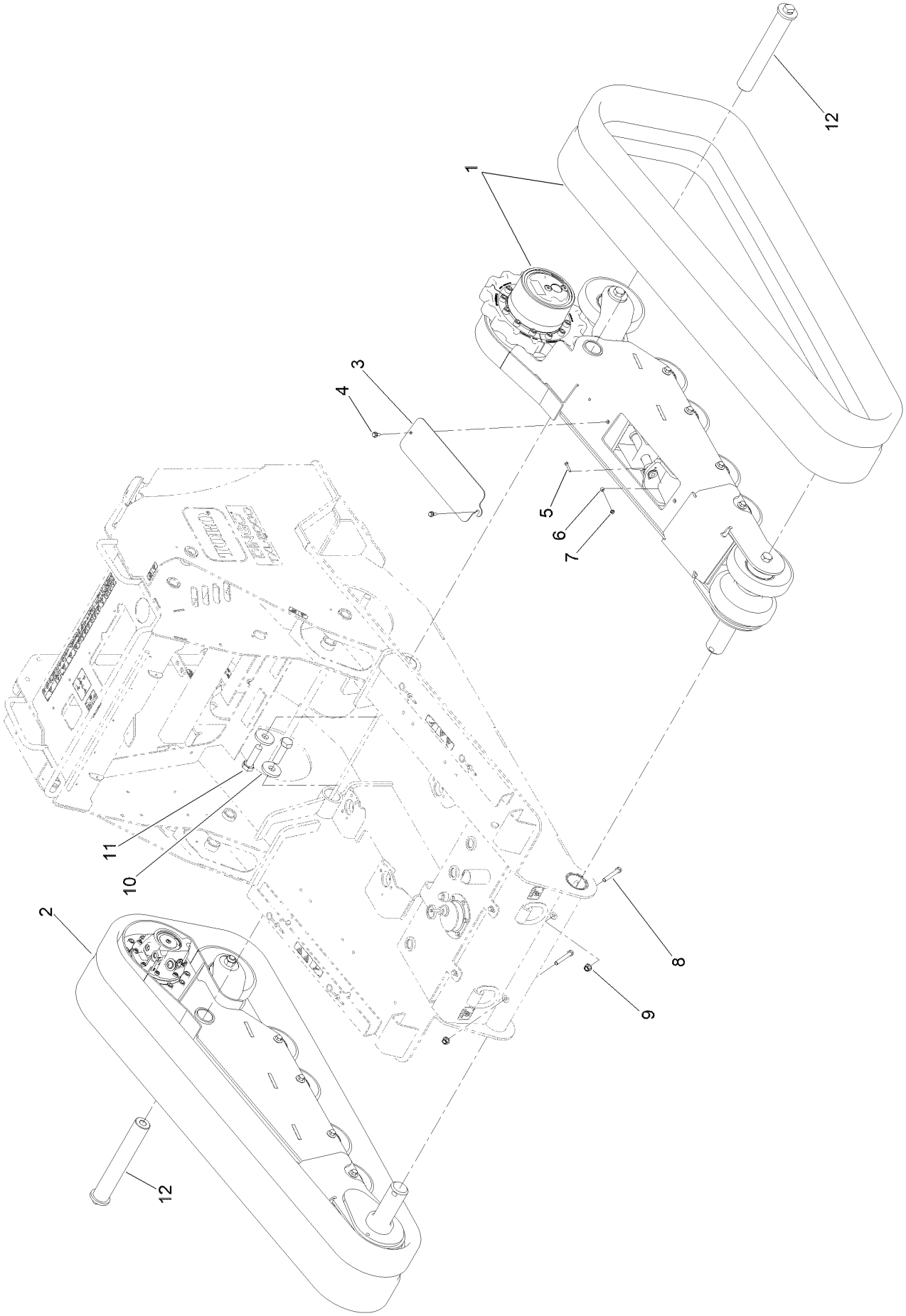

Track Mount Assembly (continued)

Ref.	Part Number	Qty.	Description
1		1	Track ASM, LH ●
2		1	Track ASM, RH ●
3	137-0513-03	2	Cover
4	3234-42	4	Screw-HHF
5	321-9	2	Screw-HH
6	98-4799	2	Spacer
7	32128-32	2	Nut-HHF
8	116-3114	2	Bolt-TAP
9	139-1689	2	Nut-HF
10	133-0287	2	Washer-Wheel
11	AU426-1656	2	Screw-Cap, HH
12	138-2308	2	Shaft-Mount, Rear

● Not serviced separately

LH Track Assembly

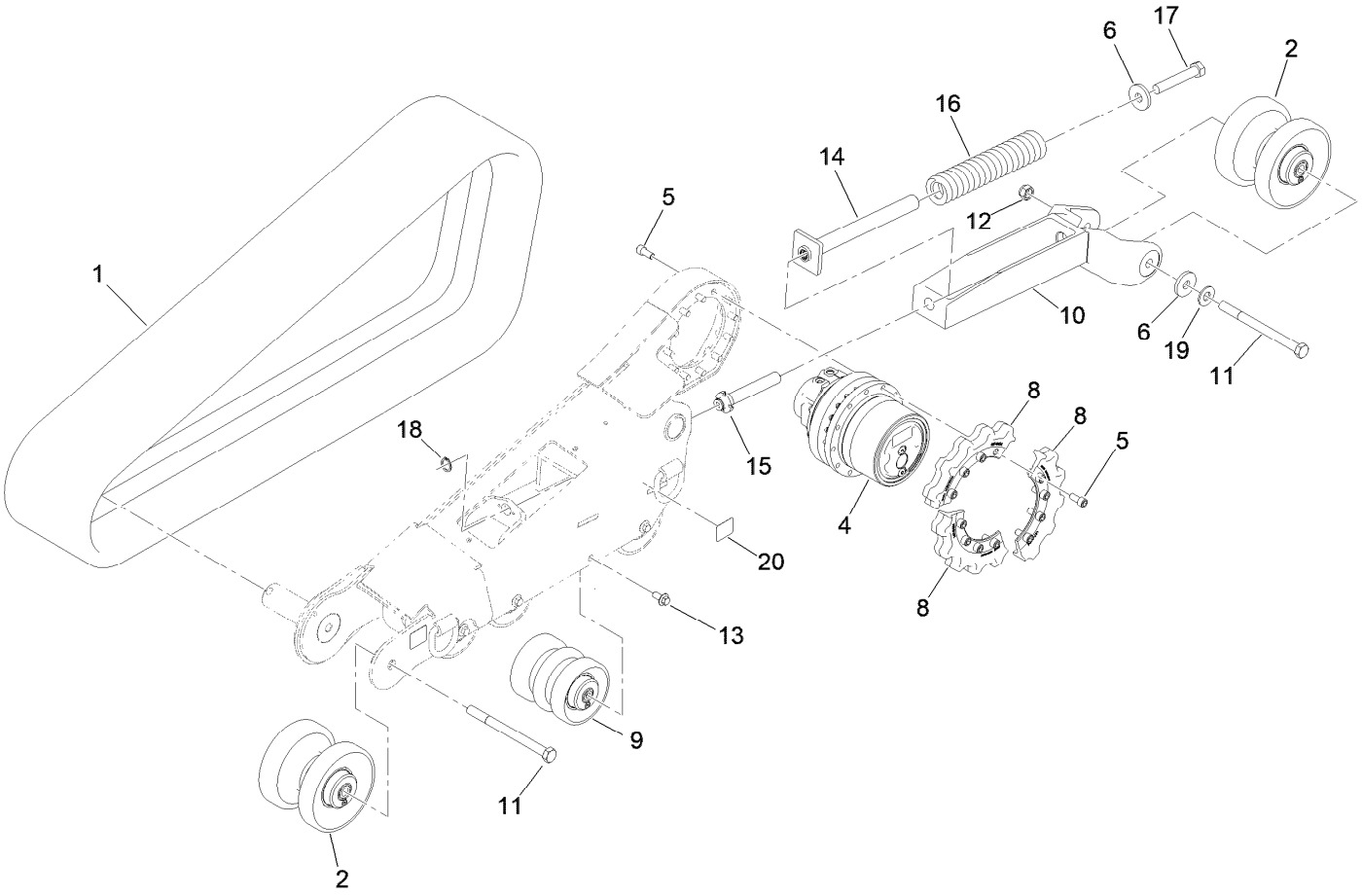

LH Track Assembly (continued)

Ref.	Part Number	Qty.	Description
1	136-4869	1	Track-Mert,
2	147-9128	2	Idler ASM
4		1	Drive-Track ●
5	114-3041	24	Screw-HSH
6	133-0287	2	Washer-Wheel
8	147-9154	3	Sprocket Segment
9	147-9127	4	Roller ASM
10	138-2261	1	Tensioner ASM
11	136-4831	2	Bolt-HH
12	136-4832	1	Nut-Hex
13	138-4699	8	Screw-HHF
14	147-9122	1	Spring Catch
15	147-9150	1	Screw-Tensioner
16	136-4834	1	Spring-Compression
17	139-4839	1	Bolt-TAP
18	32151-77	1	Ring-Retaining, External
19	115-0722	1	Washer-Plain
20	125-6694	2	Decal-Tie Down

● Not serviced separately

Track Drive Assembly

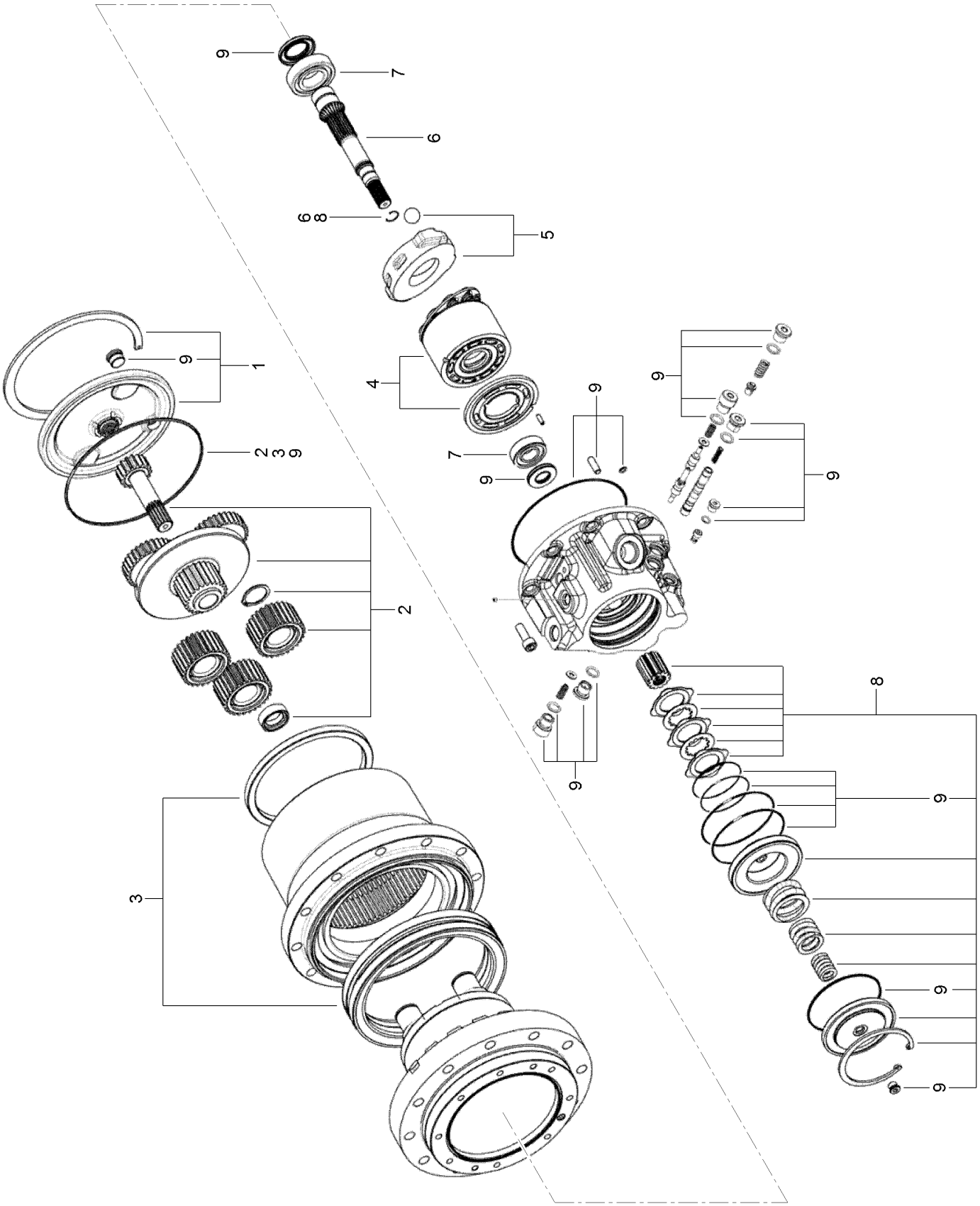

Track Drive Assembly (continued)

Ref.	Part Number	Qty.	Description
1	139-4861	1	Cover ASM
2	139-4862	1	Reduction ASM
3	164-3608	1	Seal-Kit
4	139-4864	1	Cylinder Block ASM
5	139-4865	1	Swashplate Kit
6	139-4866	1	Motor Shaft ASM
7	139-4867	1	Bearings Kit
8	139-4868	1	Parking Brake Kit
9	139-4869	1	Seal Kit

RH Track Assembly

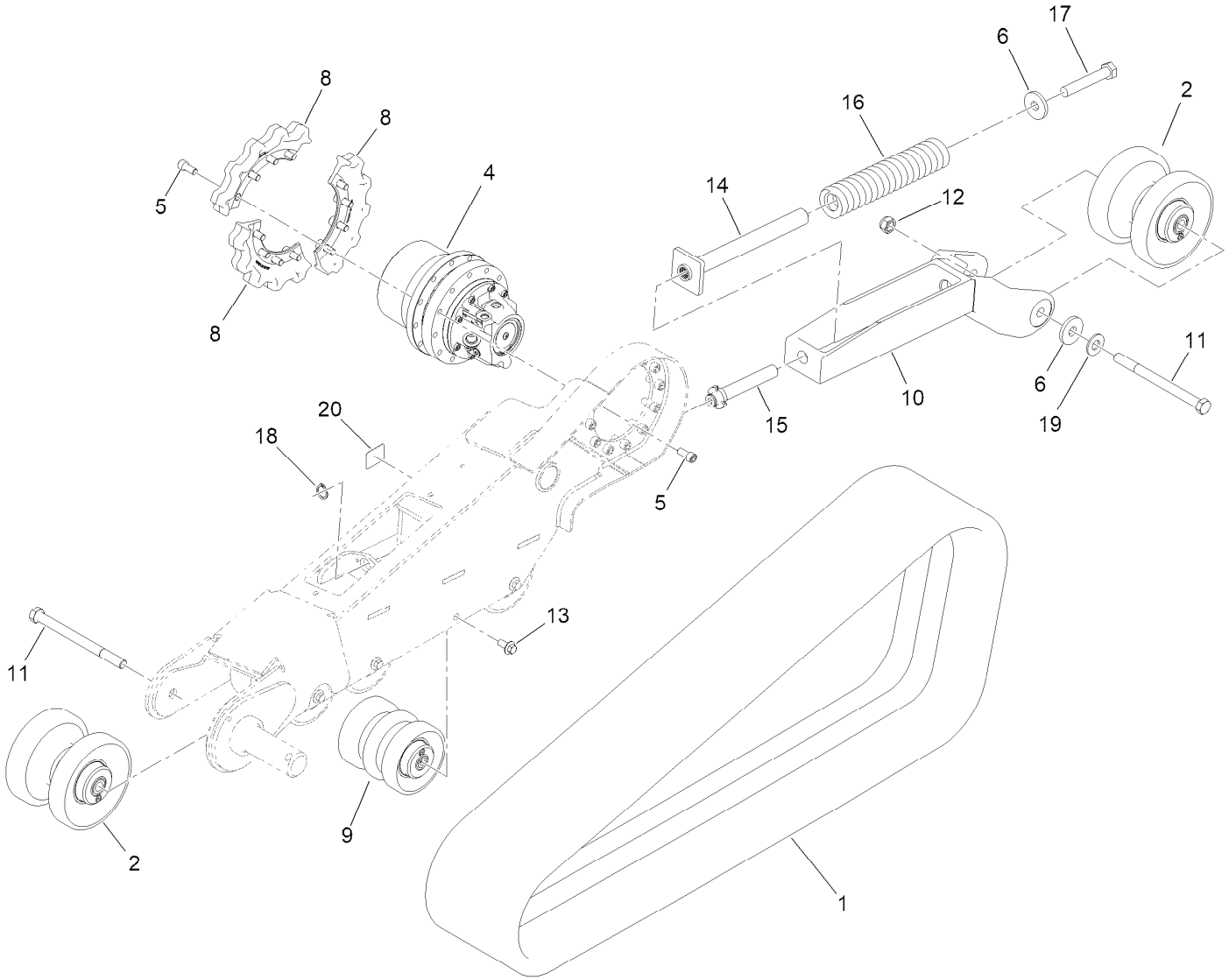

RH Track Assembly (continued)

Ref.	Part Number	Qty.	Description
1	136-4869	1	Track-Mert,
2	147-9128	2	Idler ASM
4		1	Drive-Track ●
5	114-3041	24	Screw-HSH
6	133-0287	2	Washer-Wheel
8	147-9154	3	Sprocket Segment
9	147-9127	4	Roller ASM
10	138-2261	1	Tensioner ASM
11	136-4831	2	Bolt-HH
12	136-4832	1	Nut-Hex
13	138-4699	8	Screw-HHF
14	147-9122	1	Spring Catch
15	147-9150	1	Screw-Tensioner
16	136-4834	1	Spring-Compression
17	139-4839	1	Bolt-TAP
18	32151-77	1	Ring-Retaining, External
19	115-0722	1	Washer-Plain
20	125-6694	2	Decal-Tie Down

● Not serviced separately

Engine and Air Cleaner Assembly

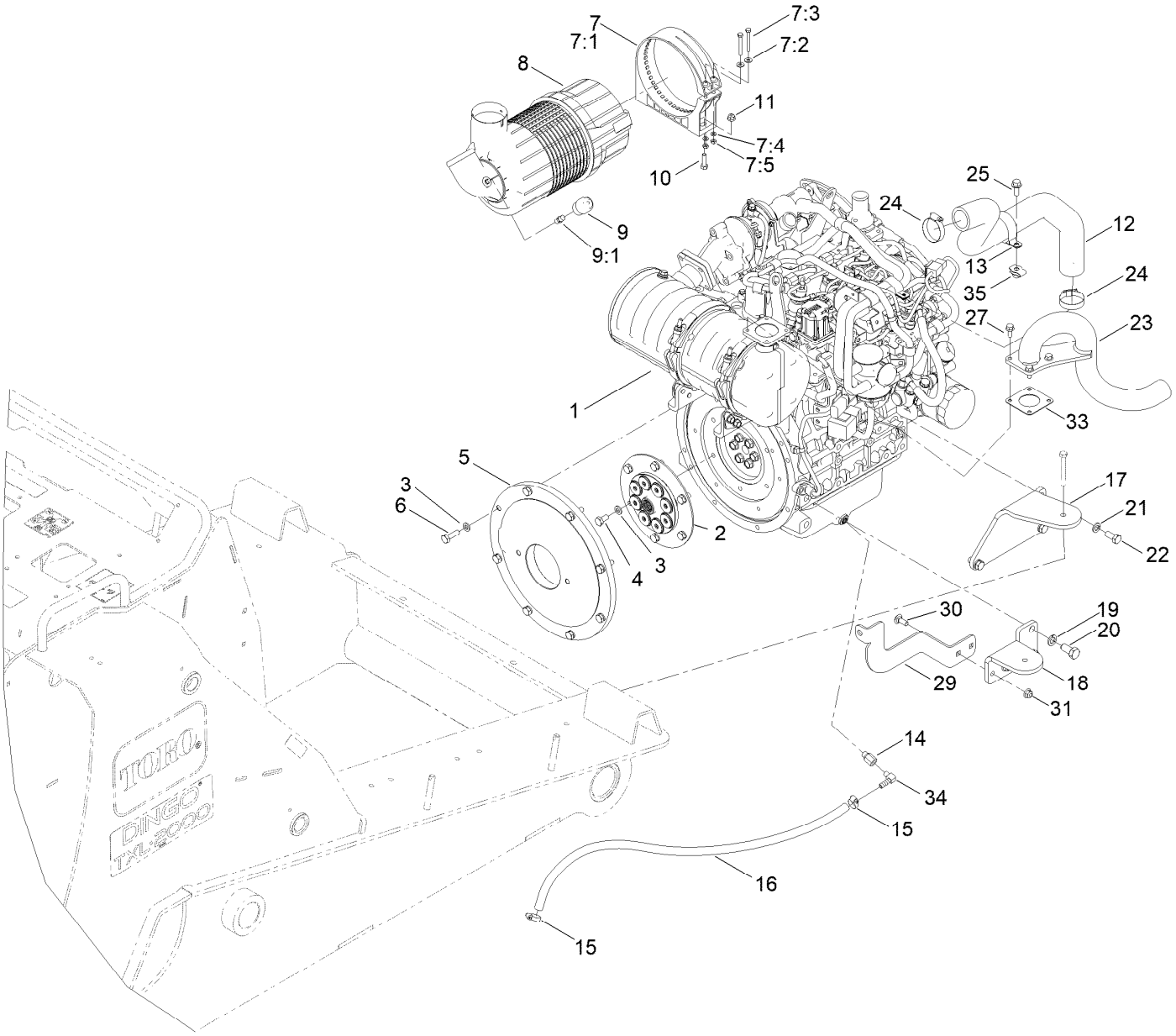

Engine and Air Cleaner Assembly (continued)

Ref.	Part Number	Qty.	Description
1	136-4779	1	Engine-Kubota
2	138-4700	1	Coupler-Spring, Flywheel
3	107-1413	14	Washer-Hardened
4	99-5130	6	Screw-HH
5	132-6120-0P	1	Plate-Flywheel
6	117-5663	8	Screw-HH
7	99-5414	1	Strap-Cleaner, Air
7:1	108-1512	2	Spring
7:2	3256-22	2	Washer-Flat
7:3	33113-050	2	Screw-HH
7:4	33093-00	2	Washer-Flat
7:5	33023-00	2	Nut-Lock
8	99-5410	1	Air Cleaner ASM
9	104-3563	1	Indicator
9:1	94-1416	1	Adapter-Indicator
10	322-16	2	Screw-HH
11	119-4041	2	Nut-HF
12	139-1172	1	Hose-Air, Cooler
13	115-9469	1	Clamp-R
14	136-4867	1	Adapter-Drain
15	2412-36	2	Clamp-Hose
16	133-1621	1	Hose-Drain
17	133-6962-03	1	Mount-Engine
18	133-6964-03	1	Mount-Engine
19	43-5950	2	Washer-Lock, Spring
20	43-3210	2	Screw-HH
21	48-8070	3	Washer-Lock
22	AU514-842	3	Screw-HH
23	133-6973	1	Pipe-Exhaust
24	2412-92	2	Clamp-Hose
25	3234-11	1	Screw-HHF
27	33104-020	4	Screw-HHF
29	138-2331-03	1	Bracket-Pump, RH
30	3231-2	2	Bolt-CARR
31	119-4042	2	Nut-HF, NI
33	100-9333	1	Gasket-Muffler
34	99-7230	1	Fitting-90 DEG
35	105-4886	1	Nut-Tinnerman

Air Cleaner Assembly No. 99-5410

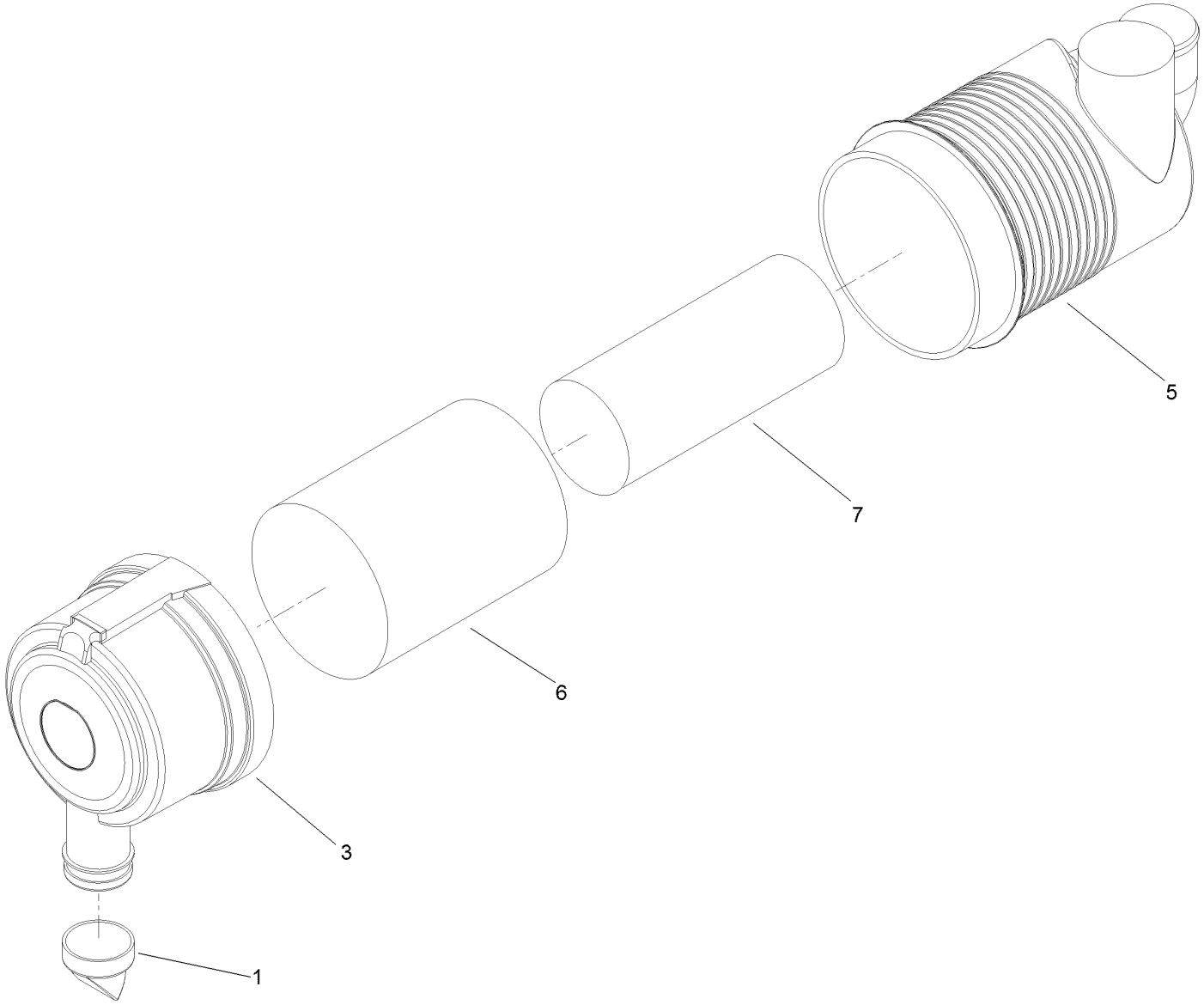

Air Cleaner Assembly No. 99-5410 (continued)

Ref.	Part Number	Qty.	Description
1	104-4258	1	Valve-Vacuator
3	104-4259	1	Cover
5		1	Body ASM ●
6	108-3814	1	Filter-Air
7	108-3816	1	Filter-Air

● Not serviced separately

Engine Mount and Air Intake Hose Assembly

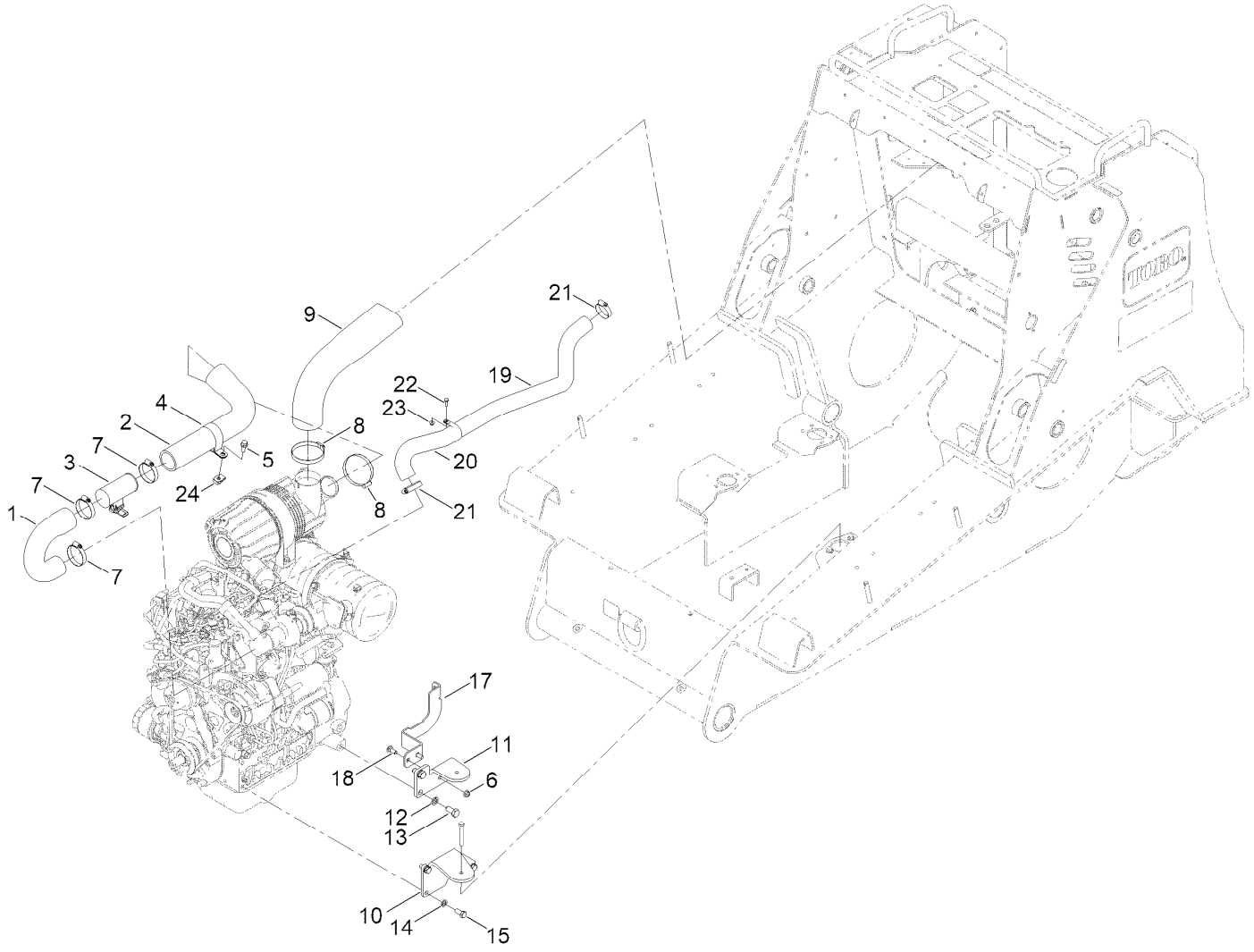

Engine Mount and Air Intake Hose Assembly (continued)

Ref.	Part Number	Qty.	Description
1	133-1622	1	Hose-Intake
2	137-0050	1	Hose-Intake, Air
3	136-4741	1	Sensor
4	2412-102	1	Clamp-R
5	3234-11	1	Screw-HHF
6	119-4042	2	Nut-HF, NI
7	2412-42	3	Clamp-Hose
8	2412-110	2	Clamp-Band/Screw
9	133-1689	1	Hose-Intake
10	133-6967-03	1	Mount-Engine
11	133-6968-03	1	Mount-Engine
12	43-5950	2	Washer-Lock, Spring
13	43-3210	2	Screw-HH
14	48-8070	3	Washer-Lock
15	AU514-842	3	Screw-HH
17	138-2332-03	1	Bracket-Pump, LH
18	3231-2	2	Bolt-CARR
19	137-0140	1	Hose-Air, Cooler
20	2412-148	1	Clamp-R
21	2412-92	2	Clamp-Hose
22	321-4	1	Screw-HH
23	104-7201	1	Nut-HF, NI
24	105-4886	1	Nut-Tinnerman

Fuel Pump and Water Seperator Assembly

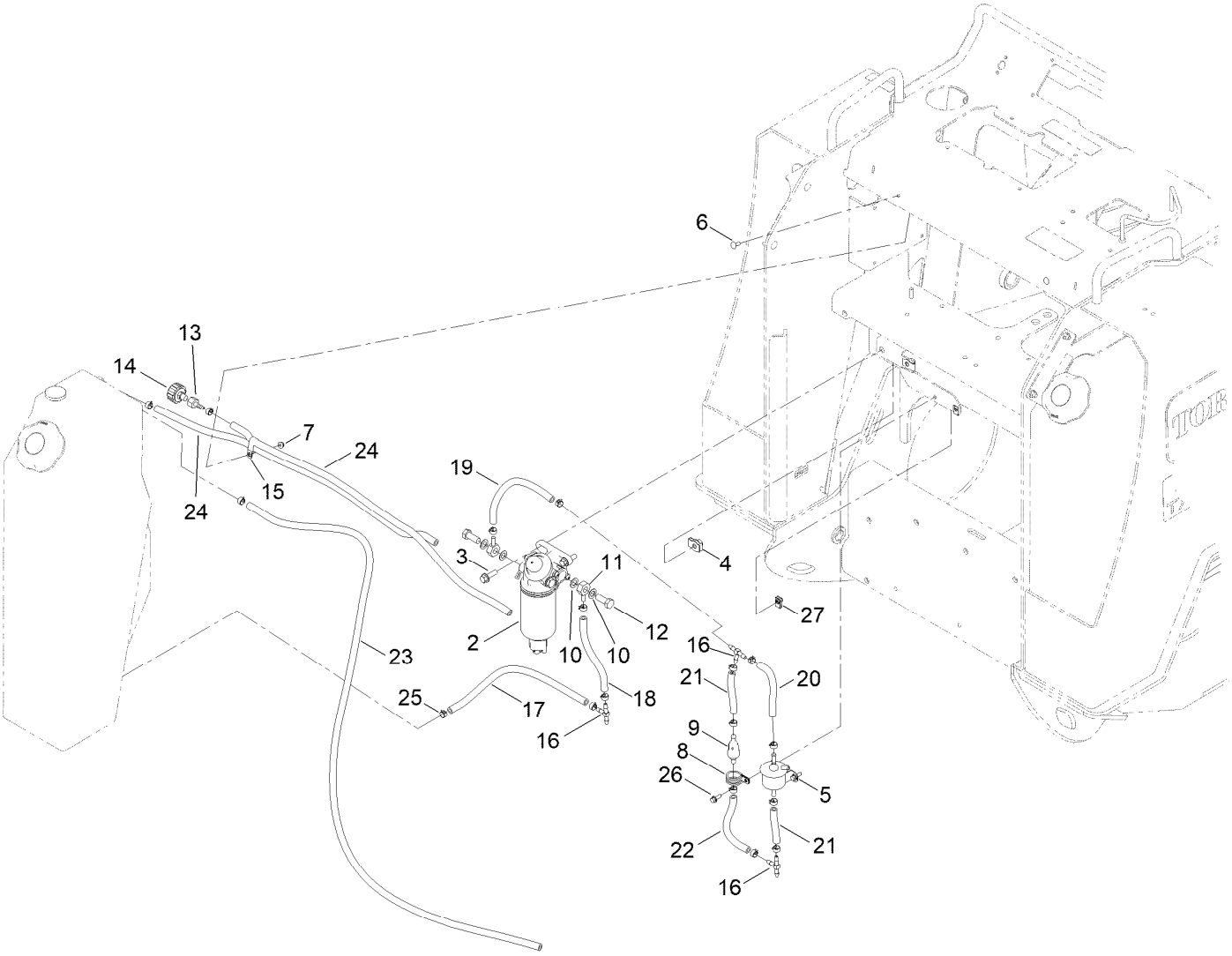

Fuel Pump and Water Seperator Assembly (continued)

Ref.	Part Number	Qty.	Description
2	136-4734	1	Filter-Seperator, Water
3	3234-24	2	Screw-HHF
4	105-4886	2	Nut-Tinnerman
5	139-9642	1	Assy Pump,Fuel
6	3229-1	1	Screw-CARR
7	104-7201	1	Nut-HF, NI
8	132-7590	1	R-Clamp
9	136-4735	1	Valve-Bypass
10	137-0067	4	O-Ring
11	137-0065	2	Adapter-Fuel
12	137-0066	2	Bolt-Joint
13	354-95	1	Fitting-Straight
14	68-6150	1	Breather

Ref.	Part Number	Qty.	Description
15	119-8153	1	Clamp-R, Double Tube
16	99-5005	3	Fitting-Tee, Barbed
17	110-4113	1	Hose-Fuel
18	110-4124	1	Hose-Fuel
19	136-6098	1	Hose-Fuel
20	109-0310	1	Hose-Fuel
21	136-6097	2	Hose-Fuel
22	108-3280	1	Hose-Fuel
23	138-4715	1	Hose-Fuel
24	136-6096	2	Hose-Fuel
25	92-2379	20	Clamp-Hose
26	3234-4	2	Screw-HHF
27	107069	2	Clip

Fuel Filter and Hose Assembly

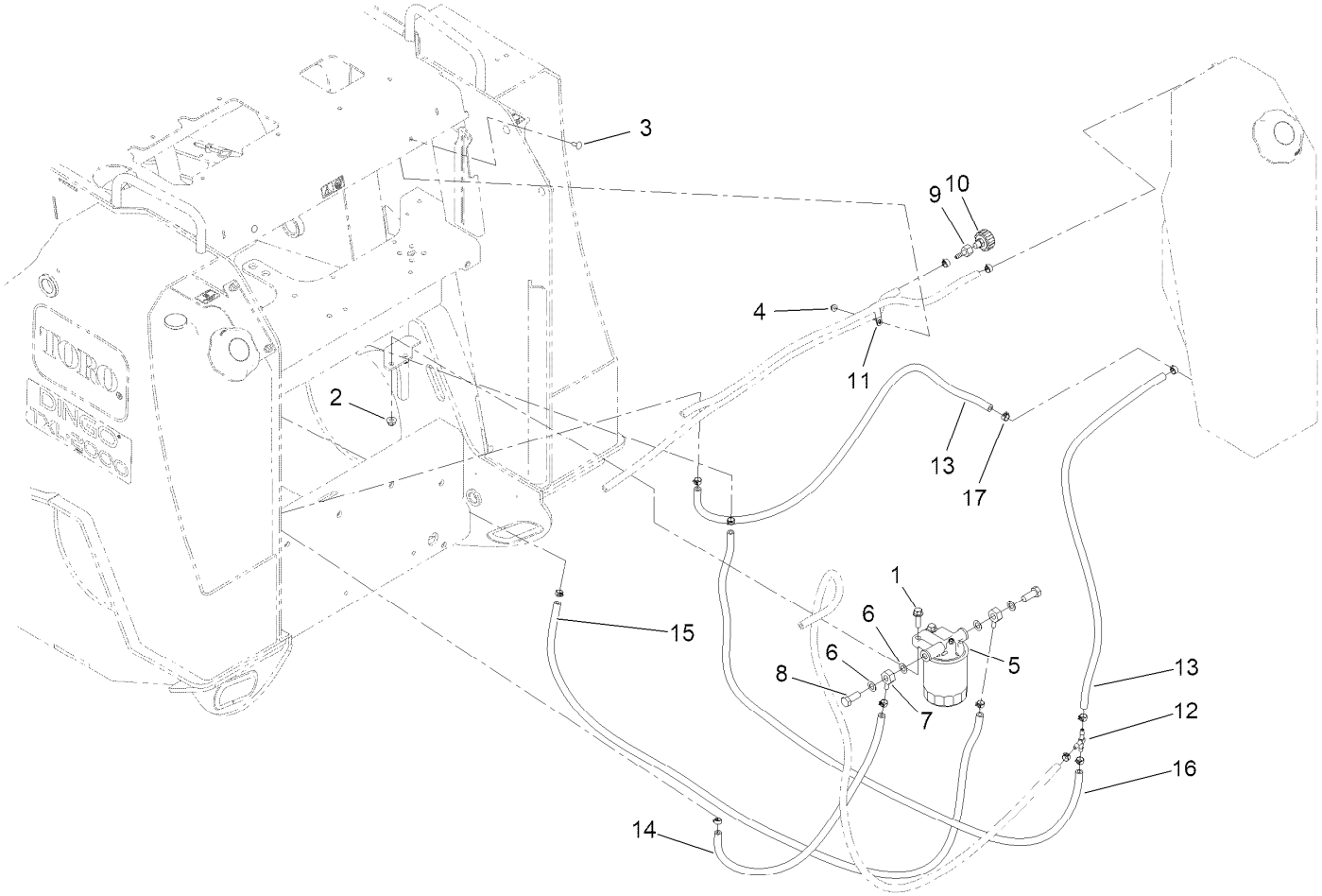

Fuel Filter and Hose Assembly (continued)

Ref.	Part Number	Qty.	Description
1	3234-24	2	Screw-HHF
2	119-4042	2	Nut-HF, NI
3	3229-1	1	Screw-CARR
4	104-7201	1	Nut-HF, NI
5	136-4733	1	Filter-Fuel
6	137-0067	4	O-Ring
7	137-0065	2	Adapter-Fuel
8	137-0066	2	Bolt-Joint
9	354-95	1	Fitting-Straight
10	68-6150	1	Breather
11	119-8153	1	Clamp-R, Double Tube
12	99-5005	1	Fitting-Tee, Barbed
13	136-6099	2	Hose-Fuel
14	114-8206	1	Hose-Fuel
15	132-1330	1	Hose-Fuel
16	138-4714	1	Hose-Fuel
17	92-2379	10	Clamp-Hose

Radiatior and Fan Assembly

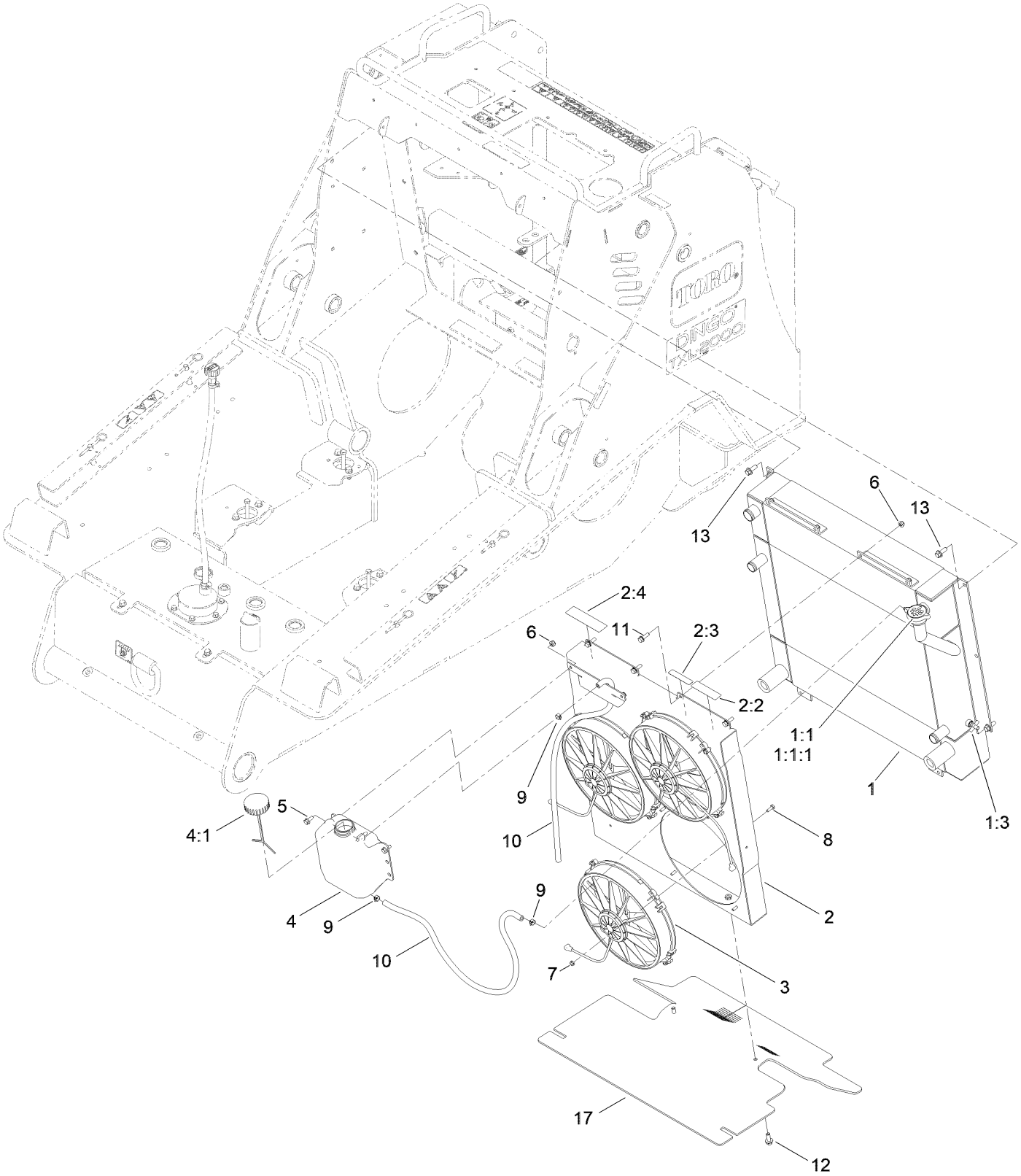

Radiatior and Fan Assembly (continued)

Ref.	Part Number	Qty.	Description
1	136-4705	1	Radiator/Cooler ASM
1:1	115-7766	1	Cap-Radiator
1:1:1	106-6755	1	Decal-Cap, Radiator
1:3	304-46	2	Draincock
2	138-4727	1	Cooler Shroud ASM
2:2	115-4865	1	Decal-Fill, Radiator
2:3	93-6681	1	Decal-Warning, Fan
2:4	93-7814	1	Decal-Danger
3	1-633831	3	Fan
4	144-6219	1	Reservoir-Coolant ASM
4:1	87-7050	1	Cap-Reservoir

Ref.	Part Number	Qty.	Description
5	3234-47	2	Screw-HHF
6	119-4041	8	Nut-HF
7	104-7201	12	Nut-HF, NI
8	321-4	12	Screw-HH
9	92-2379	3	Clamp-Hose
10	136-6096	2	Hose-Fuel
11	3234-29	6	Screw-HHF
12	3234-42	2	Screw-HHF
13	32144-109	4	Screw-Thd
17	139-5713	1	Baffle-Rubber

Radiator Hose Assembly

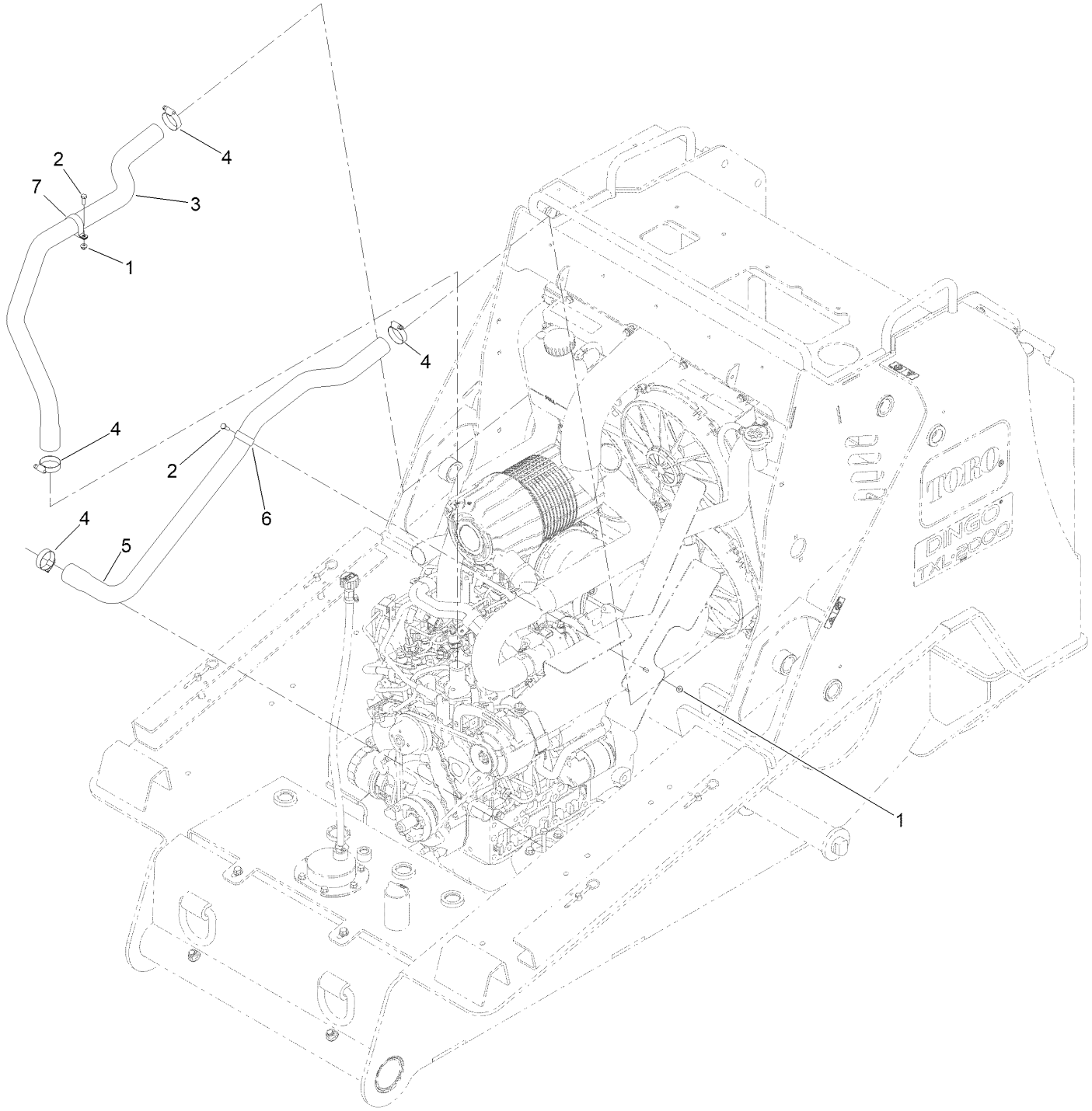

Radiator Hose Assembly (continued)

Ref.	Part Number	Qty.	Description
1	104-7201	1	Nut-HF, NI
2	3234-4	1	Screw-HHF
3	133-1691	1	Hose-Radiator, Upper
4	2412-3	4	Clamp-Hose
5	138-4744	1	Hose-Radiator, Lower
6	137-0147	1	Clamp-R
7	2412-147	1	Clamp-R

Lift Valve and Pump Assembly

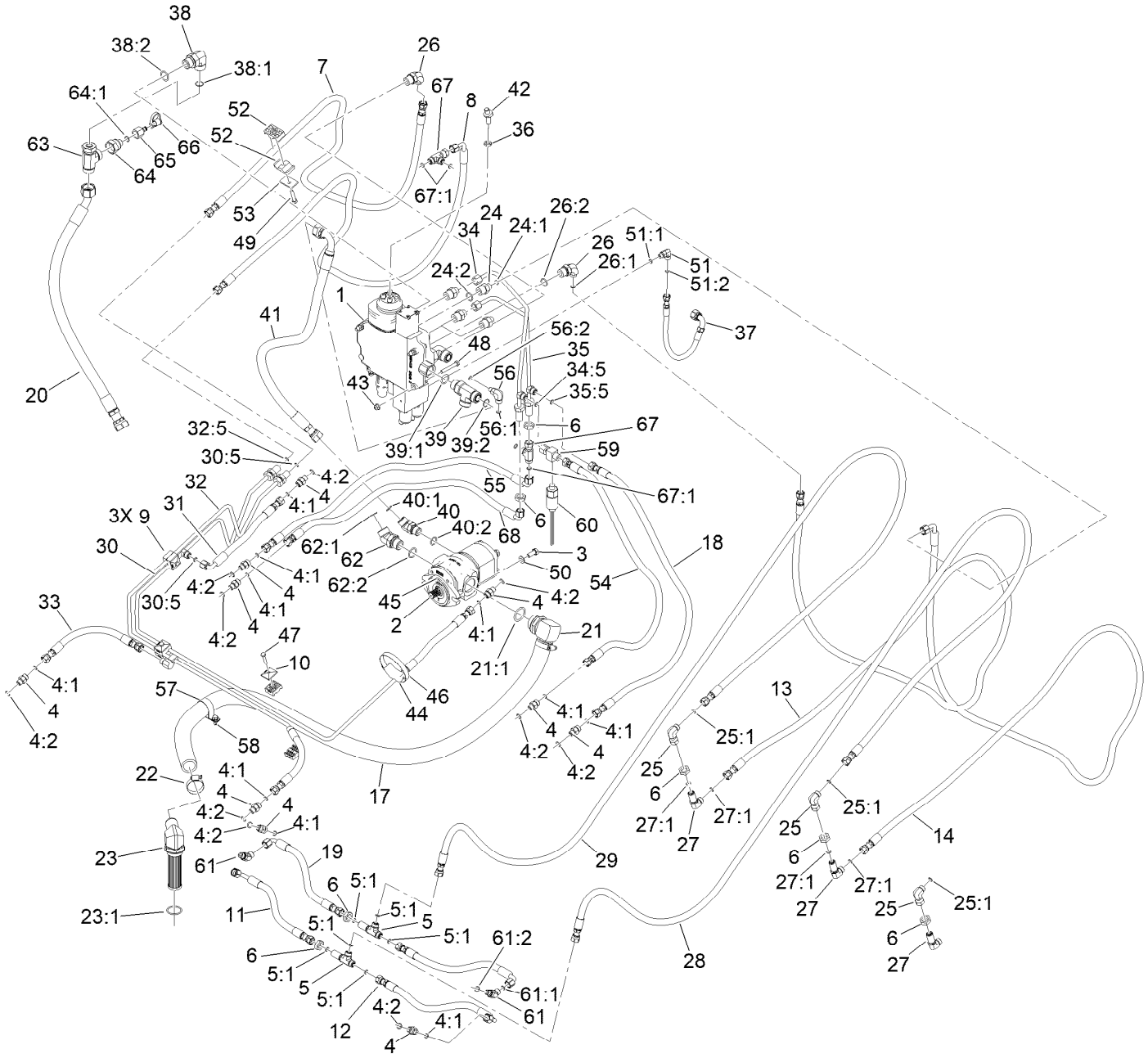

Lift Valve and Pump Assembly (continued)

Ref.	Part Number	Qty.	Description
1	161-9450	1	Valve-Loader, Spool Lock
2	133-0281	1	Gear Pump ASM
3	33115-025	2	Screw-HH
4	340-2	10	Fitting-Straight
4:1	237-22	1	O-Ring
4:2	237-42	1	O-Ring
5	340-68	2	Fitting-Tee, Bulkhead
5:1	237-22	3	O-Ring
6	340-70	9	Nut-Lock
7	133-9356	1	HYD Hose ASM
8	133-9357	1	HYD Hose ASM
9	137-5275	3	Clamp-Hose
10	127-8424	3	Plate-Clamp, Retainer
11	139-1150	1	HYD Hose ASM
12	139-1151	1	HYD Hose ASM
13	133-1629	1	HYD Hose ASM
14	133-1630	1	HYD Hose ASM
17	133-9377	1	Hose
18	133-9372	1	HYD Hose ASM
19	139-1152	2	HYD Hose ASM
20	139-1204	1	HYD Hose ASM
21	92-7526	1	Fitting-HYD 90 Spcl
21:1	237-101	1	O-Ring
22	164-1404	2	Clamp-Hose, Lined(1.13-1.56 DIA SS)
23	145-0622	1	Strainer Fitting ASM
23:1	237-101	1	O-Ring
24	340-141	4	Fitting-STR
24:1	237-22	1	O-Ring
24:2	237-80	1	O-Ring
25	340-159	3	Elbow-90
25:1	237-22	2	O-Ring
26	340-130	2	Fitting-Elbow 90
26:1	237-22	1	O-Ring
26:2	237-80	1	O-Ring
27	340-154	3	Union-Bulkhead
27:1	237-22	2	O-Ring
28	133-9412	1	HYD Hose ASM
29	133-9413	1	HYD Hose ASM
30	137-0143	1	HYD Tube ASM
30:5	237-22	2	O-Ring
31	133-1619	1	HYD Hose ASM
32	137-0142	1	HYD Tube ASM
32:5	237-22	2	O-Ring
33	133-1617	1	HYD Hose ASM
34	136-6080	1	HYD Tube ASM
34:5	237-22	2	O-Ring
35	136-6081	1	HYD Tube ASM
35:5	237-22	2	O-Ring
36	51-2070	1	Nut
37	137-0117	1	HYD Hose ASM
38	340-142	2	Fitting-Elbow, 90 DEG
38:1	237-58	1	O-Ring
38:2	237-81	1	O-Ring
39	340-148	1	Fitting-Tee
39:1	237-81	1	O-Ring
39:2	237-58	2	O-Ring
40	340-14	1	Fitting-HYD, 45 DEG
40:1	237-65	1	O-Ring
40:2	237-80	1	O-Ring
41	138-0233	1	HYD Hose ASM
42	138-2343	1	Shaft-Control
43	119-4041	3	Nut-HF
44	137-0146	1	Block-Hardline
45	237-161	1	O-Ring
46	2412-110	1	Clamp-Band/Screw
47	321-13	3	Screw-HH
48	322-11	3	Screw-HH
49	322-8	1	Screw-HH
50	33095-00	2	Washer-Flat
51	340-132	1	Fitting-Elbow, 90 DEG
51:1	237-78	1	O-Ring
51:2	237-21	1	O-Ring
52	56-7971	2	Clamp-Tube
53	69-9760	1	Plate-Cover
54	140-6003	1	HYD Hose ASM
55	138-4701	1	HYD Hose ASM
56	340-97	1	Fitting-Elbow, 90 DEG
56:1	237-22	1	O-Ring
56:2	237-78	1	O-Ring
57	2412-147	1	Clamp-R
58	32104-32	1	Screw-HWH
59	95-5658	1	Fitting-HYD, Special
59:1	237-22	1	O-Ring ●
60	139-4848	1	Switch-Pressure,
61	340-87	2	Fitting-Elbow, 45 DEG
61:1	237-22	1	O-Ring
61:2	237-42	1	O-Ring
62	100-5530	1	Fitting-45 DEG
62:1	237-58	1	O-Ring
62:2	237-81	1	O-Ring
63	ST50975	1	Fitting-HYD
64	95-3513	1	Fitting-Straight
64:1	237-30	1	O-Ring
65	100-5616	1	Fitting
66	354-79	1	Cap-Dust
67	340-115	2	Fitting-Tee
67:1	237-22	2	O-Ring
68	140-6004	1	HYD Hose ASM

● Not illustrated

Spool Lock Loader Valve Assembly No. 161-9450

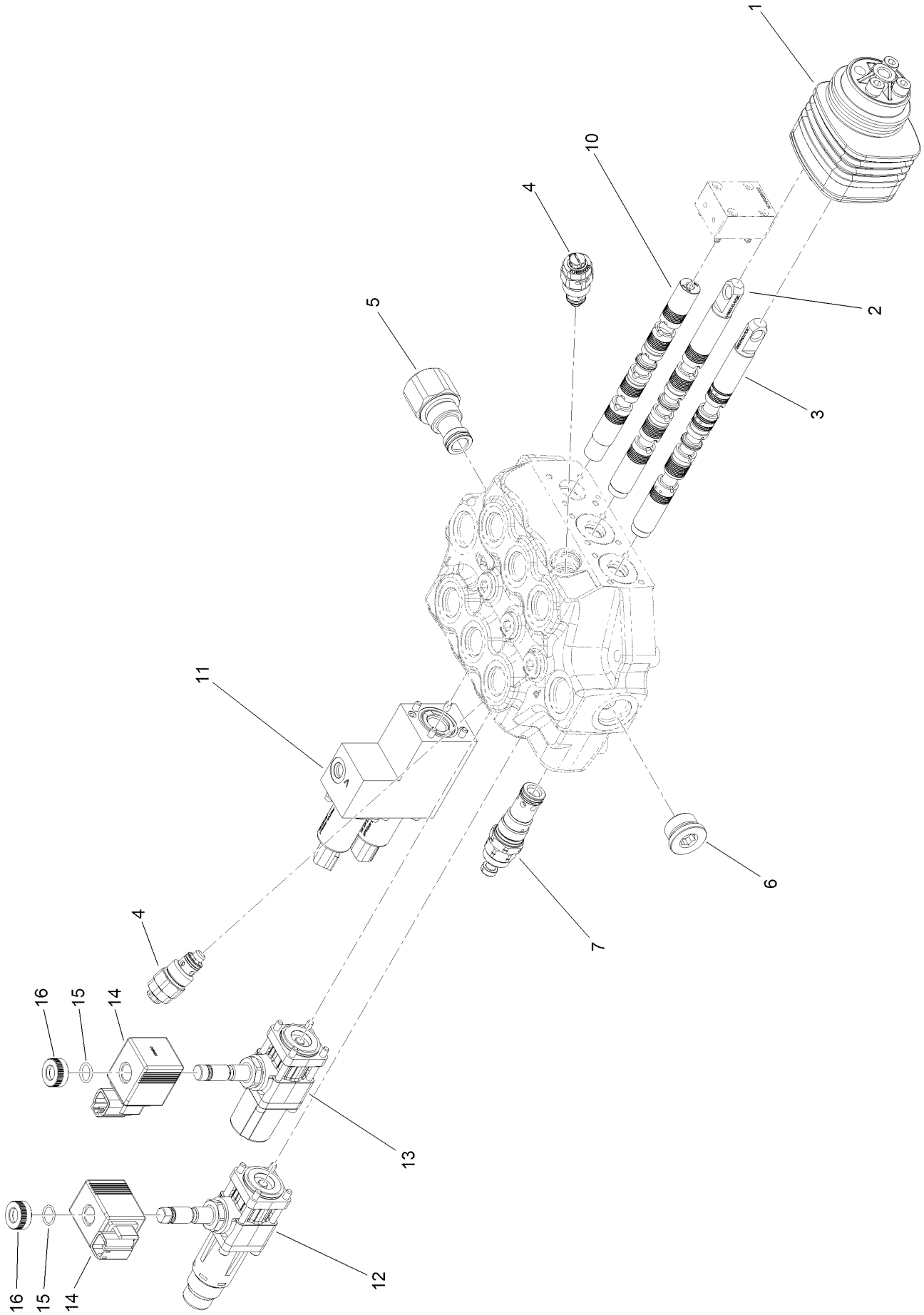

Spool Lock Loader Valve Assembly No. 161-9450 (continued)

Ref.	Part Number	Qty.	Description
1	139-1219	1	Cover Kit
2	139-1221	1	Valve-Spool
3	139-1222	1	Valve-Spool
4	139-1223	2	Cartridge-Relief
5	139-1224	1	Joint-SAE12
6	139-1225	1	Plug-SAE12
7	139-1226	1	Valve Kit

Ref.	Part Number	Qty.	Description
10	139-1229	1	Valve-Spool
11	139-1230	1	Command Kit
12	163-8703	1	Spool Lock ASM
13	163-8704	1	Spool Lock ASM
14	163-8705	2	Solenoid, 12V
15	163-8706	2	O-Ring
16	163-8707	2	Nut

Gear Pump Assembly No. 133-0281

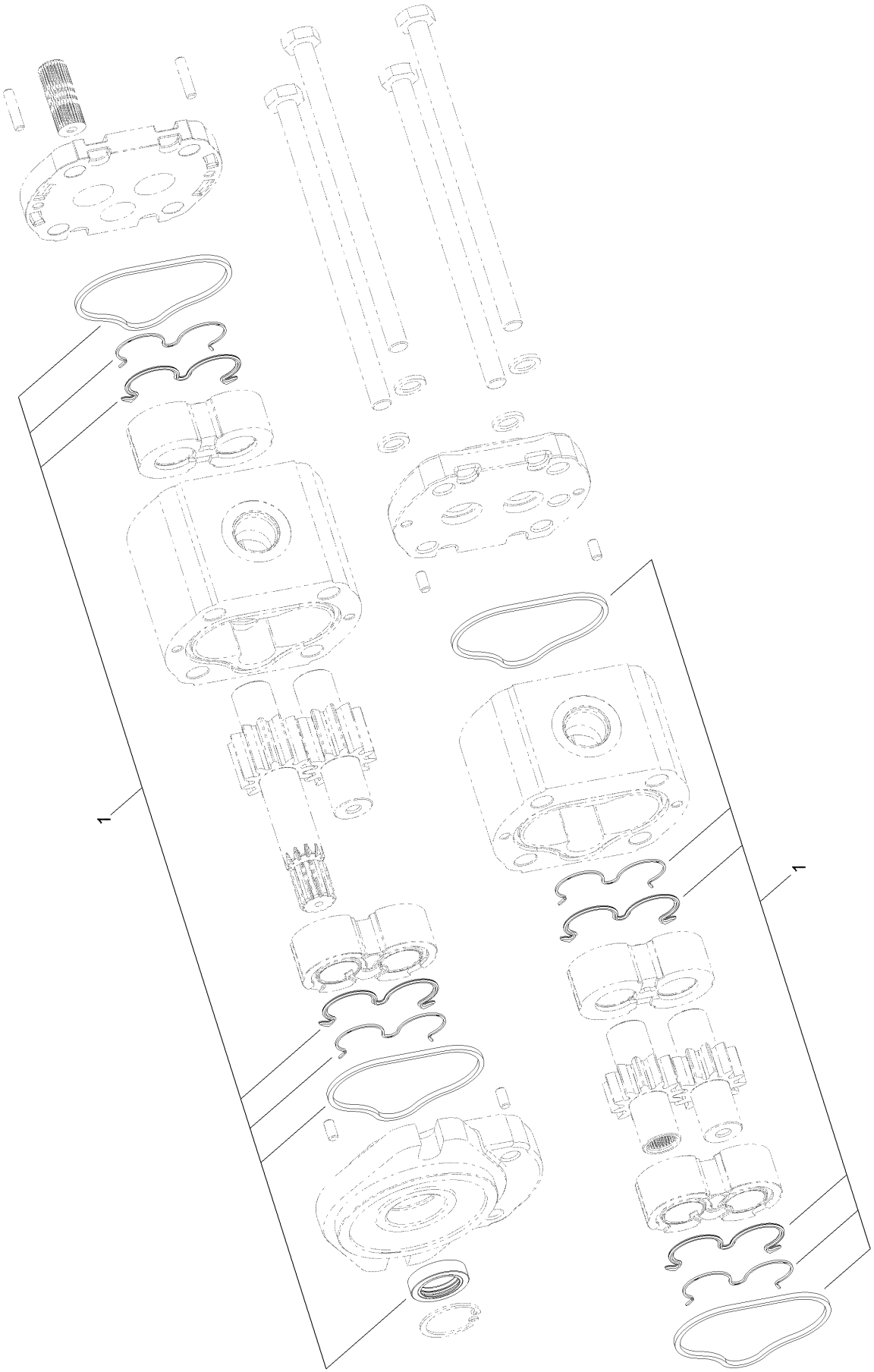

Gear Pump Assembly No. 133-0281 (continued)

Ref.	*Part Number*	*Qty.*	*Description*
1	139-1211	1	Seal Kit

Auxiliary Hydraulic Assembly

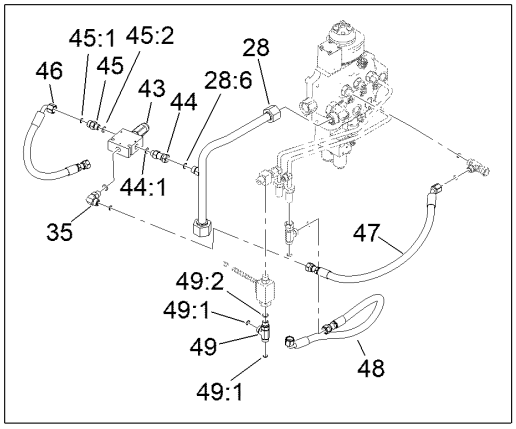

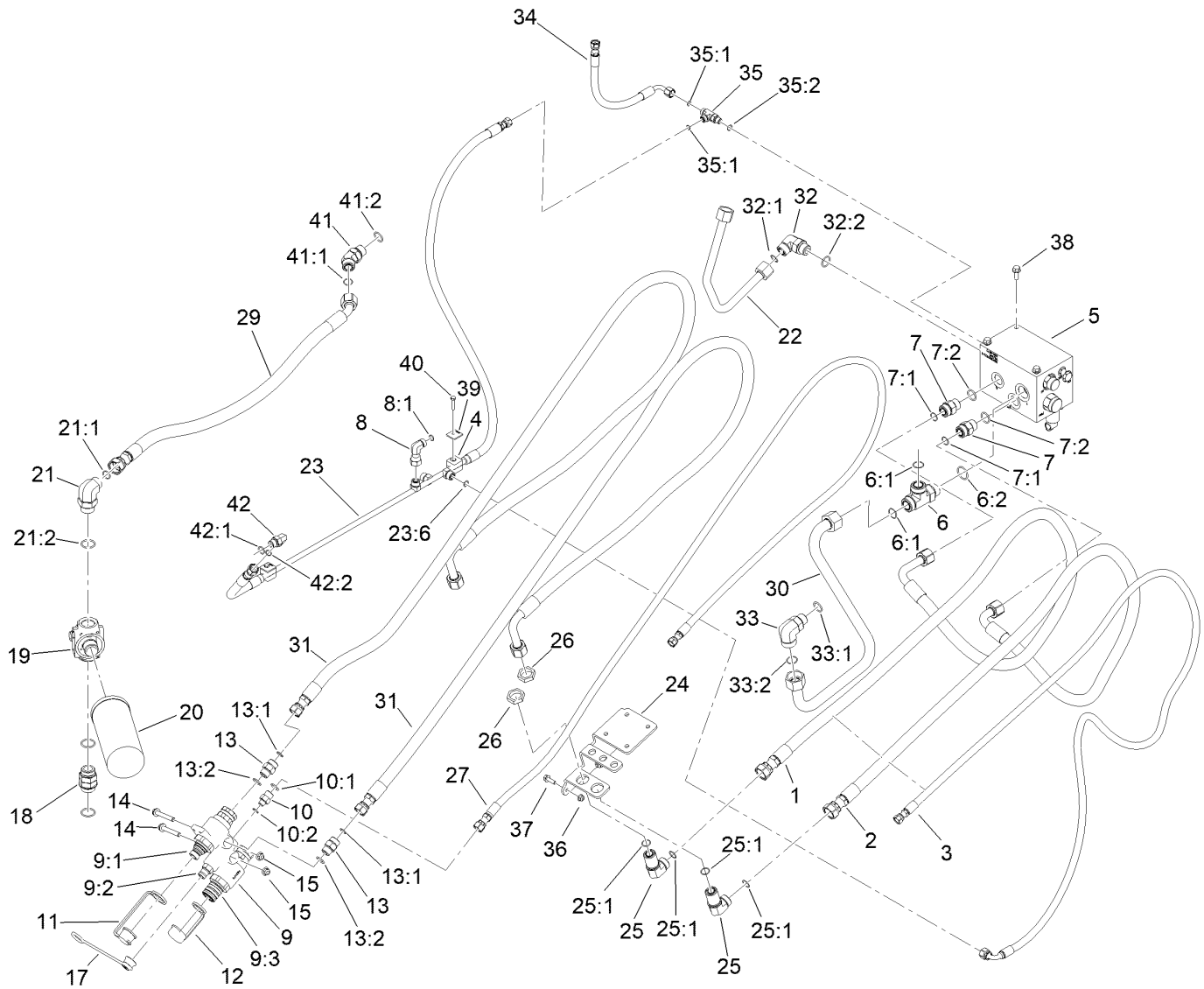

Auxiliary Hydraulic Assembly (continued)

Ref.	Part Number	Qty.	Description
1	133-1631	1	HYD Hose ASM
2	133-1632	1	HYD Hose ASM
3	133-9354	1	HYD Hose ASM
4	138-4696	2	Clamp-Tube
5	136-4872	1	Aux Manifold ASM
6	104-3795	1	Fitting-Tee
6:1	340-65	2	O-Ring
6:2	237-146	1	O-Ring
7	340-9	2	Fitting-STR
7:1	237-58	1	O-Ring
7:2	237-81	1	O-Ring
8	94-6031	1	Elbow-90
8:1	237-30	1	O-Ring
9	150-2410	1	Manifold-Qdc
9:1	150-3702	1	Kit-Male Coupler, 1/2"
9:2	150-3703	1	Kit-Male Coupler, 3/8"
9:3	150-3704	1	Kit-Female Coupler, 1/2"
10	340-5	1	Fitting-Straight
10:1	237-42	1	O-Ring
10:2	237-30	1	O-Ring
11	100-8815	1	Cap-Dust, Nipple
12	100-8816	1	Cap-Dust, Coupler
13	340-7	2	Fitting-Straight
13:1	237-65	1	O-Ring
13:2	237-80	1	O-Ring
14	133-9682	2	Screw-Hfh
15	119-4042	2	Nut-HF, NI
17	131-6069	1	Cap-Dust, Nipple
18	133-9400	1	Fitting-Straight
19	121-1577	1	Head-Filter
20	94-2621	1	Element-Filter
21	340-15	1	Fitting-Elbow 90
21:1	237-58	1	O-Ring
21:2	237-146	1	O-Ring
22	137-0124	1	HYD Tube ASM
23	137-0125	1	HYD Tube ASM
23:6	237-30	3	O-Ring
24	133-9408-03	1	Mount-Carrier
25	133-9407	2	Fitting-Elbow 90
25:1	237-58	2	O-Ring
26	340-126	2	Nut-Bulkhead
27	145-4387	1	HYD Hose ASM
28	137-0123	1	HYD Tube ASM
28:6	237-22	1	O-Ring
29	133-9391	1	HYD Hose ASM
30	136-6079	1	Hydraulic Tube ASM
31	145-4386	2	HYD Hose ASM
32	340-142	1	Fitting-Elbow, 90 DEG
32:1	237-58	1	O-Ring
32:2	237-81	1	O-Ring
33	104-3796	1	Fitting-Elbow 90
33:1	237-81	1	O-Ring
33:2	340-65	1	O-Ring
34	138-0169	1	HYD Hose ASM
35	340-77	1	Fitting-Elbow, 90 DEG
35	340-86	1	Fitting-Tee
35:1	237-22	1	O-Ring
35:1	237-22	2	O-Ring
35:2	237-42	1	O-Ring
35:2	237-42	1	O-Ring
36	119-4041	3	Nut-HF
37	3234-29	3	Screw-HHF
38	3234-11	3	Screw-HHF
39	137-0128	2	Plate-Clamp,Tube
40	321-8	2	Screw-HH
41	100-5530	1	Fitting-45 DEG
41:1	237-58	1	O-Ring
41:2	237-81	1	O-Ring
42	340-98	1	Fitting-Elbow, 90 DEG
42:1	237-79	1	O-Ring
42:2	237-30	1	O-Ring
43	139-4856	1	Valve-Sequence
44	104-3779	1	Connector-Swivel, Straight
44:1	237-42	1	O-Ring
45	114-7783	1	Fitting-Straight
45:1	237-22	1	O-Ring
45:2	237-42	1	O-Ring
46	104-2240	1	Hose ASM
47	98-7416	1	Hose-HYD
48	120-6572	1	Hose-HYD
49	340-86	1	Fitting-Tee
49:1	237-22	2	O-Ring
49:2	237-42	1	O-Ring

Auxiliary Manifold Assembly No. 136-4872

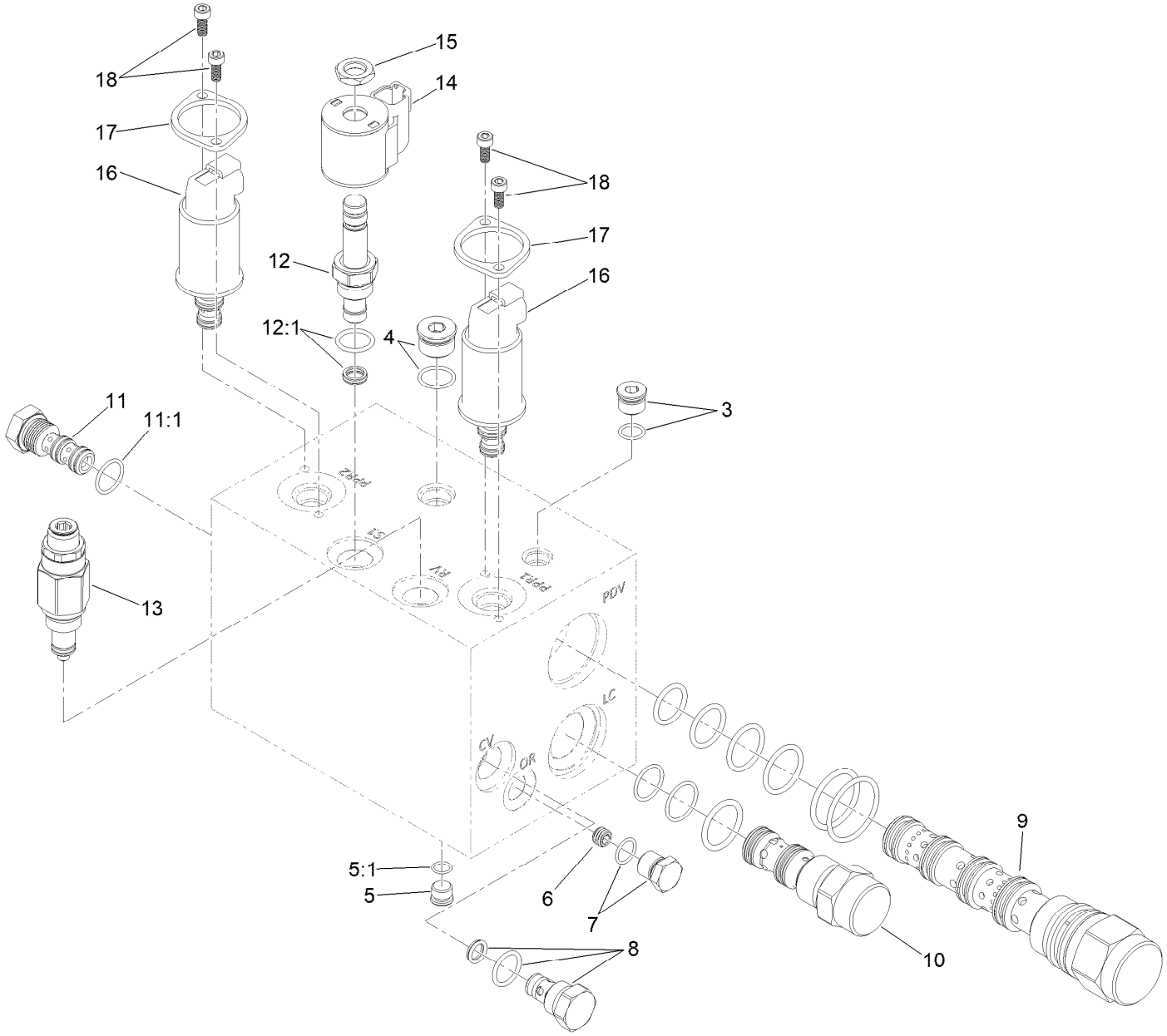

Auxiliary Manifold Assembly No. 136-4872 (continued)

Ref.	Part Number	Qty.	Description
3	112-9213	1	Plug
4	106-1027	1	Plug
5	353-990	1	Plug ASM
5:1	237-78	1	O-Ring
6	139-4832	1	Orifice-.035
7	353-509	1	Plug
8	139-4833	1	Valve-Check,
9	139-1214	1	Valve-Proportional, Directional
10	139-4834	1	Cartridge-Logic,
11	131-6506	1	Shuttle-Load
11:1	110-8773	1	Seal Kit
12	120-6562	1	Valve-Solenoid
12:1	105-9156	1	Seal Kit
13	147-2453	1	Valve-Relief
14	112-0197	1	E Coil-12V DC
15	110-2634	1	Nut-Coil
16	139-1218	2	Valve-Prop Press Reducing/Relieving
17	138-3825	2	Plate-Mounting, Standard
18	138-3827	4	Screw

Tandem Pump Assembly

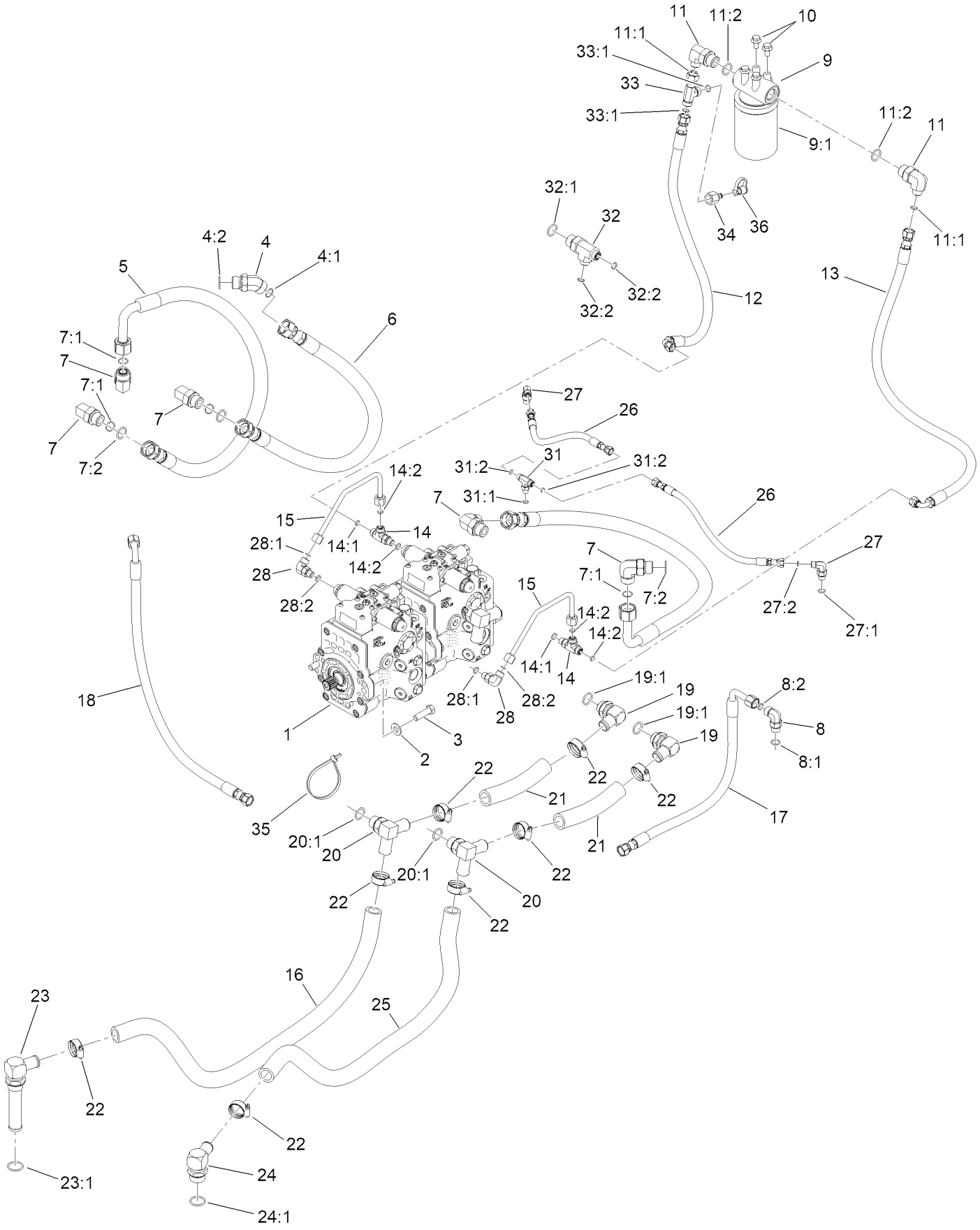

Tandem Pump Assembly (continued)

Ref.	Part Number	Qty.	Description
1	164-3578	1	HYD Pump ASM
2	87-7270	2	Washer-Thrust
3	164-3569	2	Screw-HH
4	100-5530	2	Fitting-45 DEG
4:1	237-58	1	O-Ring
4:2	237-81	1	O-Ring
5	133-9374	2	HYD Hose ASM
6	133-9373	2	HYD Hose ASM
7	340-142	6	Fitting-Elbow, 90 DEG
7:1	237-58	1	O-Ring
7:2	237-81	1	O-Ring
8	340-98	2	Fitting-Elbow, 90 DEG
8:1	237-79	1	O-Ring
8:2	237-30	1	O-Ring
9	93-2242	1	Oil Filter ASM
9:1	75-1310	1	Filter-HYD
10	33105-020	4	Screw-HHF
11	340-131	1	Fitting-HYD, 90 DEG
11:1	237-30	1	O-Ring
11:2	237-81	1	O-Ring
12	139-1184	1	HYD Hose ASM
13	133-9385	1	HYD Hose ASM
14	340-86	2	Fitting-Tee
14:1	237-22	2	O-Ring
14:2	237-42	1	O-Ring
15	133-9389	2	HYD Tube ASM
16	133-9392	1	Hose
17	133-9379	1	HYD Hose ASM
18	133-9381	1	HYD Hose ASM
19	100-4202	2	Fitting-90

Ref.	Part Number	Qty.	Description
19:1	237-81	1	O-Ring
20	AU375462A1	2	Connector
20:1	237-81	1	O-Ring
21	137-0078	2	Hose
22	164-1404	8	Clamp-Hose, Lined(1.13-1.56 DIA SS)
23	105-0204	1	Strainer Fitting ASM
23:1	237-146	1	O-Ring
24	23-8910	1	Stem-Barb-90
24:1	237-146	1	O-Ring
25	133-9399	1	Hose
26	139-5722	2	HYD Hose ASM
27	340-82	2	Fitting-Elbow, 90 DEG
27:1	237-42	1	O-Ring
27:2	237-21	1	O-Ring
28	340-77	2	Fitting-Elbow, 90 DEG
28:1	237-22	1	O-Ring
28:2	237-42	1	O-Ring
31	340-125	1	Fitting-Tee
31:1	237-21	2	O-Ring
31:2	237-78	1	O-Ring
32	117-0676	1	Fitting-Tee
32:1	237-30	2	O-Ring
32:2	237-81	1	O-Ring
33	340-104	1	Fitting-Tee
33:1	237-30	2	O-Ring
34	100-5616	1	Fitting
35	3334-945	1	Tie-Cable
36	354-79	1	Cap-Dust

Control Console Assembly

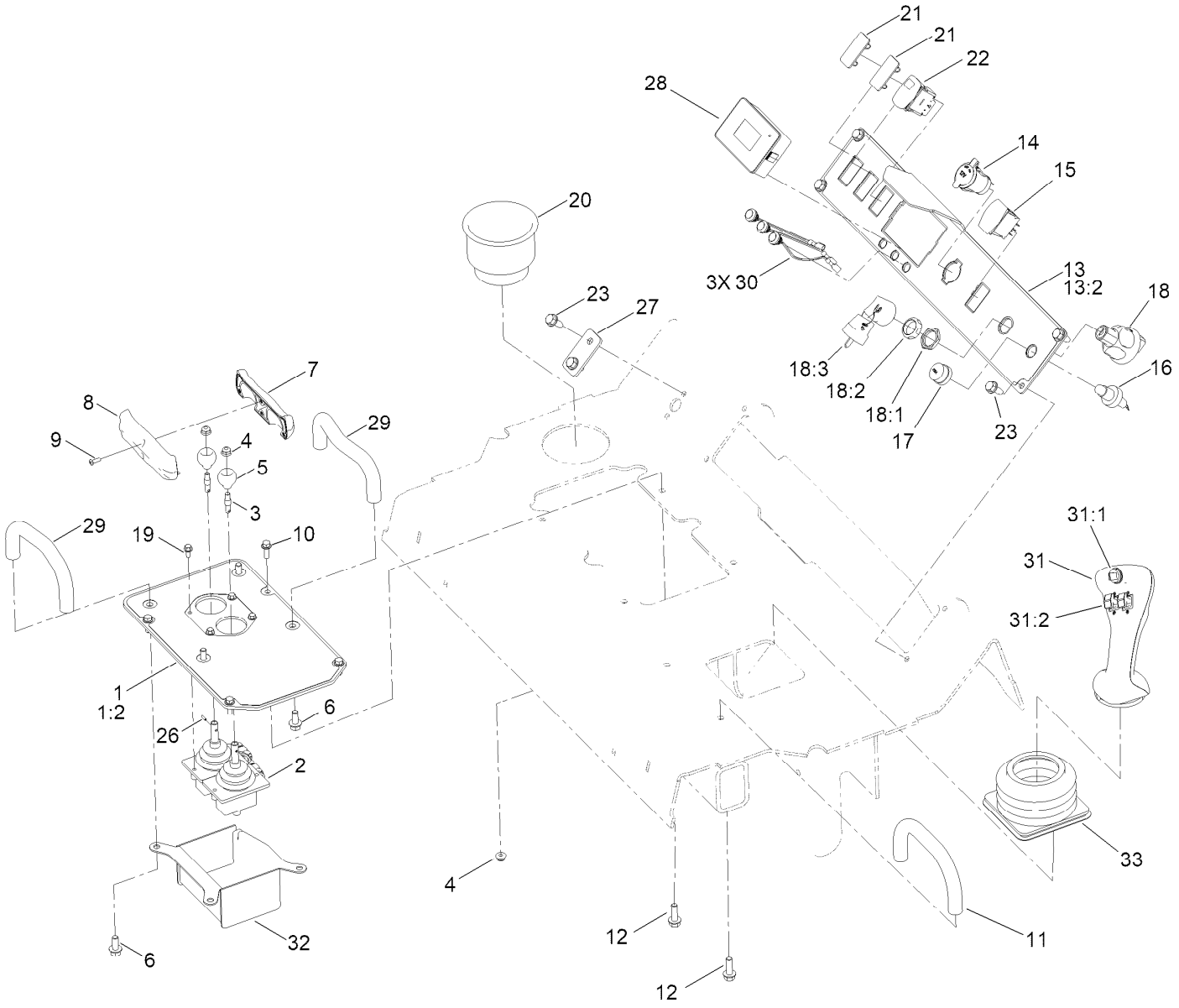

Control Console Assembly (continued)

Ref.	Part Number	Qty.	Description
1	138-4729	1	Plate-Controls, Traction
1:2	137-5420	1	Decal-Traction
2	136-4784	2	Lever-Control
3	137-0431	2	Shaft-Handle
4	104-7201	6	Nut-HF, NI
5	130-7723	2	Ball-Traction
6	3234-5	4	Screw-HHF
7	139-1166	1	Handle-Front
8	139-1167	1	Handle-Rear
9	94-6961	4	Screw
10	115-5103	4	Screw-HHF
11	112-2620	1	Bar-Reference
12	3234-17	2	Screw-HHF
13	139-5745	1	Plate-Controls, Main
13:2	161-9443	1	Decal-Console
14	126-6499	1	Port-Power, 12V
15	100-1535	1	Switch-Rocker, (On)-Off-(On)
16	112-3324	1	Switch-Horn
17	112-3313	1	Nut-Weatherproof
18	161-4693	1	Switch-Ignition
18:1	121-5160	1	Nut-Hex
18:2	122-2704	1	Nut-Face, M22 (Plastic)
18:3	121-5162	1	Set-Key, Ignition
19	120-4579	4	Screw-HHF
20	AU8EO24121	1	Cup-Holder
21	99-7420	2	Plug-Hole
22	122-3953	1	Switch-Rocker, (On)-Off-(On)
23	32104-32	6	Screw-HWH
26	137-0432	2	Pin-Roll
27	137-0439-01	1	Plate-Blank
28	122-1201	1	Module-Display
29	138-4693	2	Bar-Reference
30	136-9678	3	Cable Assy-Pushbutton
31	139-4853	1	Handle-Joystick,
31:1	163-4296	1	Switch-Rocker
31:2	163-4297	2	Switch-Slider
32	138-2294-03	1	Cover-Valve [black]
33	140-1662	1	Boot

Loader Arm Assembly

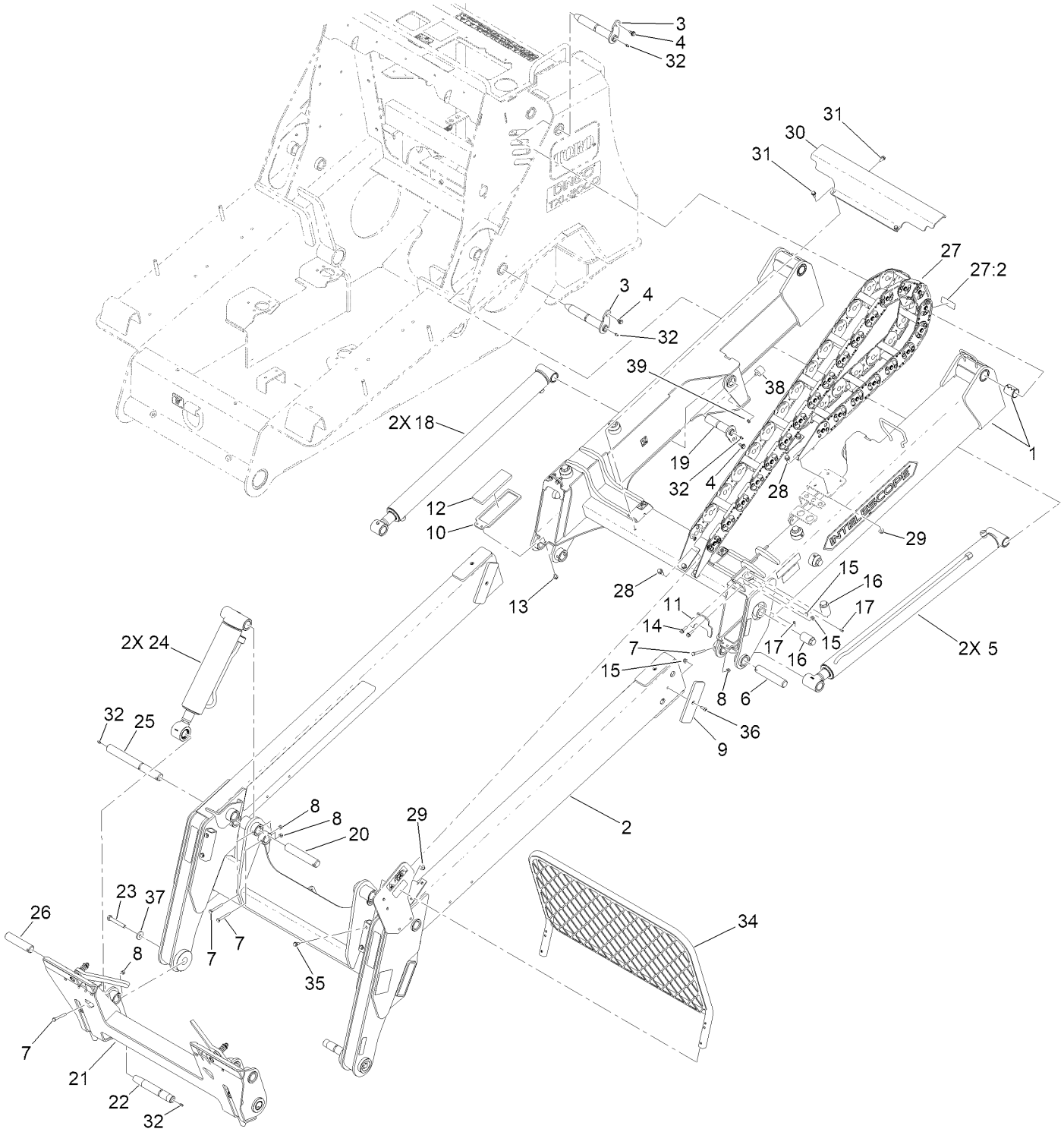

Loader Arm Assembly (continued)

Ref.	Part Number	Qty.	Description
1	138-4730	1	Upper Loader Arm ASM
2	138-4731	1	Lower Loader Arm ASM
3	137-0132	4	Pivot Pin ASM
4	99-5105	6	Screw-Shoulder
5	139-5718	2	CYL-HYD
6	139-7121	2	Pin-Link
7	322-12	8	Screw-HH
8	3296-29	8	Nut-Lock, NI
9	137-5443	8	Strip-Slide, Snap
10	137-0096-03	2	Retainer-Pad
11	132-1681-03	2	Retainer-Wear,Pad,Left
12	132-8480	2	Strip-Slide,Lower
13	32144-14	4	Screw-HWHTF
14	3234-29	4	Screw-HHF
15	119-4041	12	Nut-HF
16	132-8479	8	Screw-Slide, Adjustment
17	126-3824	8	Screw-Set, SQH
18	139-5719	2	CYL-HYD
19	137-0134	2	Flag Pin ASM
20	132-8429	2	Pin-Link
21	132-8468	1	Qtach ASM
22	139-5731	2	Pin-Link, Taper
23	112-7264	2	Screw-HH
24	161-6930	2	CYL-HYD
25	132-8445	2	Pin-Link
26	139-5739	2	Pin-Link
27	138-4733	1	Carrier-Hose
27:2	120-0625	1	Decal-Warning
28	3234-11	8	Screw-HHF
29	119-4042	8	Nut-HF, NI
30	137-0137-03	1	Plate-Guard
31	32104-32	4	Screw-HWH
32	302-5	10	Fitting-Grease
34	139-1195-03	1	Screen-Debris
35	3234-5	4	Screw-HHF
36	3274-32	8	Screw-HSBH
37	110-6147	2	Washer-Flat
38	137-4803	2	Bumper-Rubber
39	3296-47	2	Nut-Lock,NI

Upper Loader Arm Assembly No. 138-4730

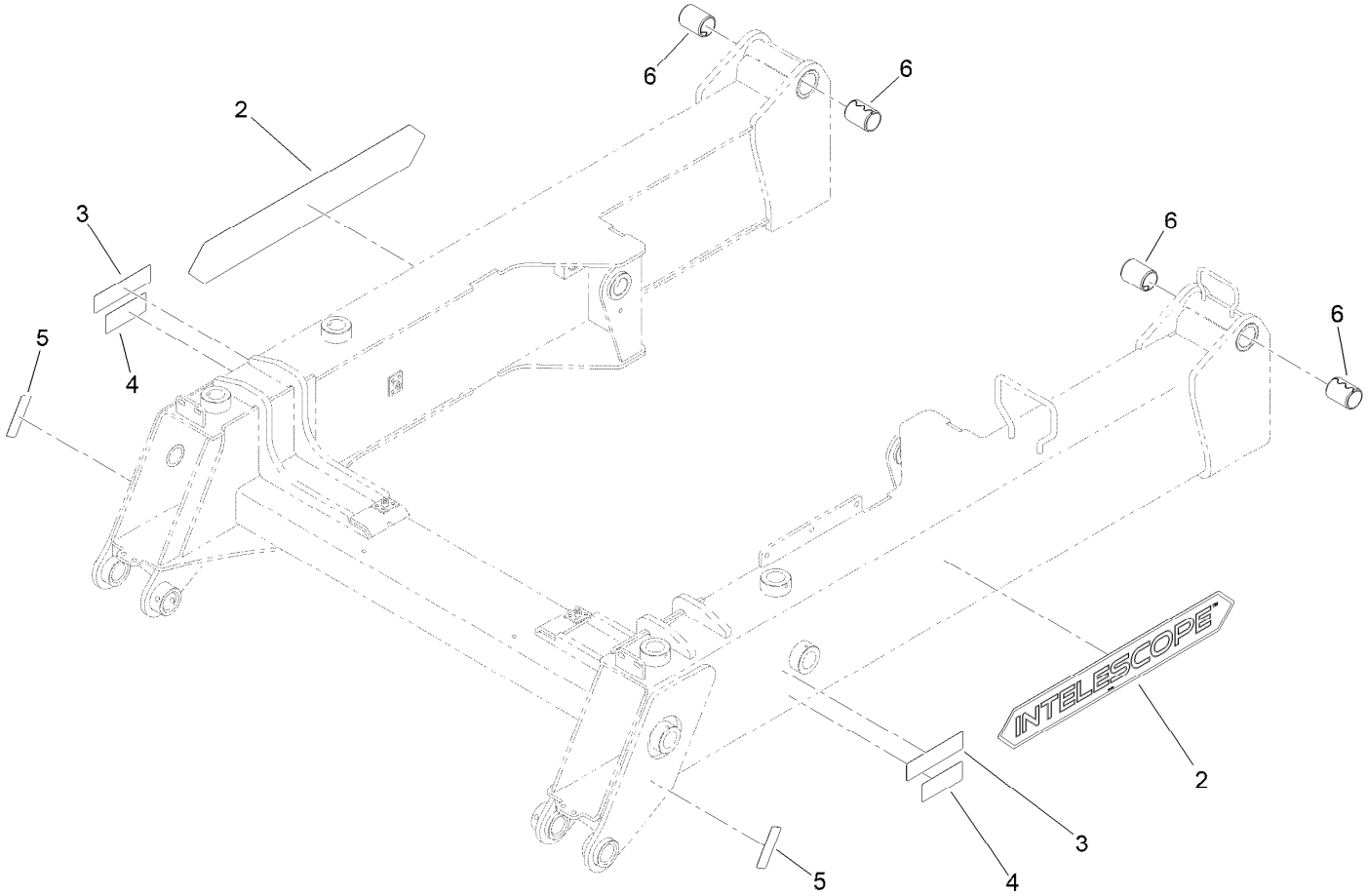

Upper Loader Arm Assembly No. 138-4730 (continued)

Ref.	Part Number	Qty.	Description
2	164-1433	2	Decal-Intelescope, Red
3	139-1158	2	Decal-Warning
4	139-1159	2	Decal-Warning
5	120-0625	2	Decal-Warning
6	137-0126	4	Bushing-Spring

Lower Loader Arm Assembly No. 138-4731

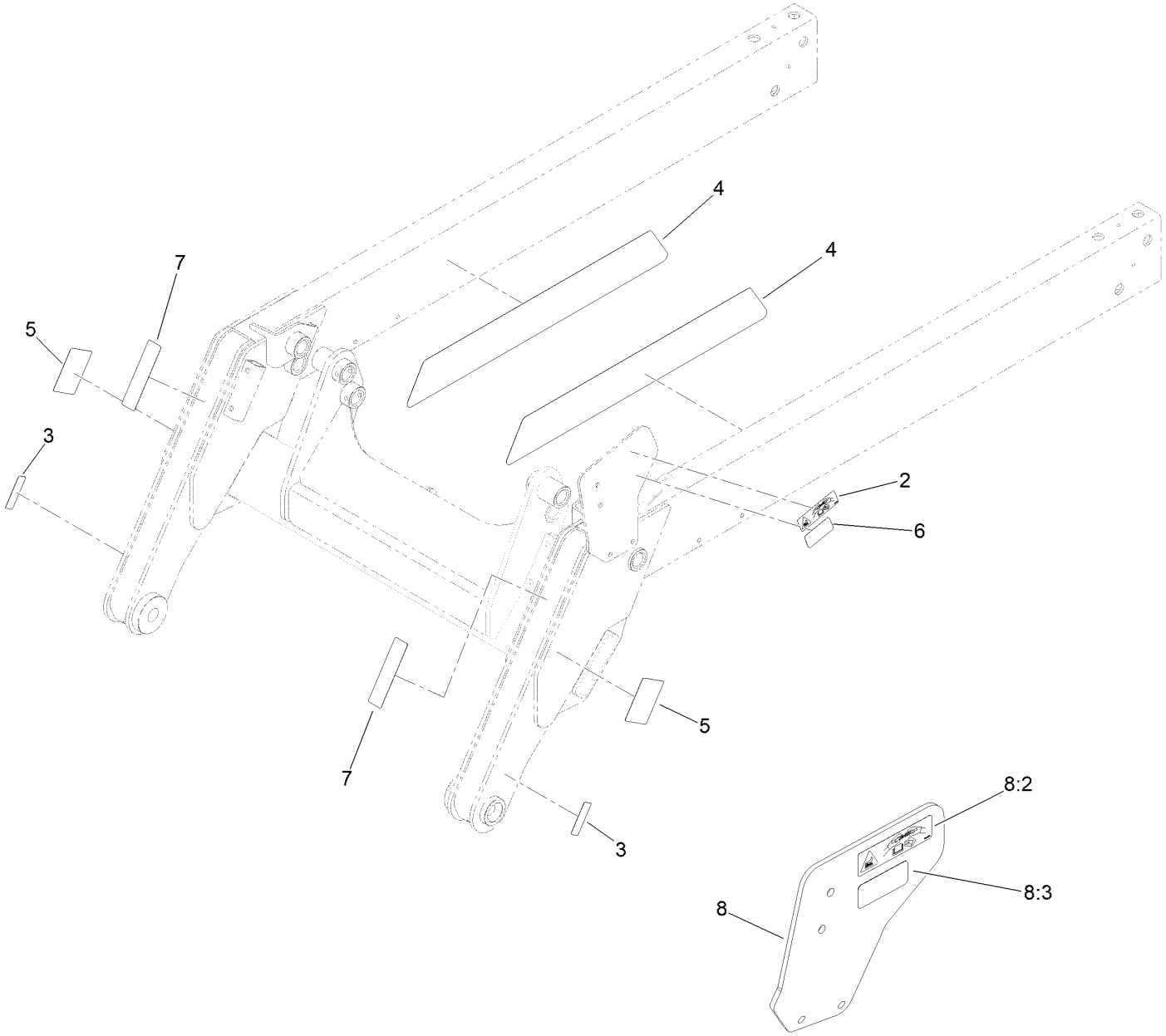

USE 161-7172 FOR MODEL YEAR 2021 AND UP (S/N 406500000 AND UP)

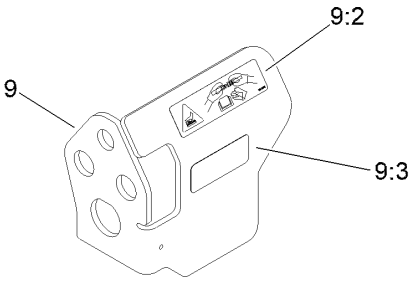

USE 161-7173 FOR MODEL YEAR 2017-2020 (S/N 400000000 THRU 406499999)

Lower Loader Arm Assembly No. 138-4731 (continued)

Ref.	Part Number	Qty.	Description
2	115-4855	1	Decal-Caution
3	120-0625	2	Decal-Warning
4	137-5409	2	Decal-Extension
5	139-1164	2	Decal-Warning
6	139-1173	1	Decal-Warning
7	131-9290	2	Tape-Reflective

Ref.	Part Number	Qty.	Description
8	161-7172	1	Plate-Mount Qc
8:2	115-4855	1	Decal-Caution
8:3	139-1173	1	Decal-Warning
9	161-7173	1	Mount-Plate Qd
9:2	115-4855	1	Decal-Caution
9:3	139-1173	1	Decal-Warning

Hydraulic Cylinder Assembly No. 139-5718

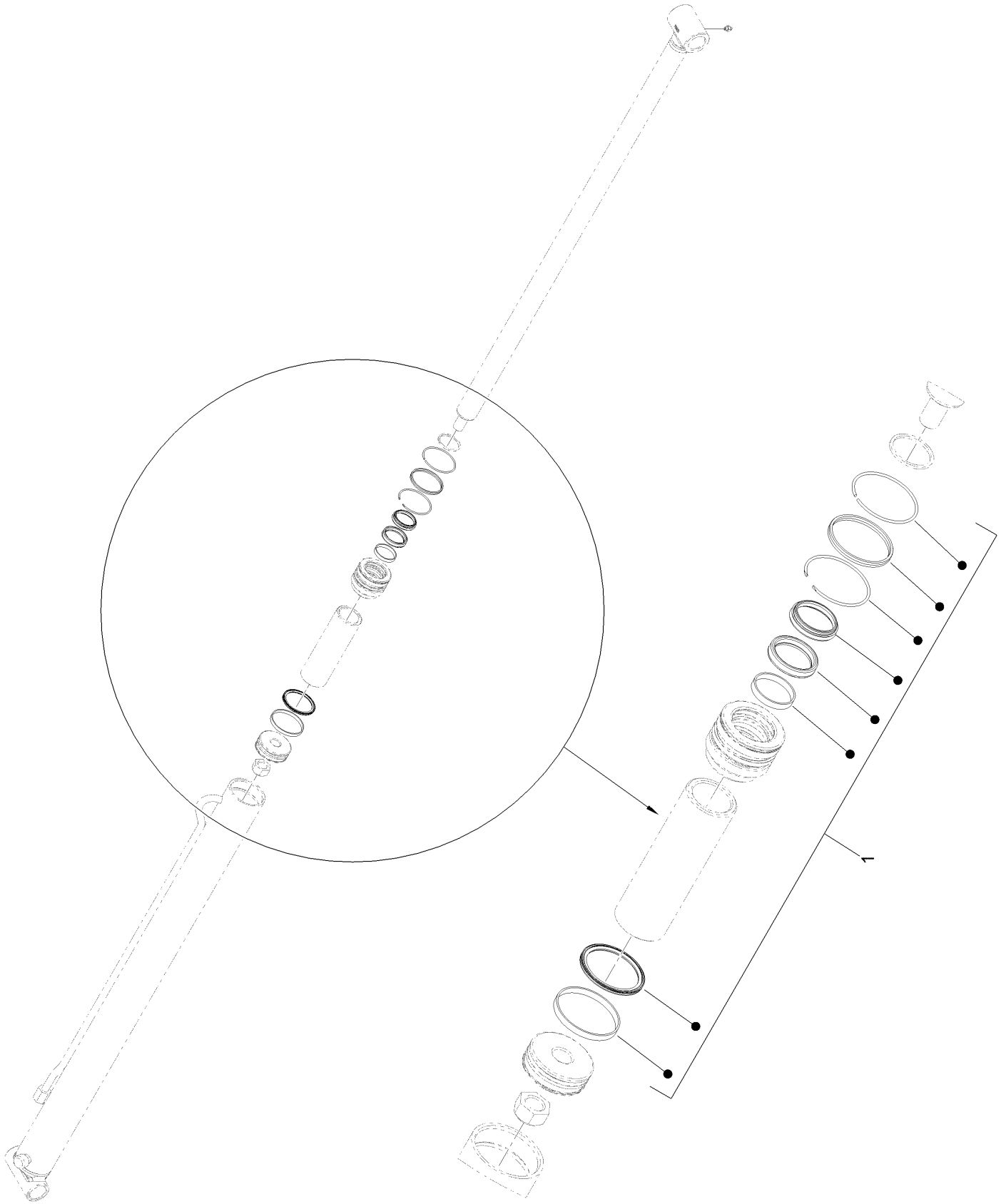

Hydraulic Cylinder Assembly No. 139-5718 (continued)

Ref.	Part Number	Qty.	Description
1	163-8749	1	Hydraulic Cylinder Seal Kit

Hydraulic Cylinder Assembly No. 139-5719

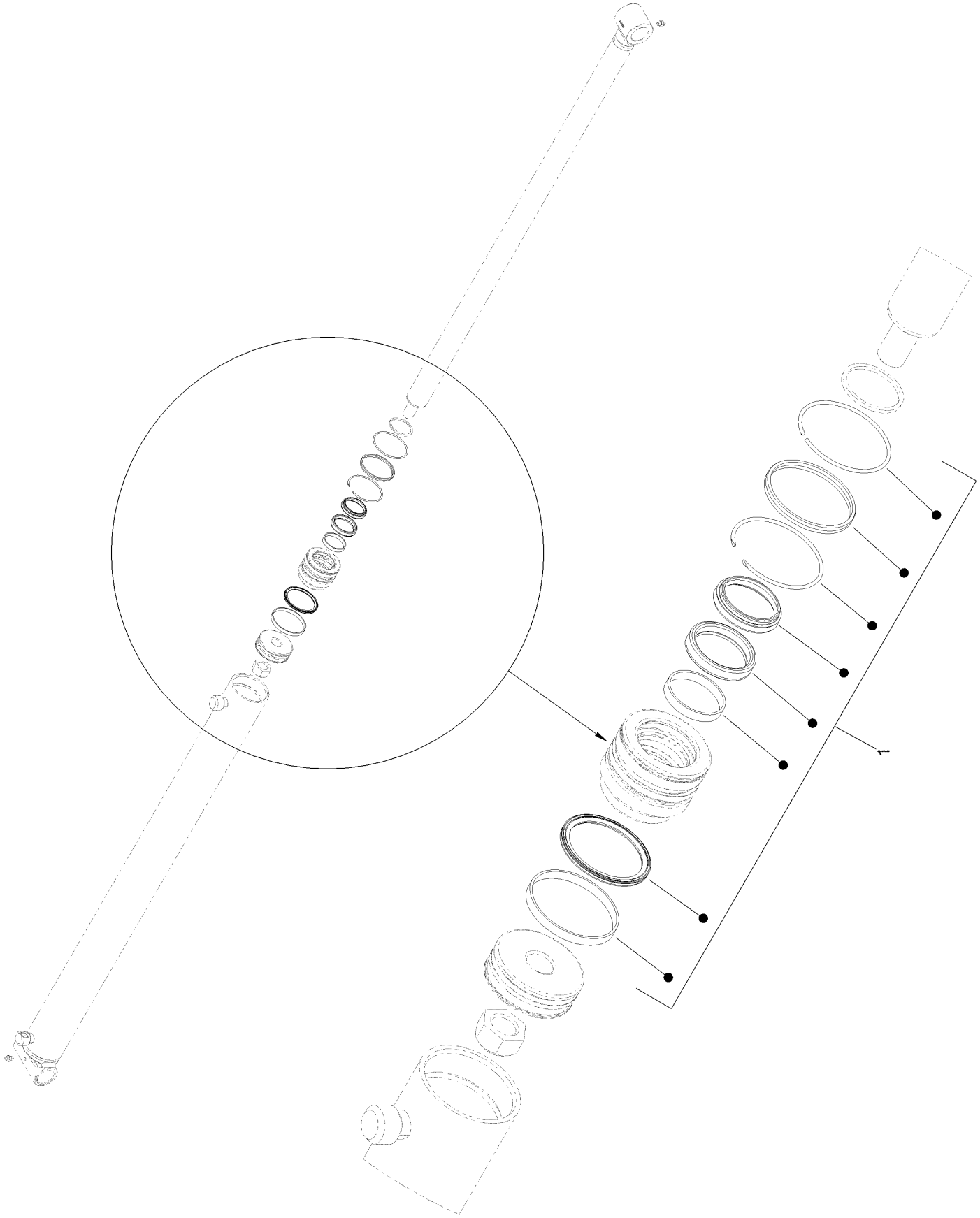

Hydraulic Cylinder Assembly No. 139-5719 (continued)

Ref.	Part Number	Qty.	Description
1	163-8749	1	Hydraulic Cylinder Seal Kit

Qtach Assembly No. 132-8468

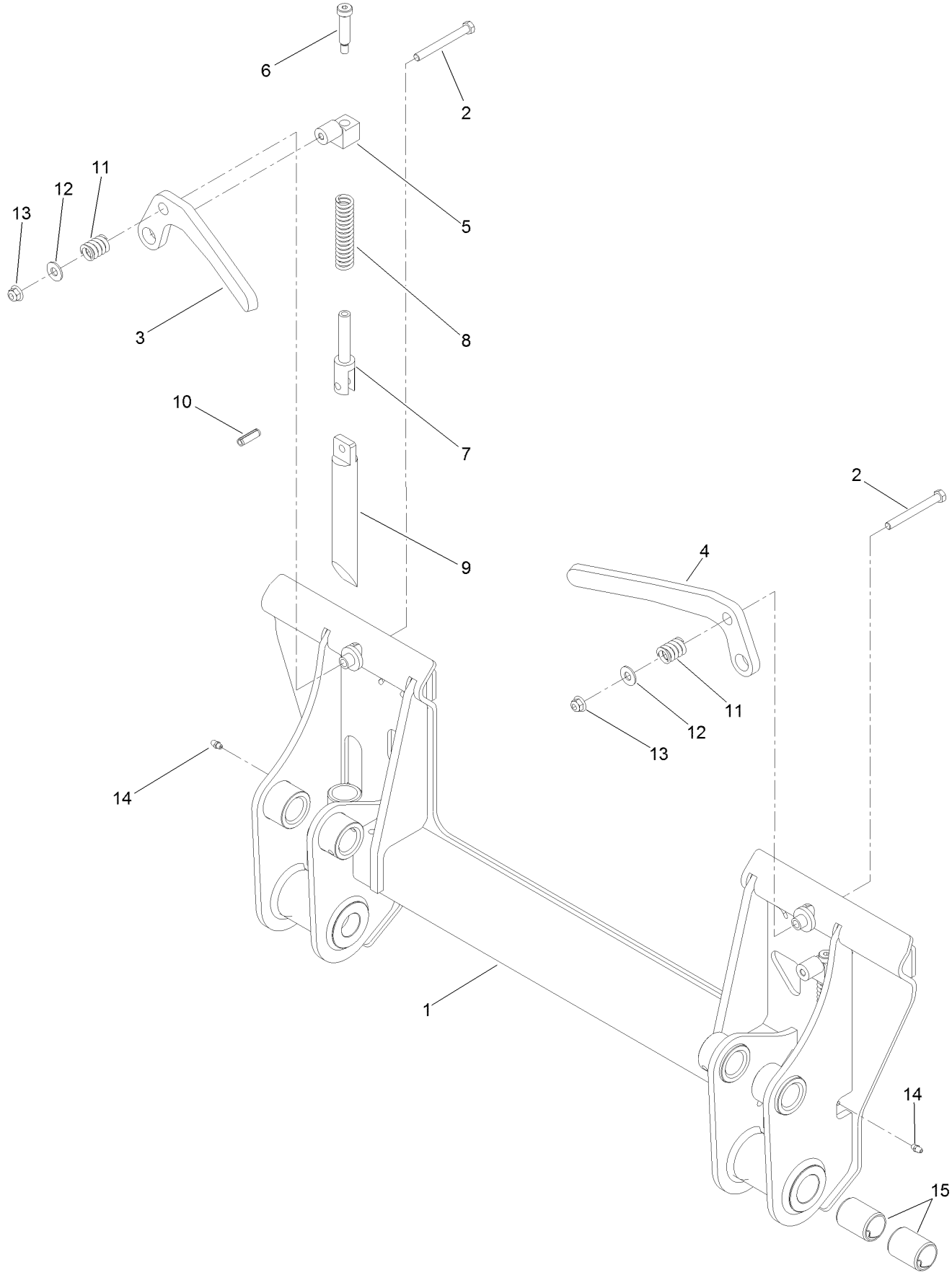

Qtach Assembly No. 132-8468 (continued)

Ref.	Part Number	Qty.	Description
1	132-8459-03	1	Mount-Qtach
2	323-15	2	Screw-HH
3	132-8460-03	1	Handle-Left
4	132-8461-03	1	Handle-Right
5	133-9419	2	Block-Stop
6	1-809062	2	Screw
7	132-8462	2	Link-Handle
8	1-633454	2	Spring-Brake
9	132-8467	2	Pin-Qtach
10	32121-42	2	Pin-Roll
11	95-0772	2	Spring-Compression
12	3256-4	2	Washer-Flat
13	119-4042	2	Nut-HF, NI
14	302-5	2	Fitting-Grease
15	137-0126	4	Bushing-Spring

Hydraulic Cylinder Assemby No. 161-6930

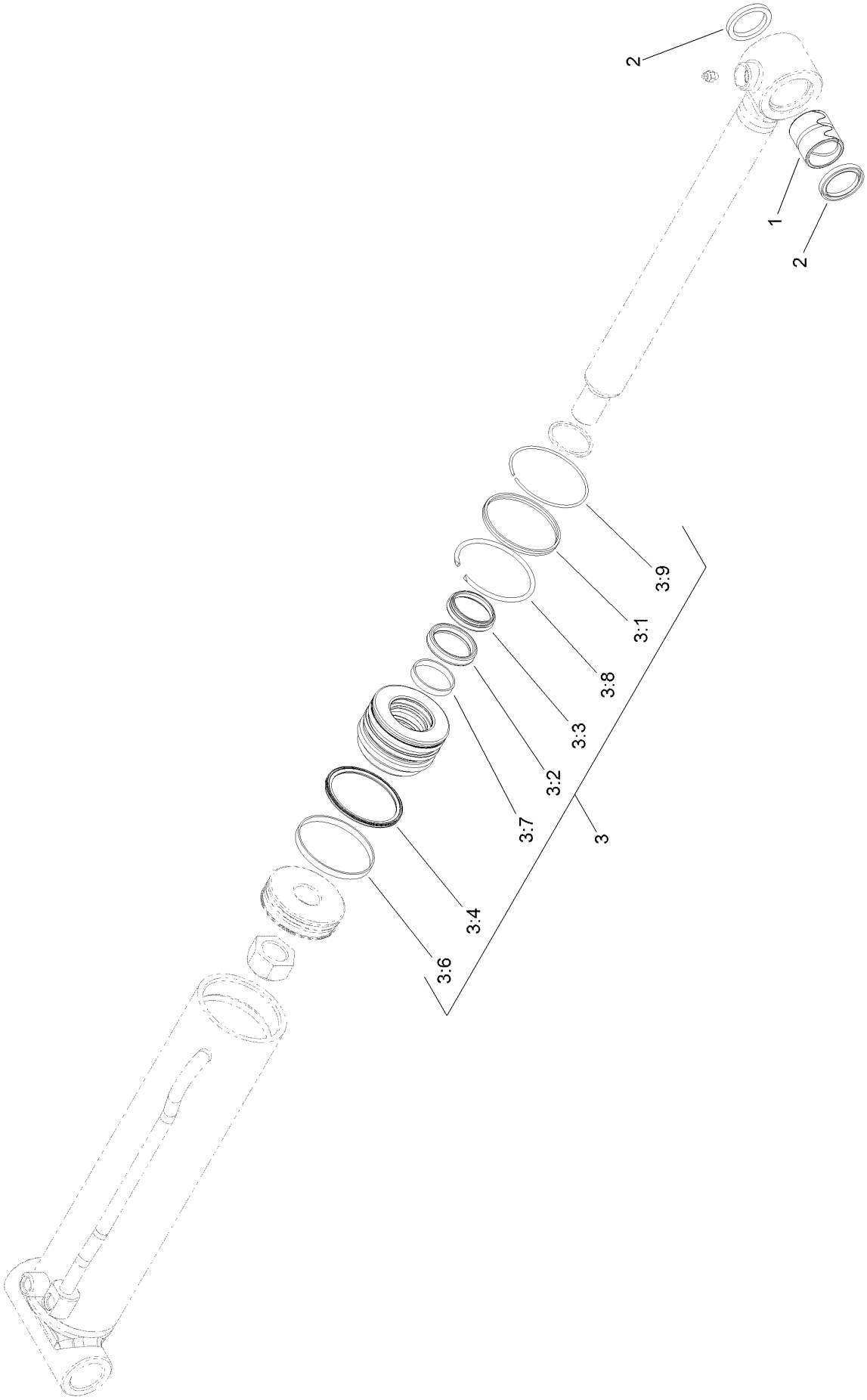

Hydraulic Cylinder Assemby No. 161-6930 (continued)

Ref.	Part Number	Qty.	Description
1	161-6941	1	Bushing-Spring
2	163-5252	2	Seal-Shaft, Oil
3	137-5209	1	Seal Repair Kit
3:1		1	Seal-Dual ●
3:2		1	Seal-Rod ●
3:3		1	Wiper-Rod ●
3:4		1	Seal-Piston ●
3:6		1	Ring-Wear, Piston ●
3:7		1	Ring-Wear, Rod ●
3:8		1	Ring-Retaining, Internal ●
3:9		1	Ring-Retaining, External ●

● Not serviced separately

Platform Assembly

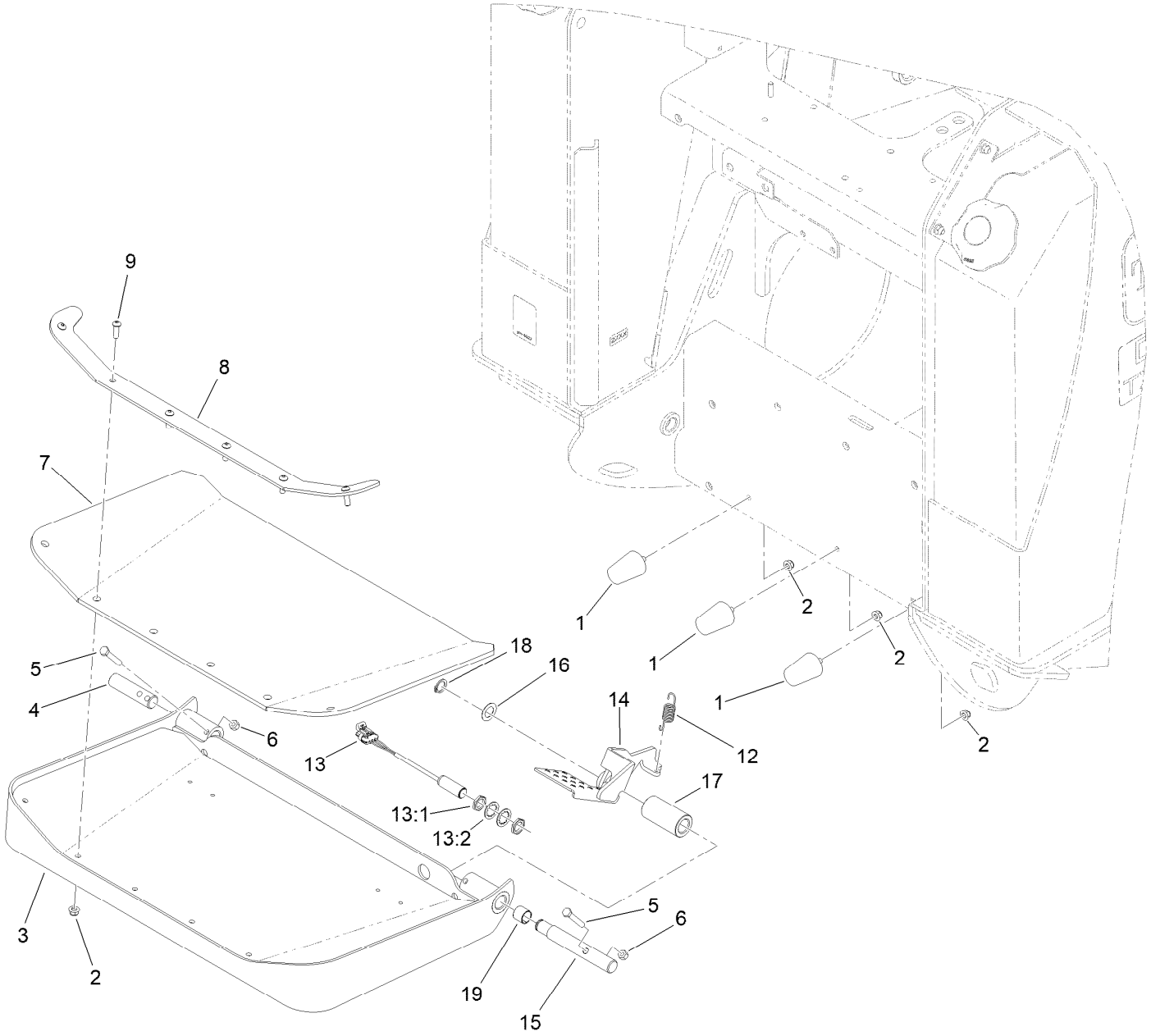

Platform Assembly (continued)

Ref.	Part Number	Qty.	Description
1	110-5070	3	Bumper
2	119-4041	9	Nut-HF
3	138-4672-03	1	Platform
4	125-3749	1	Pin-Cylinder
5	322-10	2	Screw-HH
6	3296-29	2	Nut-Lock, NI
7	161-7296	1	Pad-Platform
8	138-4677-03	1	Bracket-Clamp, Platform
9	3290-511	6	Screw-HSBH
12	137-6189	1	Spring-Extension

Ref.	Part Number	Qty.	Description
13	115-5300	1	Proximity Sensor ASM
13:1	117-3207	2	Nut-Hex
13:2	117-3208	2	Washer-Lock, Internal Tooth
14	144-0735-03	1	Pedal ASM, [black]
15	144-0794	1	Pin-Pivot
16	9202574	1	Washer-Flat
17	144-0737	1	Spacer
18	32120-93	1	Ring-Retaining
19	94-9609	1	Bushing-Straight

Hood and Access Panel Assembly

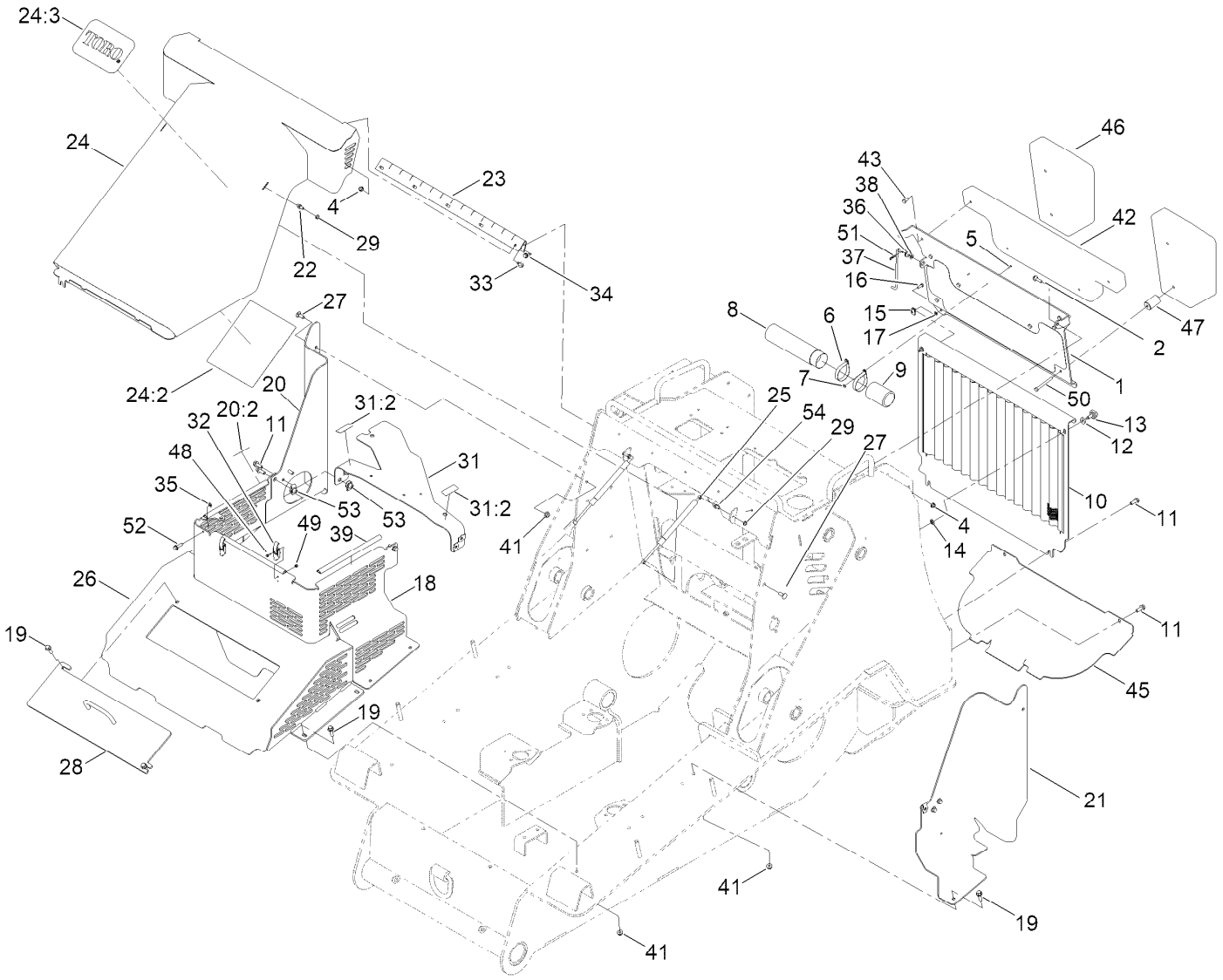

Hood and Access Panel Assembly (continued)

Ref.	Part Number	Qty.	Description
1	136-4854-03	1	Panel-Rear
2	108-3744	2	Screw-Shoulder
4	119-4041	7	Nut-HF
5	3269-17	2	Rivet-Pop
6	2412-120	2	Clamp-R
7	3269-10	2	Washer-Back
8	104-7050	1	Tube-Manual
9	104-7048	1	Cap-Housing
10	133-9353-03	1	Cover-Rear
11	3234-11	10	Screw-HHF
12	106-0565	2	Washer-Rubber
13	95-9648	2	Knob
14	107-3154	2	Nut-Push
15	107069	1	Clip
16	321-4	1	Screw-HH
17	1-803037	1	Nut-Retaining
18	139-7063-03	1	Grill-Panel
19	3234-24	12	Screw-HHF
20	140-4455	1	Cover-Grille, RH
20:2	115-2047	1	Decal-Surface, Hot
21	139-7065-03	1	Panel-Side, LH
22	103-5752	2	Stud-Ball
23	137-0378	1	Hinge-Piano
24	138-4736	1	Hood ASM
24:2	137-5419	1	Decal-Service
24:3	130-2885	1	Decal
25	114-5532	2	Cylinder-Gas

Ref.	Part Number	Qty.	Description
26	138-2409-03	1	Front Cover ASM
27	3231-2	2	Bolt-CARR
28	137-0440-03	1	Cover Plate ASM
29	3296-47	4	Nut-Lock,NI
31	140-4456	1	Bracket-Air Cleaner
31:2	115-2047	2	Decal-Surface, Hot
32	105-3912	2	Latch-Draw
33	3234-5	5	Screw-HHF
34	32104-32	5	Screw-HWH
35	109-5667	1	Nut-Push
36	237-141	1	Grommet-Rubber
37	137-5350	1	Rod-Prop
38	3256-22	1	Washer-Flat
39	137-0393	3	Liner-Foam
41	119-4042	12	Nut-HF, NI
42	137-0405	1	Cushion-Pad
43	322-3	4	Screw-HH
45	132-8485-01	1	Cover-Access, Bottom
46	137-0536	2	Pad-Rear
47	138-2318	4	Spacer-Pad
48	112-3169	4	Screw-HHF, Serrated
49	3296-1	4	Nut-Lock
50	322-14	4	Screw-HH
51	3290-307	1	Pin-Cotter
52	32144-49	1	Screw-HWHTF
53	105-4886	6	Nut-Tinnerman
54	145-4951	2	Stud-Ball

Electrical Assembly

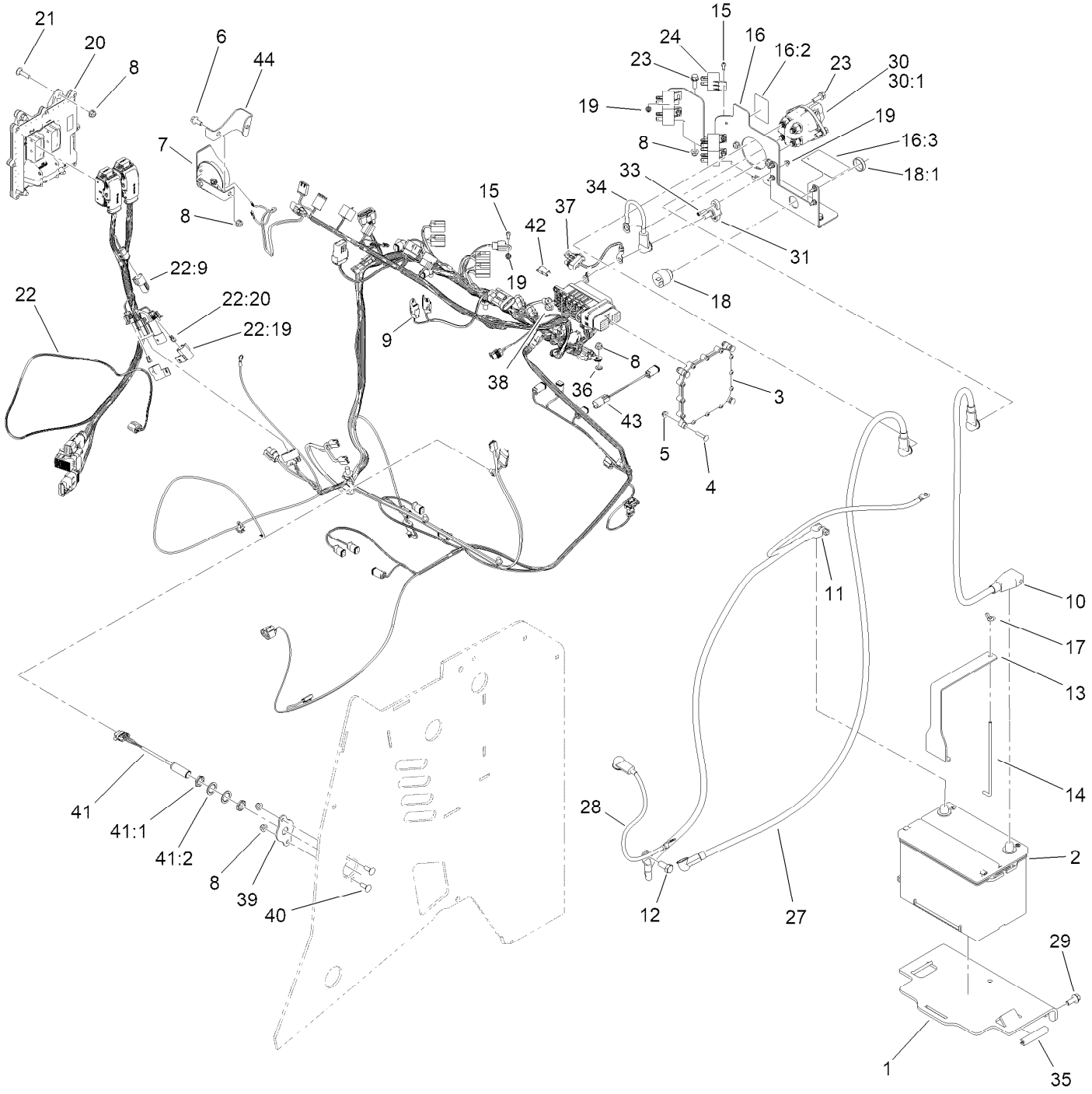

Electrical Assembly (continued)

Ref.	Part Number	Qty.	Description
1	137-0374-03	1	Bracket-Battery
2	106-5190	1	Battery, 660 CCA W/O Electrolyte
3	127-2770	1	Controller
4	3229-3	4	Screw-CARR
5	104-7201	4	Nut-HF, NI
6	3234-47	1	Screw-HHF
7	116749	1	Horn
8	119-4041	13	Nut-HF
9	122-3967	1	Harness-Wire, Main
10	136-6090	1	Cable-Battery, Positive
11	136-6091	1	Cable-Battery, Negative
12	AU514-842	1	Screw-HH
13	133-9422-03	1	Plate-Hold, Battery
14	130-5220	1	Rod-Hold Down, Battery
15	3290-126	9	Screw-HWH
16	161-7282	1	Bracket-Components, Electrical
16:2	137-7164	1	Decal-Power, Battery
16:3	161-7273	1	Decal - Fuses
17	1-803038	1	Wingnut
18	80-9330	1	Audio Alarm ASM
18:1	104-5107	1	Nut-Plastic, Knurled
19	120-4578	11	Nut-HF
20	136-4739	1	Ecu-Engine
21	3230-3	4	Screw-CARR
22	122-2173	1	Harness-Wire,
22:9	32180-043	1	Resistor-120 Ohm
22:19	32180-101	2	Cover-Fuse, Single
22:20	121-8864	2	Fuse-Mini Blade, 5 Amp
23	3234-29	5	Screw-HHF
24	99-7435	6	Relay
27	136-4754	1	Cable-Battery, Positive
28	136-4816	1	Cable-Battery, Positive
29	3234-11	3	Screw-HHF
30	122-0603	1	Switch-Disconnect
30:1	33006-00	1	Nut-HF
31	110-8822	1	Block-Junction
33	3274-14	2	Screw-HSH
34	137-0525	1	Cable-Battery, Positive
35	70-2041	2	Trim - Edge
36	3255-8	1	Washer-Lock
37	122-0084	1	Harness-Wire, Fusible Link
38	119-4042	1	Nut-HF, NI
39	138-4709	1	Plate-Mount, Sensor
40	3230-16	2	Screw-CARR
41	115-5300	1	Proximity Sensor ASM
41:1	117-3207	2	Nut-Hex
41:2	117-3208	2	Washer-Lock, Internal Tooth
42	136-4862	1	Harness-Wire, Fusible Link
43	136-4868	1	Harness-Wire, Aux Jumper
44	163-5267-0P	1	Bracket-Horn

Main Wire Harness Assembly No. 122-3967

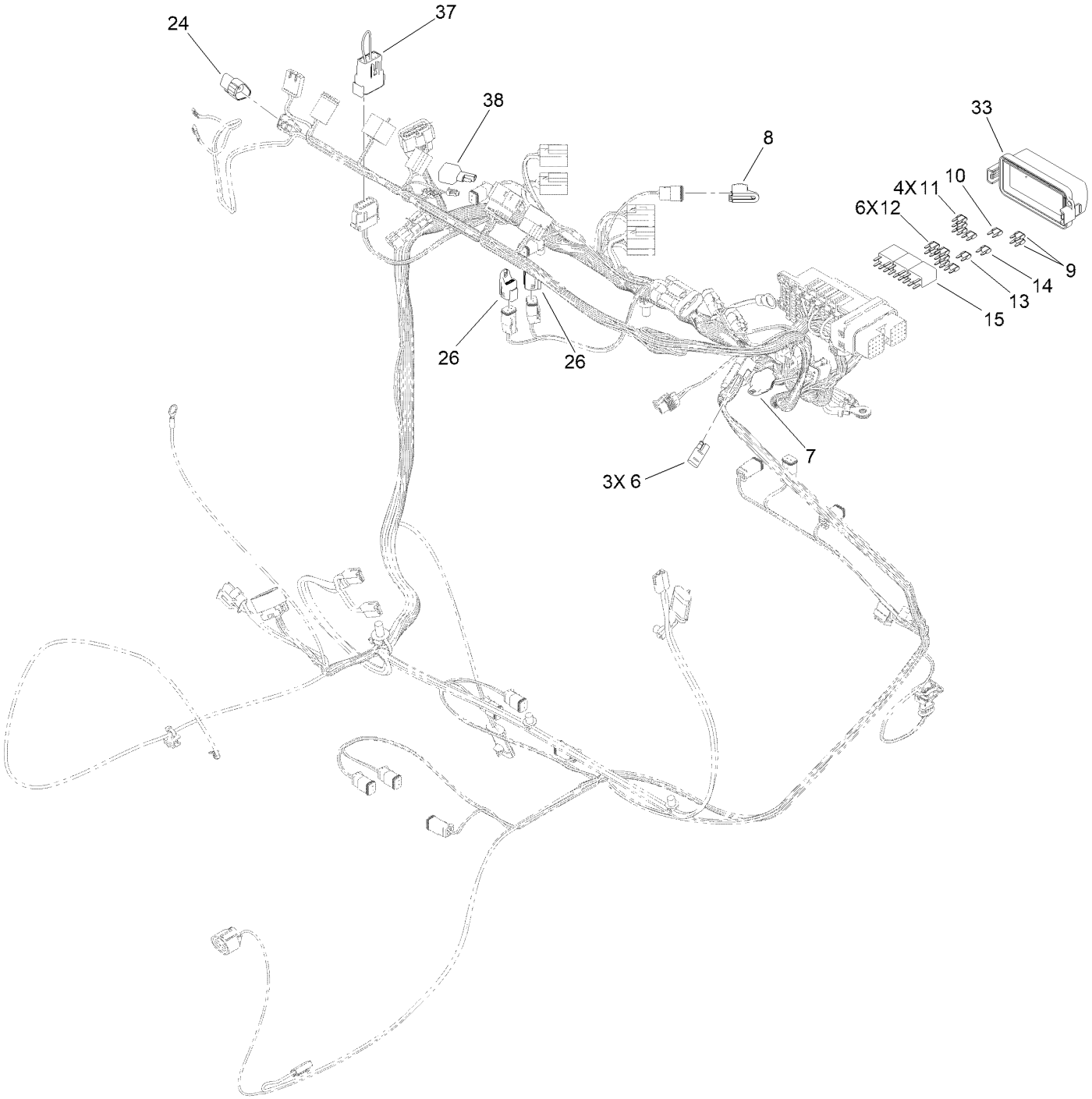

Main Wire Harness Assembly No. 122-3967 (continued)

Ref.	Part Number	Qty.	Description
6	116-0053	3	Cap-Plug
7	32180-156	1	Cap-Plug, 6 Way
8	32180-089	1	Cap-Plug, 3 Way
9	121-8861	2	Fuse-Mini Blade, 2 Amp
10	121-8864	1	Fuse-Mini Blade, 5 Amp
11	121-8865	4	Fuse-Mini Blade, 7.5 Amp
12	121-8866	6	Fuse-Mini Blade, 10 Amp
13	121-8868	1	Fuse-Mini Blade, 20 Amp
14	121-8869	1	Fuse-Mini Blade, 25 Amp
15	122-0368	3	Relay-280 ISO
24	32180-043	1	Resistor-120 Ohm
26	32180-091	2	Cap-Dust, 2 Way
33	32180-229	1	Cover-Littelfuse, Pdm 60F
37	122-3975	1	Harness-Wire, Jumper
38	100-4918	1	Diode

Crankcase Assembly

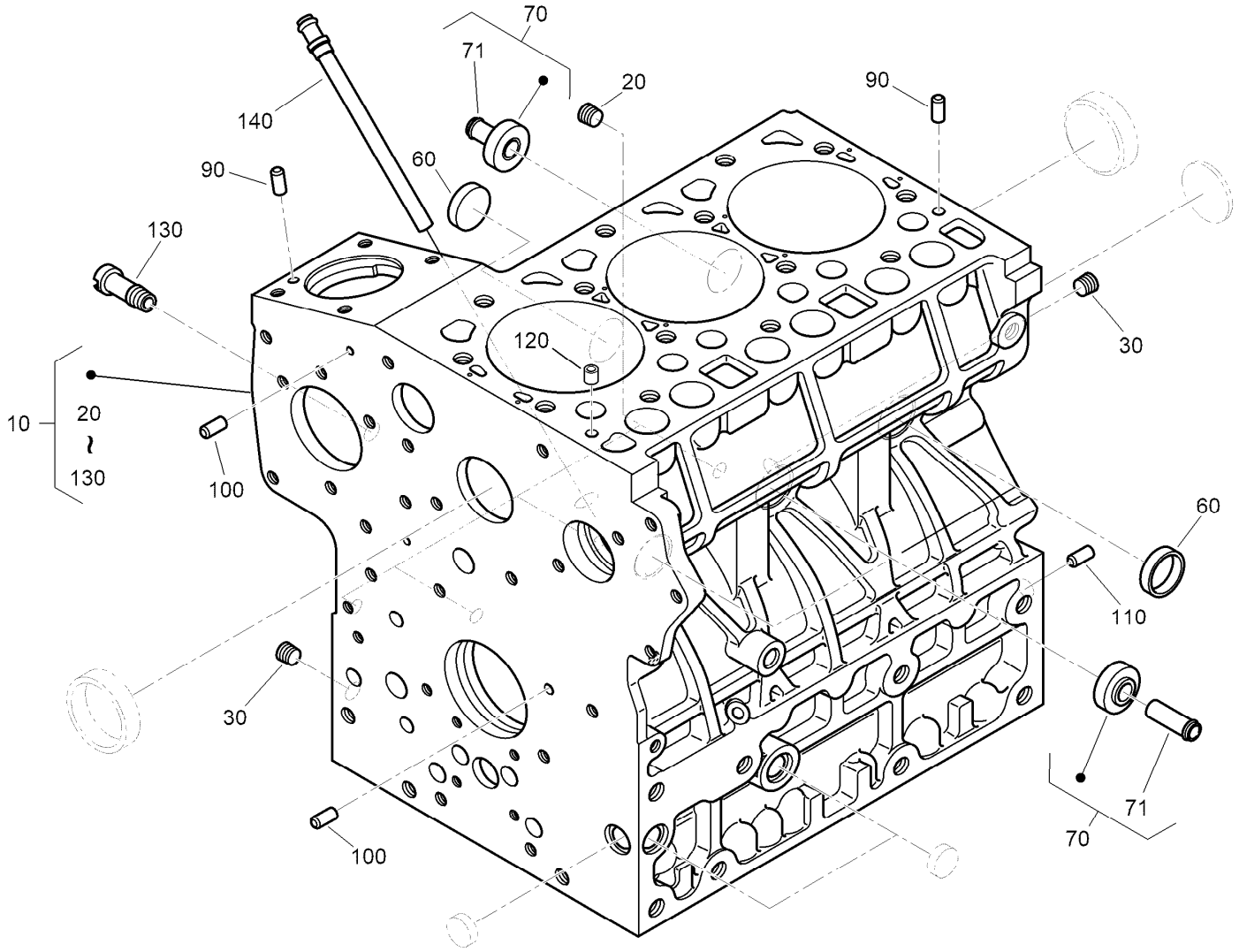

Crankcase Assembly (continued)

Ref.	Part Number	Qty.	Description
10	139-9772	1	Crankcase
20	98-7487	4	Plug
30	98-7488	2	Plug
60	98-7500	3	Cap-Sealing
70	139-4711	2	Pipe
71	139-9578	2	Pipe-Return, Water

Ref.	Part Number	Qty.	Description
90	98-7503	2	Pin-Straight
100	98-7504	2	Pin-Straight
110	98-7505	1	Pin-Straight
120	98-7506	1	Pin-Pipe
130	100-9153	1	Pipe-Return, Water
140	139-9729	1	Pipe-Return, Oil

Oil Pan Assembly

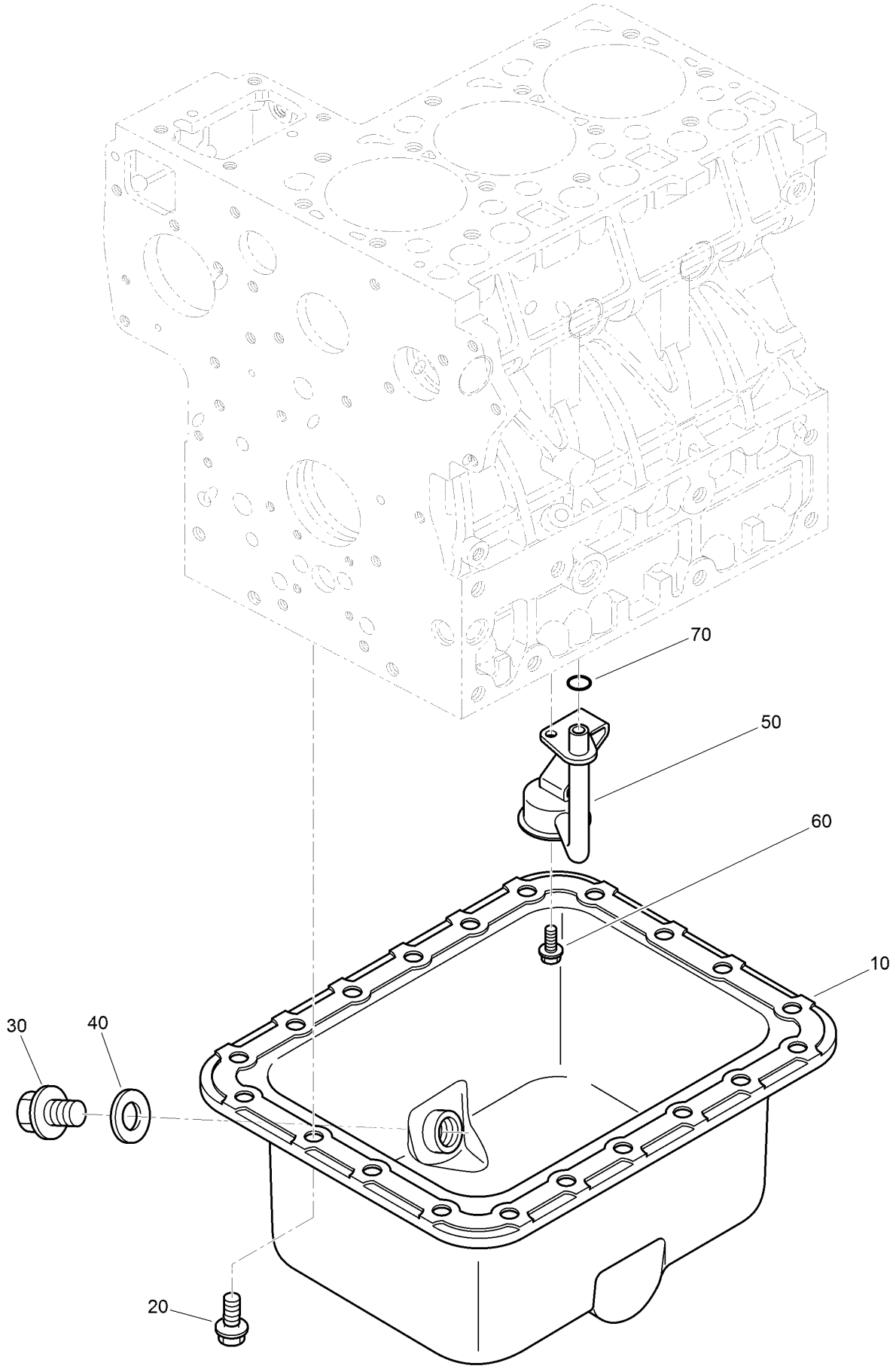

Oil Pan Assembly (continued)

Ref.	Part Number	Qty.	Description
10	139-4713	1	Pan-Oil
20	139-9663	20	Bolt-Flange
30	114-8151	1	Plug-Drain
40	AU87421317	1	Washer-Seal
50	139-9658	1	Filter-Oil
60	115-8504	1	Bolt-Flange
70	108-7054	1	O-Ring

Oil Dipstick and Guide Assembly

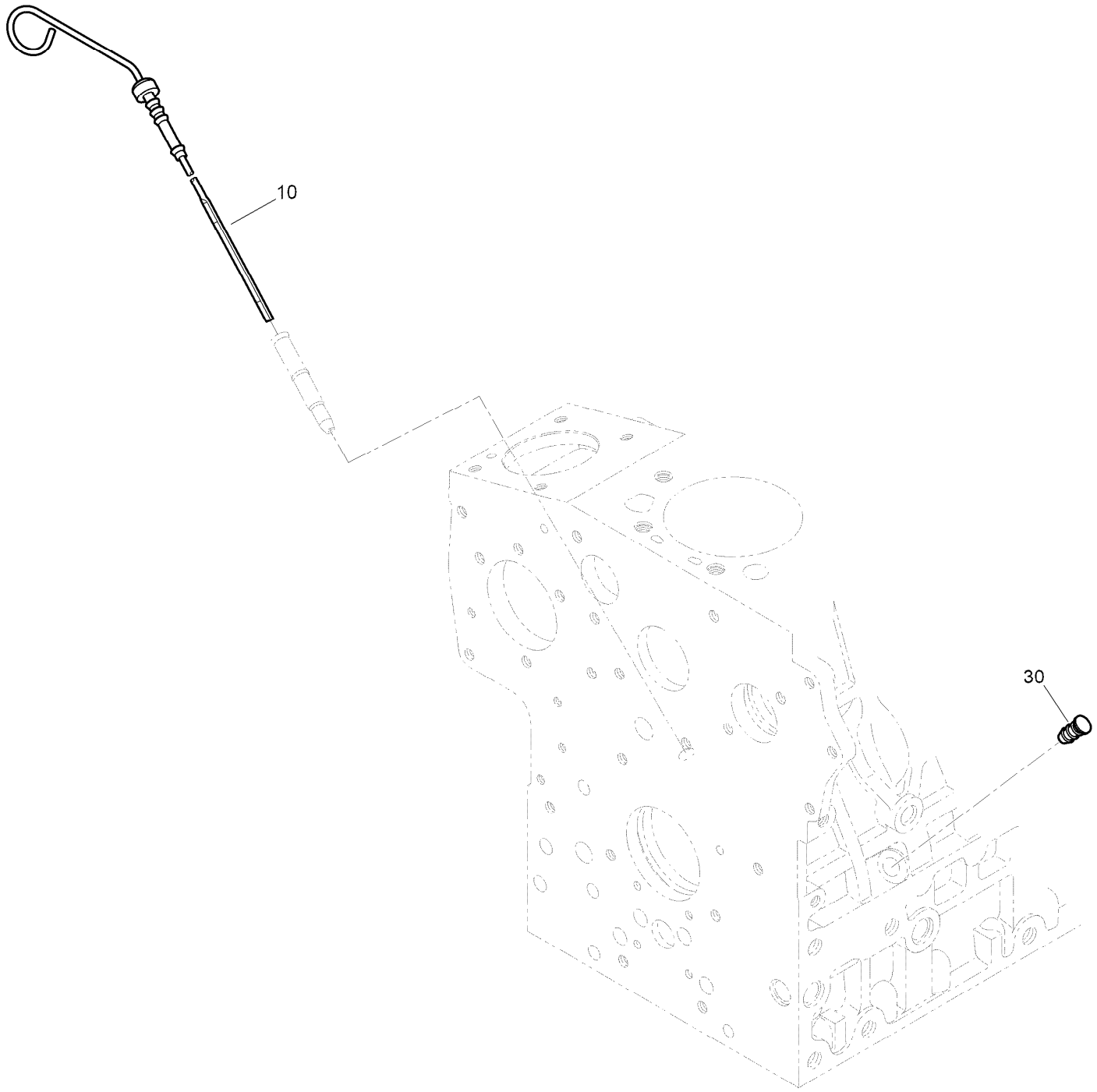

Oil Dipstick and Guide Assembly (continued)

Ref.	Part Number	Qty.	Description
10	130-1565	1	Gauge-Oil, Engine
30	139-9638	1	Plug-Gauge, Oil

Oil Pump Assembly

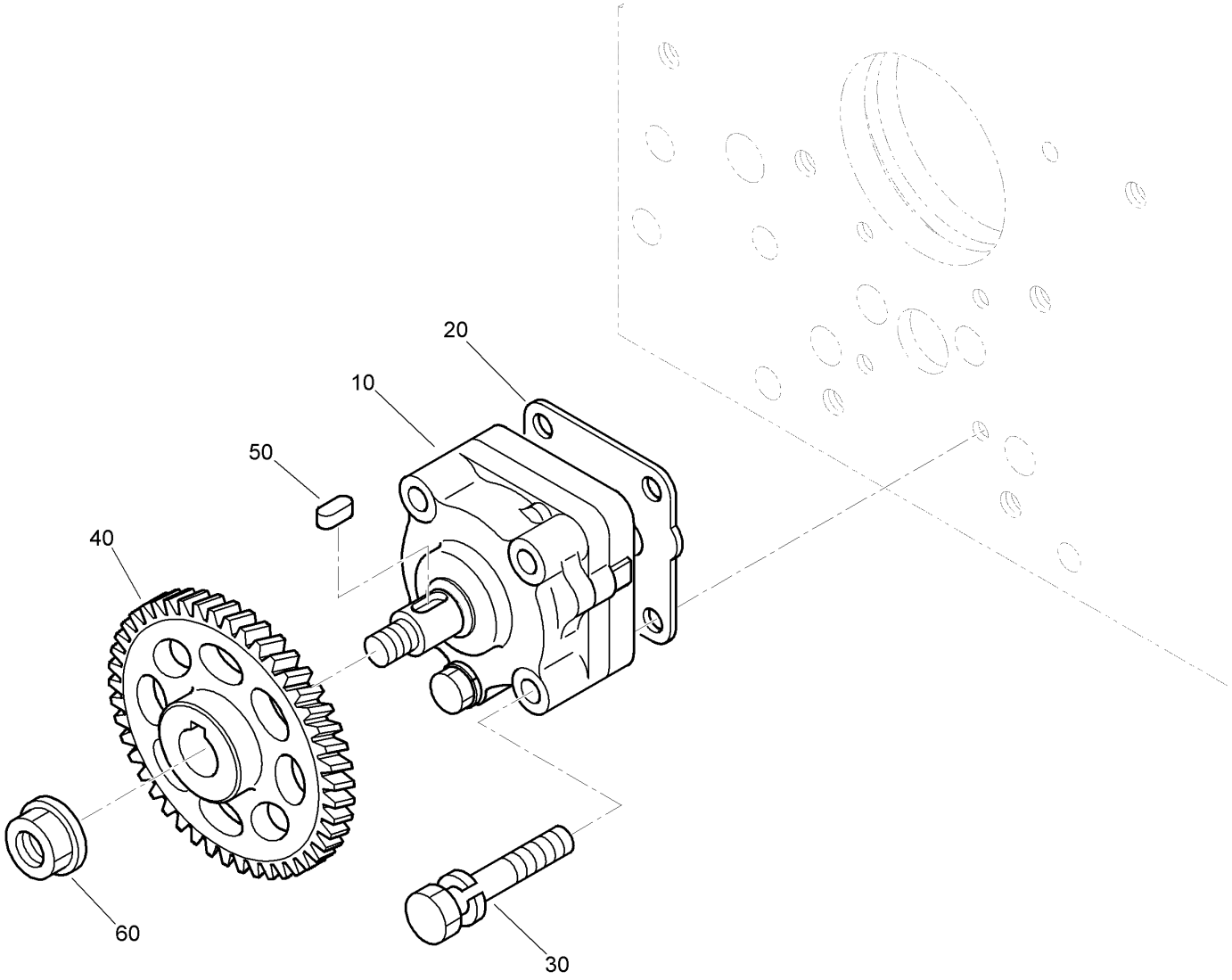

Oil Pump Assembly (continued)

Ref.	Part Number	Qty.	Description
10	139-9628	1	Oil-Pump
20	139-9596	1	Gasket-Pump, Oil
30	125-9063	4	Bolt-Sems
40	130-1453	1	Gear-Drive, Oil Pump
50	98-7517	1	Key-Feather
60	139-9528	1	Nut

Cylinder Head Assembly

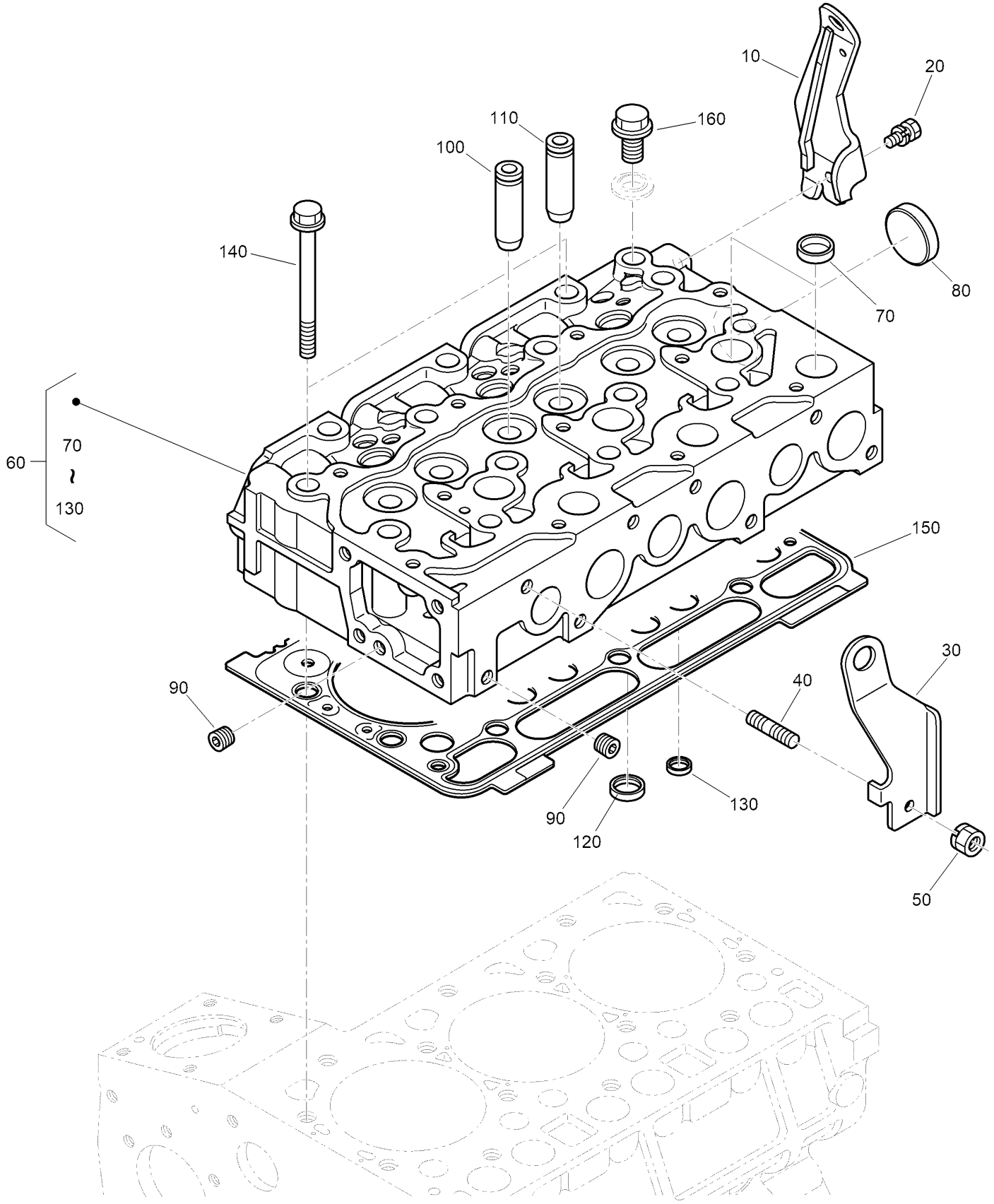

Cylinder Head Assembly (continued)

Ref.	Part Number	Qty.	Description
10	139-4705	1	Hook-Engine, Rear
20	98-7526	1	Bolt
30	139-9756	1	Hook-Engine, Front
40	139-9531	1	Bolt-Stud
50	100-9288	1	Nut
60	139-9777	1	Head-Cylinder
70	139-9522	9	Plug-Cup
80	139-9523	1	Cap-Sealing
90	98-9687	2	Plug
100	139-9665	3	Guide-Valve, Inlet
110	139-9626	3	Guide-Valve, Exhaust
120	139-9562	3	Seat-Valve, Inlet
130	139-9561	3	Seat-Valve, Exhaust
140	139-9580	14	Bolt-Head, Cylinder
150	139-9645	1	Gasket-Head, Cylinder
150	139-9644	1	Gasket-Head, Cylinder
150	139-9646	1	Gasket-Head, Cylinder
150	139-9647	1	Gasket-Head, Cylinder
150	139-9648	1	Gasket-Head, Cylinder
160	98-7762	1	Plug

Inlet and Exhaust Manifold Assembly

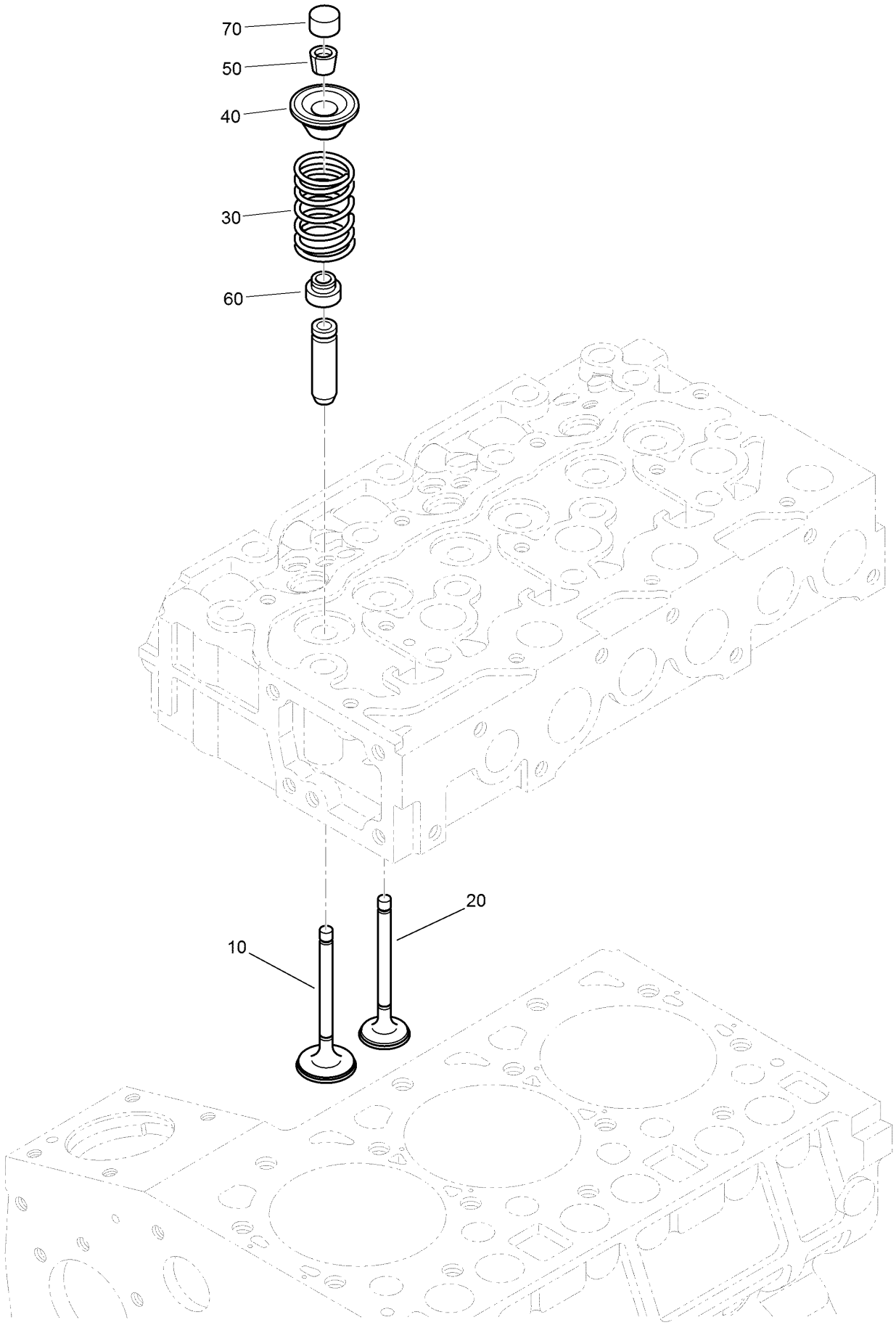

Inlet and Exhaust Manifold Assembly (continued)

Ref.	Part Number	Qty.	Description
10	139-9660	3	Valve-Inlet
20	139-9661	3	Valve-Exhaust
30	130-1450	6	Spring-Valve
40	98-7794	6	Retainer-Spring, Valve
50	139-9525	6	Collet-Valve, Spring
60	139-9524	6	Seal-Stem, Valve
70	130-1451	6	Cap-Valve

Rocker Arm Assembly

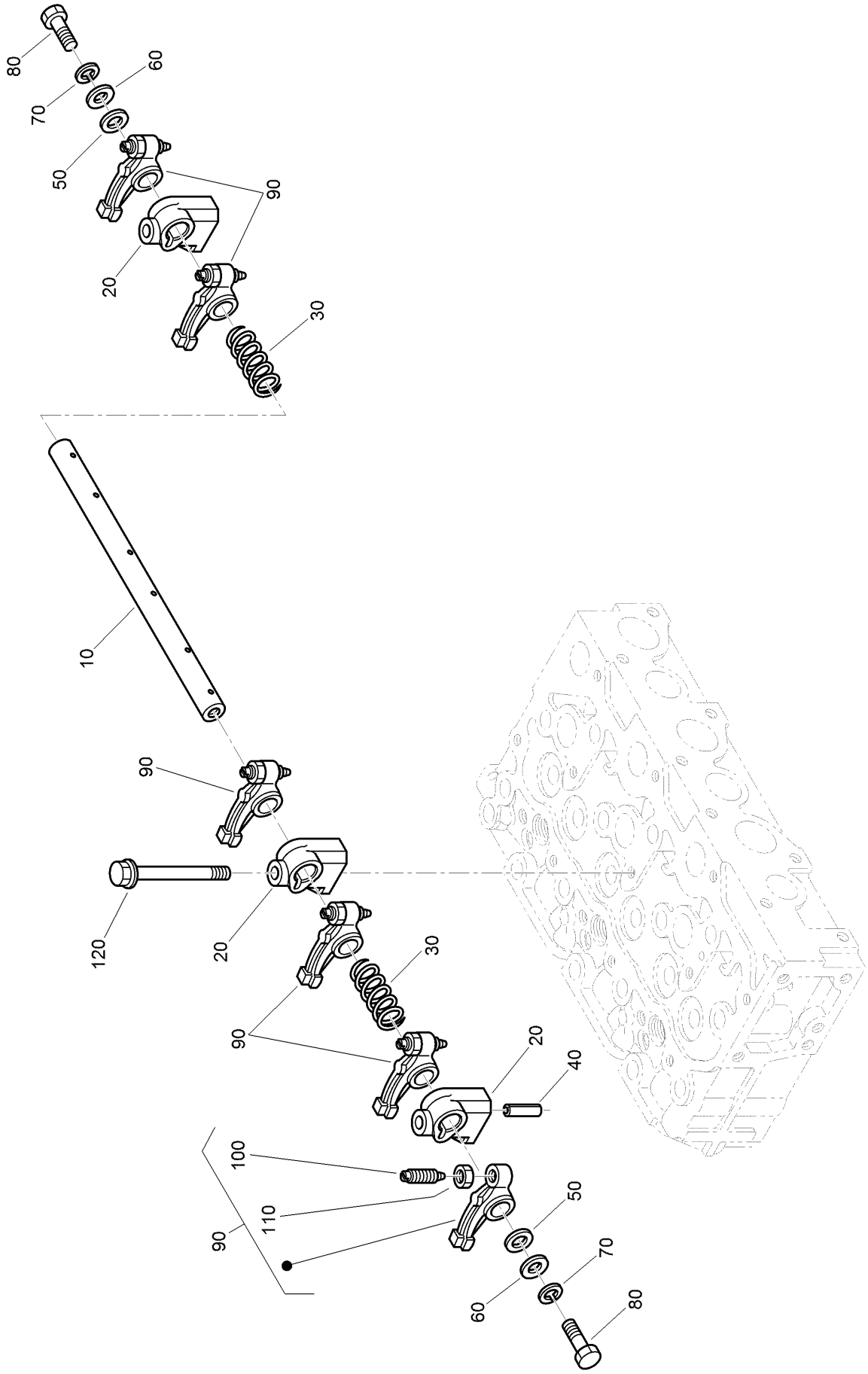

Rocker Arm Assembly (continued)

Ref.	Part Number	Qty.	Description
10	139-9592	1	Shaft-Arm, Rocker
20	139-9526	3	Bracket-Arm, Rocker
30	98-7807	2	Spring-Arm, Rocker
40	98-7805	1	Pin-Spring
50	98-7806	2	Washer
60	120-5832	2	Washer-Plain
70	105-2893	2	Washer-Spring
80	98-7884	2	Bolt
90	98-7809	6	Rocker Arm ASM
100	130-1452	6	Screw-Adjusting
110	98-7811	6	Nut
120	108-7091	3	Bolt-Flange

Cylinder Head Cover Assembly

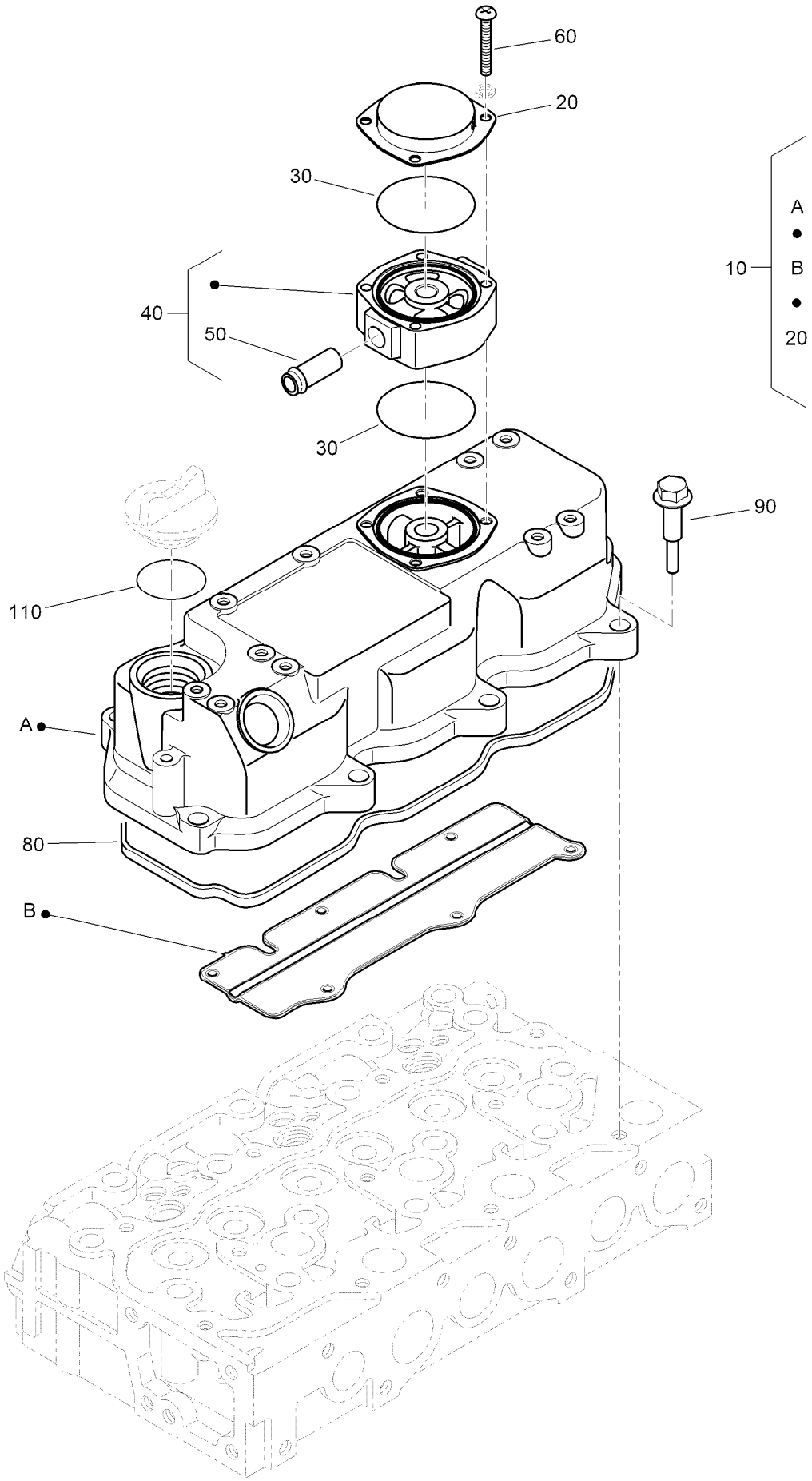

Cylinder Head Cover Assembly (continued)

Ref.	Part Number	Qty.	Description
10	139-9761	1	Head Cover ASM
20	139-9643	1	Cover-Breather
30	108-7061	2	O Ring-Breather
40	139-9747	1	Spacer-Breather
50	139-9578	1	Pipe-Return, Water
60	139-9508	4	Screw-Phillips, Pan Head
80	139-9593	1	Gasket-Cover, Head
90	108-7063	8	Bolt
110	108-7064	1	O-Ring

Gear Case Assembly

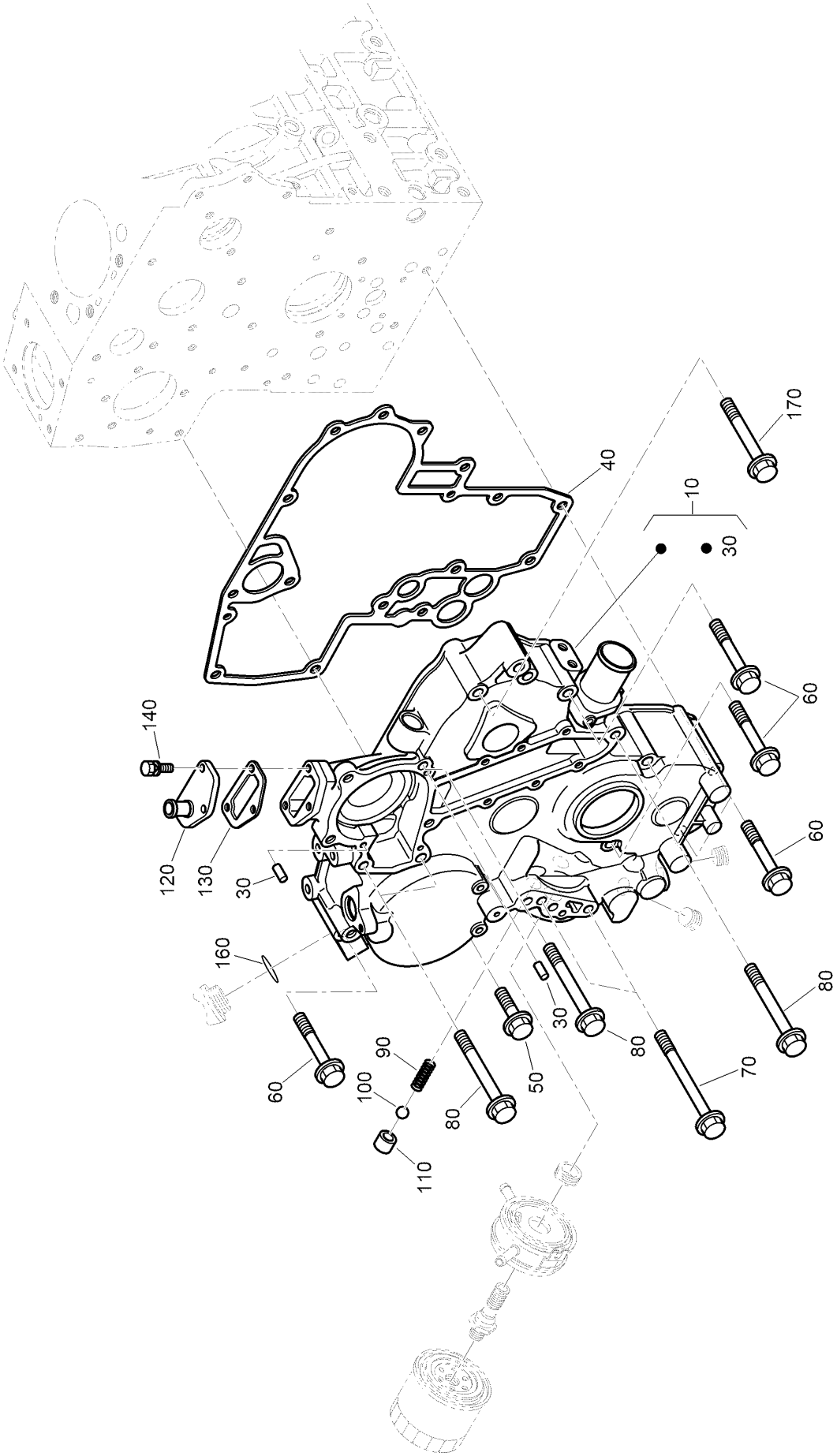

Gear Case Assembly (continued)

Ref.	Part Number	Qty.	Description
10	139-9629	1	Case-Gear
30	98-7504	2	Pin-Straight
40	139-9727	1	Gasket-Case, Gear
50	108-7085	1	Bolt-Flange
60	139-9602	6	Bolt-Sems
70	139-9654	2	Bolt-Sems
80	115-8520	4	Bolt-Flange
90	139-9529	1	Spring

Ref.	Part Number	Qty.	Description
100	139-9533	1	Seat-Valve
110	98-7565	1	Ball
120	139-9534	1	Flange-Return, Water
130	139-9598	1	Gasket-Flange, Return
140	98-7568	3	Bolt
160	108-7064	1	O-Ring
170	139-9543	1	Bolt-Hex

Oil Filter Cartridge Assembly

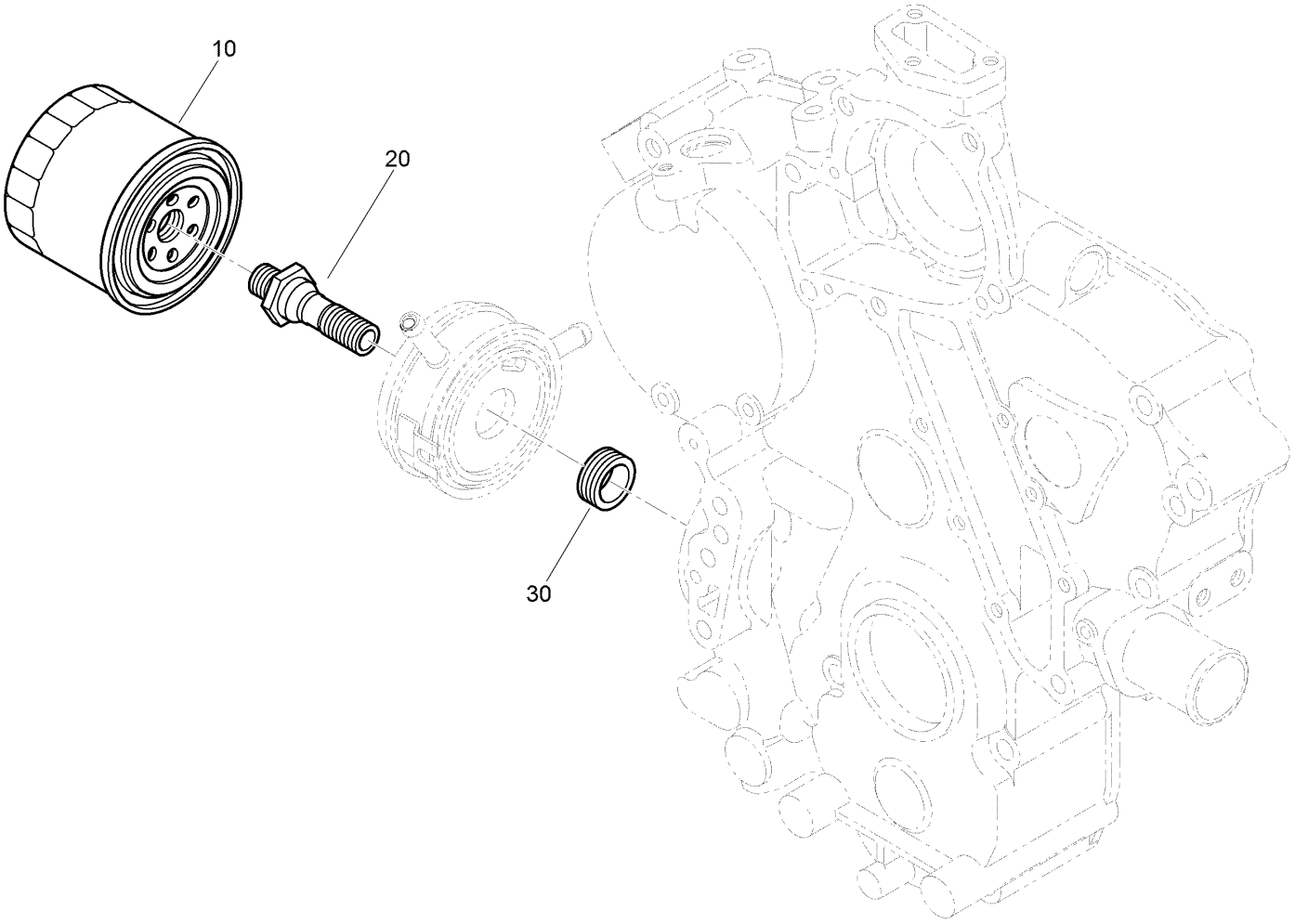

Oil Filter Cartridge Assembly (continued)

Ref.	Part Number	Qty.	Description
10	104-5169	1	Filter-Oil
20	139-9641	1	Connector
30	139-9668	1	Collar

Main Bearing Case Assembly

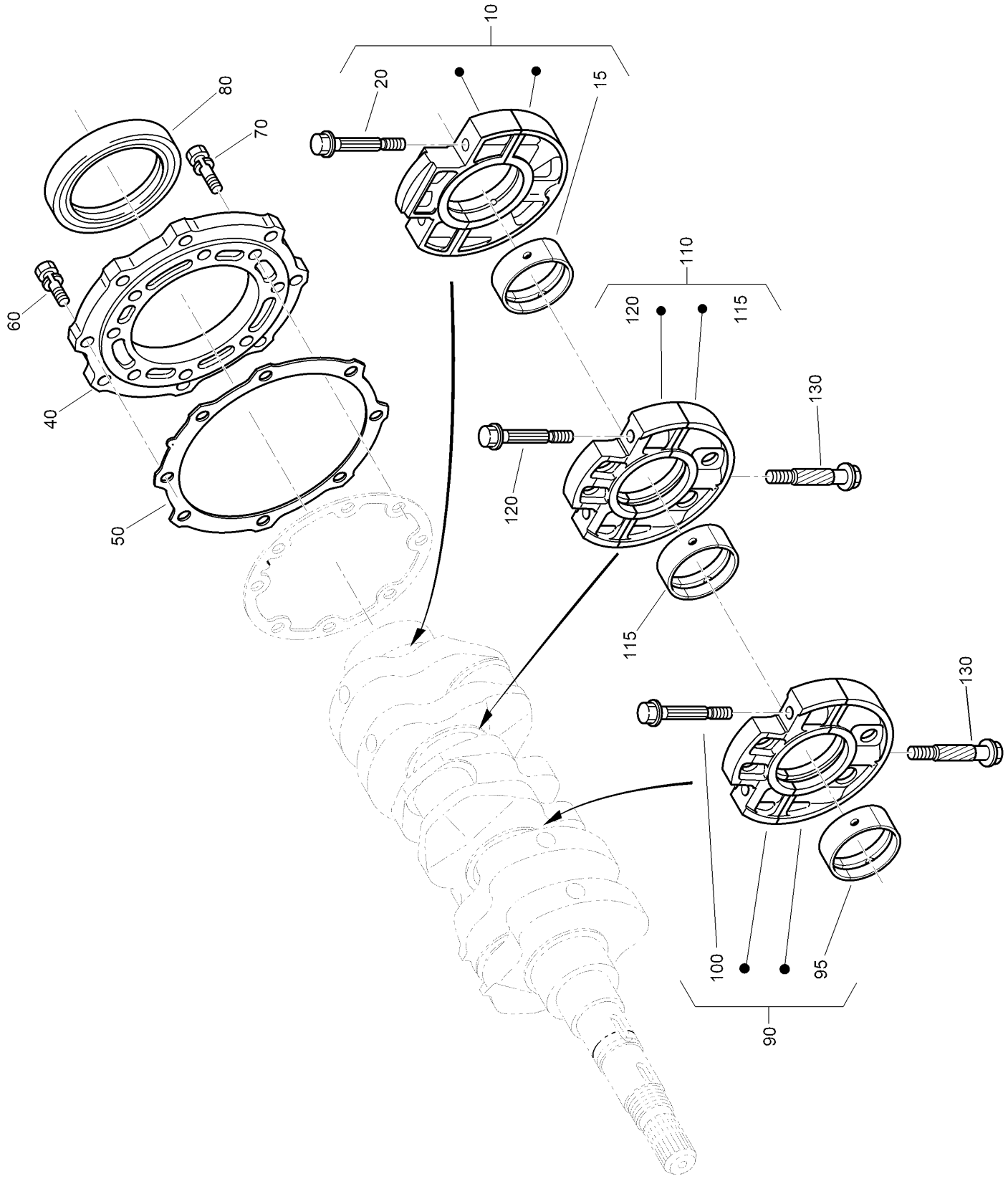

Main Bearing Case Assembly (continued)

Ref.	Part Number	Qty.	Description
10	139-9610	1	Wheel Bearing Case ASM
10	139-9798	3	Piston (05)
15	139-9614	1	Metal-Crankshaft
15	108-7068	1	Metal-Crankshaft (-0.20MM)
15	108-7069	1	Metal-Crankshaft (-0.40MM)
20	108-7066	2	Bolt-Case, Bearing
40	139-9659	1	Cover-Case, Bearing
50	98-7437	1	Gasket-Case Cover, Bearing
60	98-7438	8	Bolt
70	98-7439	8	Bolt
80	139-9542	1	Seal-Oil
90	139-9606	1	Case-Bearing, Main
95	139-9614	1	Metal-Crankshaft
95	108-7068	1	Metal-Crankshaft (-0.20MM)
95	108-7069	1	Metal-Crankshaft (-0.40MM)
100	108-7066	2	Bolt-Case, Bearing
110	139-9607	1	Main Bearing Case ASM
115	139-9614	1	Metal-Crankshaft
115	108-7068	1	Metal-Crankshaft (-0.20MM)
115	108-7069	1	Metal-Crankshaft (-0.40MM)
120	108-7066	2	Bolt-Case, Bearing
130	98-7444	2	Bolt-Case, Bearing

Piston and Crankshaft Assembly

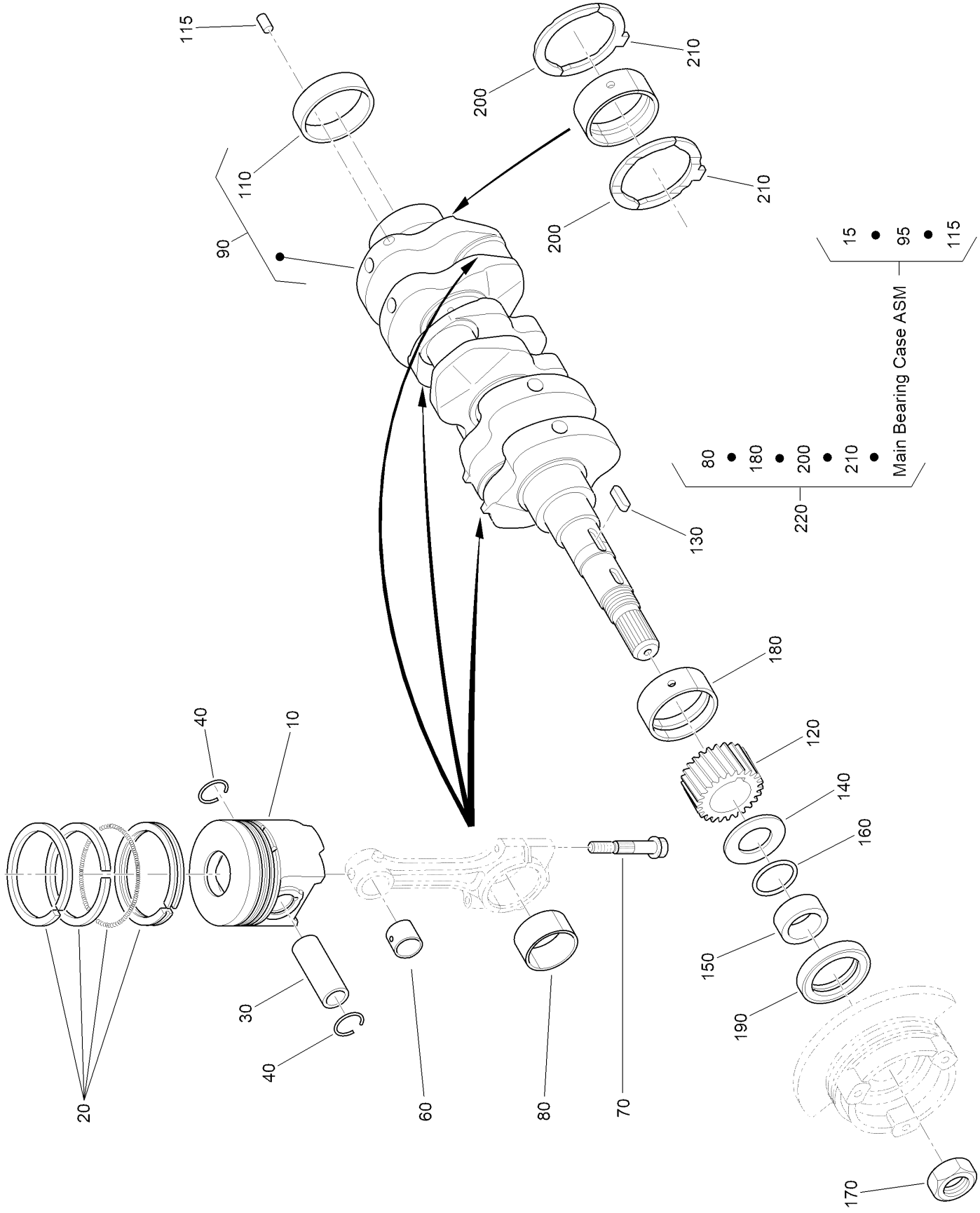

Piston and Crankshaft Assembly (continued)

Ref.	Part Number	Qty.	Description
10	139-9799	3	Piston (05)
20	139-9674	3	Piston Ring ASM
20	139-9675	3	Piston Ring ASM
30	139-9594	3	Pin-Piston
40	139-9634	6	Circlip-Internal
60	139-9676	3	Bushing-Pin, Piston
70	139-9694	6	Bolt-Rod, Connecting
80	98-7469	3	Metal-Crankpin (STD)
80	139-9576	3	Metal-Crankpin (02)
80	139-9577	3	Metal-Crankpin (04)
90	139-9653	1	Crankshaft
110	98-7474	1	Sleeve-Crankshaft
115	139-9595	1	Pin-Straight
120	139-4712	1	Gear-Crankshaft
130	115-8552	1	Key-Feather
140	98-7476	1	Slinger-Oil
150	98-7477	1	Collar-Crankshaft
160	98-7478	1	O-Ring
170	98-7479	1	Nut-Crankshaft
180	139-9613	1	Metal-Crankshaft
180	108-7076	1	Metal-Crankshaft (-0.20MM)
180	108-7077	1	Metal-Crankshaft (-0.40MM)
190	139-4709	1	Seal-Oil
200	139-9615	2	Metal-Side
200	108-7079	2	Metal-Side (+0.20MM)
200	108-7080	2	Metal-Side (+0.40MM)
210	139-9616	2	Metal-Side
210	108-7082	2	Metal-Side (+0.20MM)
210	108-7083	2	Metal-Side (+0.40MM)
220	139-9655	1	Engine Metal Kit
220	108-7076	1	Metal-Crankshaft (-0.20MM)
220	139-9656	1	Engine Metal Kit

Cam Shaft and Idle Gear Assembly

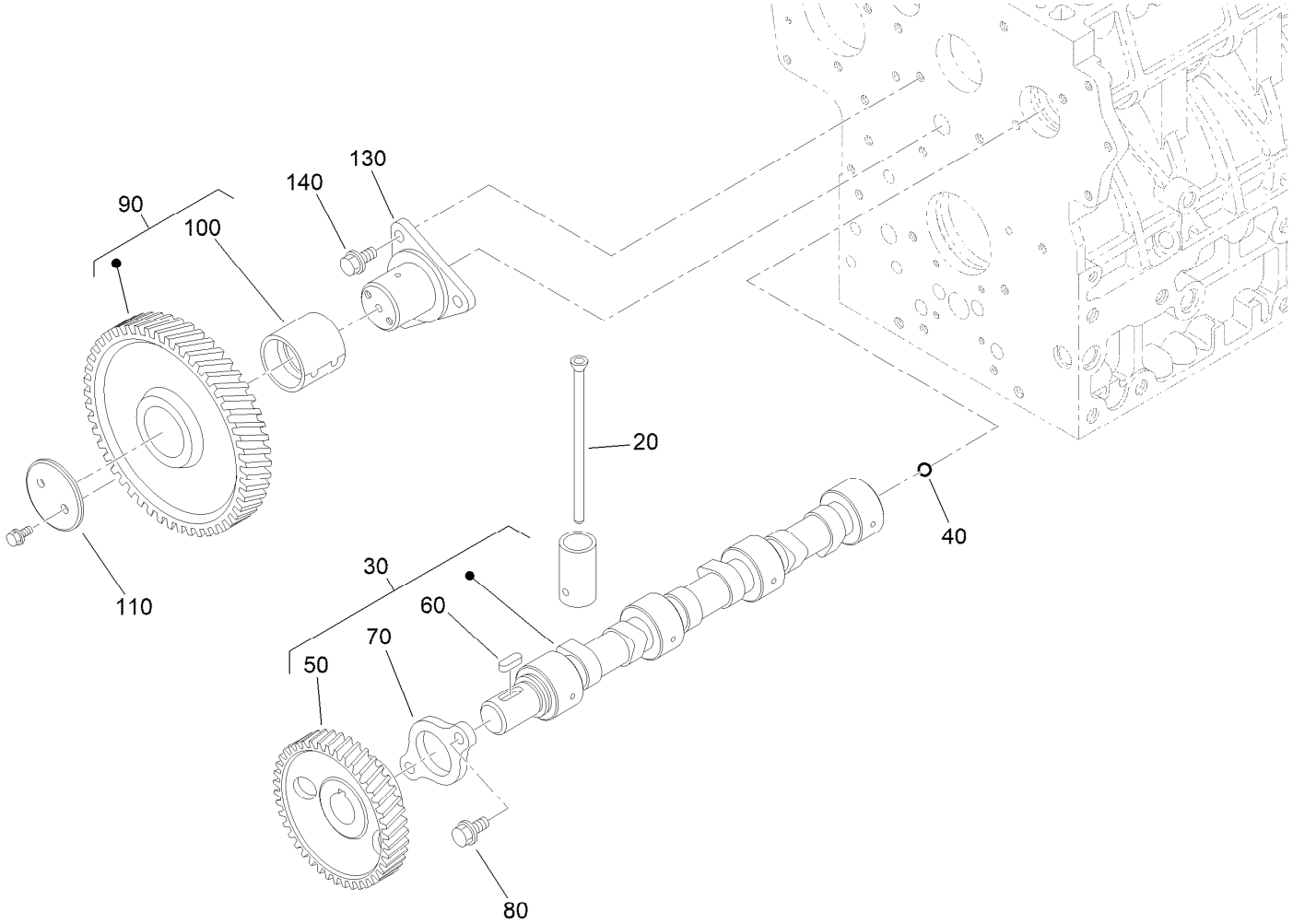

Cam Shaft and Idle Gear Assembly (continued)

Ref.	Part Number	Qty.	Description
20	139-9611	6	Rod-Push
30	139-9652	1	Camshaft ASM
40	110-3729	1	Ball
50	139-9612	1	Gear-Camshaft
60	98-7451	1	Key-Feather
70	139-9527	1	Stopper-Camshaft

Ref.	Part Number	Qty.	Description
80	130-1159	2	Bolt-Flange
90	139-4710	1	Gear-Idle
100	130-1559	1	Bushing-Gear, Idle
110	130-1556	1	Collar-Gear, Idle
130	130-1332	1	Shaft-Gear, Idle
140	130-1159	3	Bolt-Flange

Flywheel Assembly

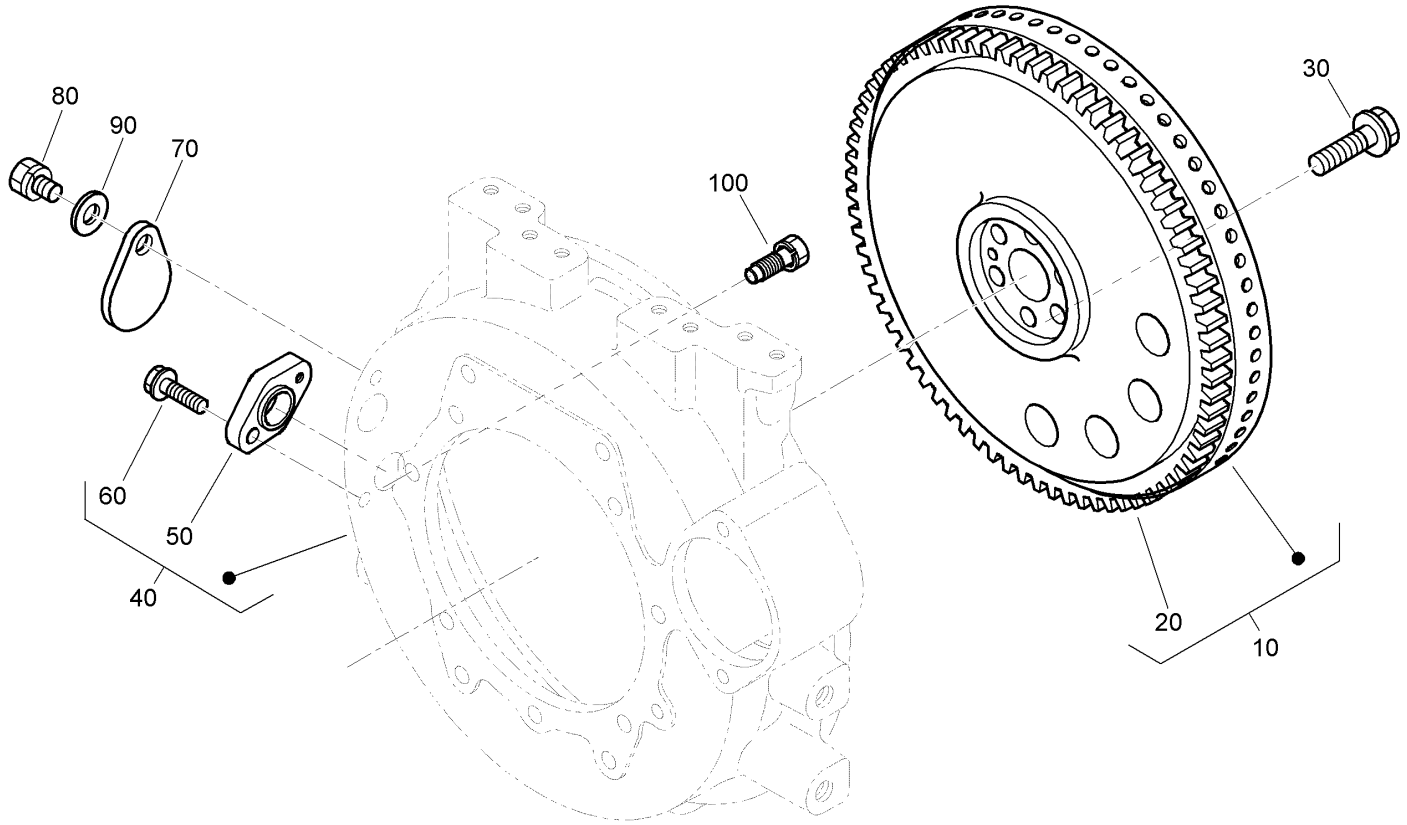

Flywheel Assembly (continued)

Ref.	Part Number	Qty.	Description
10	139-9763	1	Flywheel
20	139-9597	1	Gear-Ring
30	139-9671	6	Bolt-Flywheel
40	139-9728	1	Housing-Flywheel
50	139-9743	1	Bracket-Sensor
60	115-8583	1	Bolt-Flange
70	100-2177	1	Cover
80	98-7884	1	Bolt
90	105-2893	1	Washer-Spring
100	139-9541	11	Bolt

Fuel Pump (Mechanical) Assembly

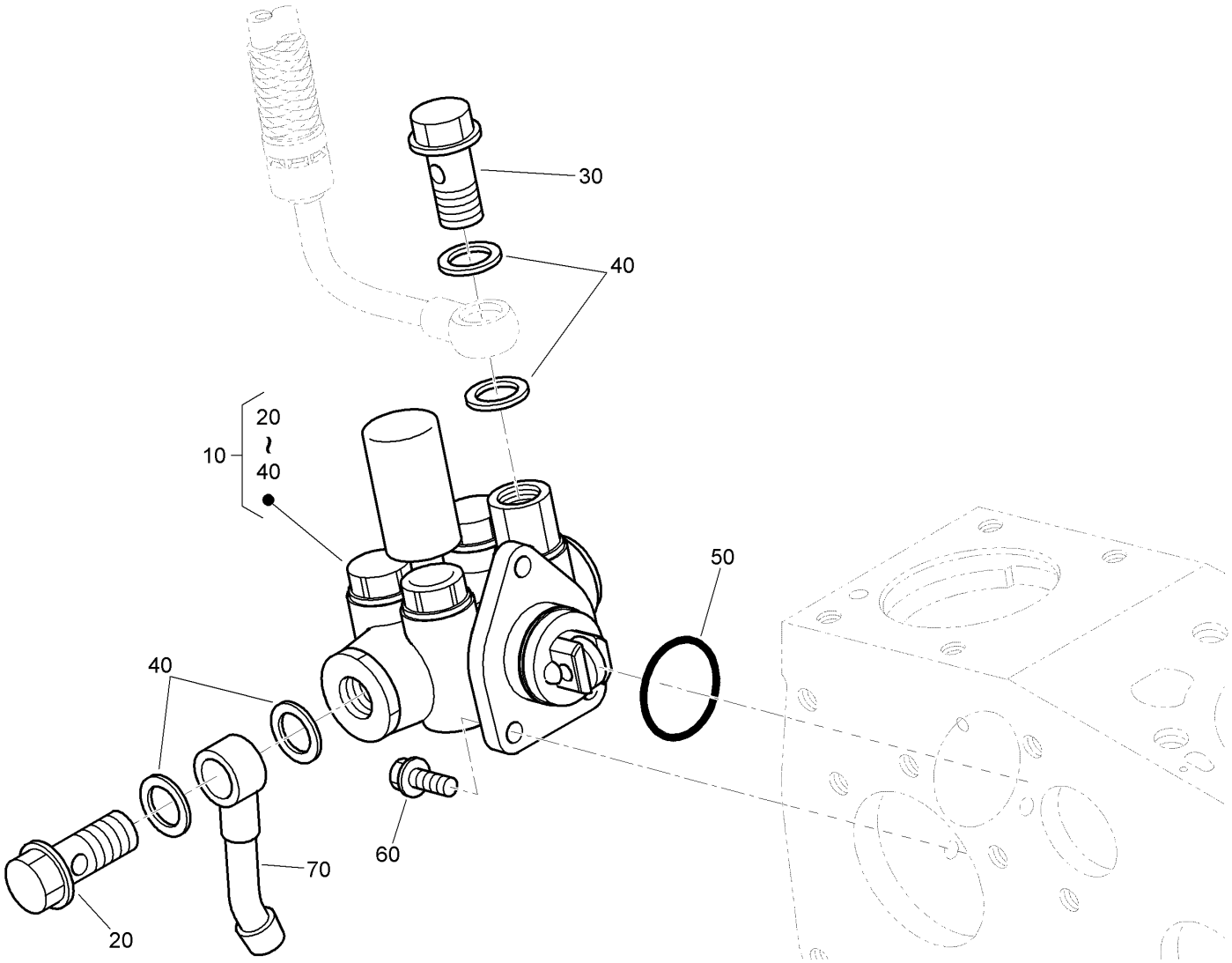

Fuel Pump (Mechanical) Assembly (continued)

Ref.	Part Number	Qty.	Description
10	139-9740	1	Fuel Pump ASM
20	139-9723	1	Bolt-Joint
30	139-9724	1	Bolt-Joint
40	139-9705	4	Gasket-Joint, Pipe
50	139-9581	1	O-Ring
60	127-0403	3	Bolt-Flange
70	139-9530	1	Pipe

Fuel Camshaft Assembly

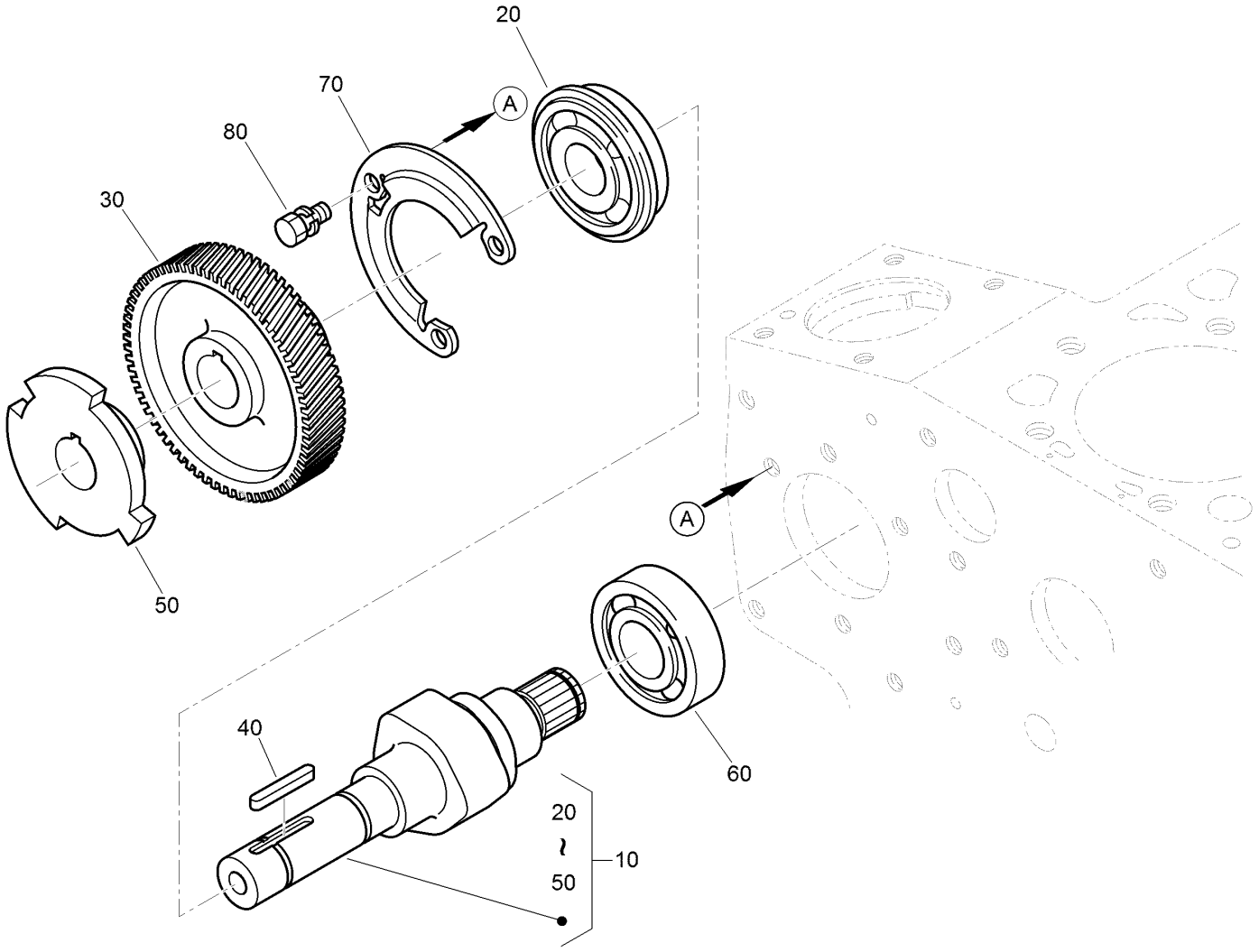

Fuel Camshaft Assembly (continued)

Ref.	Part Number	Qty.	Description
10	139-9762	1	Fuel Camshaft ASM
20	139-9677	1	Bearing-Ball
30	139-9708	1	Gear
40	139-9513	1	Key-Feather
50	139-9732	1	Wheel
60	139-9664	1	Bearing-Ball
70	139-9701	1	Stopper-Camshaft, Fuel
80	AU126123A1	3	Bolt

Supply Pump Assembly

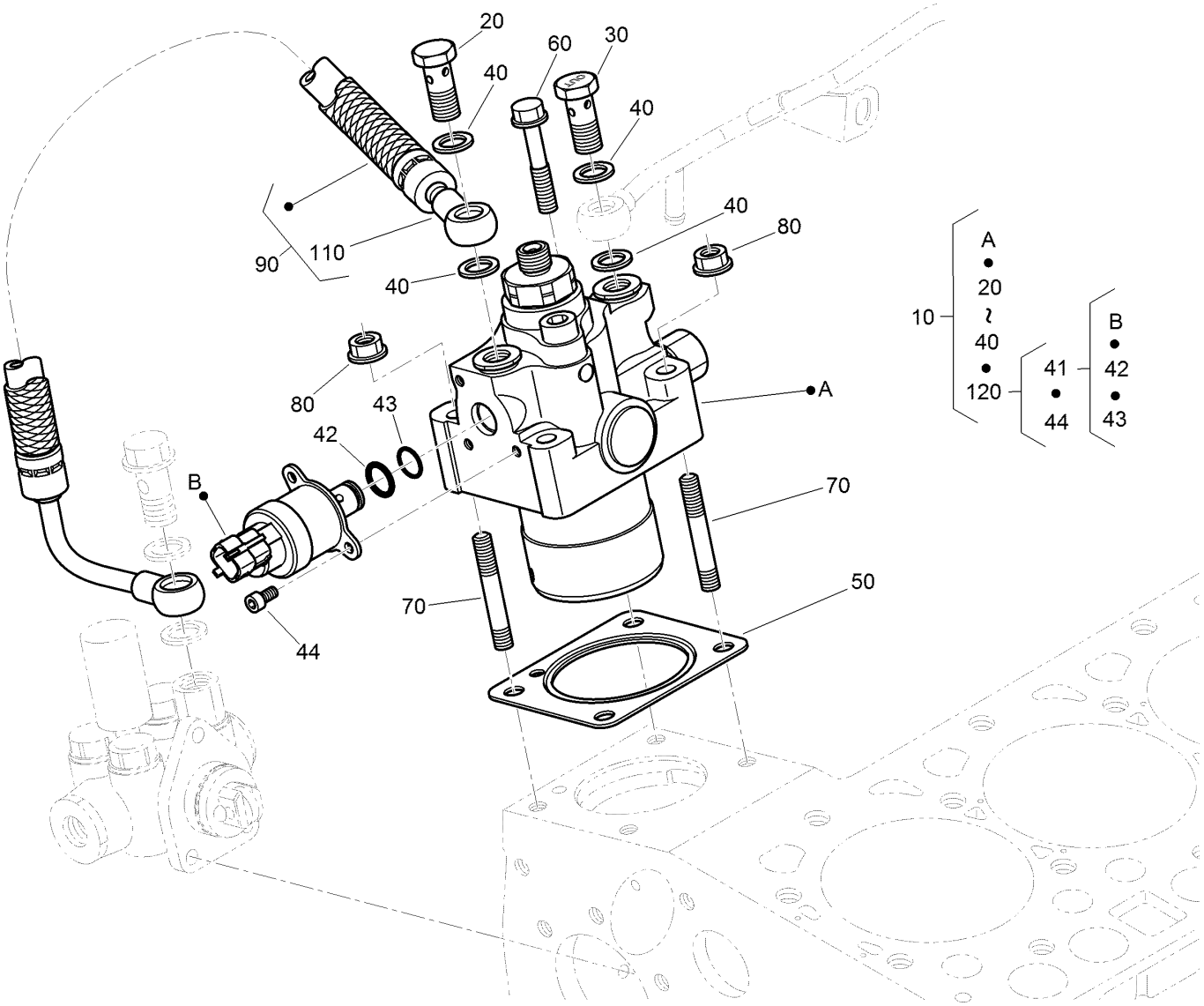

Supply Pump Assembly (continued)

Ref.	Part Number	Qty.	Description
10	139-9738	1	Supply Pump ASM
20	139-9721	1	Bolt-Joint
30	139-9722	1	Bolt-Joint
40	139-9707	4	Gasket
41	139-9739	1	Valve ASM
42	139-9725	1	O-Ring (Scv 1)
43	139-9726	1	O-Ring (Scv 2)
44	139-9718	3	Bolt
50	139-9709	1	Gasket-Pump
60	139-9717	2	Bolt-Flange
70	139-9719	2	Stud
80	112-2492	2	Nut-Flange
90	139-4707	1	Fuel Hose ASM
110	139-9632	1	Fuel Hose
120	139-9745	1	Valve Kit

Fuel Filter Assembly

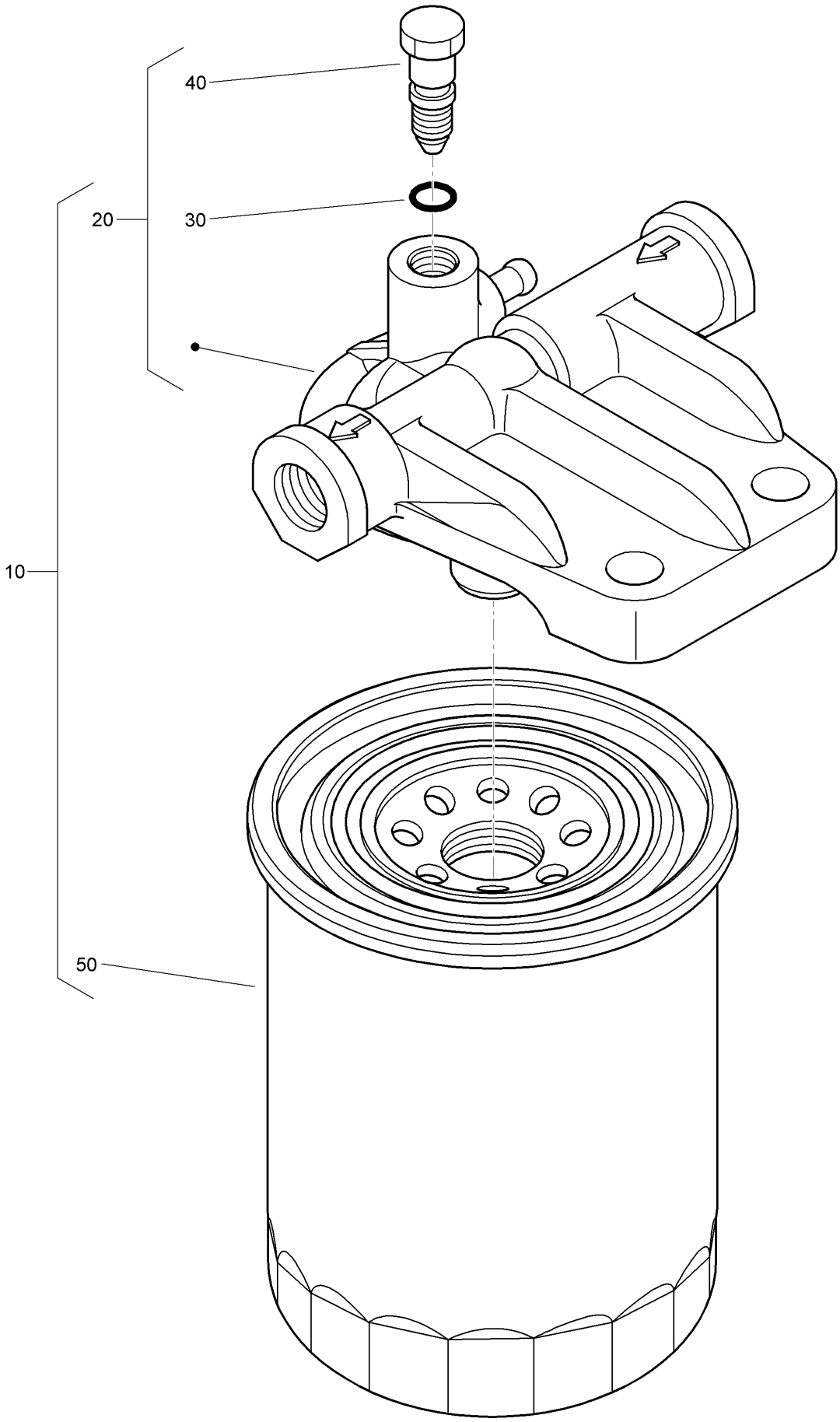

Fuel Filter Assembly (continued)

Ref.	Part Number	Qty.	Description
10	136-4733	1	Filter-Fuel
20	139-9703	1	Base-Filter
30	139-9706	1	O-Ring
40	139-4720	1	Plug
50	136-4891	1	Cartridge-Filter, Fuel

Separator Assembly

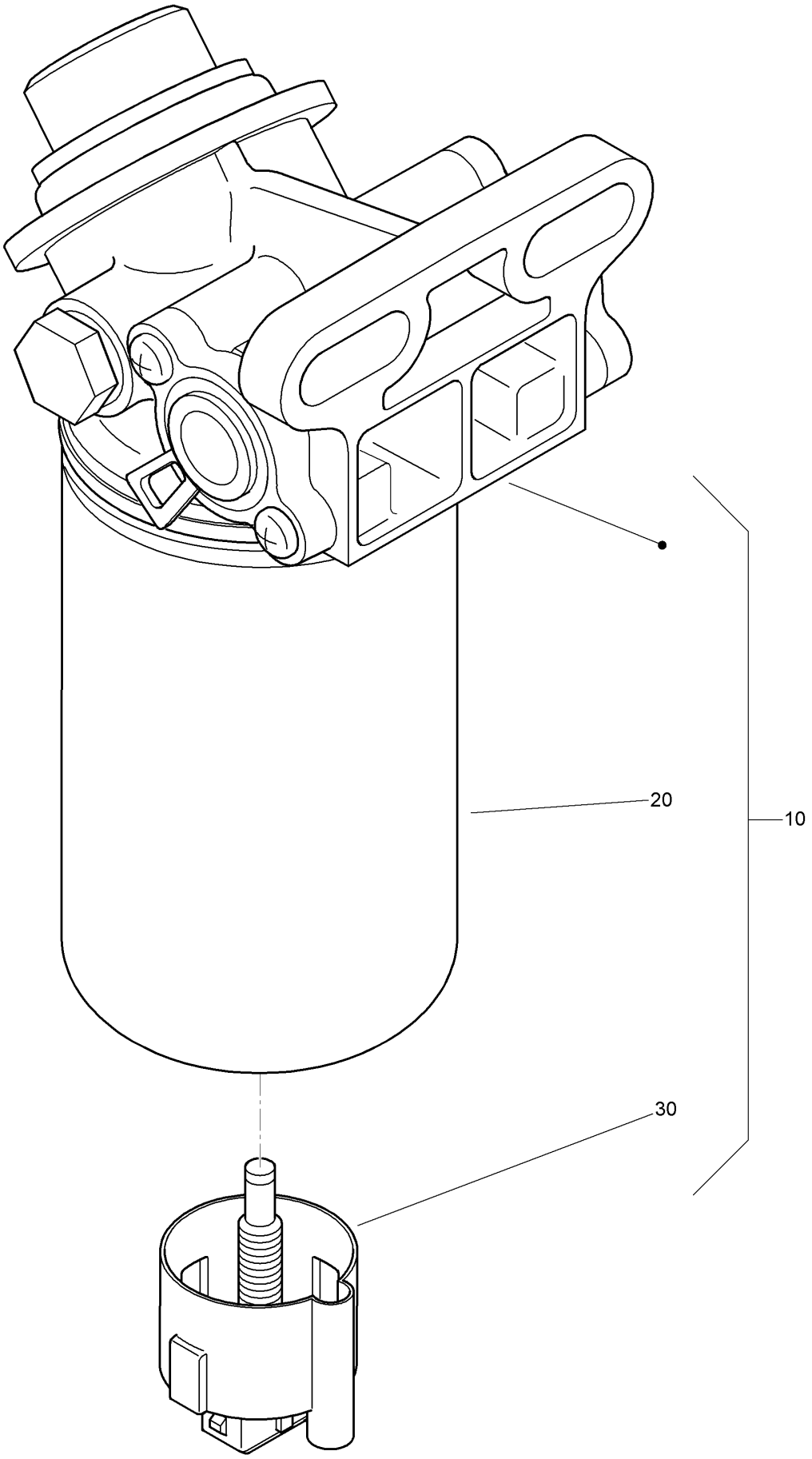

Separator Assembly (continued)

Ref.	Part Number	Qty.	Description
10	136-4734	1	Filter-Seperator, Water
20	136-4892	1	Filter-Separator
30	139-9684	1	Switch ASM

Injector and Glow Plug Assembly

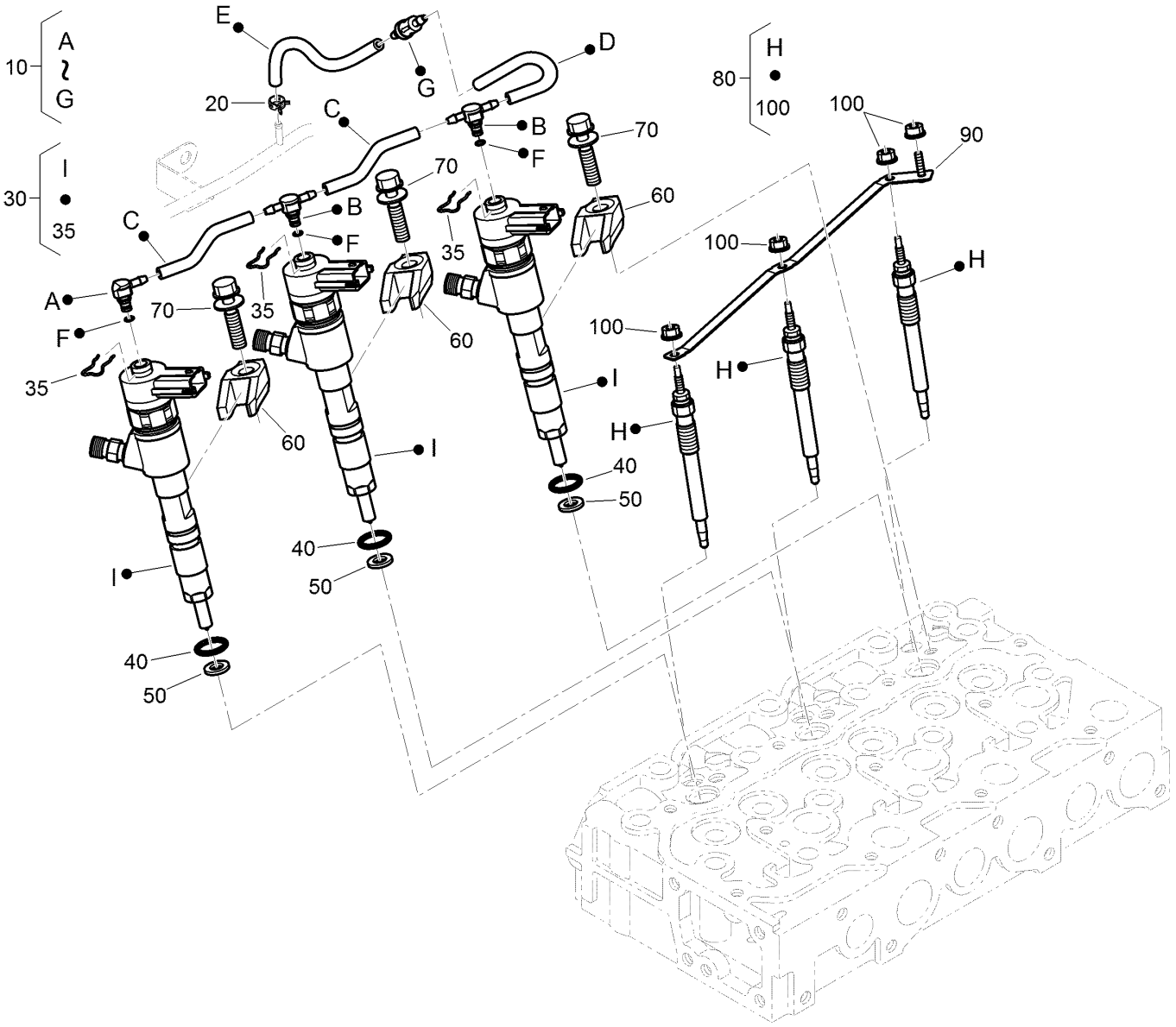

Injector and Glow Plug Assembly (continued)

Ref.	Part Number	Qty.	Description
10	139-9764	1	Over Flow Tube ASM
20	139-9514	1	Clamp-Hose
30	139-4700	3	Injector ASM
35	139-9702	3	Clamp
40	139-9712	3	O-Ring
50	139-9651	3	Packing
60	139-9710	3	Clamp
70	139-9711	3	Bolt ASM
80	139-9662	3	Plug-Glow
90	139-9769	1	Cord-Plug, Glow
100	99-8377	4	Nut-Flange

Injection Pipe Assembly

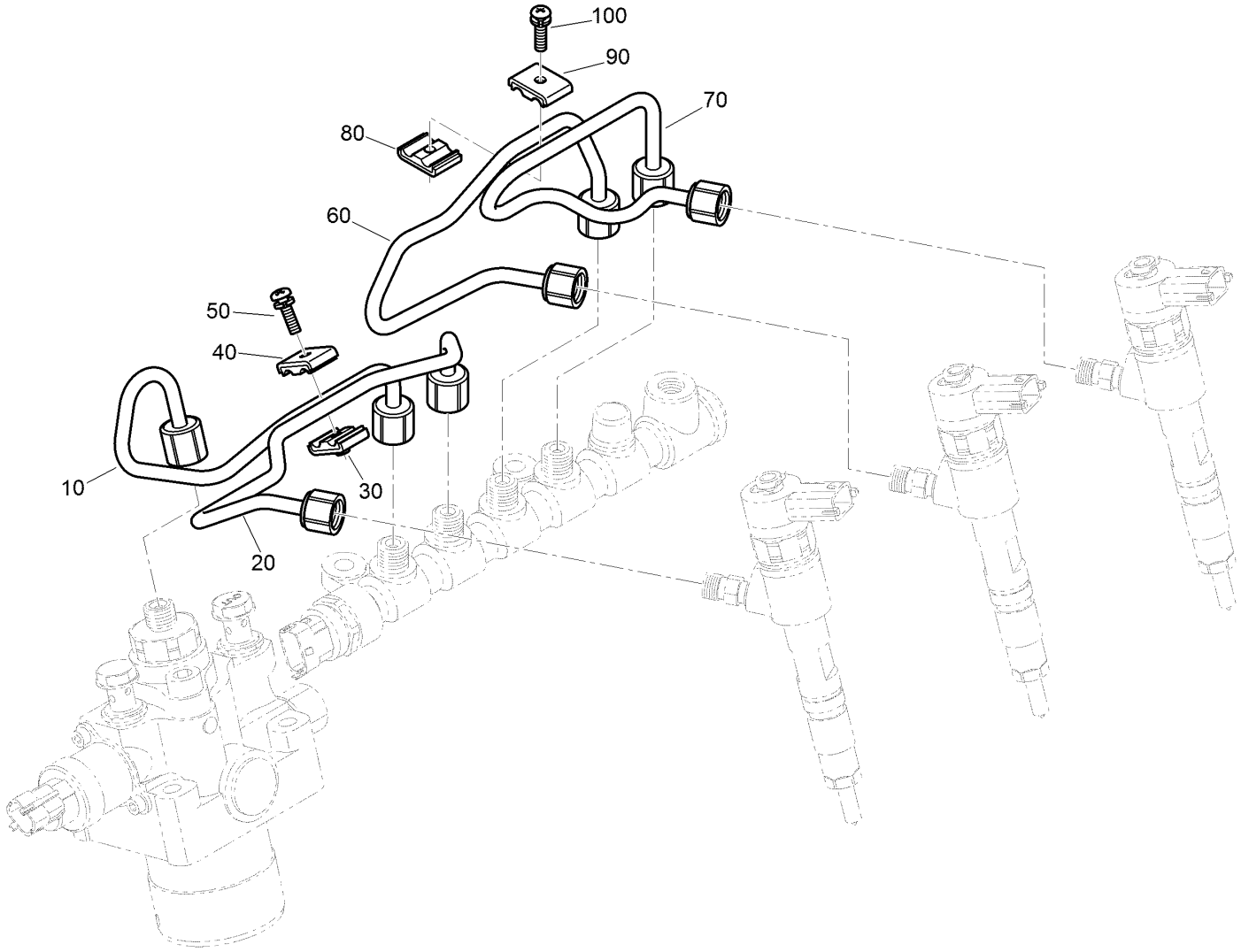

Injection Pipe Assembly (continued)

Ref.	Part Number	Qty.	Description
10	139-9741	1	Pipe
20	139-9713	1	Pipe-Injection
30	139-9535	1	Clamp-Pipe
40	139-9536	1	Clamp-Pipe
50	98-7684	1	Screw (W/Washer)

Ref.	Part Number	Qty.	Description
60	139-9714	1	Pipe-Injection
70	139-9715	1	Pipe-Injection
80	139-9535	1	Clamp-Pipe
90	139-9536	1	Clamp-Pipe
100	98-7684	1	Screw (W/Washer)

Fuel Pump (Electrical) Assembly

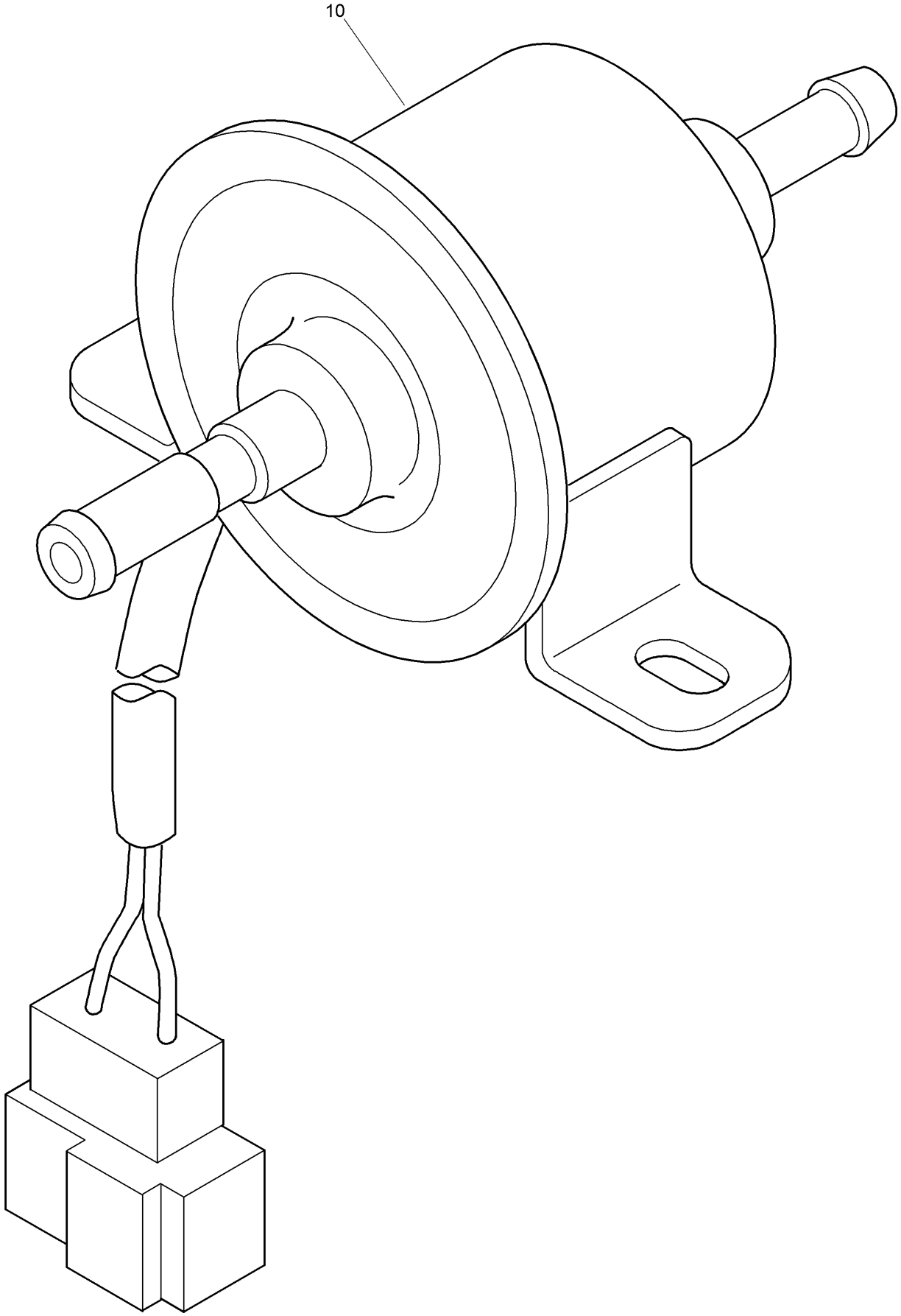

Fuel Pump (Electrical) Assembly (continued)

Ref.	Part Number	Qty.	Description
10	139-9642	1	Assy Pump,Fuel

Common Rail Assembly

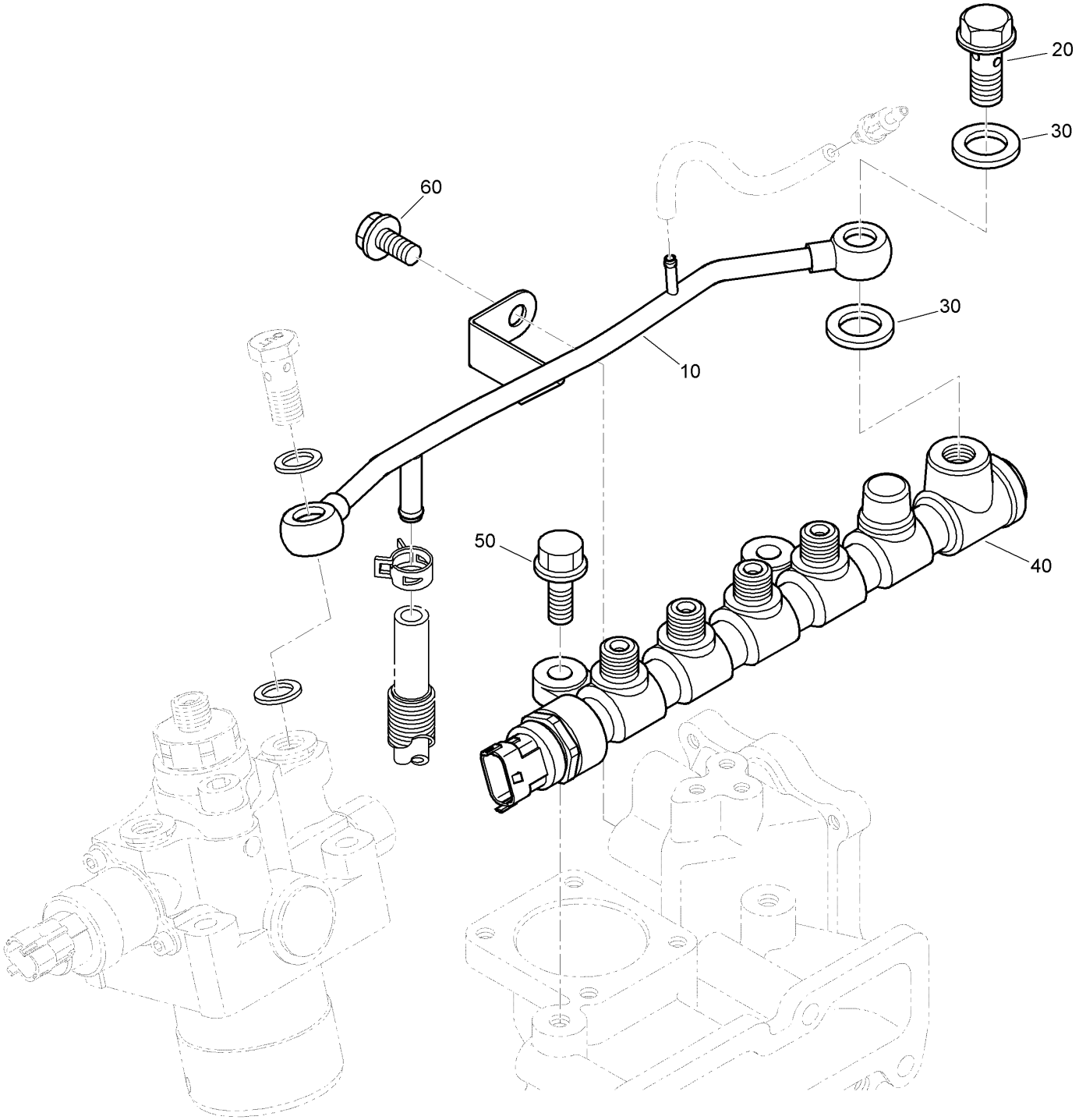

Common Rail Assembly (continued)

Ref.	Part Number	Qty.	Description
10	139-9765	1	Pipe-Over Flow, Water
20	139-9720	1	Bolt-Joint
30	139-9707	2	Gasket
40	139-9766	1	Rail ASM
50	139-9502	2	Bolt-Flange
60	130-1159	1	Bolt-Flange

Alternator and Pulley Assembly

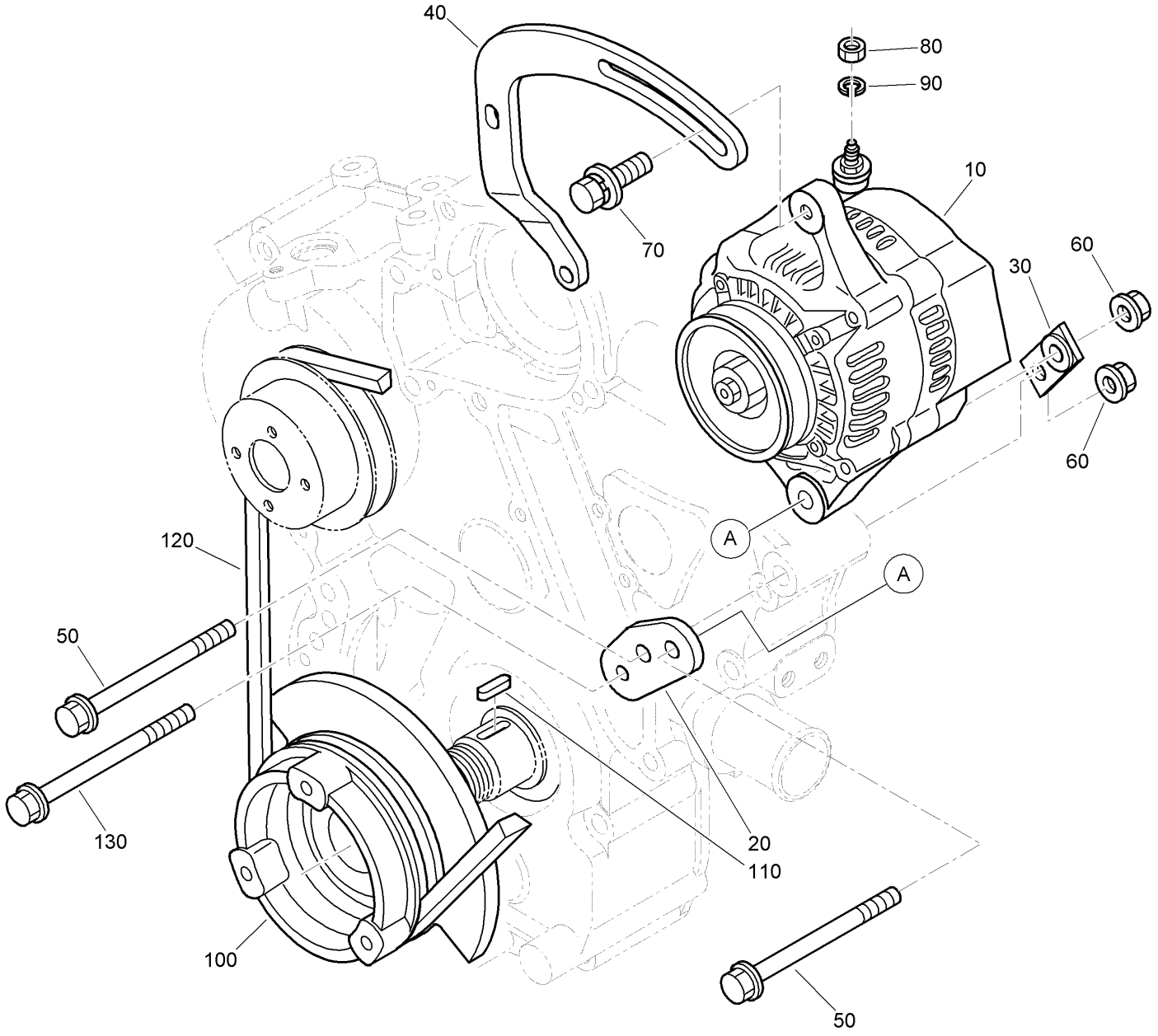

Alternator and Pulley Assembly (continued)

Ref.	Part Number	Qty.	Description
10	139-9582	1	Alternator ASM
20	139-9630	1	Support-Alternator
30	139-9683	1	Stay-Alternator
40	139-9631	1	Stay-Dynamo
50	139-9506	2	Bolt-Flange
60	120-5822	2	Nut-Flange
70	108-7088	1	Bolt
80	98-7572	1	Nut
90	98-7699	1	Washer-Spring
100	139-9657	1	Pulley-Drive, Fan
110	98-7451	1	Key-Feather
120	139-9635	1	Belt-Fan
130	139-9504	1	Bolt-Flange

Alternator Components Assembly

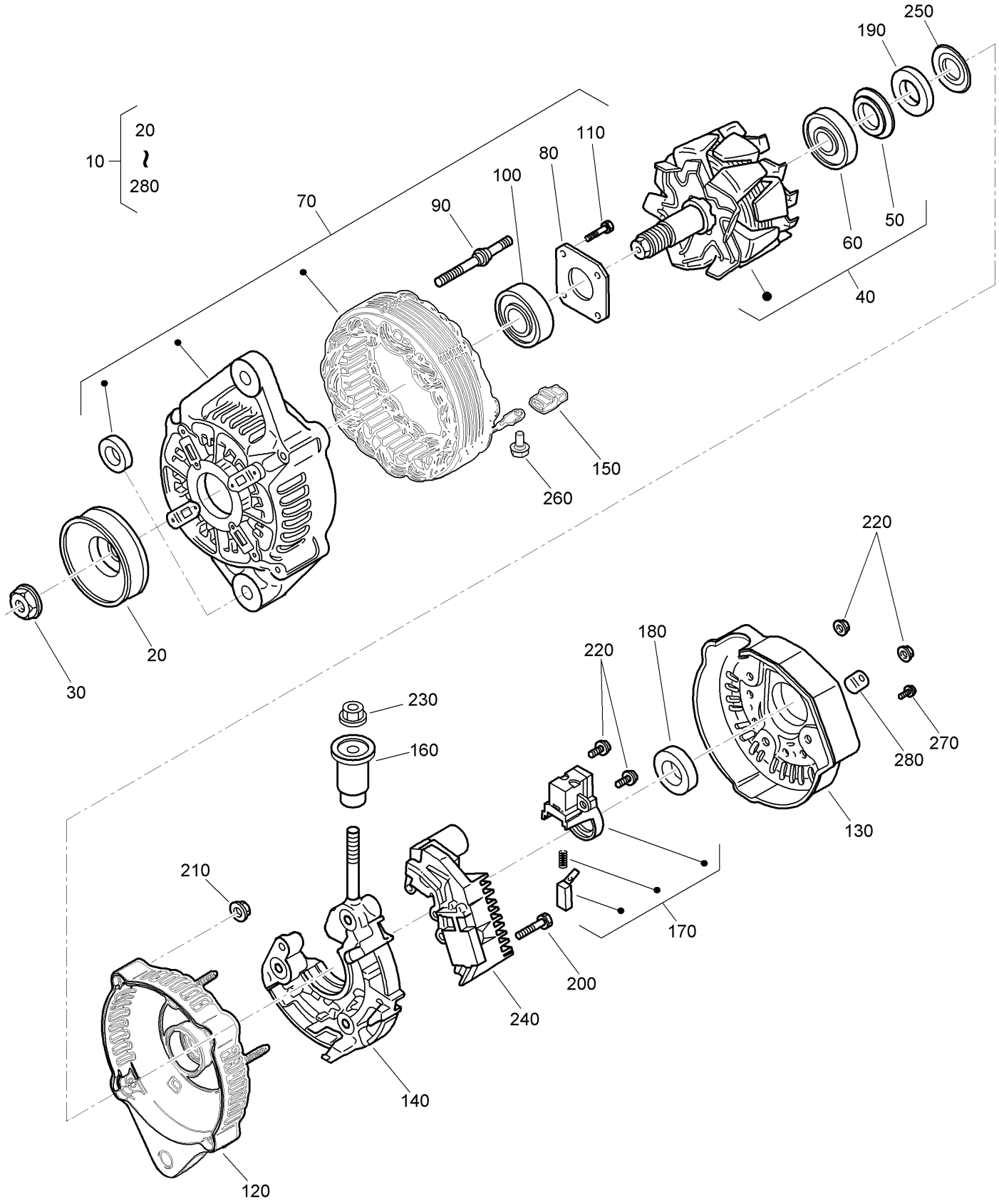

Alternator Components Assembly (continued)

Ref.	Part Number	Qty.	Description
10	139-9582	1	Alternator ASM
20	139-9584	1	Pulley-Alternator
30	139-9545	1	Nut
40	139-9585	1	Rotor ASM
50	139-9537	1	Cover-Bearing
60	139-4715	1	Bearing-Ball
70	139-9583	1	Drive End Frame ASM
80	139-9550	1	Plate-Retainer
90	139-9544	4	Bolt-Through
100	139-9551	1	Bearing-Ball
110	139-9557	4	Bolt
120	139-9546	1	Frame-End
130	139-9586	1	Cover-End, Rear
140	139-9587	1	Rectifier ASM
150	139-9552	4	Bushing-Insulation
160	139-9588	1	Bushing-Insulation
170	139-9547	1	Holder-Brush
180	139-9548	1	Ring-Seal
190	139-9549	1	Ring-Seal
200	139-9556	2	Screw-Head, Round
210	139-9538	7	Nut
220	139-9539	3	Screw-Head, Round
230	139-9555	1	Nut
240	139-9589	1	Regulator ASM
250	139-9554	1	Washer
260	139-9558	4	Screw-Head, Round
270	139-9559	1	Screw-Head, Round
280	139-9553	1	Plate-Terminal

Starter Installation Assembly

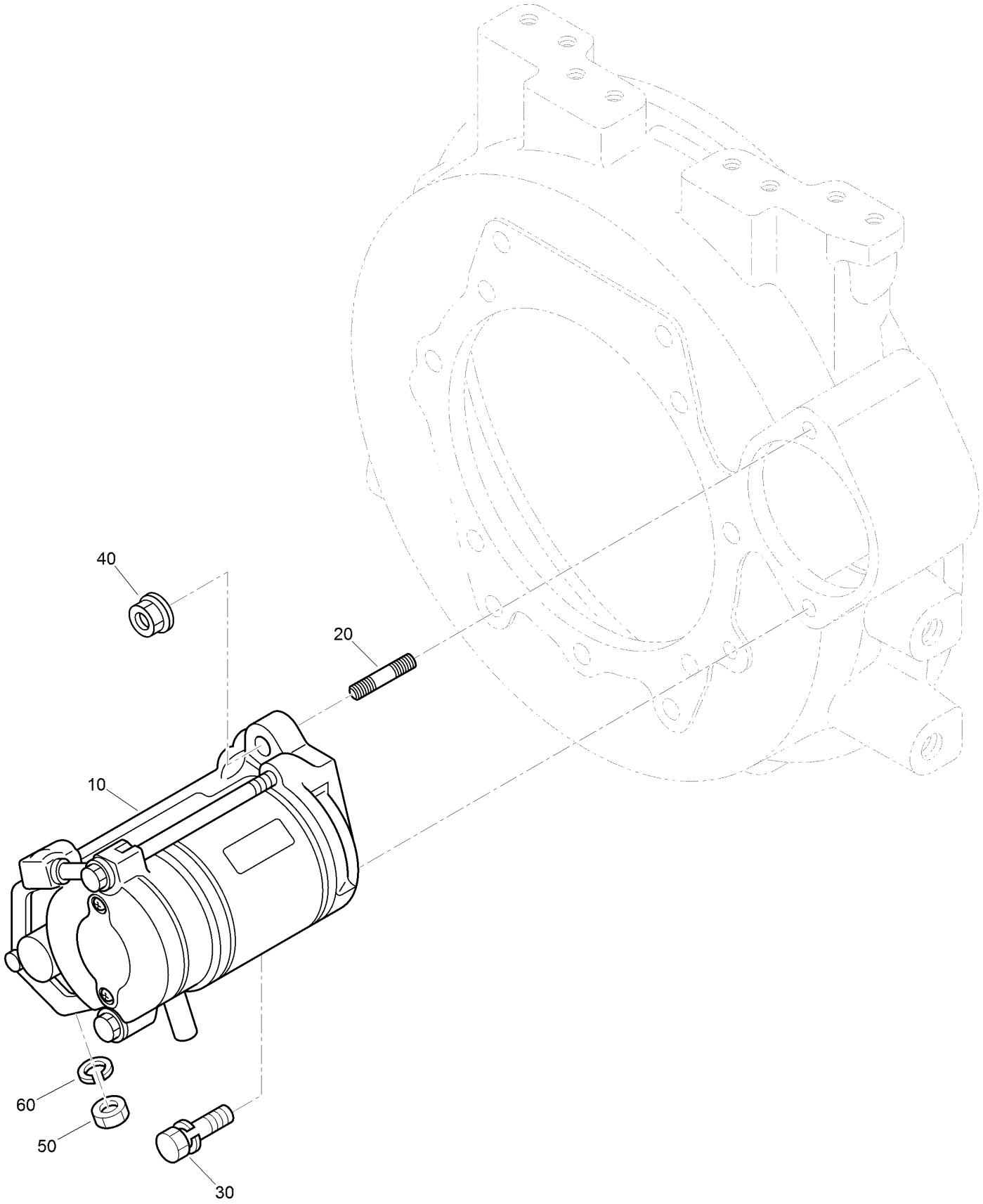

Starter Installation Assembly (continued)

Ref.	Part Number	Qty.	Description
10	130-1306	1	Starter ASM
20	139-9501	1	Bolt-Stud
30	98-7736	1	Bolt
40	120-5822	1	Nut-Flange
50	98-7739	1	Nut
60	105-2893	1	Washer-Spring

Starter (Component Parts) Assembly

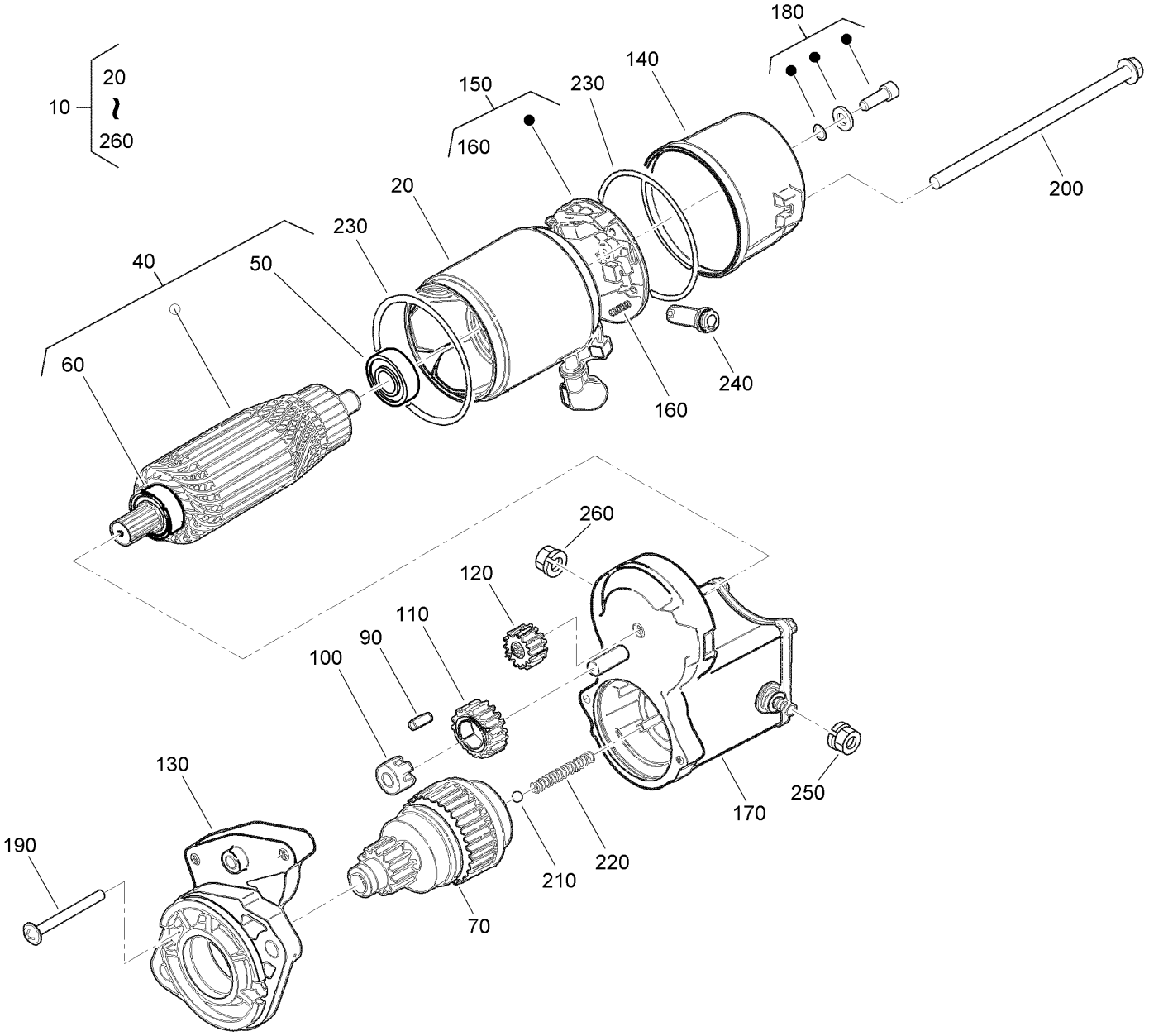

Starter (Component Parts) Assembly (continued)

Ref.	Part Number	Qty.	Description
10	130-1306	1	Starter ASM
20	139-9566	1	Yoke
40	139-9565	1	Armature
50	139-9572	1	Bearing
60	139-9520	1	Bearing
70	139-9564	1	Clutch-Running, Over
90	98-7753	5	Roller
100	139-9517	1	Retainer
110	139-9519	1	Gear
120	139-9569	1	Gear
130	139-9563	1	Frame-End, Drive
140	139-9568	1	Frame-End
150	139-9571	1	Holder-Brush
160	139-9567	4	Spring
170	130-1307	1	Magnetic Switch ASM
180	139-9573	2	Screw
190	139-9574	2	Screw
200	139-9570	2	Bolt-Through
210	98-7755	1	Ball
220	139-9518	1	Spring
230	139-9532	2	O-Ring
240	139-9540	1	Pipe-Drain
250	139-9521	1	Nut-Hexagon
260	99-8376	1	Nut-Hex

Oil Switch and Thermometer Assembly

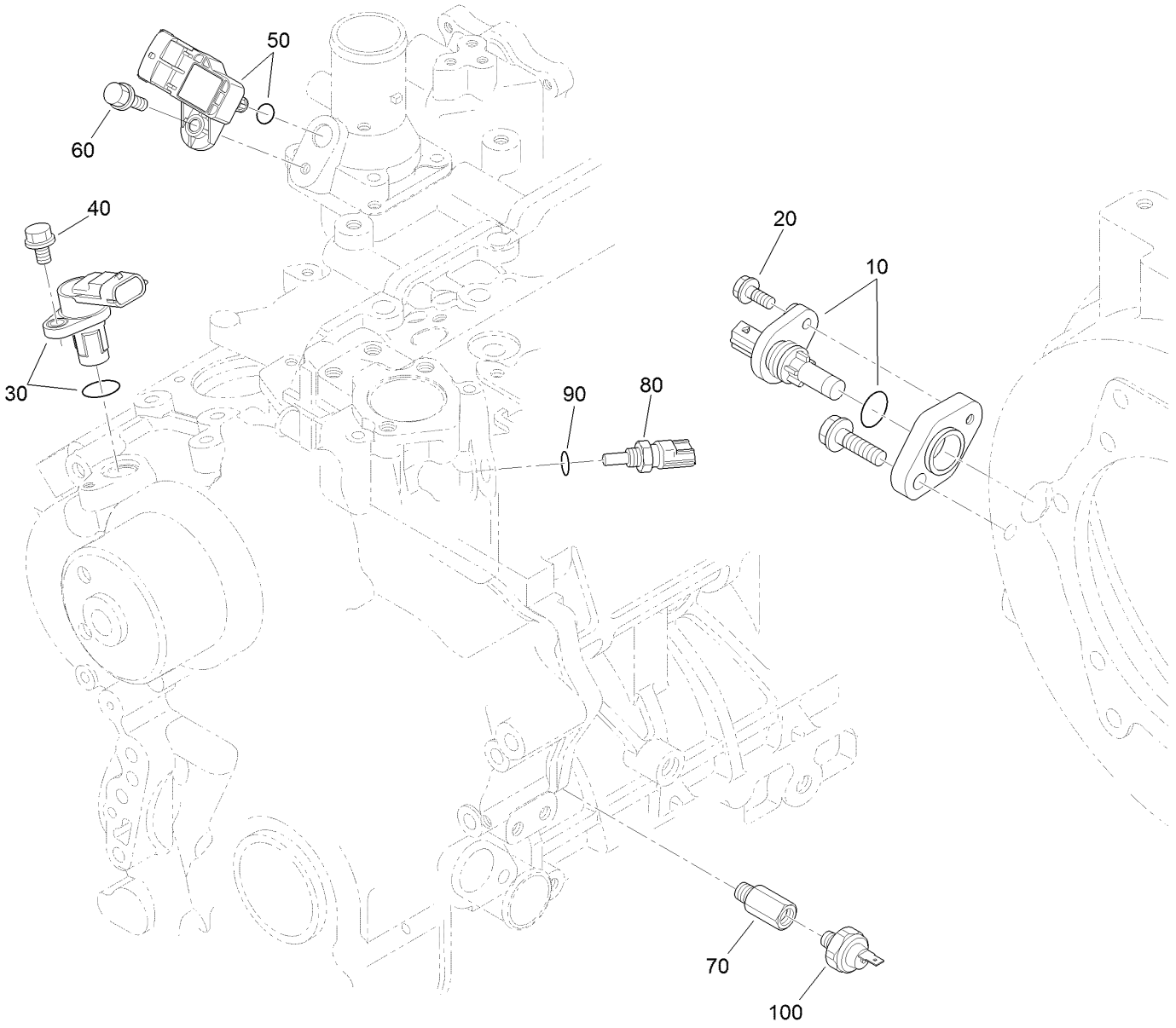

Oil Switch and Thermometer Assembly (continued)

Ref.	Part Number	Qty.	Description
10	139-9716	1	Sensor
20	127-0403	1	Bolt-Flange
30	139-9742	1	Sensor
40	127-0403	1	Bolt-Flange
50	139-9752	1	Sensor-Boost
60	108-2873	1	Bolt-Flange
70	139-9685	1	Adapter-Switch, Oil
80	139-4717	1	Sensor-Temperature, Water
90	139-9512	1	O-Ring
100	139-4719	1	Switch-Oil

Injector Harness Assembly

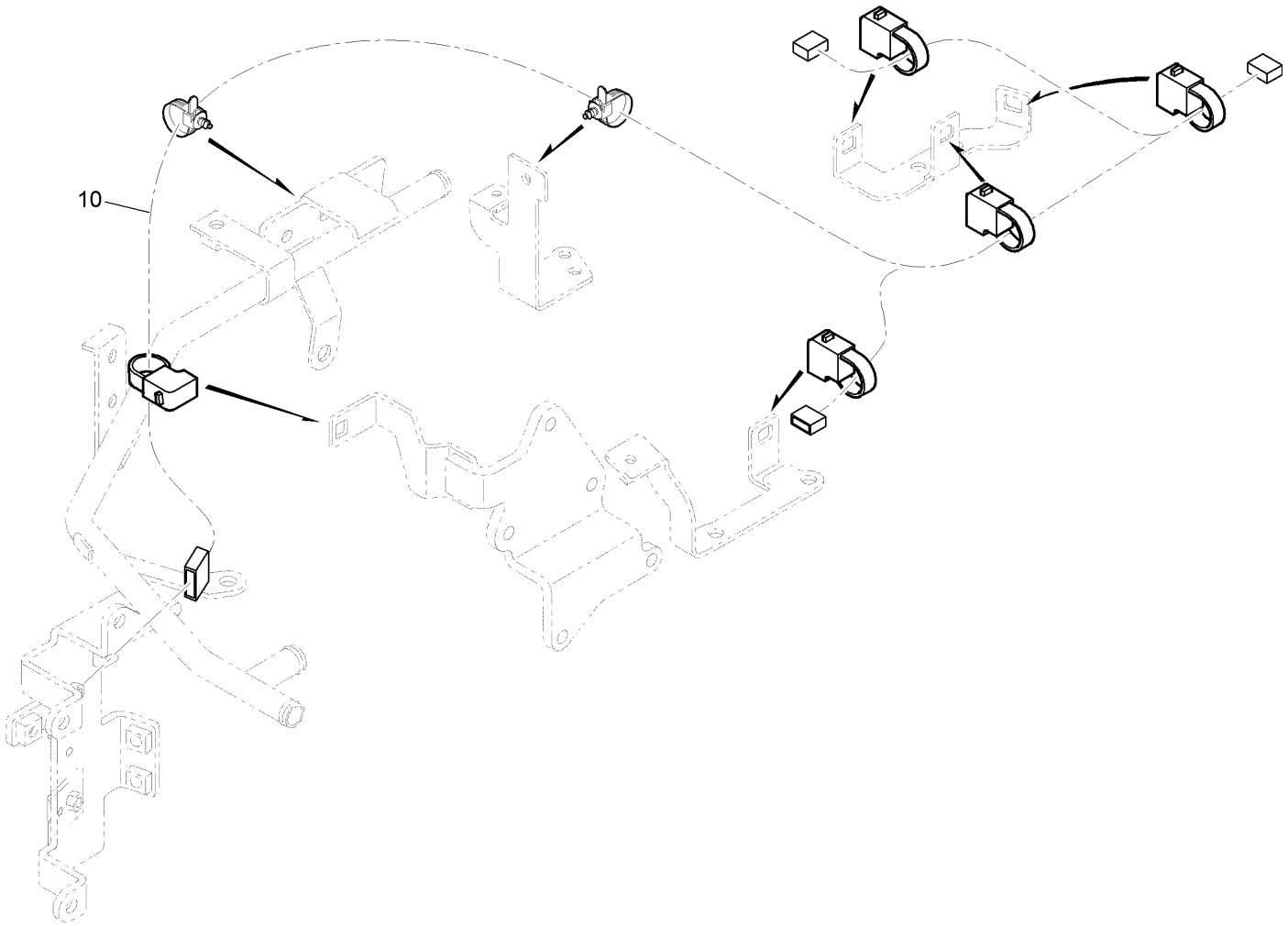

Injector Harness Assembly (continued)

Ref.	Part Number	Qty.	Description
10	139-9767	1	Wire Harness ASM

Wire Harness Assembly

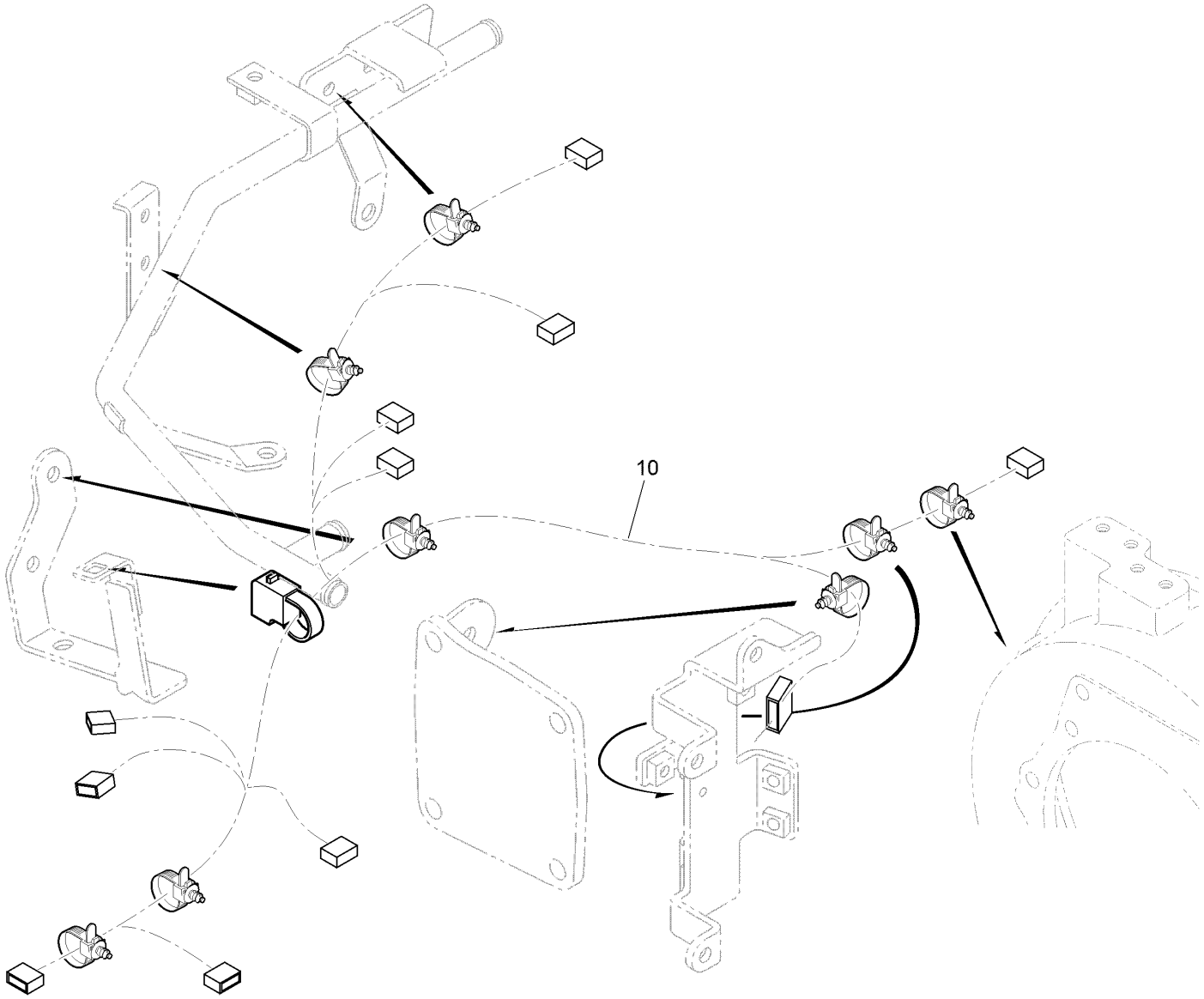

Wire Harness Assembly (continued)

Ref.	Part Number	Qty.	Description
10	139-9790	1	Engine Wire Harness ASM

Wire Harness Bracket Assembly

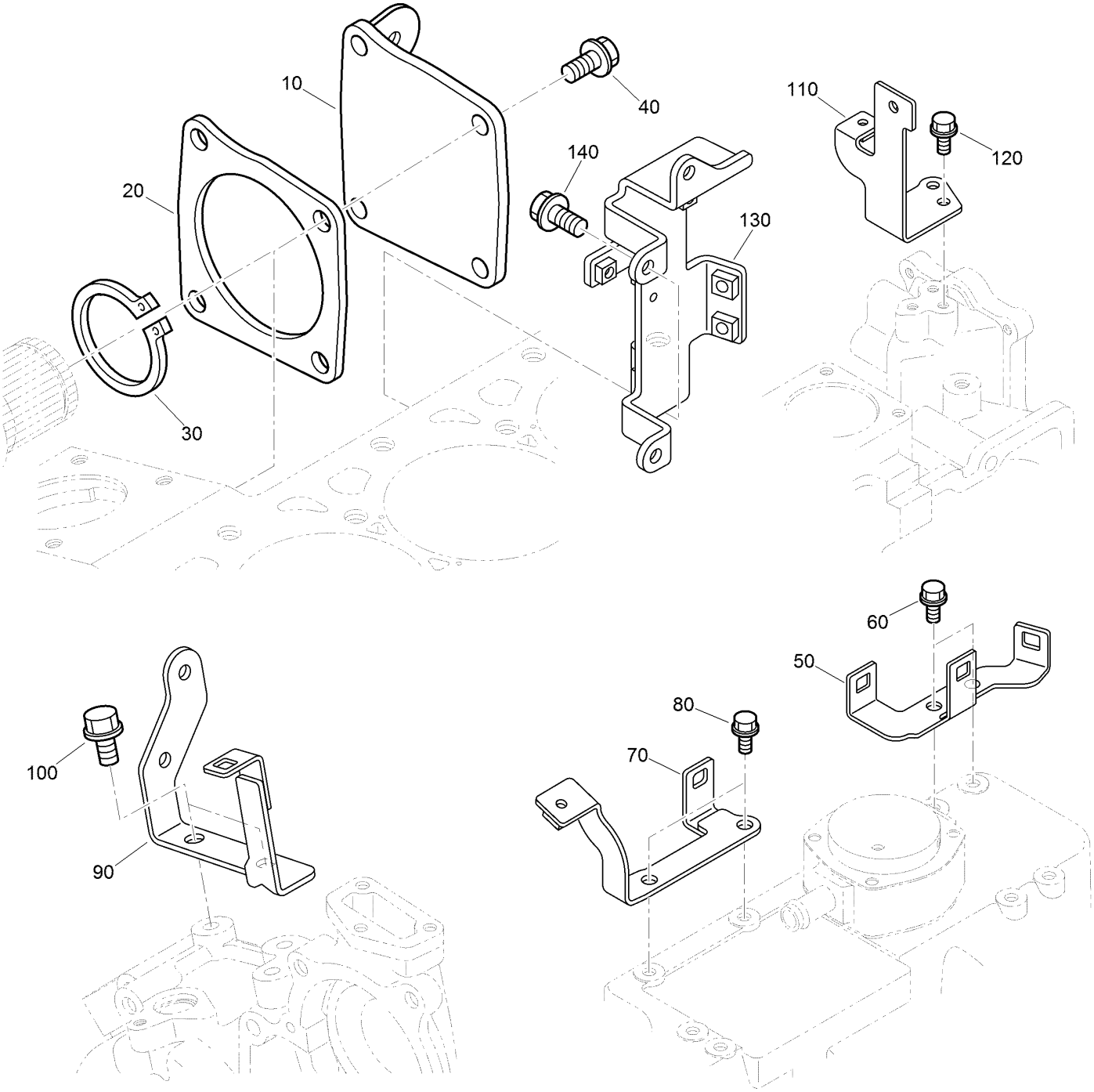

Wire Harness Bracket Assembly (continued)

Ref.	Part Number	Qty.	Description
10	139-9731	1	Cover-Camshaft, Fuel
20	139-9637	1	Gasket
30	120-5194	1	Circlip-External
40	130-1159	4	Bolt-Flange
50	139-9791	1	Bracket-Harness
60	139-9505	2	Bolt-Flange
70	139-4701	1	Bracket (Wh 2)
80	139-9505	2	Bolt-Flange
90	139-4702	1	Bracket (Wh 3)
100	130-1159	2	Bolt-Flange
110	139-9792	1	Bracket (Wh 4)
120	139-9505	2	Bolt-Flange
130	139-9768	1	Bracket-Connector
140	130-1159	3	Bolt-Flange

Water Flange and Thermostat Assembly

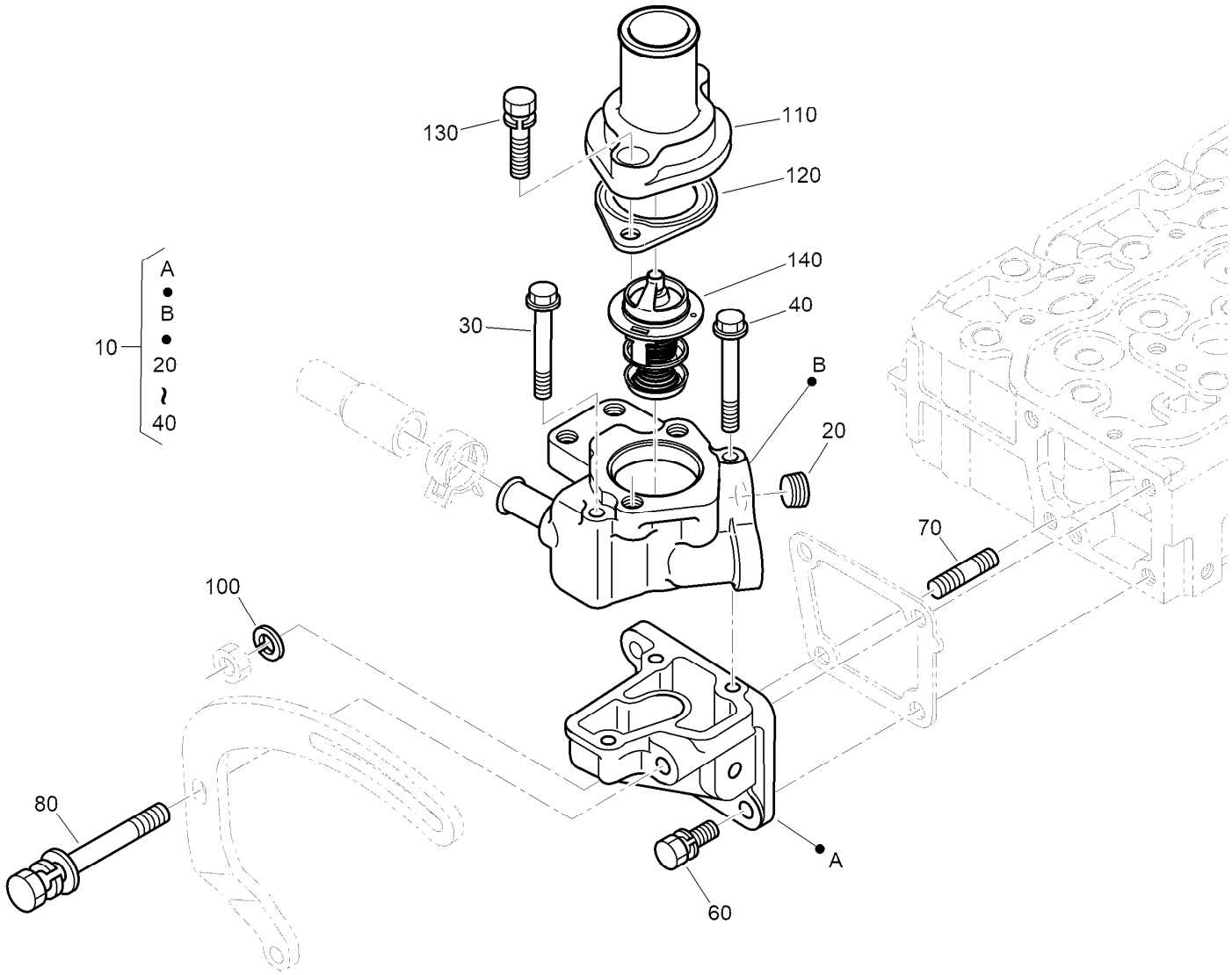

Water Flange and Thermostat Assembly (continued)

Ref.	Part Number	Qty.	Description
10	130-1347	1	Water Flange ASM
20	139-9603	1	Plug
30	105-2875	2	Bolt-Flange
40	107-0117	1	Bolt-Flange
60	98-9359	2	Bolt
70	100-1558	1	Stud-Manifold, Exhaust
80	139-9601	1	Bolt
100	105-2893	1	Washer-Spring
110	98-7775	1	Cover-Thermostat
120	105-3748	1	Gasket-Thermostat
130	98-7777	2	Bolt
140	139-9678	1	Thermostat ASM

Water Pipe Assembly

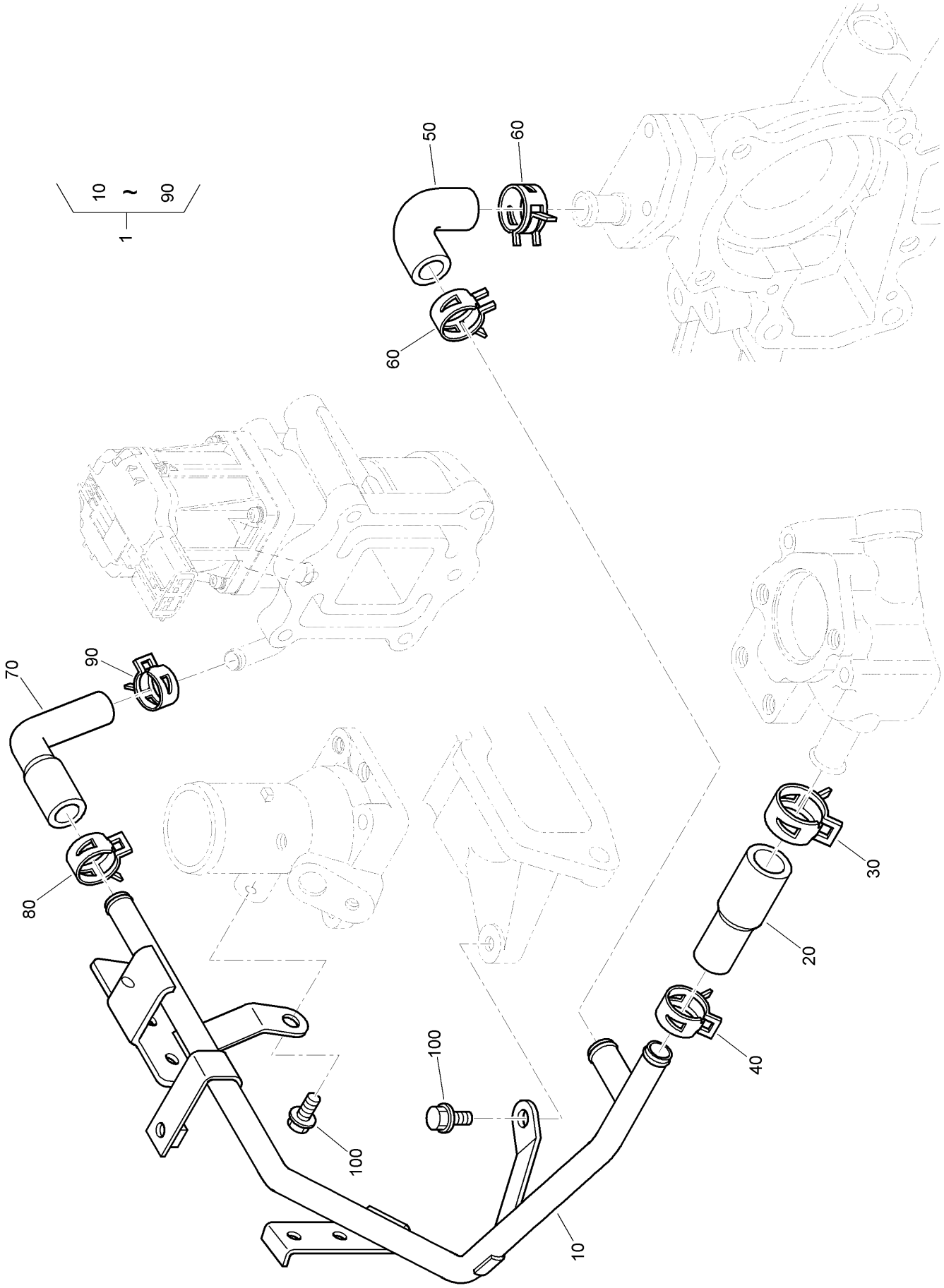

Water Pipe Assembly (continued)

Ref.	Part Number	Qty.	Description
1	139-9795	1	Water Return Pipe ASM
10	139-4704	1	Pipe-Return, Water 2
20	139-9754	1	Hose-Return, Water 2-1
30	139-9591	1	Clamp-Hose
40	115-8524	1	Clamp-Hose
50	139-9755	1	Hose-Return, Water 2-2
60	105-2879	2	Clamp-Hose
70	139-9771	1	Hose
80	115-8524	1	Clamp-Hose
90	139-9515	1	Clamp-Hose
100	100-1774	2	Bolt-Flange

Water Pump Assembly

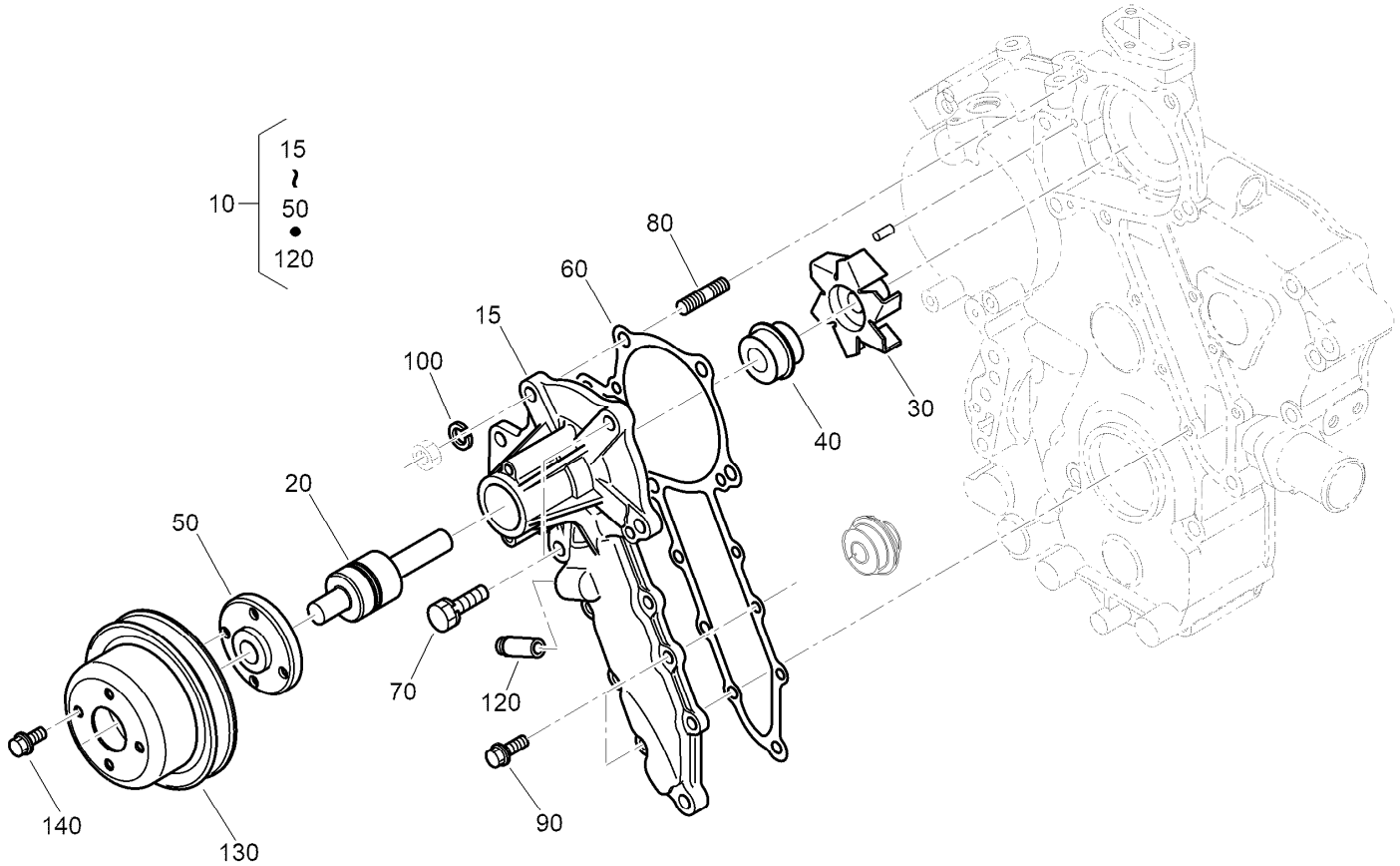

Water Pump Assembly (continued)

Ref.	Part Number	Qty.	Description
10	139-9636	1	Water Pump ASM
15	130-1421	1	Body-Pump, Water
20	139-9560	1	Bearing
30	139-9599	1	Impeller
40	139-9640	1	Mechanical Seal ASM
50	108-7089	1	Flange-Shaft, Water Pump
60	139-9605	1	Gasket-Pump, Water
70	98-7439	2	Bolt
80	108-7090	1	Stud
90	127-0403	6	Bolt-Flange
100	105-2893	1	Washer-Spring
120	98-9580	1	Pipe-Return, Water
130	139-9579	1	Pulley-Fan
140	100-1774	4	Bolt-Flange

Inlet Manifold Assembly

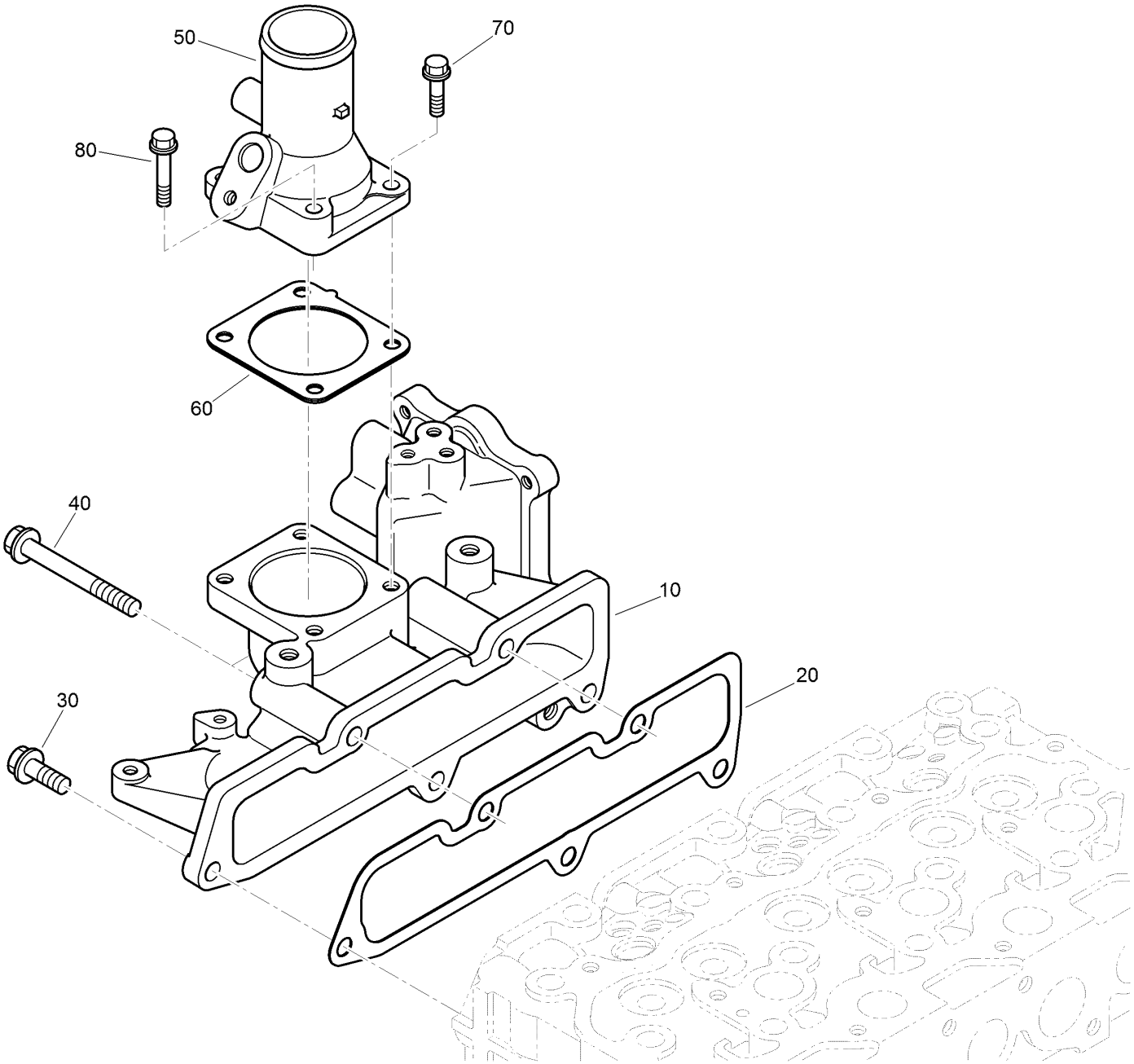

Inlet Manifold Assembly (continued)

Ref.	Part Number	Qty.	Description
10	139-9758	1	Manifold-Inlet
20	139-9759	1	Gasket-Manifold, Inlet
30	115-8583	3	Bolt-Flange
40	139-9503	2	Bolt-Flange
50	139-9749	1	Flange-Inlet
60	139-9700	1	Gasket-Flange, Inlet
70	108-2873	3	Bolt-Flange
80	127-0404	1	Bolt-Flange

Inlet Hose Assembly

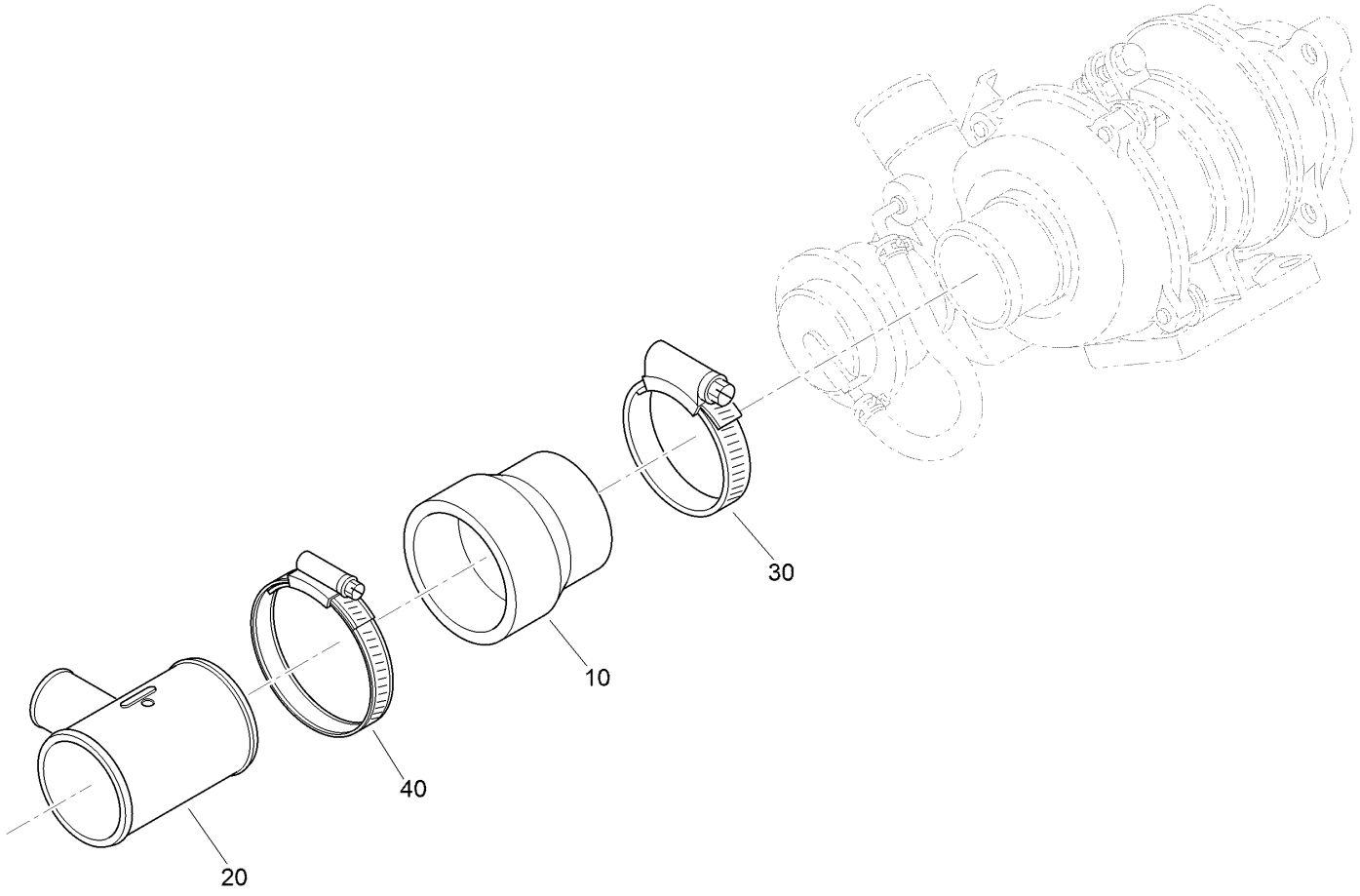

Inlet Hose Assembly (continued)

Ref.	Part Number	Qty.	Description
10	139-9746	1	Tube-Inlet, Turbo
20	139-9649	1	Pipe-Breather
30	139-4716	1	Clamp
40	139-4718	1	Clamp-Hose

Exhaust Manifold Assembly

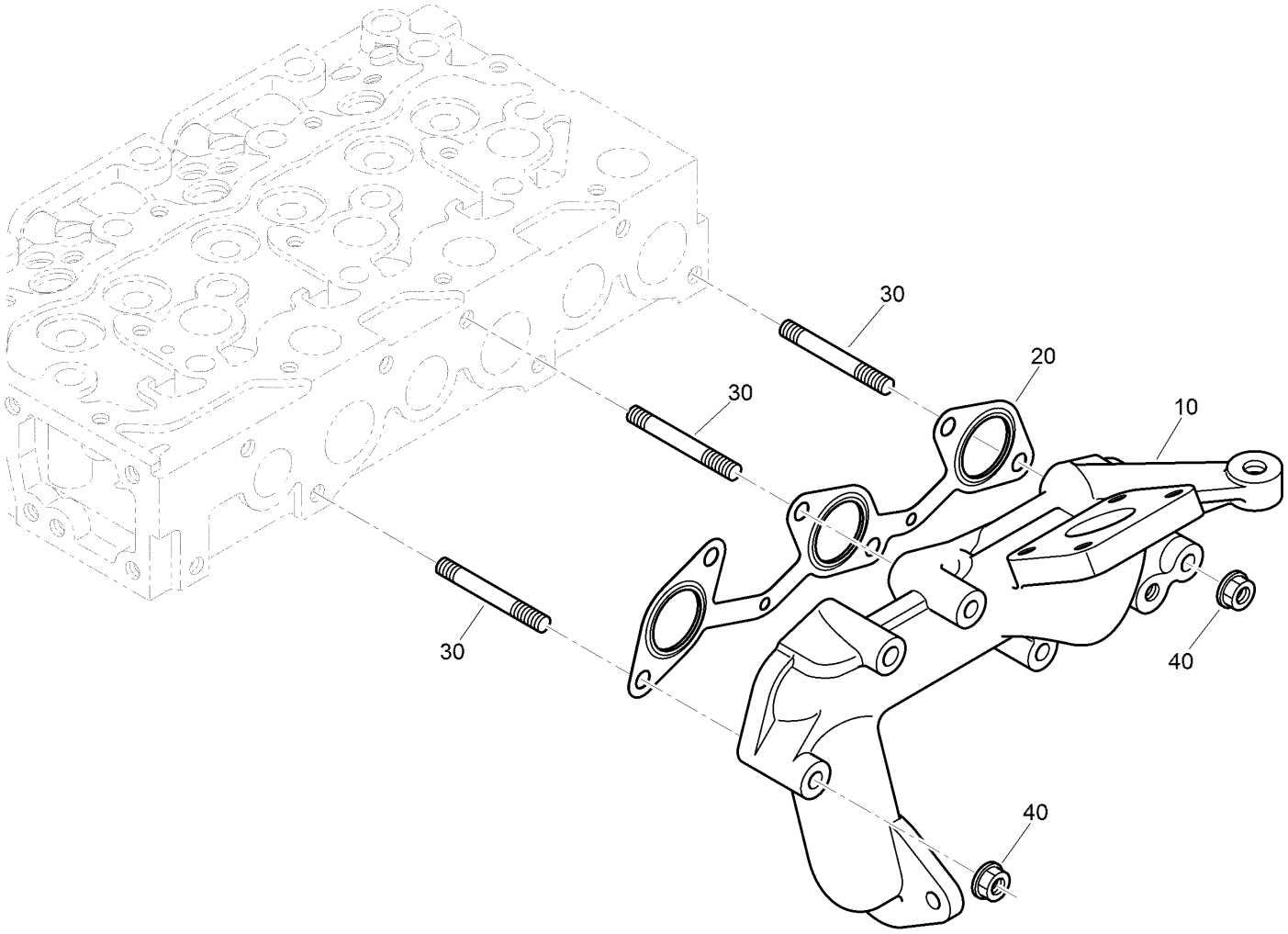

Exhaust Manifold Assembly (continued)

Ref.	Part Number	Qty.	Description
10	139-9773	1	Manifold-Exhaust
20	139-9760	1	Gasket-Manifold, Exhaust
30	139-9744	6	Stud
40	139-9691	6	Nut-Flange

Exhaust Gas Recirculation Assembly

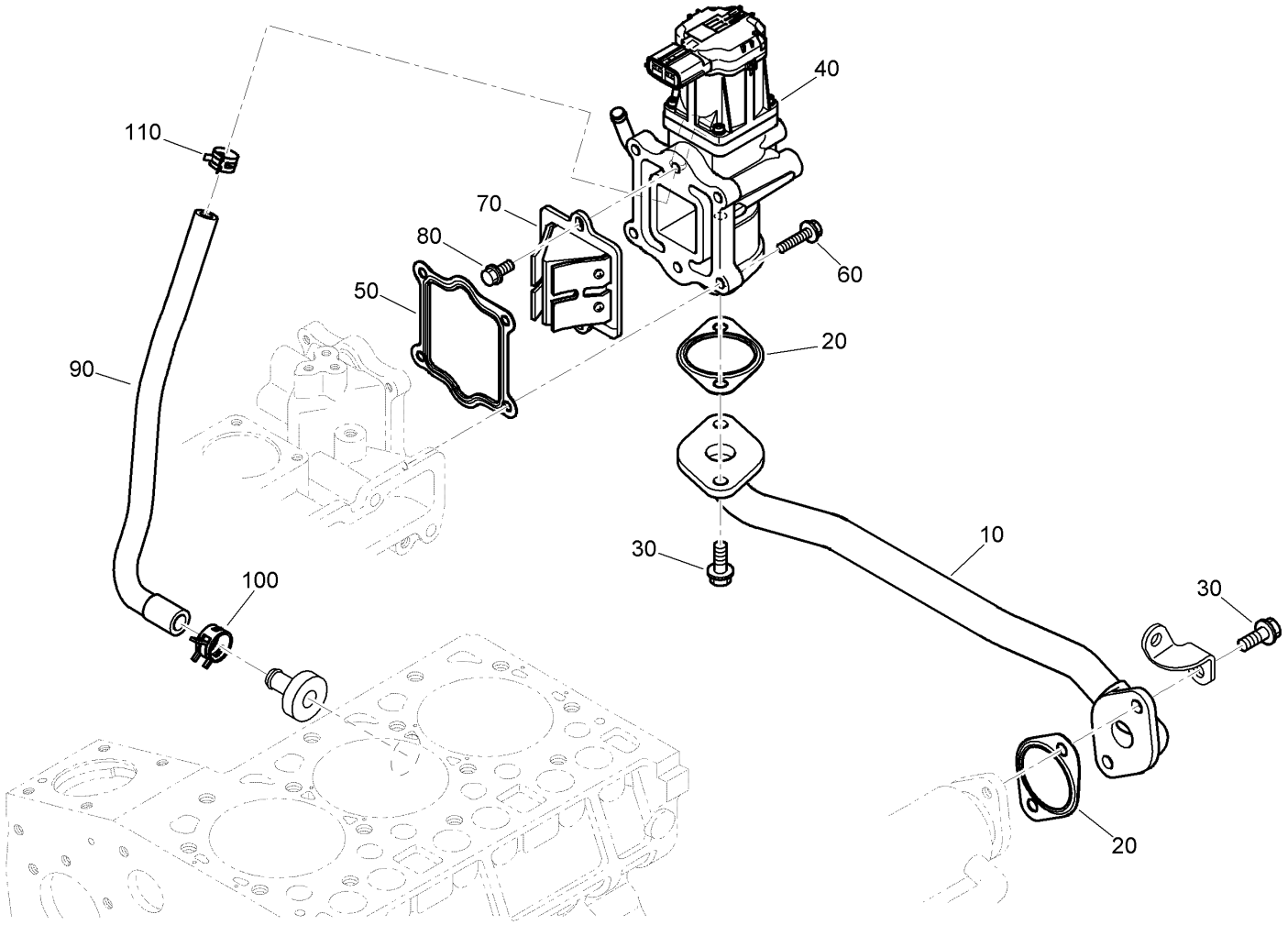

Exhaust Gas Recirculation Assembly (continued)

Ref.	Part Number	Qty.	Description
10	139-9785	1	Pipe-E G R
20	139-9751	2	Gasket-Cooler, E G R
30	115-8583	4	Bolt-Flange
40	139-9789	1	E G R Valve ASM
50	139-9750	1	Gasket-Valve, E G R
60	105-3789	4	Bolt
70	139-9692	1	Valve-Lead
80	100-1774	2	Bolt-Flange
90	139-9770	1	Hose
100	105-2879	1	Clamp-Hose
110	139-9515	1	Clamp-Hose

Exhaust Gas Recirculation Cooler Assembly

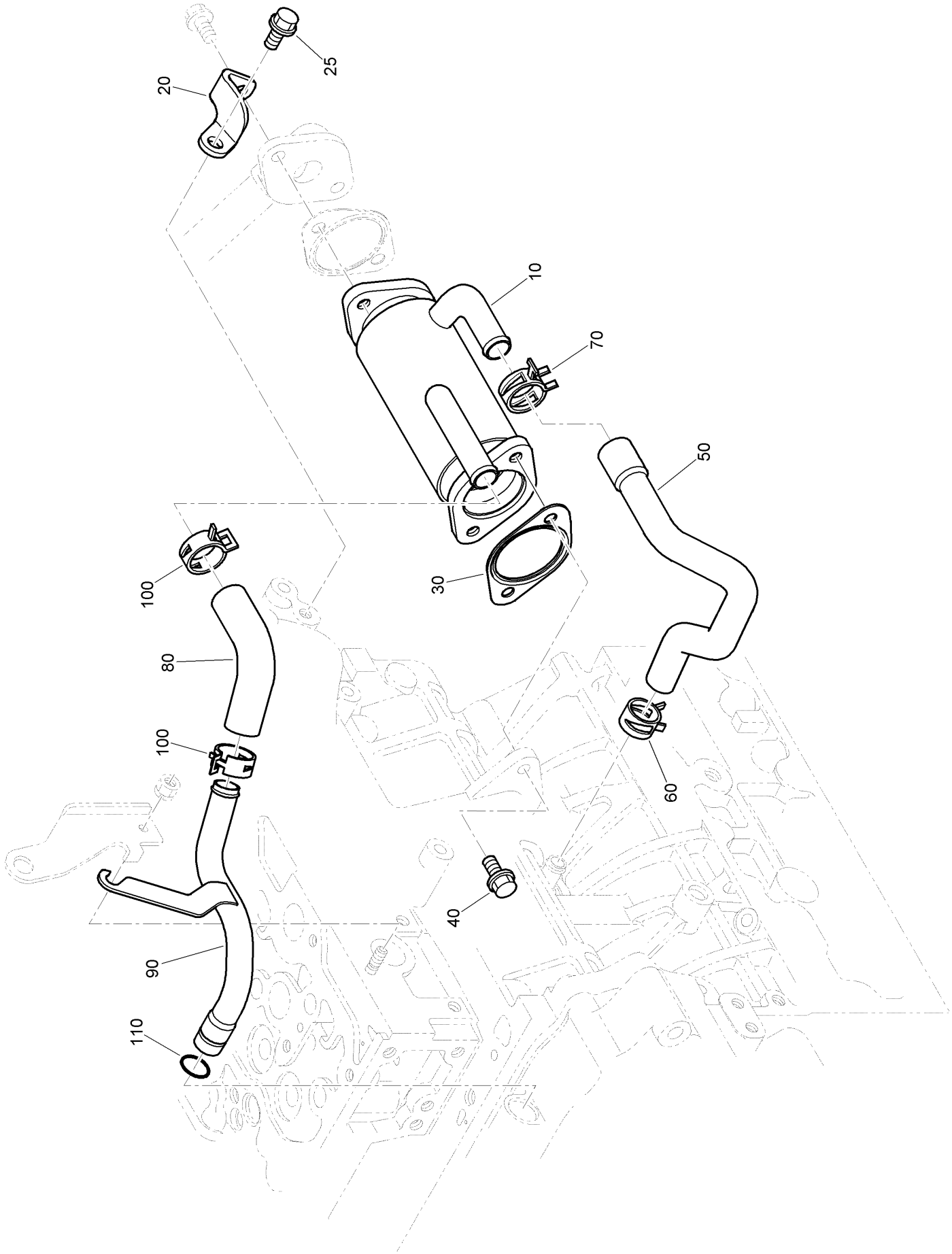

Exhaust Gas Recirculation Cooler Assembly (continued)

Ref.	Part Number	Qty.	Description
10	139-9793	1	Cooler-E G R
20	139-9794	1	Stay-Cooler, E G R
25	130-1159	1	Bolt-Flange
30	139-9751	1	Gasket-Cooler, E G R
40	115-8583	2	Bolt-Flange
50	139-9686	1	Hose-E G R, C1
60	105-2879	1	Clamp-Hose
70	98-9714	1	Clamp-Hose
80	139-4703	1	Hose-E G R C2
90	139-9753	1	Pipe-E G R, C2
100	139-9591	2	Clamp-Hose
110	139-9511	1	O-Ring

Turbo Charger Assembly

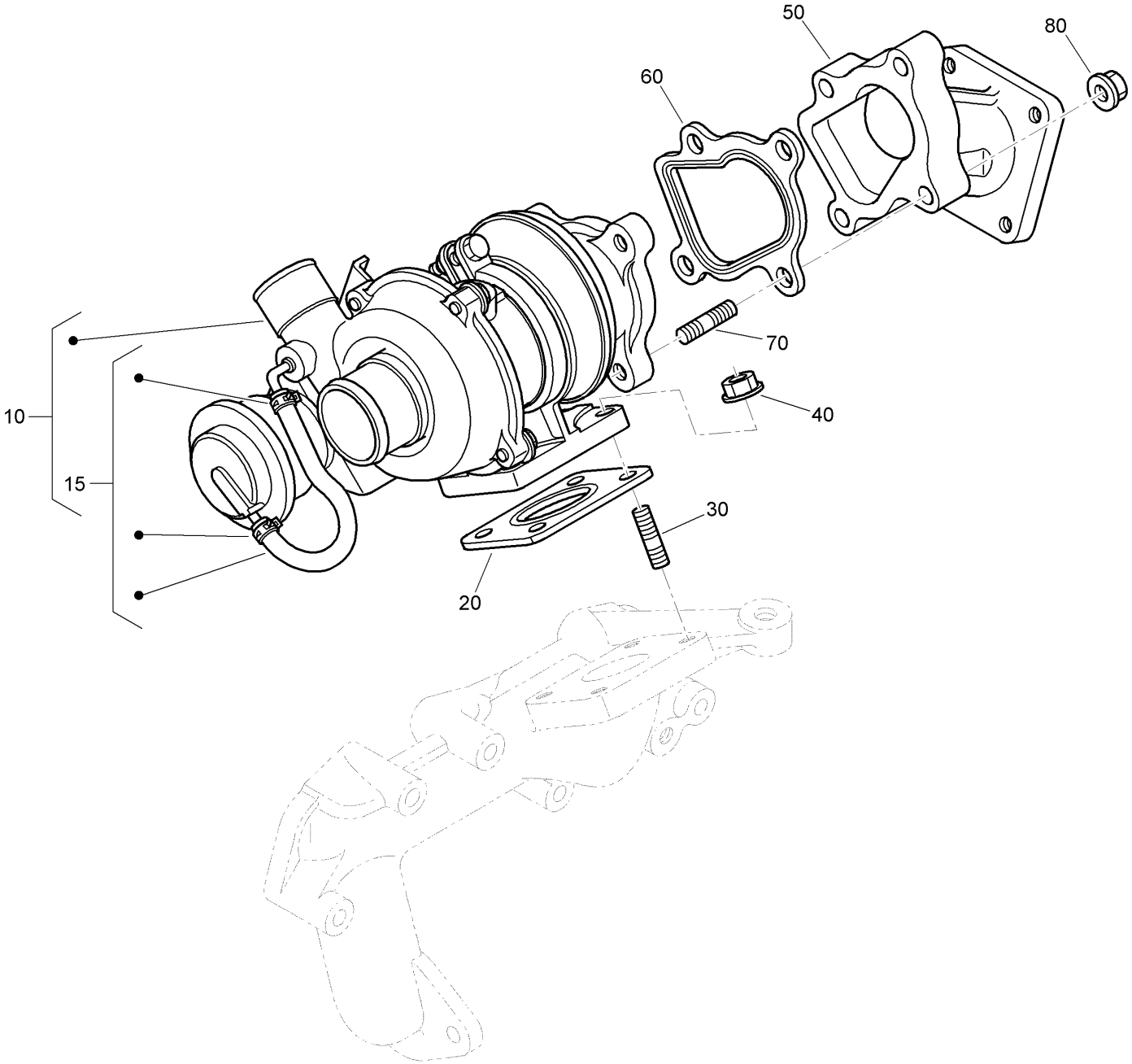

Turbo Charger Assembly (continued)

Ref.	Part Number	Qty.	Description
10	139-9784	1	Turbo Charger ASM
15	139-9673	1	Hose ASM
20	100-9314	1	Gasket
30	139-9689	4	Bolt-Stud
40	139-9691	4	Nut-Flange
50	139-9783	1	Flange-Muffler
60	139-9693	1	Gasket-Flange, Muffler
70	139-9625	4	Stud
80	139-9691	4	Nut-Flange

Diesel Oxidation Catalyst Muffler Assembly

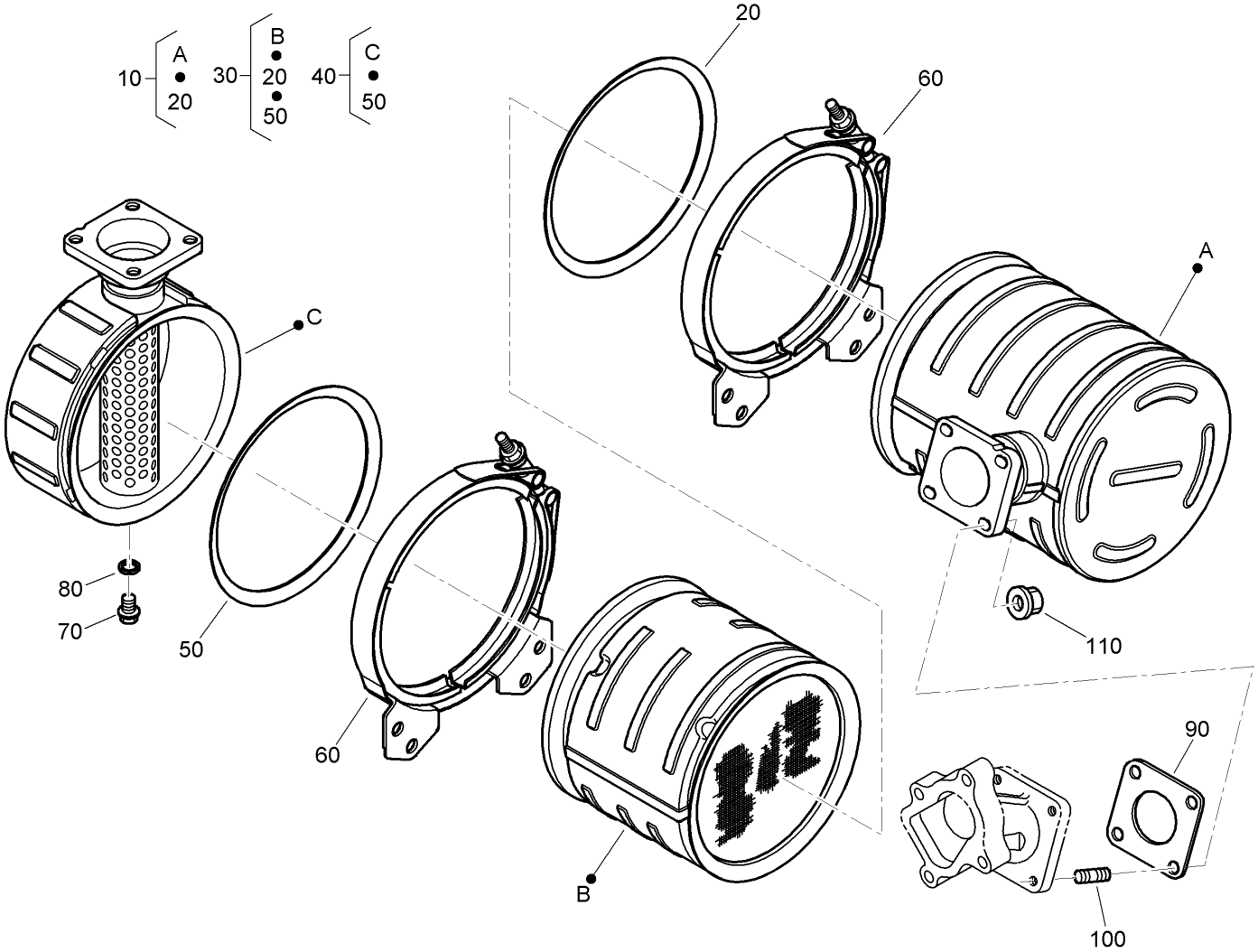

Diesel Oxidation Catalyst Muffler Assembly (continued)

Ref.	Part Number	Qty.	Description
10	139-9797	1	Doc1 Catalyst Kit
20	139-9733	2	Gasket-D P F
30	139-4721	1	Doc2 Catalyst Kit
40	139-9698	1	Body Kit
50	139-9733	1	Gasket-D P F
60	139-4706	2	Bracket-V Band, D P F
70	100-1774	1	Bolt-Flange
80	98-7654	1	Gasket
90	100-9333	1	Gasket-Muffler
100	139-9690	4	Bolt-Stud
110	139-9691	4	Nut-Flange

Diesel Oxidation Catalyst Muffler Bracket Assembly

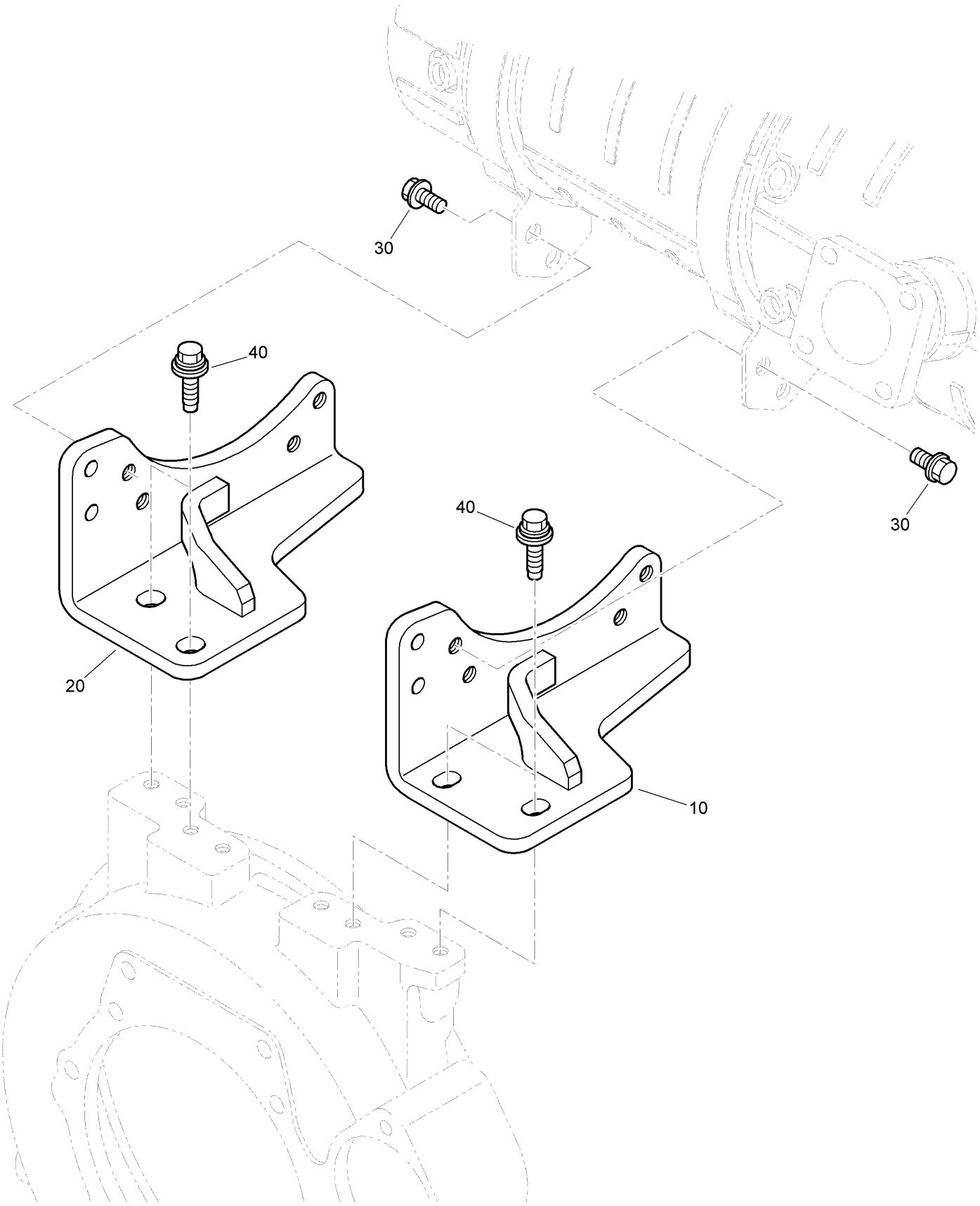

Diesel Oxidation Catalyst Muffler Bracket Assembly (continued)

Ref.	Part Number	Qty.	Description
10	139-9734	1	Bracket-D P F 1
20	139-9735	1	Bracket-D P F 2
30	127-0406	8	Bolt-Flange
40	139-4714	4	Bolt

Oil Separator Assembly

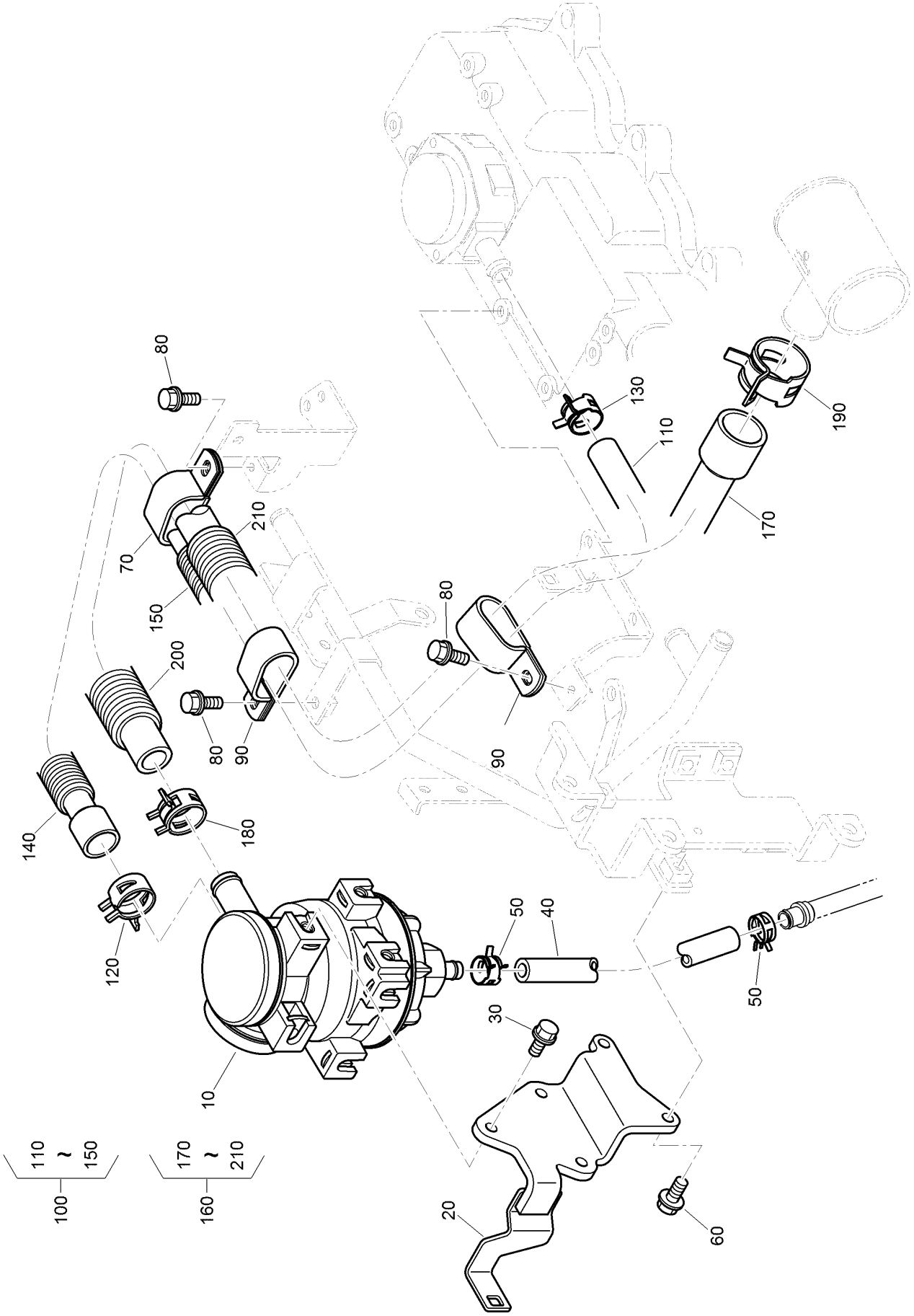

Oil Separator Assembly (continued)

Ref.	Part Number	Qty.	Description
10	139-9695	1	Separator ASM
20	139-9780	1	Bracket-Separator
30	127-0403	3	Bolt-Flange
40	139-9757	1	Tube-Return, Oil
50	139-9515	2	Clamp-Hose
60	127-0403	2	Bolt-Flange
70	139-9748	1	Clamp-Hose
80	100-1774	3	Bolt-Flange
90	139-4708	2	Clamp-Hose
100	139-9778	1	Breather 1 Tube ASM
110	139-9781	1	Tube-Breather 1
120	98-9714	1	Clamp-Hose
130	115-8524	1	Clamp-Hose
140	139-9650	1	Tube-Pipe
150	139-9786	1	Tube-Corrugate
160	139-9779	1	Breather 2 Tube ASM
170	139-9782	1	Tube-Breather 2
180	98-9714	1	Clamp-Hose
190	139-9516	1	Clamp-Hose
200	139-9787	1	Tube-Corrugate
210	139-9788	1	Tube-Corrugate

Oil Separator (Component Parts) Assembly

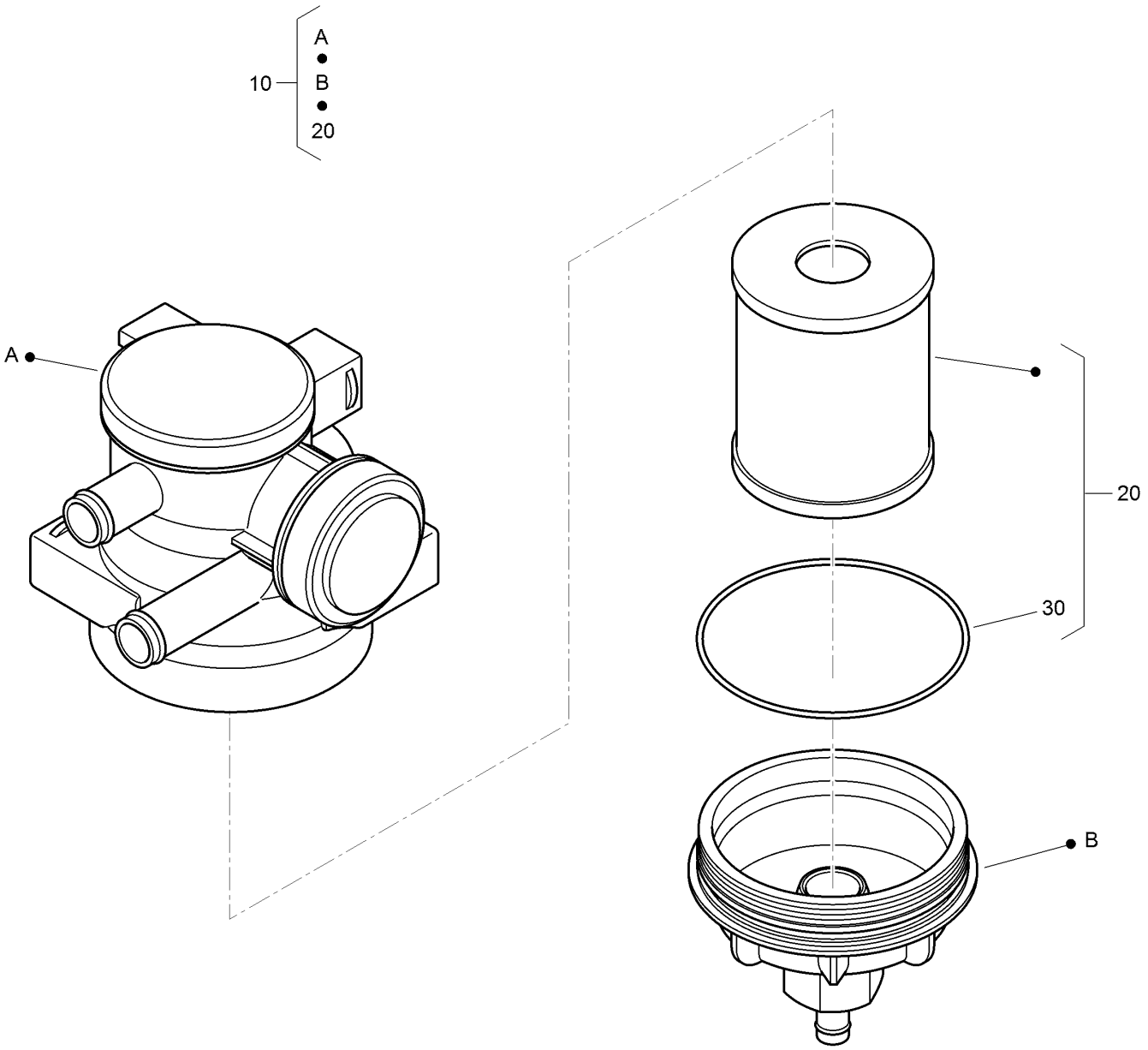

Oil Separator (Component Parts) Assembly (continued)

Ref.	Part Number	Qty.	Description
10	139-9695	1	Separator ASM
20	139-9697	1	Element Kit
30	139-9696	1	O-Ring

Oil Pipe (Turbo Charger) Assembly

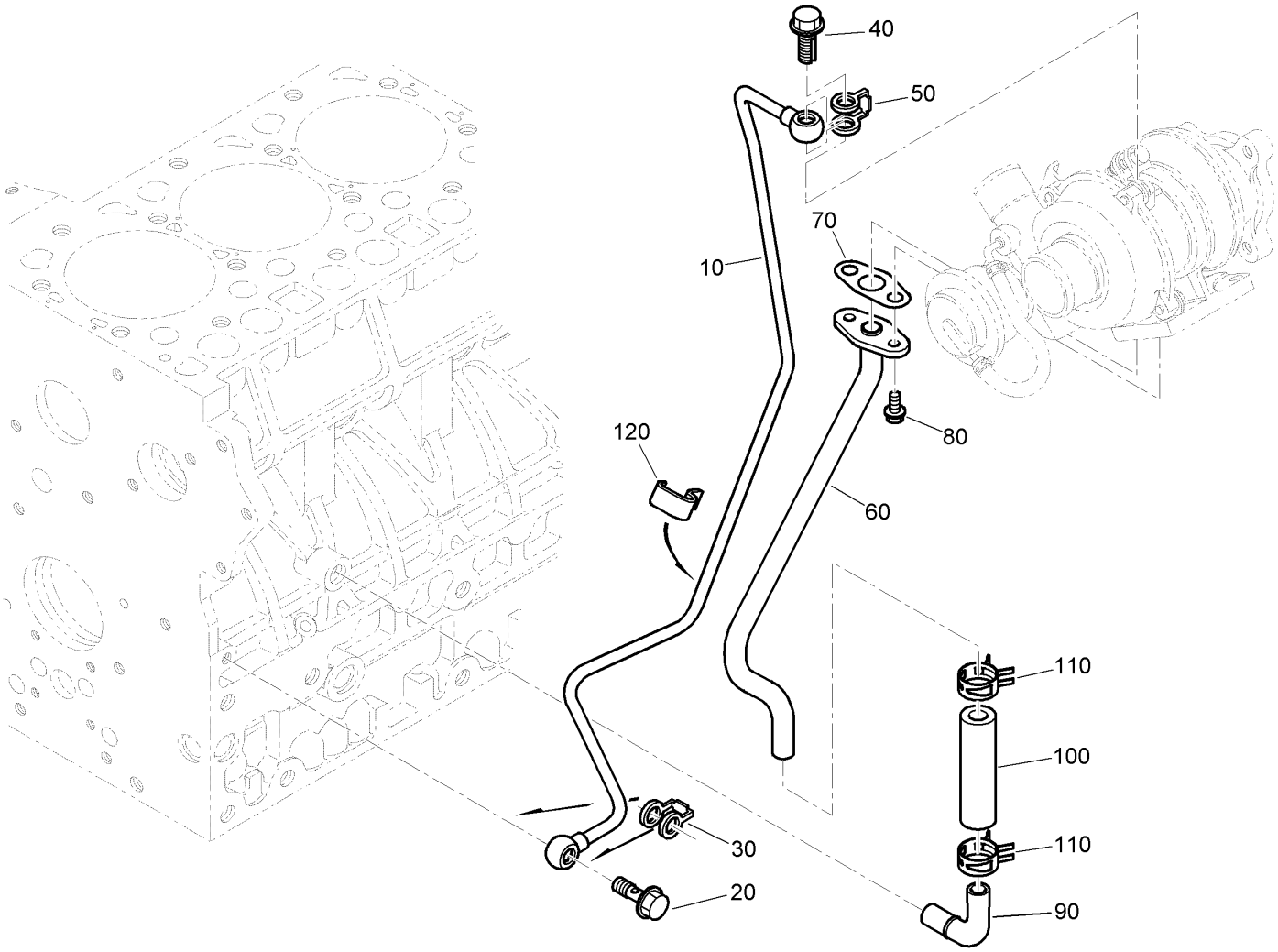

Oil Pipe (Turbo Charger) Assembly (continued)

Ref.	Part Number	Qty.	Description
10	139-9774	1	Pipe
20	130-1564	1	Bolt-Connect
30	139-9639	1	Gasket
40	139-9679	1	Bolt-Joint, Eye
50	130-1423	1	Gasket
60	139-9775	1	Pipe-Oil 2
70	139-9627	1	Gasket-Pipe, Oil
80	100-1774	2	Bolt-Flange
90	100-9323	1	Pipe-Oil
100	139-9680	1	Tube-Oil
110	98-9714	2	Clamp-Hose
120	139-9776	1	Clamp-Pipe

Oil Cooler Assembly

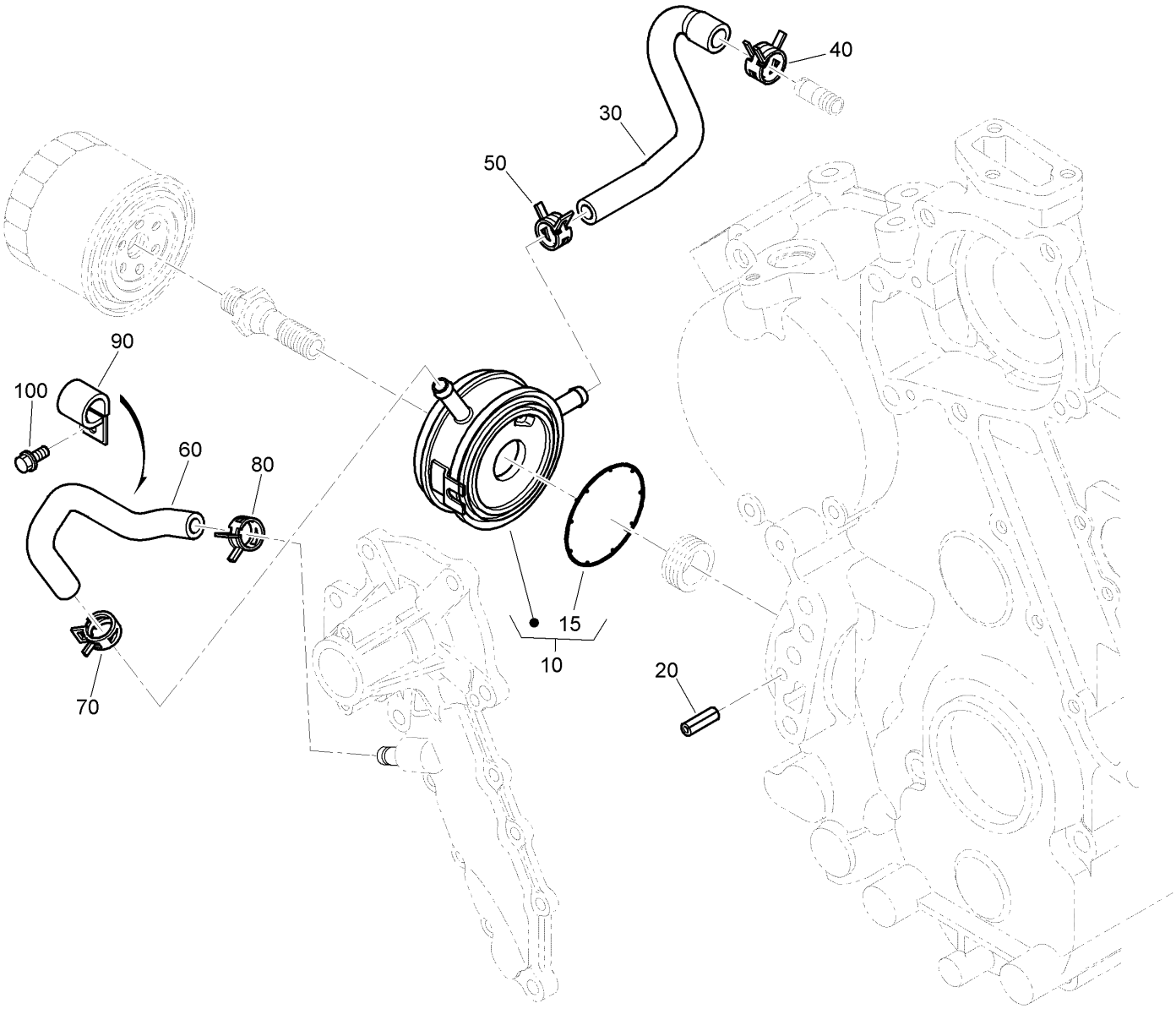

Oil Cooler Assembly (continued)

Ref.	Part Number	Qty.	Description
10	139-9666	1	Oil Cooler ASM
15	139-9667	1	Packing
20	130-1169	1	Pin-Roller
30	139-9604	1	Hose-Cooler, Oil
40	105-2879	1	Clamp-Hose
50	98-9579	1	Band-Pipe
60	139-9736	1	Hose-Cooler, Oil
70	98-9579	1	Band-Pipe
80	98-9579	1	Band-Pipe
90	139-9737	1	Clamp
100	100-1774	1	Bolt-Flange

Electronic Control Unit Assembly

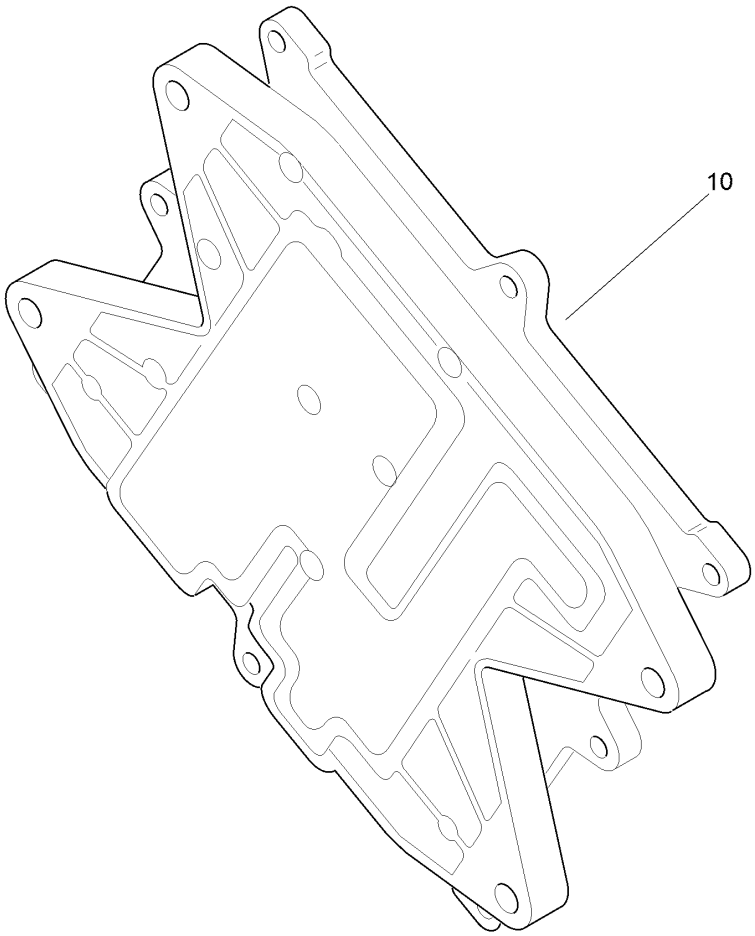

Electronic Control Unit Assembly (continued)

Ref.	Part Number	Qty.	Description
10	139-9681	1	E C U ASM

Miscellaneous Engine Parts

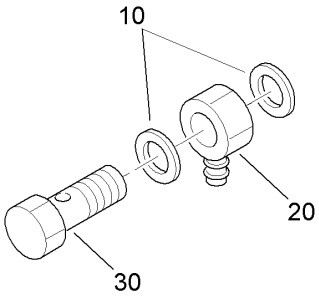

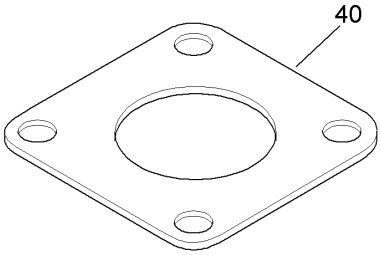

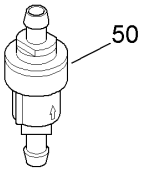

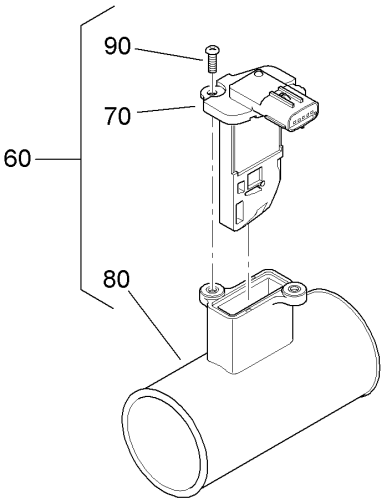

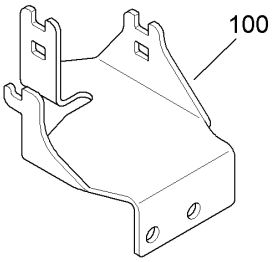

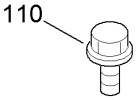

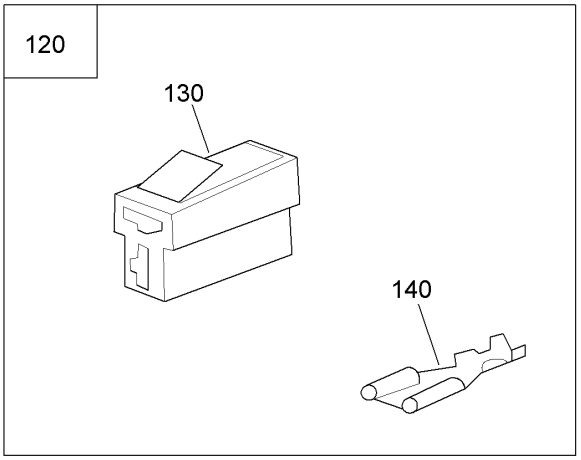

Miscellaneous Engine Parts (continued)

Ref.	Part Number	Qty.	Description
10	137-0067	8	O-Ring
20	137-0065	4	Adapter-Fuel
30	137-0066	4	Bolt-Joint
40	100-9333	1	Gasket-Muffler
50	139-9669	1	Valve-Check, Fuel
60	136-4741	1	Sensor
70	139-9688	1	Sensor-Flow, Air
80	139-9730	1	Pipe-Flow, Air
90	139-9507	2	Screw-Phillips, Pan Head
100	139-9633	1	Bracket
110	130-1159	2	Bolt-Flange
120	98-9699	2	Terminal
130	139-9590	1	Coupler ASM
140	98-9698	1	Connector

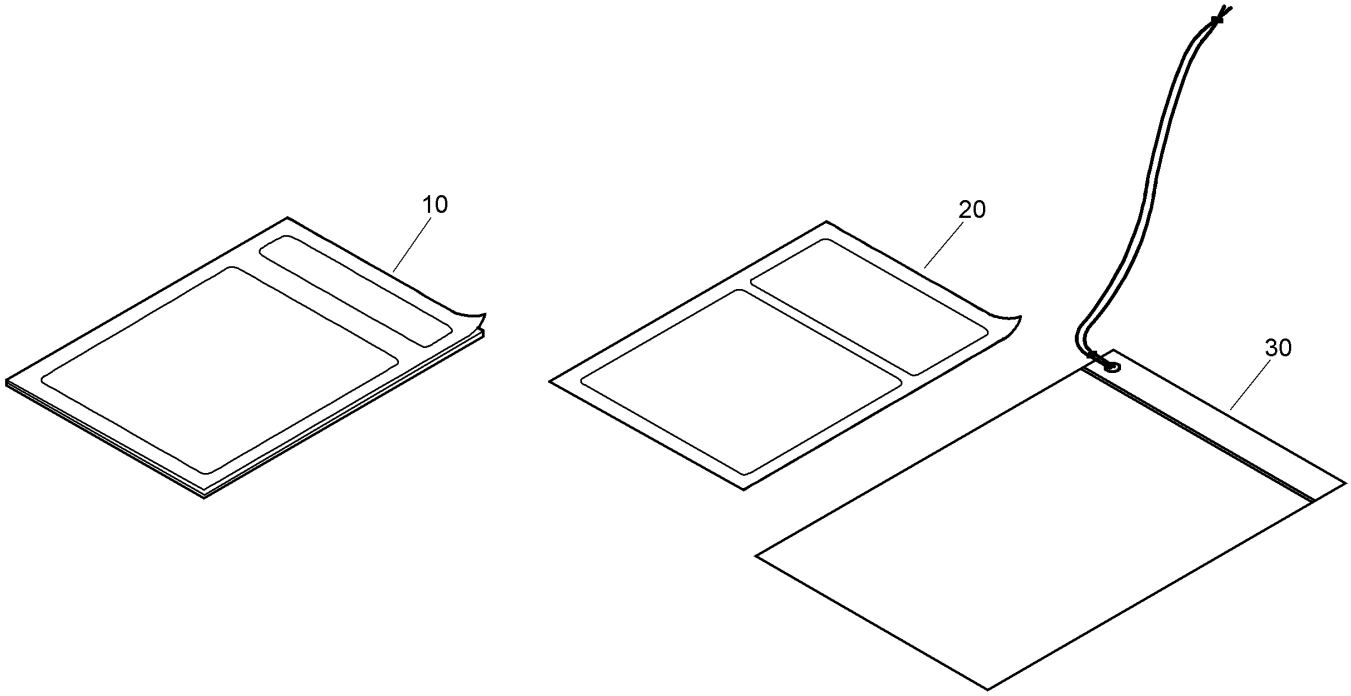
10
20
30

Operator Manual (continued)

Ref.	Part Number	Qty.	Description
10	139-9699	1	Manual-Operator
20	139-9682	1	Manual-Instruction
30	139-9687	1	Bag-Plastic

Attachments and Accessories

For 22530 — Dingo TXL 2000 Tool Carrier

Product Name	Model/Part
Premium Engine Oil 10w30 (55 Gallon Drum)	121-6392
Premium Engine Oil 10w30 (5 Gallon Pail)	121-6393
Premium Engine Oil 15w40 (55 Gallon Drum)	121-6394
Premium Engine Oil 15w40 (5 Gallon Pail)	121-6395
Side ASM #2 - Wood	121-9395
Locking Fuel Cap	126-4107
PX Hydraulic Fluid (5 Gal)	133-8086
PX Hydraulic Fluid (55 Gal)	133-8087
Green Ultra-Low Sulfur Diesel Fuel Cap	136-4866
Track-Mert	136-4869
Light Kit	136-4890
1000 Hour Filter Kit	136-4897
50 Hour Filter Kit	136-4898
400 Hour Filter Kit	136-4899
PX Hydraulic Fluid-4 Pack (Gallon)	138-9460
Telescoping Auxiliary Wire Harness Kit	139-1186
Grapple	22535
High Volume Bucket with Edge	22546
Standard Bucket with Edge	22547
Grading Bucket	22548
Adjustable Forks	22549
Standard Bucket without Edge	22576

Notes:

TORO®

Count on it.