Form No. 3484-280 Rev A

TORO®

Count on it.

Parts Catalog

TX 1000 Turbo

Wide Track Compact Tool Carrier

Model No. 22588—Serial No. 421218227 and Up

Register at www.Toro.com.
Original Instructions (EN)

CE

3484-280 A

Ordering Replacement Parts

To order replacement parts, please supply the part number, the quantity, and the description of each part desired.

Understanding Reference Numbers

Each identified part in an illustration has a reference number. The reference number for a part also appears in the parts list, along with other information about the part.

This catalog uses two special reference number formats, one to indicate parts in a service assembly and another to indicate the quantity of a given part in an illustration.

Service Assembly Reference Numbers

Parts in service assemblies have reference numbers in the form a:b. The a represents the reference number of the entire service assembly and the b represents a sequential number unique to each part within the service assembly.

For example, a wheel assembly might be identified by reference number 6, the tire by 6:1, the valve by 6:2, and the wheel by 6:3. When you order the assembly identified by reference number 6, you receive all parts identified by reference numbers 6:1,6:2, and 6:3. However, you may also order any part individually. Reference numbers of this type appear in illustration and in parts lists.

Reference Numbers Indicating Quantity

In an illustration, if a reference number indicates more than one part, the reference number has the form nX y. The n represents the quantity of the part, the X is the multiplication symbol, and the y represents the reference number.

For example, in an illustration, the reference number 2X 37 means that two of the parts identified by reference number 37 are indicated.

Contents

Frame Assembly . . . 4
Main Frame Assembly No. 163-1177 . . . 6
Track Assembly . . . 8
Track Assembly No. 163-0954 . . . 10
Track Assembly No. 163-0953 . . . 12
Engine and Muffler Assembly . . . 14
Air Cleaner Assembly No. 147-6793 . . . 16
Fuel System Assembly . . . 18
Fuel Tank Assembly No. 145-4466 . . . 20
Cooling System Assembly . . . 22
Principal Hydraulics Assembly . . . 24
Hydraulic Loader Valve Assembly No. 147-6888 . . . 26
Controls Assembly . . . 28
Control Valve Assembly No. 145-3279 . . . 30
Loader Arm Assembly . . . 32
Loader Arm Assembly No. 145-4307 . . . 34
Attachment Plate Assembly No. 140-6017 . . . 36
Hydraulic Cylinder Assembly No. 140-7634 . . . 38
Hydraulic Cylinder Assembly No. 147-6889 . . . 40
Platform Assembly . . . 42
Hood and Covers Assembly . . . 44
Electrical Assembly . . . 46
Traction Hydraulics Assembly . . . 48
Hydraulic Tank Assembly No. 145-4467 . . . 50
Parking Brake Assembly . . . 52
Cylinder Block Assembly . . . 54
Gear Housing Assembly . . . 56
Fywheel Housing and Oil Sump Assembly . . . 58
Cylinder Head and Bonnet Assembly . . . 60
Suction Manifold Assembly . . . 62
Exhaust Manifold Assembly . . . 64
Camshaft and Driving Gear Assembly . . . 66
Turbine Assembly . . . 68
Crankshaft and Piston Assembly . . . 70
Lube Oil System Assembly . . . 72
Oil Pump Assembly . . . 74
Cooling Water System Assembly . . . 76
Fuel Injection Pump Assembly . . . 78
Governor Assembly . . . 80
Fuel Injection Valve Assembly . . . 82
Starter Motor Assembly . . . 84
Generator Assembly . . . 86
Electronic Control Unit Assembly . . . 88
Accessories . . . 90
Attachments and Accessories . . . 92

© 2026—The Toro® Company

8111 Lyndale Avenue South
Bloomington, MN 55420

Contact us at www.Toro.com.
Printed in the USA.

All Rights Reserved

Frame Assembly

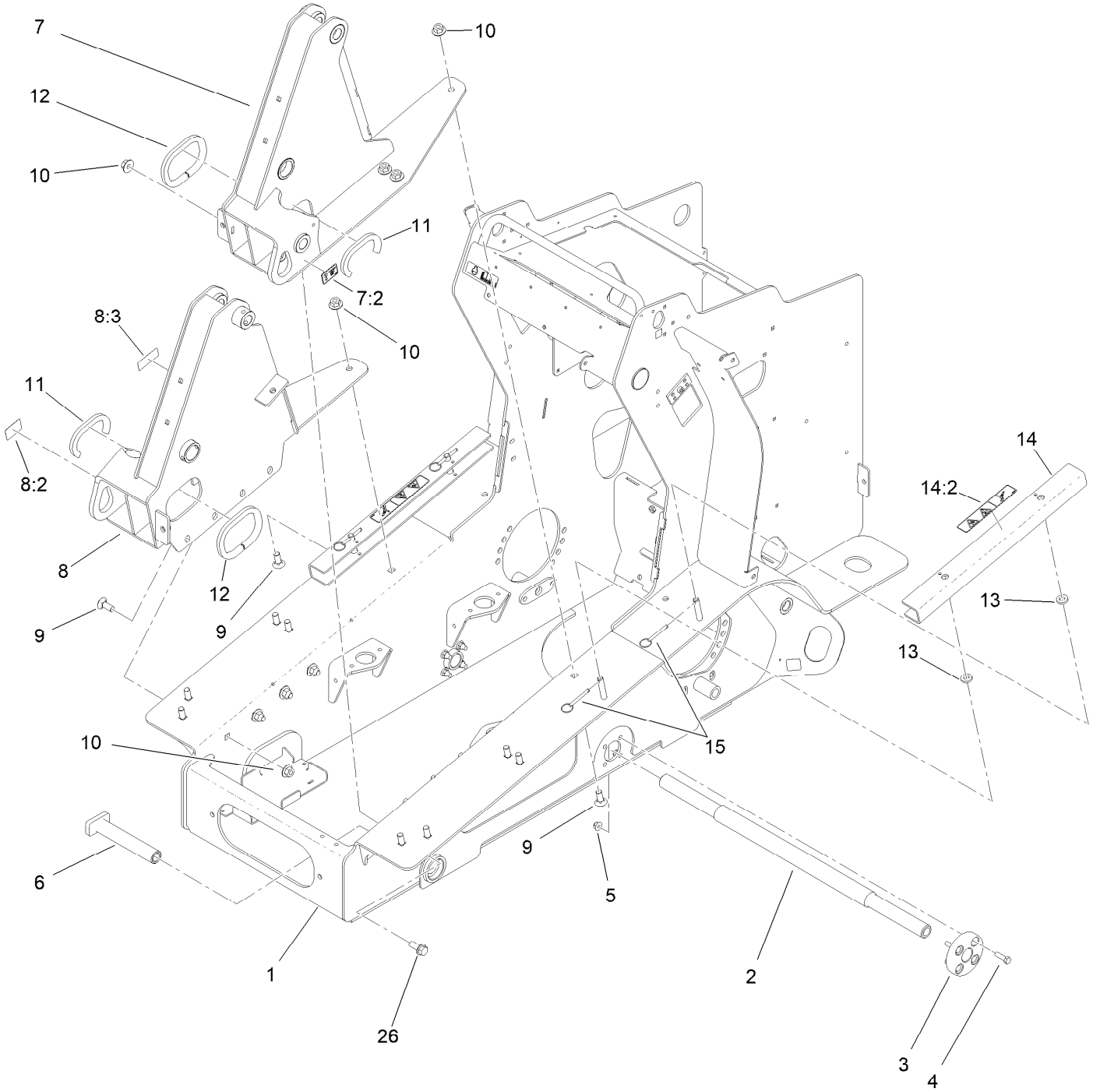

Frame Assembly (continued)

Ref.	Part Number	Qty.	Description
1	163-1177	1	Main Frame
2	125-0425	1	Shaft-Track
3	132-9074	2	Hub-Shaft
4	323-44	8	Screw-HH
5	119-4042	8	Nut-HF, NI
6	145-3322	2	Pin-Track
7	145-4471	1	Tower ASM-LH
7:2	147-6707	1	Decal-Lift, Tie Down
8	145-4472	1	Tower ASM-RH
8:2	147-6707	1	Decal-Lift, Tie Down

Ref.	Part Number	Qty.	Description
8:3	127-0392	1	Decal-Hot Surface
9	3233-1	16	Screw-CARR
10	32128-52	18	Nut-Lock, Flg
11	133-8571	2	Trim-Seal
12	133-8572	2	Trim-Seal
13	83-1470	4	Washer-Neoprene
14	130-5315	2	Arm-Locking
14:2	115-4858	1	Decal-Danger
15	108-0094	4	Pin-Cotterless
26	3234-38	2	Screw-HHF

Main Frame Assembly No. 163-1177

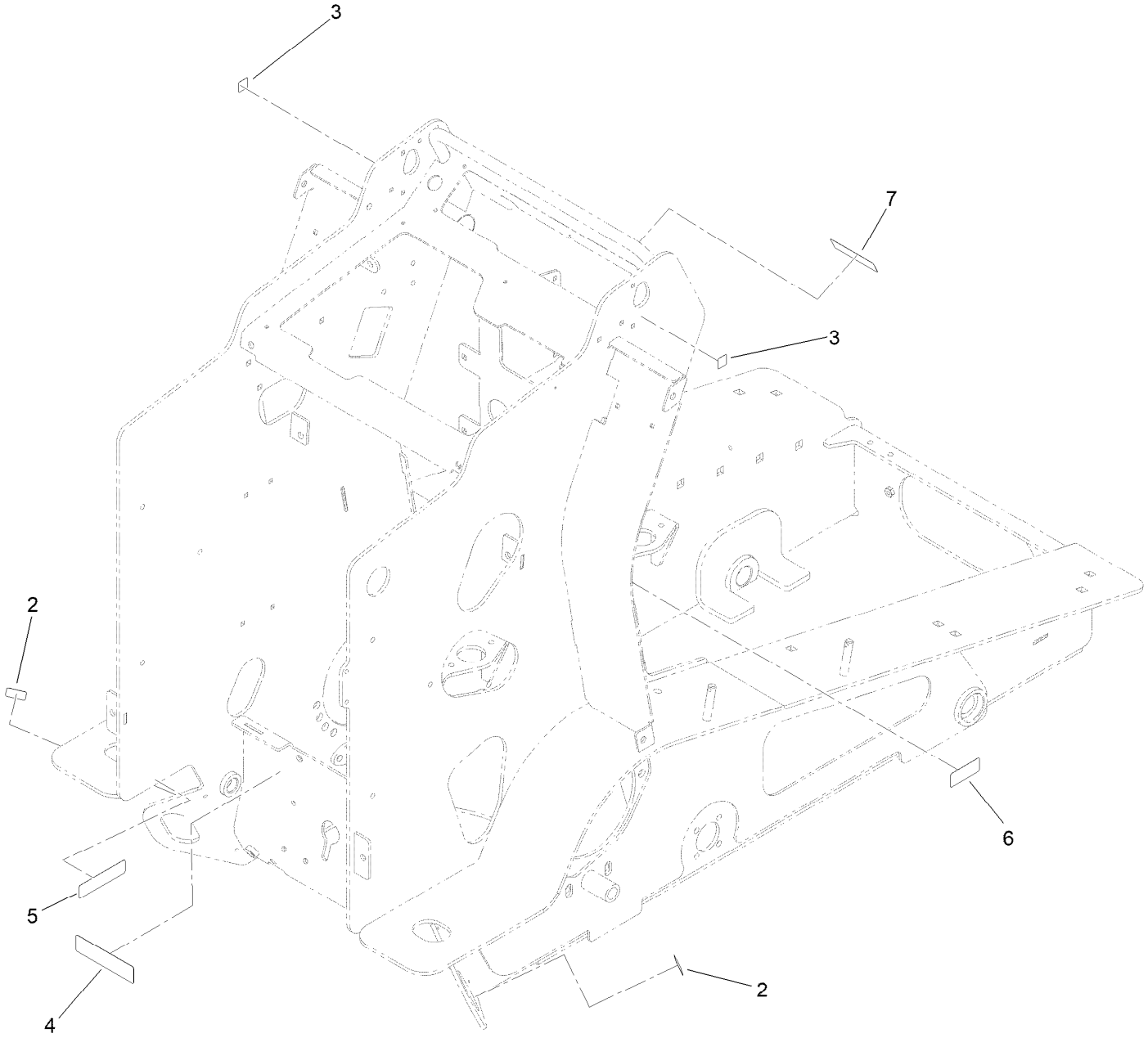

Main Frame Assembly No. 163-1177 (continued)

Ref.	Part Number	Qty.	Description
2	132-9051	2	Decal-Tiedown
3	125-4967	2	Decal-Lift Here
4	163-1201	1	Decal-Pr65, Spk Arr, Txt
5	163-1199	1	Decal-Radiator Fill
6	131-0709	1	Decal-Parking Brake
7	127-0392	1	Decal-Hot Surface

Track Assembly

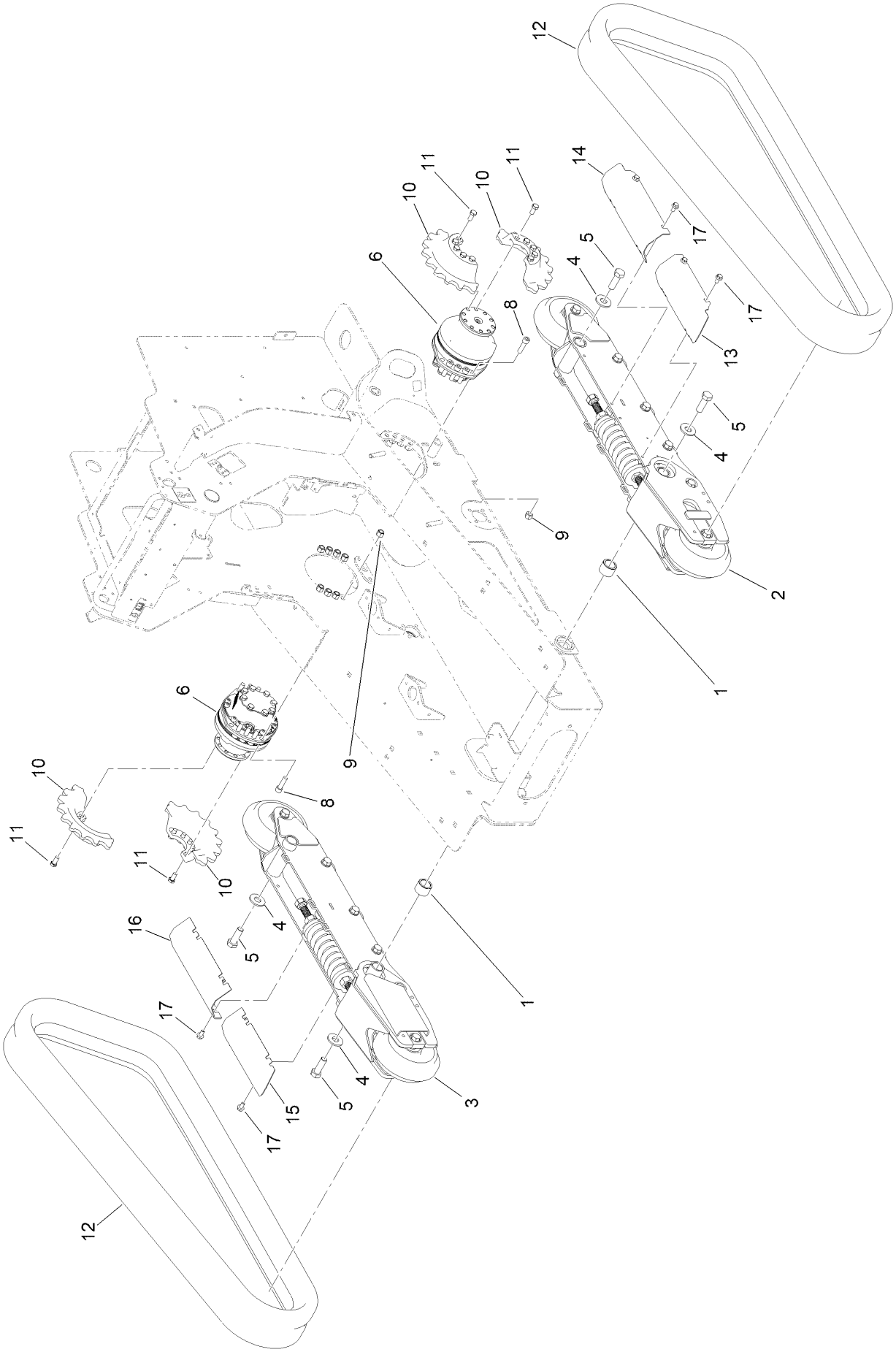

Track Assembly (continued)

Ref.	Part Number	Qty.	Description
1	144-4268	4	Spacer-Track
2	163-0954	1	Track ASM-LH
3	163-0953	1	Track ASM-RH
4	99-2659	4	Washer
5	AU426-1256	4	Screw-HH
6	145-4545	2	Wheelmotor ASM
8	131-0661	16	Screw-HSH
9	3296-23	16	Nut-Lock, NI
10	139-7118	4	Sprocket-Drive
11	33116-025	20	Screw-HH
12	138-0777	2	Track-Wide,
13	163-0974-05	1	Cover Rear LH
14	163-0975-05	1	Cover Front LH
15	163-0972-05	1	Cover Rear RH
16	163-0973-05	1	Cover Front RH
17	93-2569	8	Screw-HHF

Track Assembly No. 163-0954

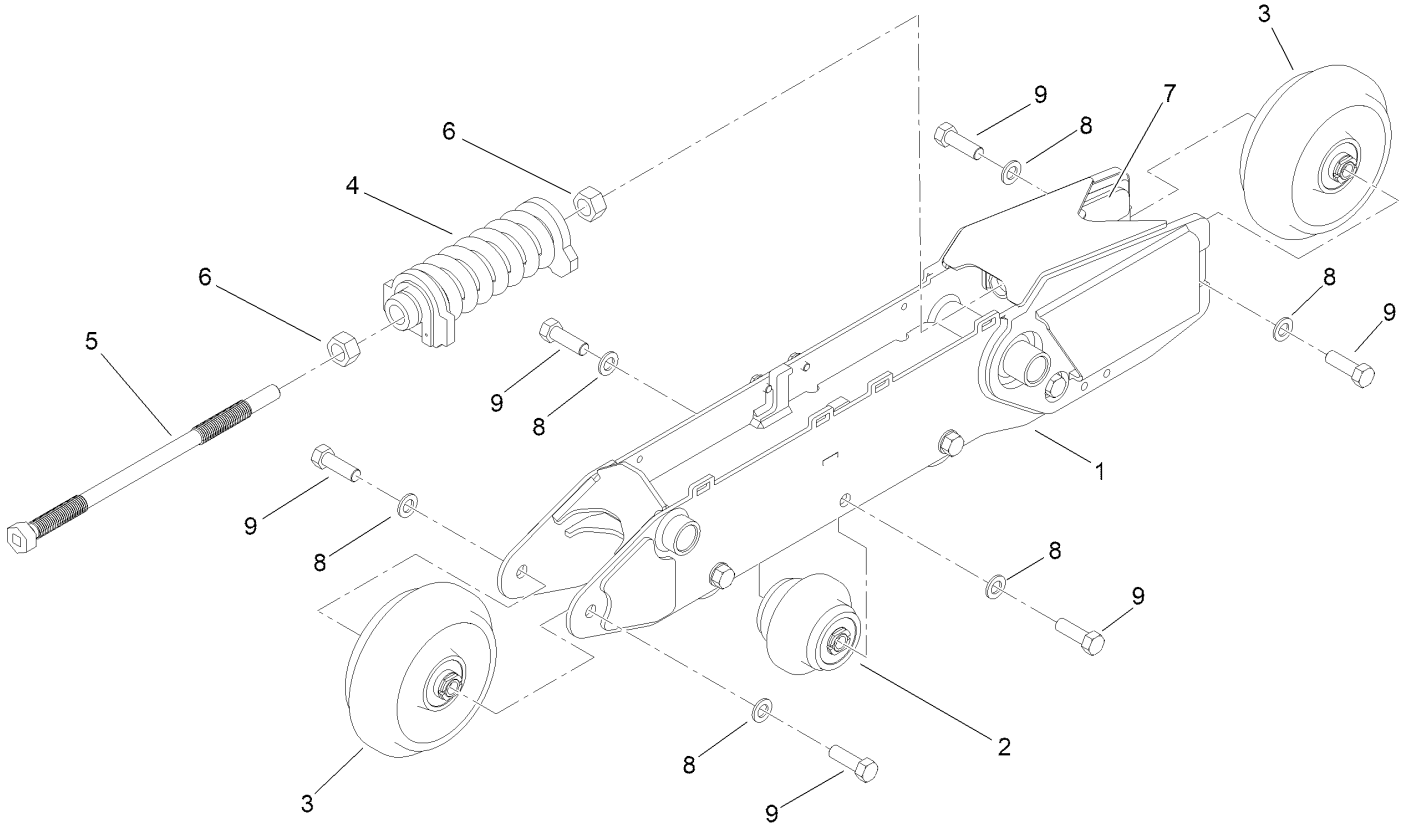

Track Assembly No. 163-0954 (continued)

Ref.	Part Number	Qty.	Description
1	163-0956-05	1	Track Frame LH - [blk-Txt]
2	163-0941	4	Wheel ASM-85MM, Single Flange
3	163-0947	2	Wheel ASM-180MM, Single Flange
4	163-0936	1	Kit-Spring Tension
5	163-0978	1	Screw - Tensionner
6	3217-15	2	Nut-Hex
7	163-0935-05	1	Tensionner Welded
8	119-1868	12	Washer
9	111-3484	12	Screw-HH

Track Assembly No. 163-0953

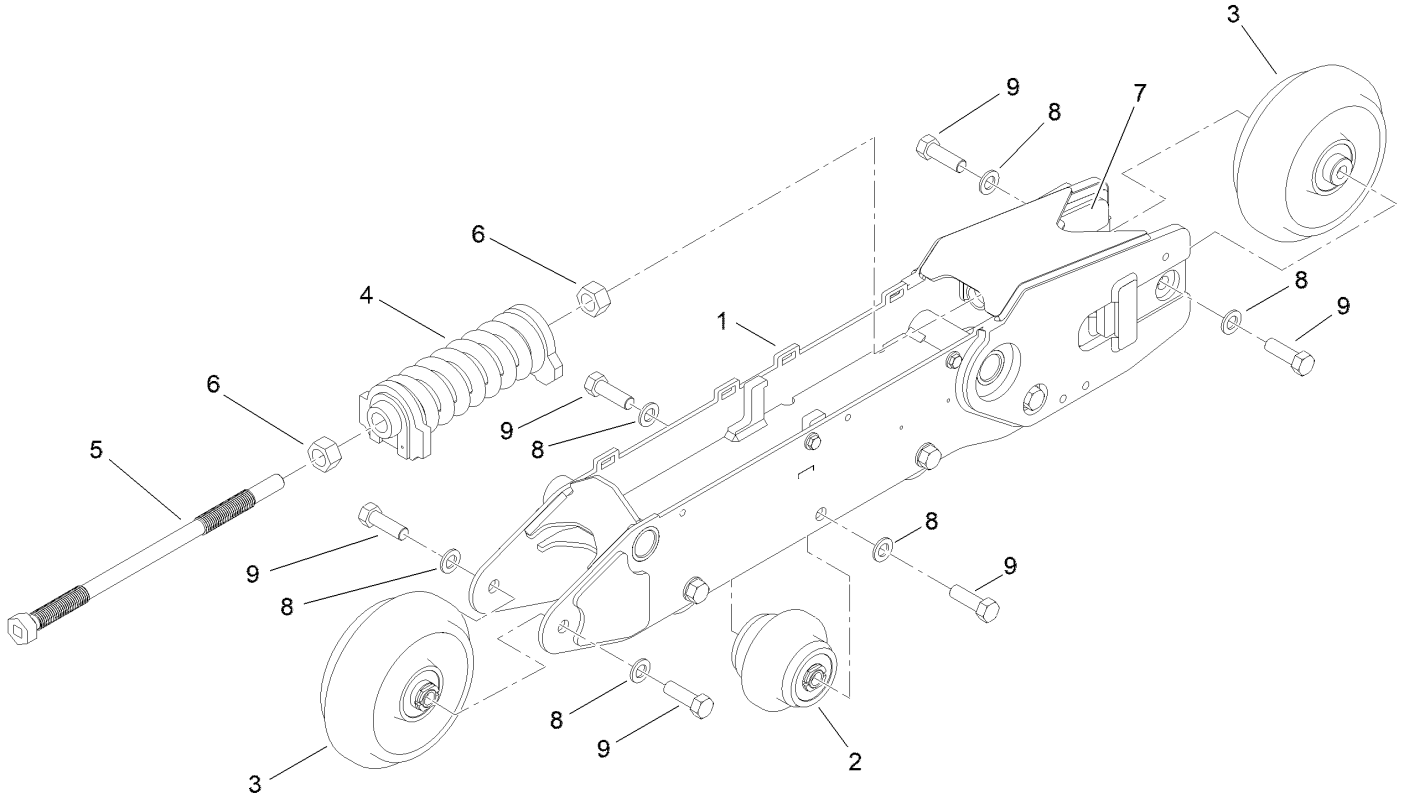

Track Assembly No. 163-0953 (continued)

Ref.	Part Number	Qty.	Description
1	163-0955-05	1	Track Frame RH - Weldment
2	163-0941	4	Wheel ASM-85MM, Single Flange
3	163-0947	2	Wheel ASM-180MM, Single Flange
4	163-0936	1	Kit-Spring Tension
5	163-0978	1	Screw - Tensionner
6	3217-15	2	Nut-Hex
7	163-0935-05	1	Tensionner Welded
8	119-1868	12	Washer
9	111-3484	12	Screw-HH

Engine and Muffler Assembly

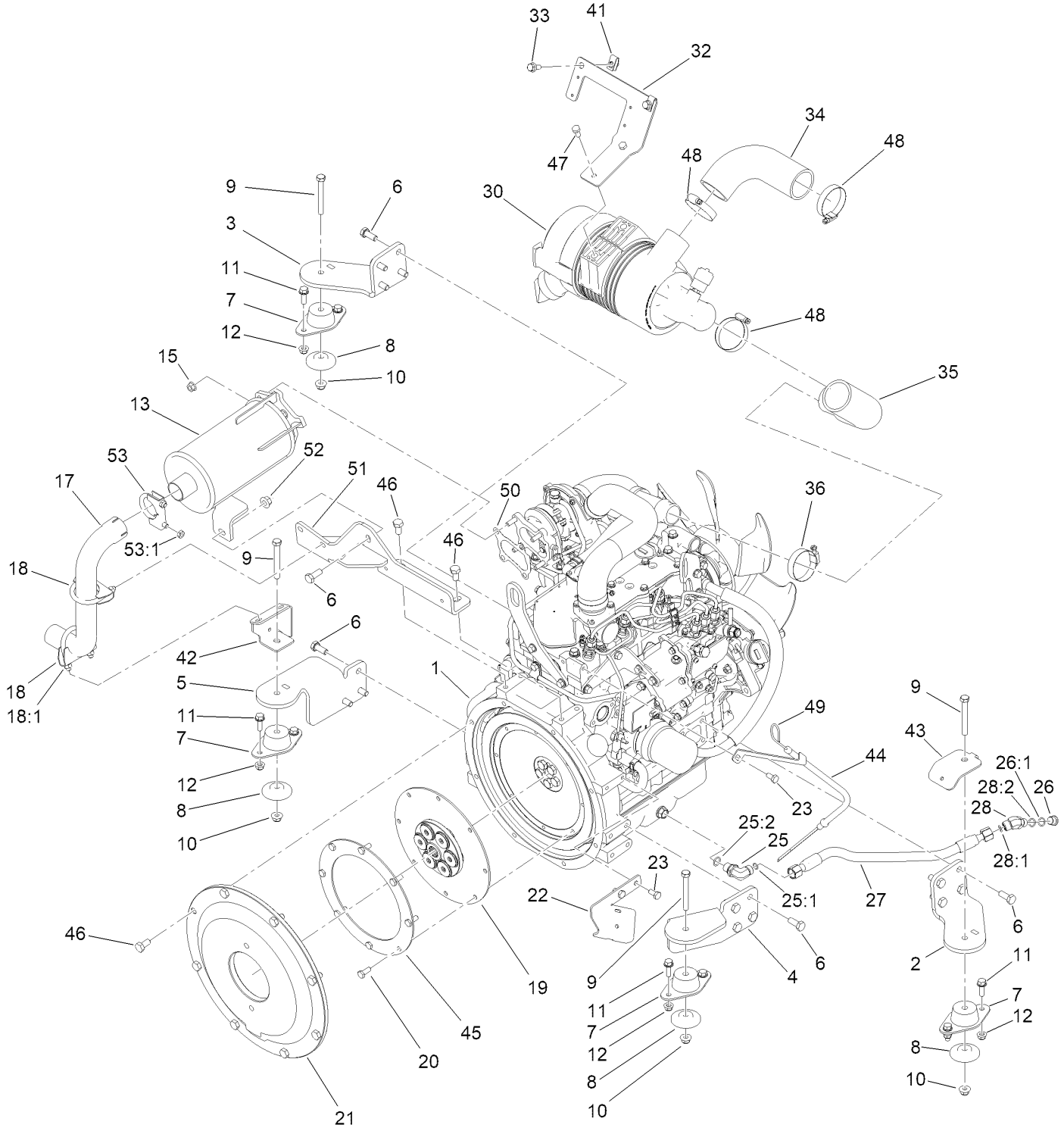

Engine and Muffler Assembly (continued)

Ref.	Part Number	Qty.	Description
1	163-1209SP	1	Engine-Yanmar, 3Tnv80Ft-Zmtr2
2	144-4417-03	1	Mount-Engine, LH, Rear
3	144-4418-03	1	Mount-Engine, RH, Rear
4	144-4419-03	1	Mount-Engine, LH, Front
5	144-4420-03	1	Mount-Engine, RH, Front
6	33115-025	16	Screw-HH
7	120-6274	4	Mount-Engine
8	138-6462	4	Support-Isolator
9	323-14	4	Screw-HH
10	119-4042	4	Nut-HF, NI
11	3234-29	8	Screw-HHF
12	119-4041	8	Nut-HF
13	147-6859	1	Muffler ASM
15	33004-00	4	Nut-HF
17	147-6865	1	Pipe-Exhaust
18	2112-6	2	Clamp-Muffler
18:1	3218-2	2	Nut-Hex Jam
19	126-6531	1	Coupler-Flywheel
20	33114-020	8	Screw-HH
21	145-3210-0P	1	Cover-Flywheel
22	145-4305-0P	1	Bracket-Guide, Hose
23	33114-010	3	Screw-HH
25	163-8722	1	Fitting-HYD, 90 DEG
25:1	237-22	1	O-Ring
25:2	133-4734	1	O-Ring

Ref.	Part Number	Qty.	Description
26	353-989	1	Plug-Hex, Hollow
26:1	237-42	1	O-Ring
27	164-1403	1	HYD Hose ASM
28	340-87	1	Fitting-Elbow, 45 DEG
28:1	237-22	1	O-Ring
28:2	237-42	1	O-Ring
30	147-6793	1	Air Cleaner ASM
32	147-6788-0P	1	Bracket-Air Cleaner
33	3234-47	2	Screw-HHF
34	147-6786	1	Hose-Intake
35	147-6787	1	Hose-Intake
36	2412-92	1	Clamp-Hose
41	115-7721	2	Nut-Clip, U
42	147-6866-0P	1	Bracket-Tailpipe, Foot
43	147-6759-0P	2	Bracket-Hose Guide
44	147-6768	1	Dipstick
45	147-6791	1	Ring-Flywheel
46	33115-020	10	Screw-HH
47	139-9940	2	Screw-HH,Patch
48	2412-130	3	Clamp-Hose
49	163-1158	1	Dipstick, Lub.Oil
50	147-6795	1	Gasket-Exhaust
51	147-6867-0P	1	Bracket-Muffler
52	136-8683	1	Nut-Lock
53	2112-9	1	Clamp
53:1	32128-20	2	Nut-HF

Air Cleaner Assembly No. 147-6793

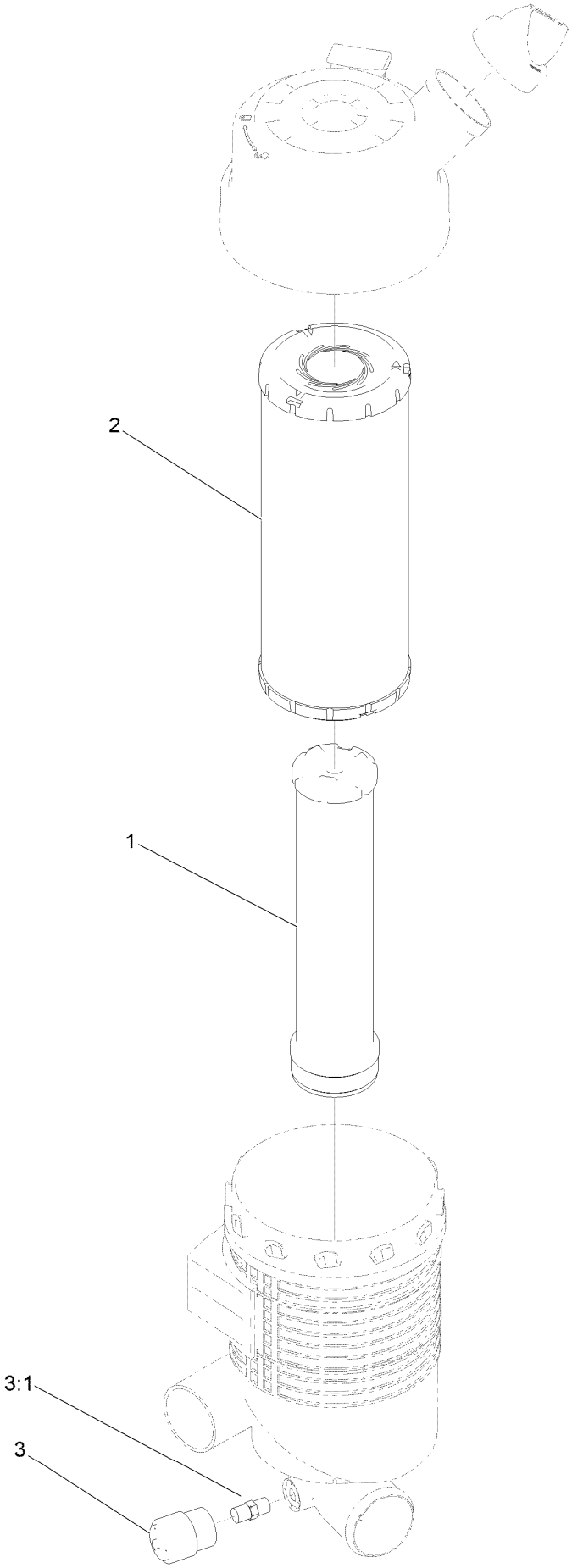

Air Cleaner Assembly No. 147-6793 (continued)

Ref.	Part Number	Qty.	Description
1	114-4057	1	Element-Safety
2	147-6812	1	Filter-Air
3	104-3563	1	Indicator
3:1	94-1416	1	Adapter-Indicator

Fuel System Assembly

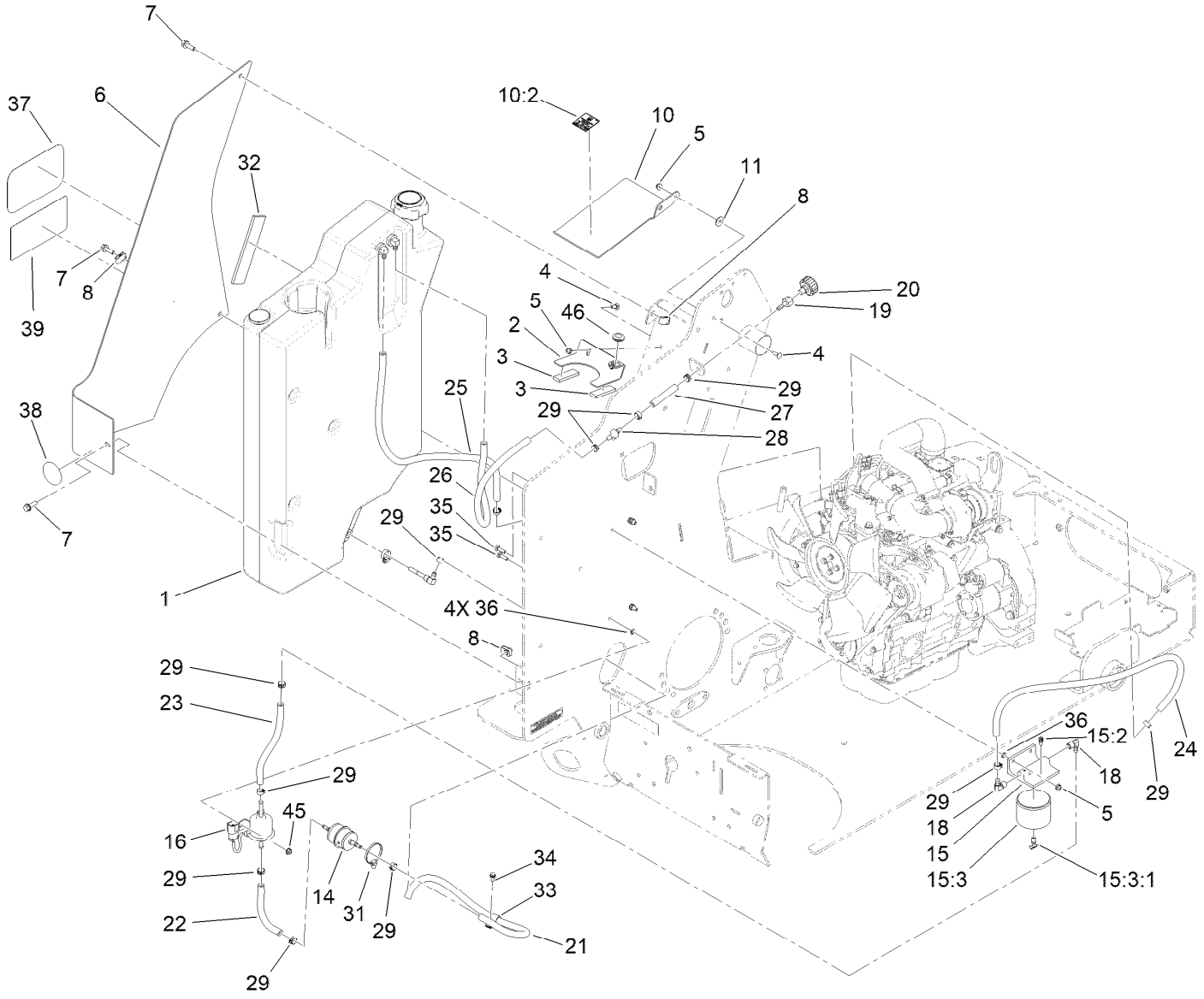

Fuel System Assembly (continued)

Ref.	Part Number	Qty.	Description
1	145-4466	1	Tank ASM-Fuel
2	164-3584-0P	1	Bracket-Tank, Hold Down
3	145-4430	2	Pad-Foam
4	3229-1	3	Screw-CARR
5	104-7201	5	Nut-HF, NI
6	145-4474	1	Tank Cover ASM-Fuel
7	3234-29	3	Screw-HHF
8	115-7721	3	Nut-Clip, U
10	145-4473	1	Tank Bracket ASM-Fuel
10:2	163-5287	1	Decal, No Smoking/Diesel Fuel
11	3290-456	1	Washer-Belleville
14	108-3828	1	Filter-Fuel
15	109-2678	1	Filter ASM
15:2	63-8290	1	Vent-Air
15:3	63-8300	1	Element-Spin On
15:3:1	63-8310	1	Valve-Drain
16	121-5613	1	Pump-Fuel, Electric
18	353-781	2	Fitting-HYD, 90
19	354-95	1	Fitting-Straight
20	68-6150	1	Breather

Ref.	Part Number	Qty.	Description
21	110-4112	1	Hose-Fuel
22	117-4026	1	Hose-Fuel
23	136-6098	1	Hose-Fuel
24	110-9662	1	Hose-Fuel
25	109-0309	1	Hose-Fuel
26	110-6187	1	Hose-Fuel
27	112-6388	1	Hose-Fuel
28	99-5000	1	Valve-Check, Fuel
29	92-2379	14	Clamp-Hose
31	32180-118	1	Clip-Tie
32	112-2401	1	Pad-Rubber
33	92-6064	1	Clamp-R
34	32144-4	1	Screw-HWH
35	3229-2	4	Screw-CARR
36	1-803037	6	Nut-Retaining
37	145-0609	1	Decal-Toro Logo
38	139-1937	1	Reflector-Red
39	147-6708	1	Decal-Tx1000 Turbo
45	32128-33	2	Nut-HF
46	MSC14544	1	Grommet

Fuel Tank Assembly No. 145-4466

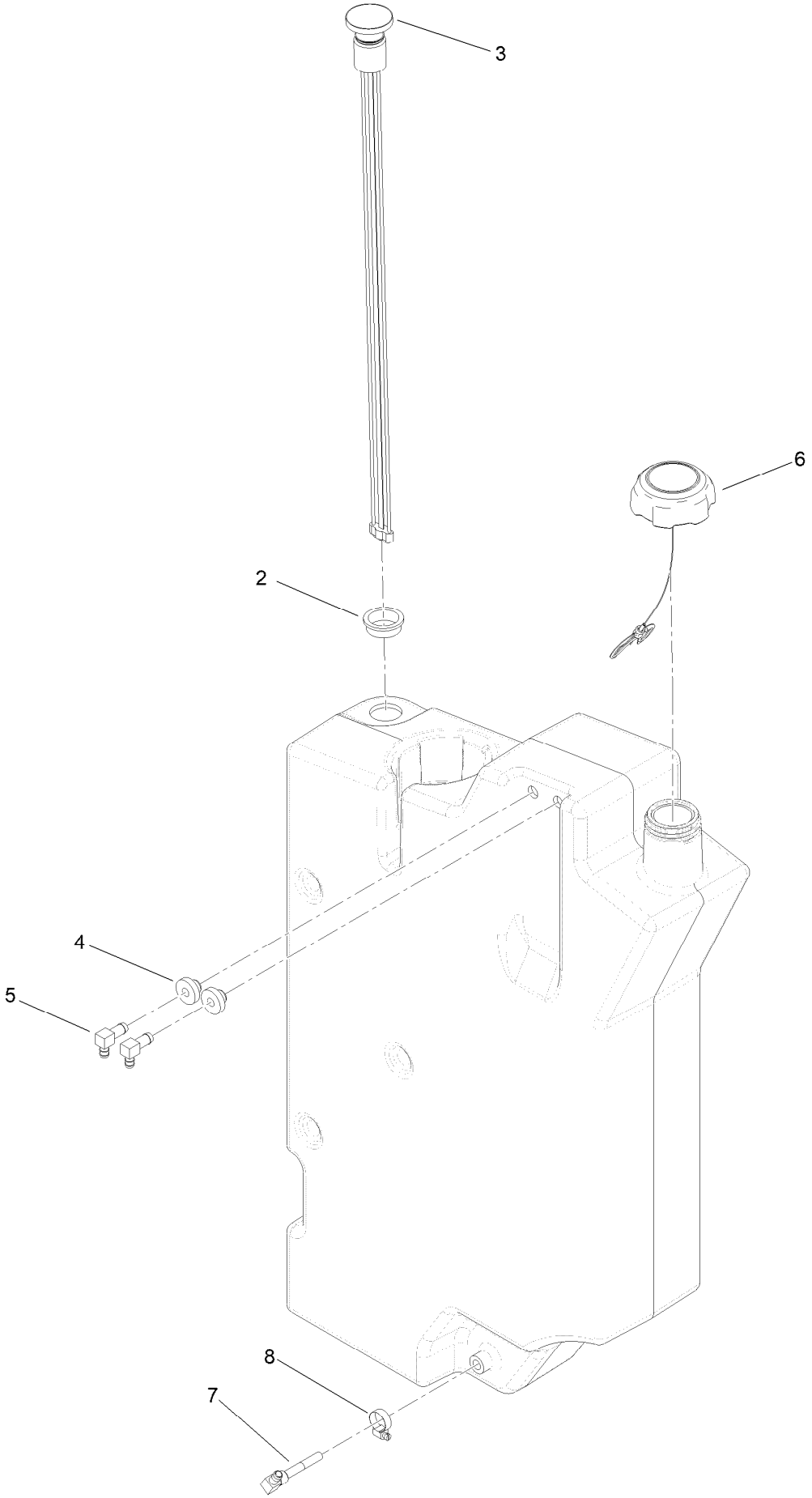

Fuel Tank Assembly No. 145-4466 (continued)

Ref.	Part Number	Qty.	Description
2	95-8972	1	Grommet
3	133-6992	1	Gauge-Level, Fuel
4	46-6560	2	Bushing
5	46-6550	2	Fitting-Elbow, 90 DEG
6	144-4373	1	Cap-Diesel
7	115-4518	1	Pipe-Stand
8	2412-36	1	Clamp-Hose

Cooling System Assembly

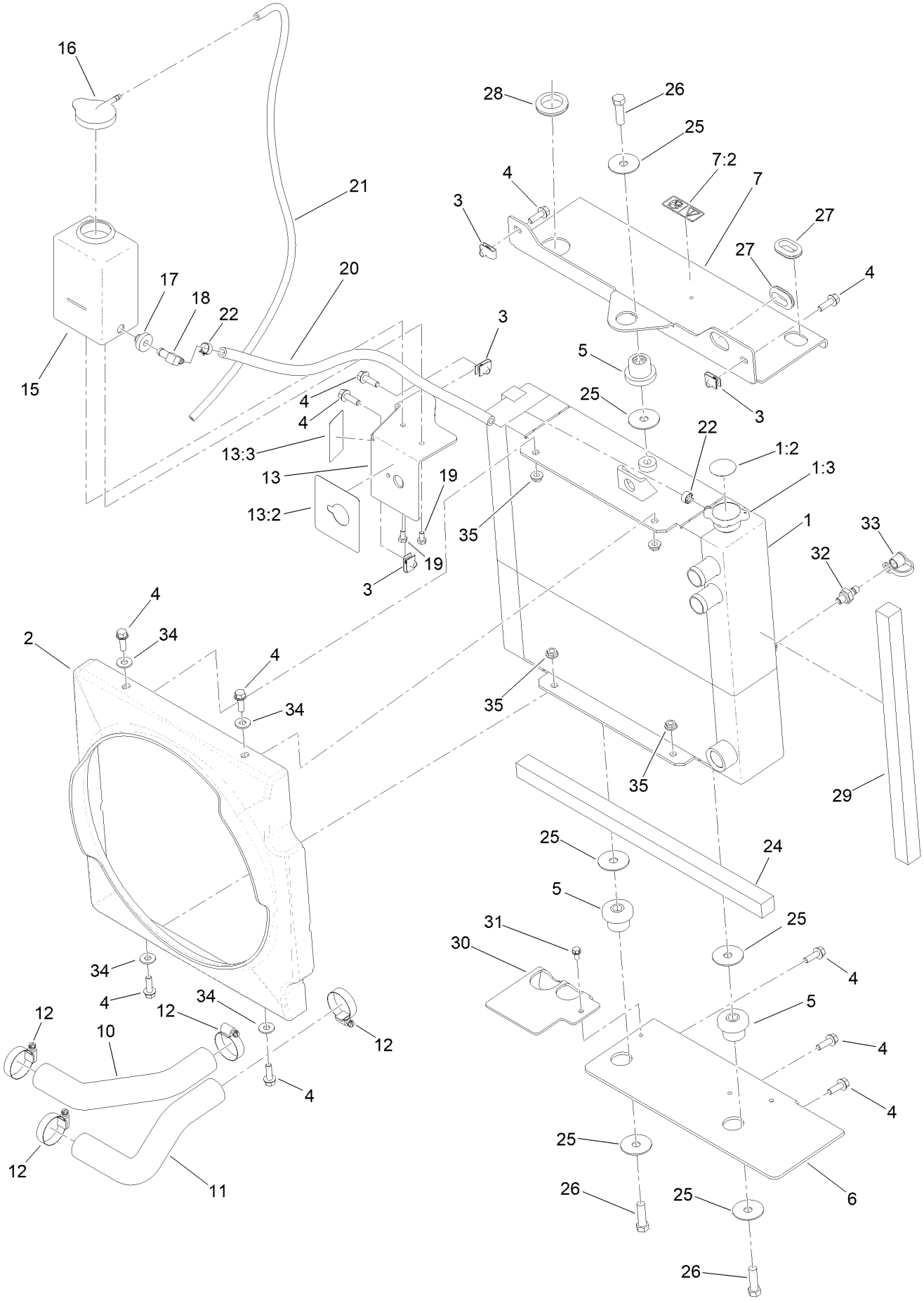

Cooling System Assembly (continued)

Ref.	Part Number	Qty.	Description
1	163-7845	1	Cooler ASM
1:2	106-6755	1	Decal-Cap, Radiator
1:3	163-7797	1	Cap - Radiator
2	144-4423	1	Shroud-Cooler
3	115-7721	4	Nut-Clip, U
4	3234-29	11	Screw-HHF
5	119-1422	3	Mount-Isolator
6	163-1165-03	1	Plate-Mount, Cooler
7	147-6701	1	Bracket-Cooler
7:2	127-0392	1	Decal-Hot Surface
10	145-4527	1	Hose-Radiator, Upper
11	145-4528	1	Hose-Radiator, Lower
12	2412-111	4	Clamp-Hose, W/Liner
13	163-1176	1	Bracket-Bottle
13:2	131-8026	1	Decal-Battery Disconnect
13:3	147-6709	1	Decal-Warning, Fan
15	1-643163	1	Tank-Overflow
16	1-643164	1	Cap-Tank, Overflow

Ref.	Part Number	Qty.	Description
17	46-6560	1	Bushing
18	46-6550	1	Fitting-Elbow, 90 DEG
19	321-2	2	Screw-HH
20	108-3284	1	Hose-Fuel
21	108-6344	1	Hose-Fuel
22	92-2379	2	Clamp-Hose
24	145-4549	2	Foam-Radiator
25	147-6703	6	Washer
26	324-6	3	Screw-HH
27	240-5	2	Grommet
28	240-3	1	Grommet-Rubber
29	147-6700	2	Foam-Radiator
30	147-6732	1	Baffle-Air
31	32144-4	1	Screw-HWH
32	99-4443	1	Fitting
33	354-79	1	Cap-Dust
34	3256-3	4	Washer-Flat
35	32128-20	4	Nut-HF

Principal Hydraulics Assembly

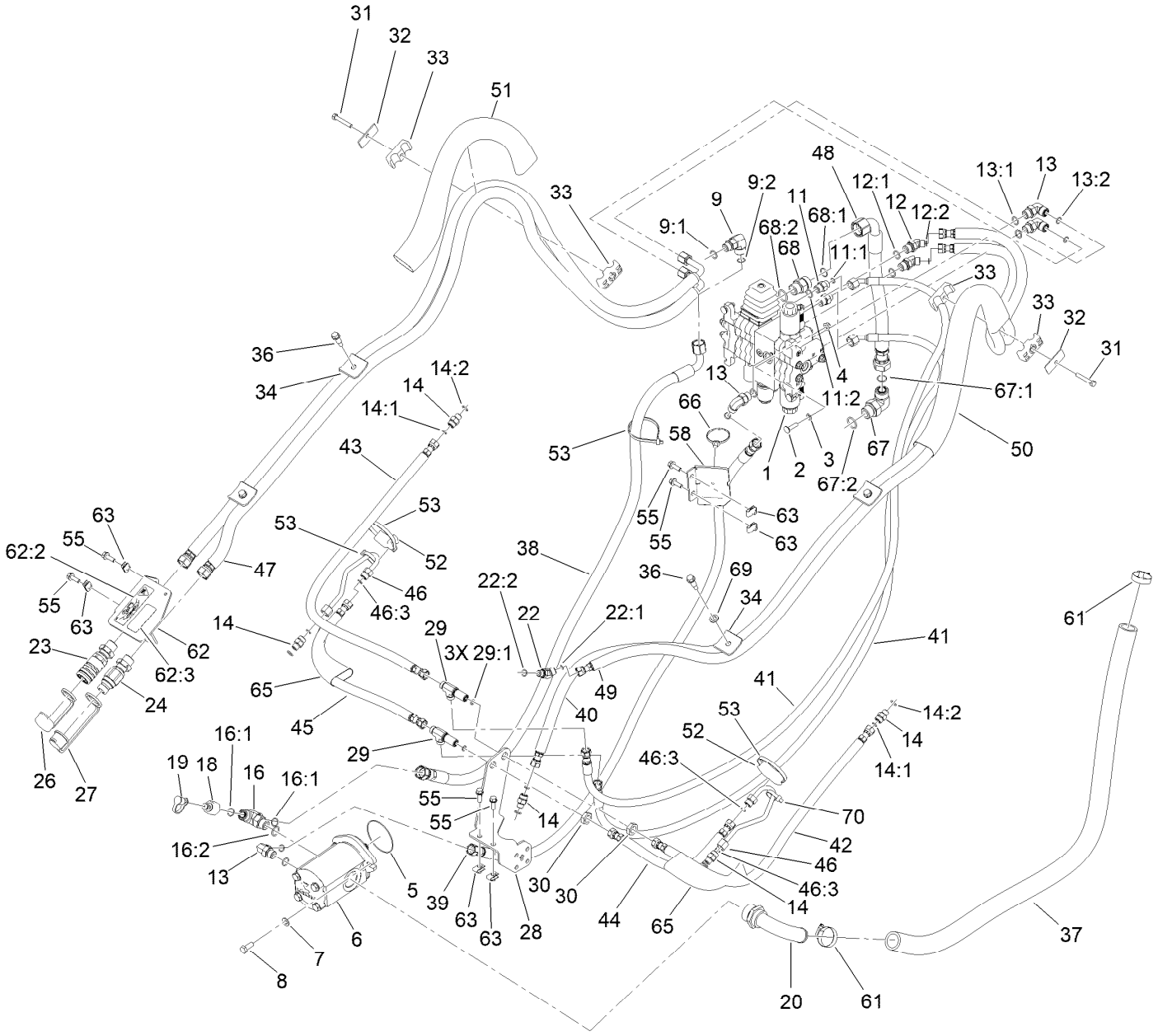

Principal Hydraulics Assembly (continued)

Ref.	Part Number	Qty.	Description
1	147-6888	1	Valve-Loader
2	3230-3	3	Screw-CARR
3	109-5667	3	Nut-Push
4	119-4041	3	Nut-HF
5	353-949	1	O-Ring
6	145-4384	1	Pump-Gear
7	33095-00	2	Washer-Flat
8	33115-025	2	Screw-HH
9	340-153	1	Fitting-Elbow, 90 DEG
9:1	237-79	1	O-Ring
9:2	237-151	1	O-Ring
11	340-3	2	Fitting-Straight
11:1	237-22	1	O-Ring
11:2	237-79	1	O-Ring
12	340-138	2	Fitting-HYD, 45 DEG
12:1	237-79	1	O-Ring
12:2	237-22	1	O-Ring
13	340-98	4	Fitting-Elbow, 90 DEG
13:1	237-79	1	O-Ring
13:2	237-30	1	O-Ring
14	340-2	5	Fitting-Straight
14:1	237-22	1	O-Ring
14:2	237-42	1	O-Ring
16	340-93	1	Tee-Adapter
16:1	237-65	2	O-Ring
16:2	237-80	1	O-Ring
18	86-5860	1	Nipple
19	354-79	1	Cap-Dust
20	147-6805	1	Elbow-90DEG
22	340-87	1	Fitting-Elbow, 45 DEG
22:1	237-22	1	O-Ring
22:2	237-42	1	O-Ring
23	139-4798	1	Coupler ASM,Bulkhead,
24	139-4799	1	Coupler ASM,Bulkhead,
26	100-8816	1	Cap-Dust, Coupler
27	100-8815	1	Cap-Dust, Nipple
28	145-4328-03	1	Bracket-Bulkhead
29	340-68	2	Fitting-Tee, Bulkhead
29:1	237-22	3	O-Ring
30	340-70	2	Nut-Lock
31	322-11	2	Screw-HH
32	69-9761	2	Plate-Cover
33	94-8105	4	Clamp-Tube
34	145-4534	4	Plate-Hold Down
36	140-3759	4	Bolt-Shoulder,HHF
37	145-4383	1	HYD Hose
38	145-4376	1	HYD Hose ASM
39	145-4370	1	HYD Hose ASM
40	145-4371	1	HYD Hose ASM
41	145-4372	2	HYD Hose ASM
42	145-4361	1	HYD Hose ASM
43	145-4362	1	HYD Hose ASM
44	145-4363	1	HYD Hose ASM
45	145-4364	1	HYD Hose ASM
46	140-5724	2	Tube-HYD
46:3	237-22	1	O-Ring
47	145-4375	2	HYD Hose ASM
48	163-7853	1	Hose ASM-HYD
49	145-4489	1	HYD Hose ASM
50	100-6128	1	Sleeve-Protective
51	130-7718	1	Sleeve-Protective
52	137-0146	2	Block-Hardline
53	3334-945	3	Tie-Cable
55	3234-29	6	Screw-HHF
58	145-4540-0P	1	Bracket-Guide, Hose
61	163-7710	2	Clamp-Hose, Lined
62	145-4478	1	Bracket ASM-Qc
62:2	115-4855	1	Decal-Caution
62:3	139-1173	1	Decal-Warning
63	115-7721	6	Nut-Clip, U
65	133-8568	2	Sleeve-Protective
66	32180-118	1	Clip-Tie
67	340-142	1	Fitting-Elbow, 90 DEG
67:1	237-58	1	O-Ring
67:2	237-81	1	O-Ring
68	340-9	1	Fitting-STR
68:1	237-58	1	O-Ring
68:2	237-81	1	O-Ring
69	133-4553	2	Spacer-Bearing
70	3290-378	2	Tie-Cable

Hydraulic Loader Valve Assembly No. 147-6888

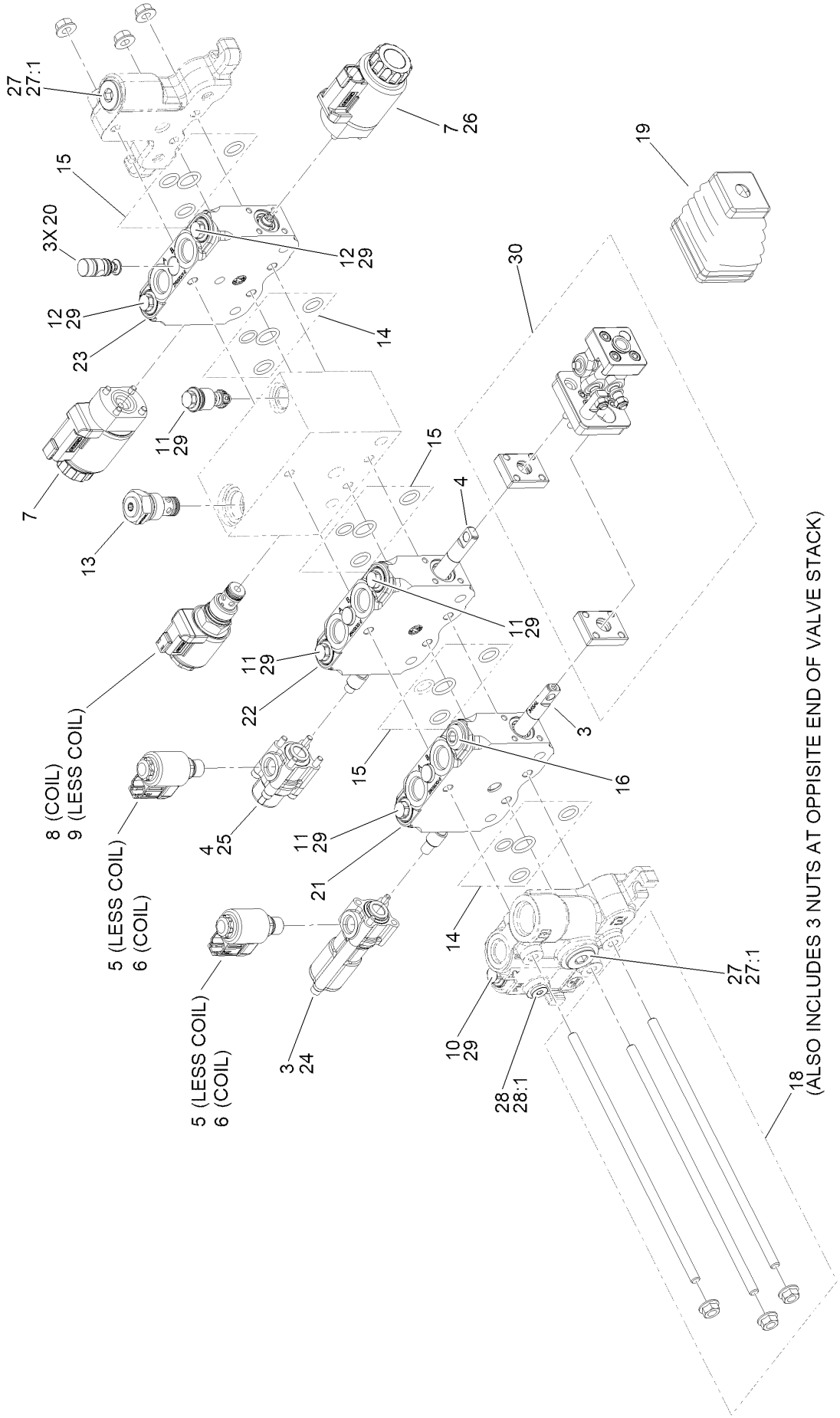

Hydraulic Loader Valve Assembly No. 147-6888 (continued)

Ref.	Part Number	Qty.	Description
3	163-3060	1	Spool Control
4	163-3061	1	Spool Control
5	163-3062	1	Valve-Lock
6	145-2568	1	Coil 12Dn01-32-1329
7	163-1185	2	Spool Control
8	163-1186	1	Valve-Solenoid
9	163-1187	1	Valve-Solenoid
10	163-1188	1	Valve-Relief, Main
11	163-1189	4	Valve-Relief
12	163-1190	2	Valve-Relief
13	163-1191	1	Valve-Check
14	163-1192	2	Kit-Seal
15	163-1193	3	Kit-Seal
16	163-1194	1	Plug-Cavity
18	163-1196	1	Kit-Tie Rod

Ref.	Part Number	Qty.	Description
19	164-1405	1	Boot-Joystick
20	164-1406	3	Valve-Load Check
21	164-1408	1	Valve ASM-Section 1, W Sl
22	164-1410	1	Valve ASM-Section 2, W Sl
23	164-1411	1	Valve ASM-Section 3
24	164-1413	1	Spool 11T Sl Mounting Bolts
25	164-1415	1	Spool 9 Sl Mounting Bolts
26	164-1416	2	Spool E1D Mounting Bolts
27	353-551	3	Plug-HH
27:1	237-80	1	O-Ring
28	353-990	1	Plug ASM
28:1	237-78	1	O-Ring
29	164-1417	6	Tbs110 Replacement Seal
30	164-1418	1	Kit-Joystick W/Sl

Controls Assembly

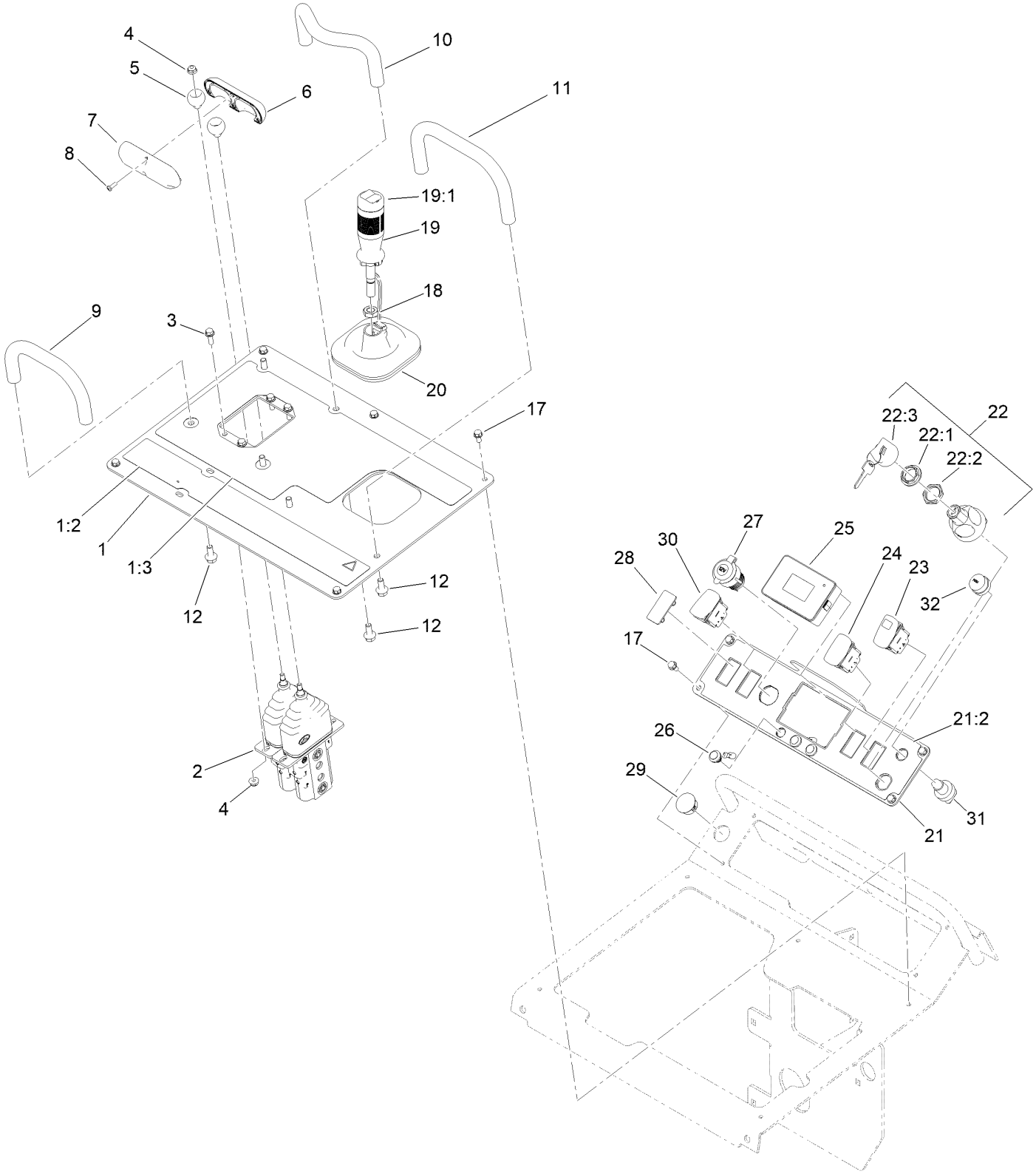

Controls Assembly (continued)

Ref.	Part Number	Qty.	Description
1	145-4479	1	Plate ASM-Controls
1:2	147-6765	1	Decal-Safety
1:3	163-1173	1	Decal-Controls
2	145-3279	1	Valve-Control (Traction)
3	115-5103	4	Screw-HHF
4	104-7201	6	Nut-HF, NI
5	130-7723	2	Ball-Traction
6	130-7692	1	Handle-Control
7	131-9162	1	Handle-Traction
8	94-6961	4	Screw
9	112-2620	1	Bar-Reference
10	138-0791	1	Bar-Reference
11	145-4760	1	Bar-Reference
12	3234-47	6	Screw-HHF
17	32144-4	9	Screw-HWH
18	51-2070	1	Nut
19	164-3532	1	Handle-Auxiliary ASM
19:1	147-6873	1	Boot-Switch, Joystick
20	145-4746	1	Boot-Joystick

Ref.	Part Number	Qty.	Description
21	163-1178	1	Plate-Switch
21:2	163-1161	1	Decal-Console
22	161-4693	1	Switch-Ignition
22:1	121-5160	1	Nut-Hex
22:2	122-2704	1	Nut-Face, M22 (Plastic)
22:3	121-5162	1	Set-Key, Ignition
23	122-3953	1	Switch-Rocker, (On)-Off-(On)
24	122-3203	1	Switch-Rocker,(On)-Off-(On)
25	122-1201	1	Module-Display
26	136-9678	3	Cable Assy-Pushbutton
27	109-9376	1	Receptacle-12V
28	99-7420	1	Plug-Hole
29	127-1842	1	Plug-Dome, Thick
30	122-3145	1	Switch-Rocker, On - None - On
31	112-3324	1	Switch-Horn
32	112-3313	1	Nut-Weatherproof

Control Valve Assembly No. 145-3279

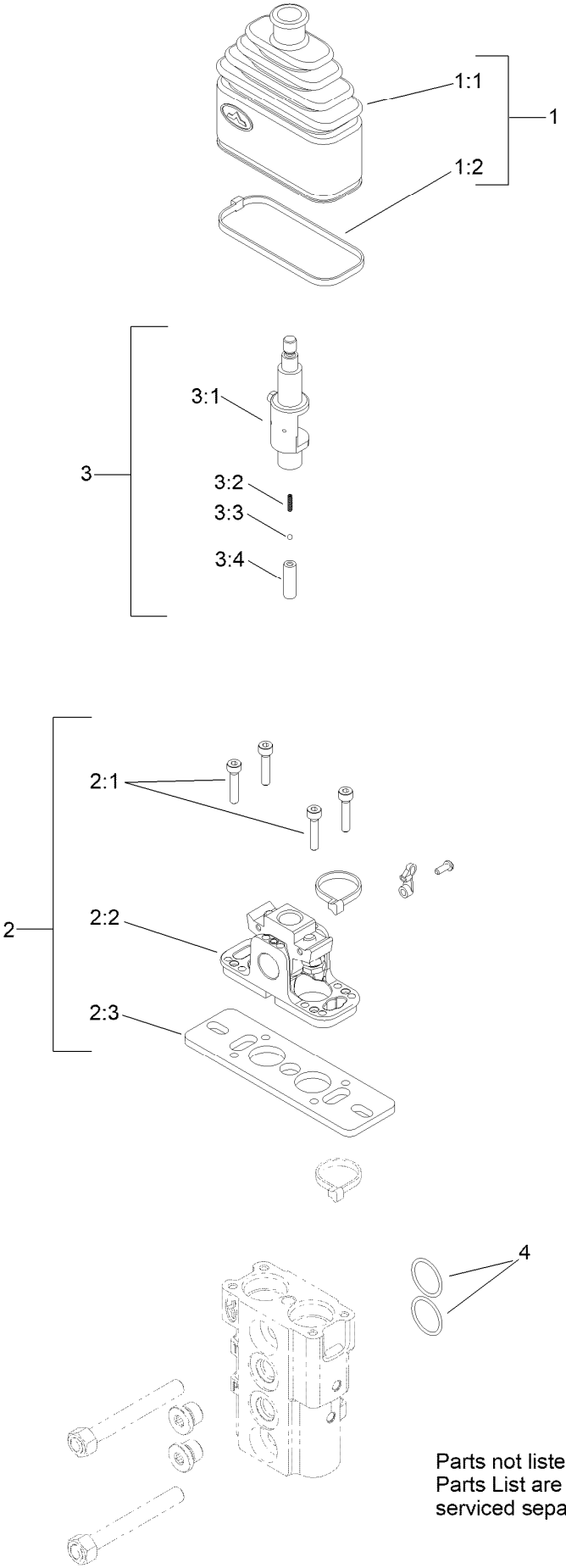

Parts not listed in Parts List are not serviced separately

Control Valve Assembly No. 145-3279 (continued)

Ref.	Part Number	Qty.	Description
1	132-6034	2	Bellow Kit
1:1		1	Bellow-Rubber ●
1:2		1	Tie-Cable ●
2	132-6036	2	Fulcrum Kit
2:1		4	Screw ●
2:2		1	Support Kit ●
2:3		1	Plate-Mounting ●

Ref.	Part Number	Qty.	Description
3	132-6037	2	Switch Holder Lever Kit
3:1		1	Lever-Holder, Switch ●
3:2		1	Spring-Return ●
3:3		1	Sphere ●
3:4		1	Holder-Spring ●
4	100-7246	2	O-Ring

● Not serviced separately

Loader Arm Assembly

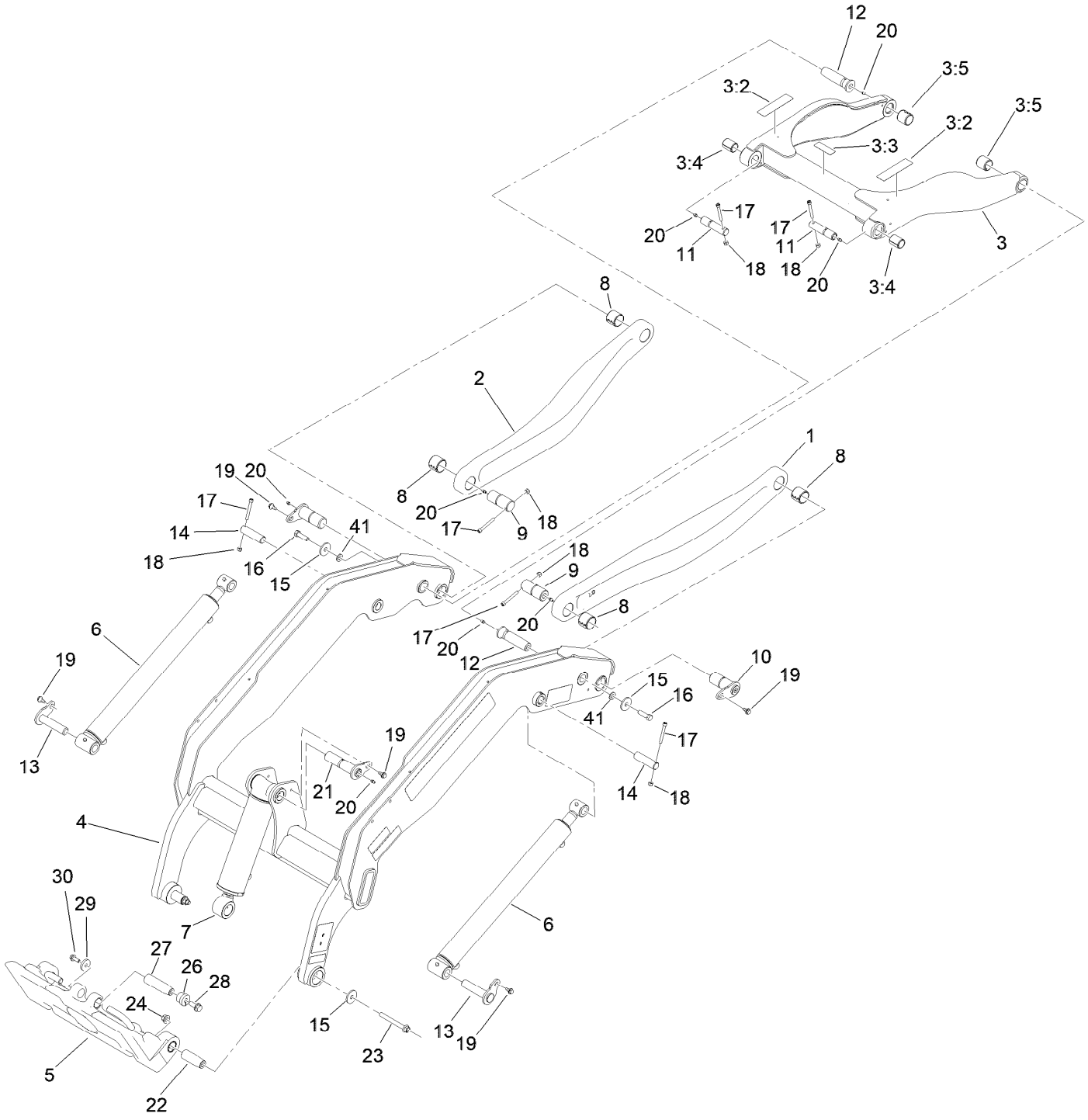

Loader Arm Assembly (continued)

Ref.	Part Number	Qty.	Description
1	147-6797	1	Link-Lower, LH
2	147-6799	1	Link-Lower, RH
3	145-4314	1	Upper Link ASM-Loader
3:2	139-1158	2	Decal-Warning
3:3	120-0625	1	Decal-Warning
3:4	130-5200	2	Bushing-Spring
3:5	139-5737	2	Bushing-Spring
4	145-4307	1	Loader Arm ASM-Wt
5	140-6017	1	Attachment Plate ASM
6	140-7634	2	Cylinder HYD (2.25X20.16 Double Action)
7	147-6889	1	CYL-HYD
8	130-5199	4	Bushing-Spring
9	125-3748	2	Pin-Arm
10	136-4708	2	Pin-Pivot
11	125-3695	2	Pin-Link
12	145-4312	2	Pin-Taper
13	147-6705	2	Pin-Flag
14	130-5178	2	Pin-Pivot
15	106-2008	4	Washer-Case Hard
16	121-1524	2	Screw-HH
17	3274-40	6	Screw-HSH
18	3296-29	6	Nut-Lock, NI
19	99-5105	5	Screw-Shoulder
20	302-5	9	Fitting-Grease
21	137-0134	1	Flag Pin ASM
22	140-6019	2	Pin-Link,Taper
23	117-3176	2	Screw-HHF
24	139-1689	2	Nut-HF
26	181-1002	1	Insert-Tapered
27	140-6076	1	Pin-Tapered
28	137-4653	1	Screw-HHF
29	1-543610	1	Washer-Flat
30	3234-42	1	Screw-HHF
41	106-9888	2	Washer-Flat

Loader Arm Assembly No. 145-4307

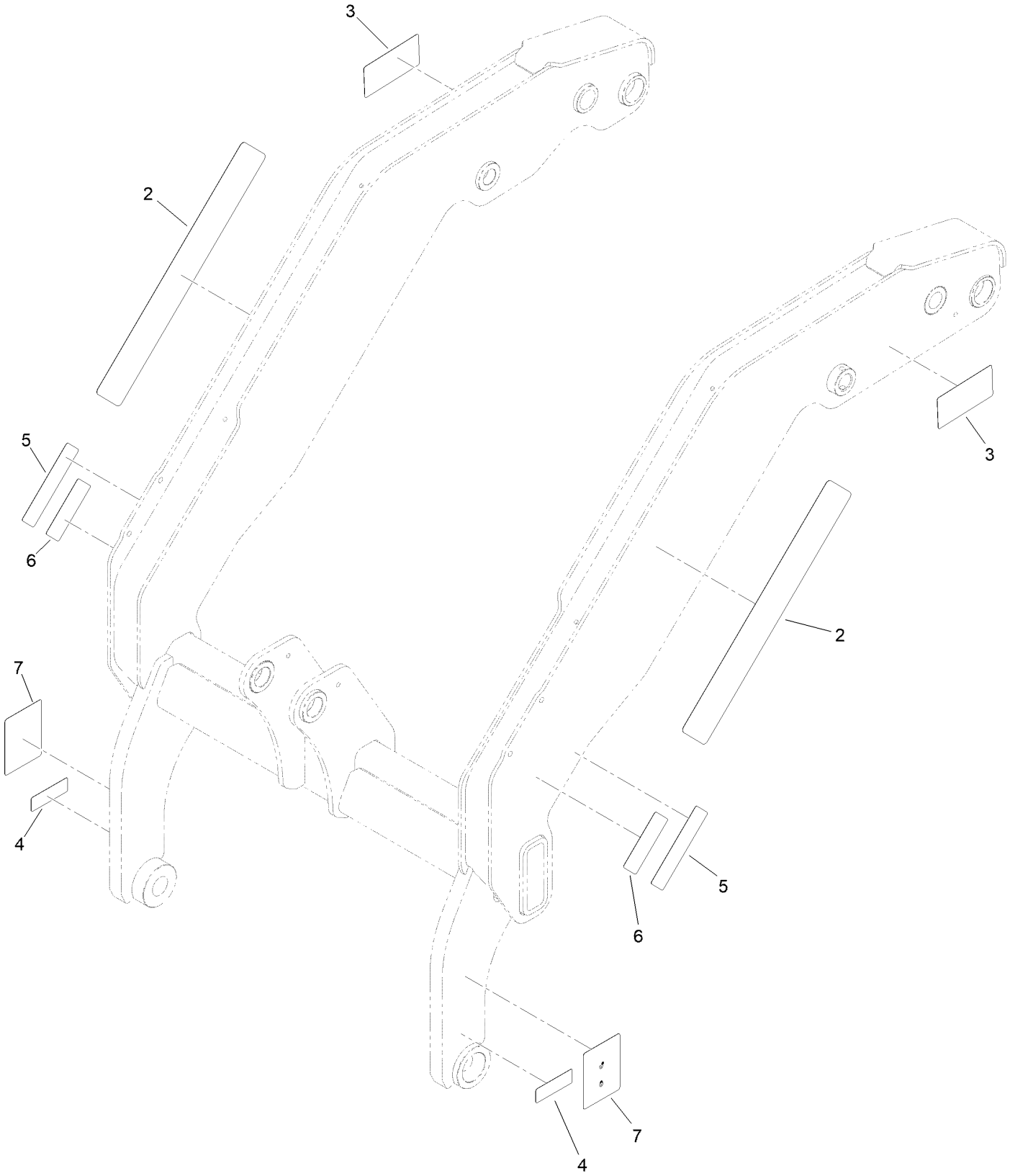

Loader Arm Assembly No. 145-4307 (continued)

Ref.	Part Number	Qty.	Description
2	163-1207	2	Decal-Vertical Lift, Red
3	131-0711	2	Decal-Warning
4	120-0625	2	Decal-Warning
5	139-1158	2	Decal-Warning
6	139-1159	2	Decal-Warning
7	145-3252	2	Decal - Warning, Bucket

Attachment Plate Assembly No. 140-6017

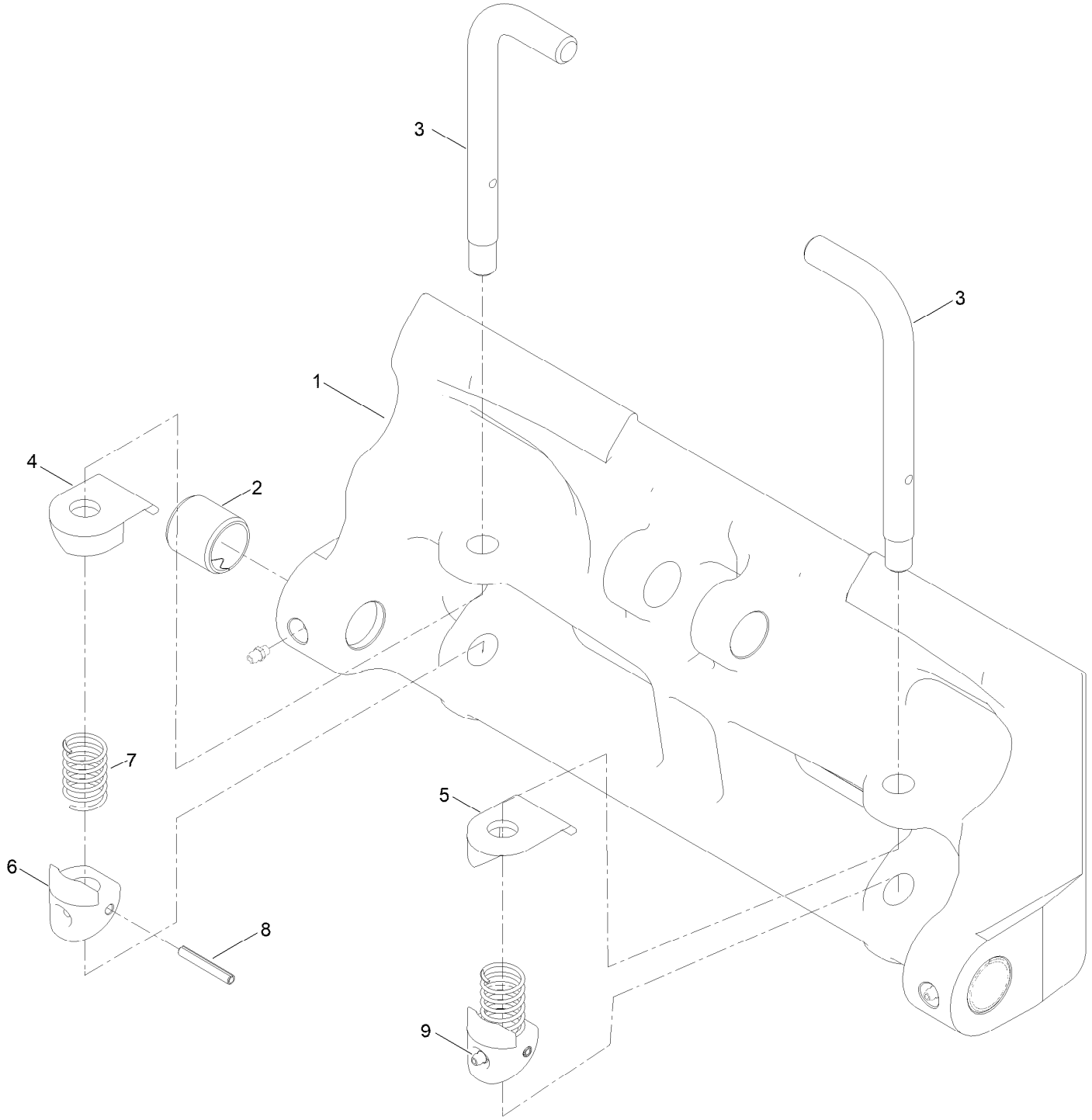

Attachment Plate Assembly No. 140-6017 (continued)

Ref.	Part Number	Qty.	Description
1	140-5992	1	Qtach
2	147-6875	2	Bushing-Spring
3	163-1160	2	Pin-Locking
4	140-5983	1	Stop-Pin, LH
5	140-5991	1	Stop-Pin, RH
6	140-5981	2	Cam-Qtach
7	100-9782	2	Spring-Compression
8	32121-32	2	Pin-Roll
9	302-5	4	Fitting-Grease

Hydraulic Cylinder Assembly No. 140-7634

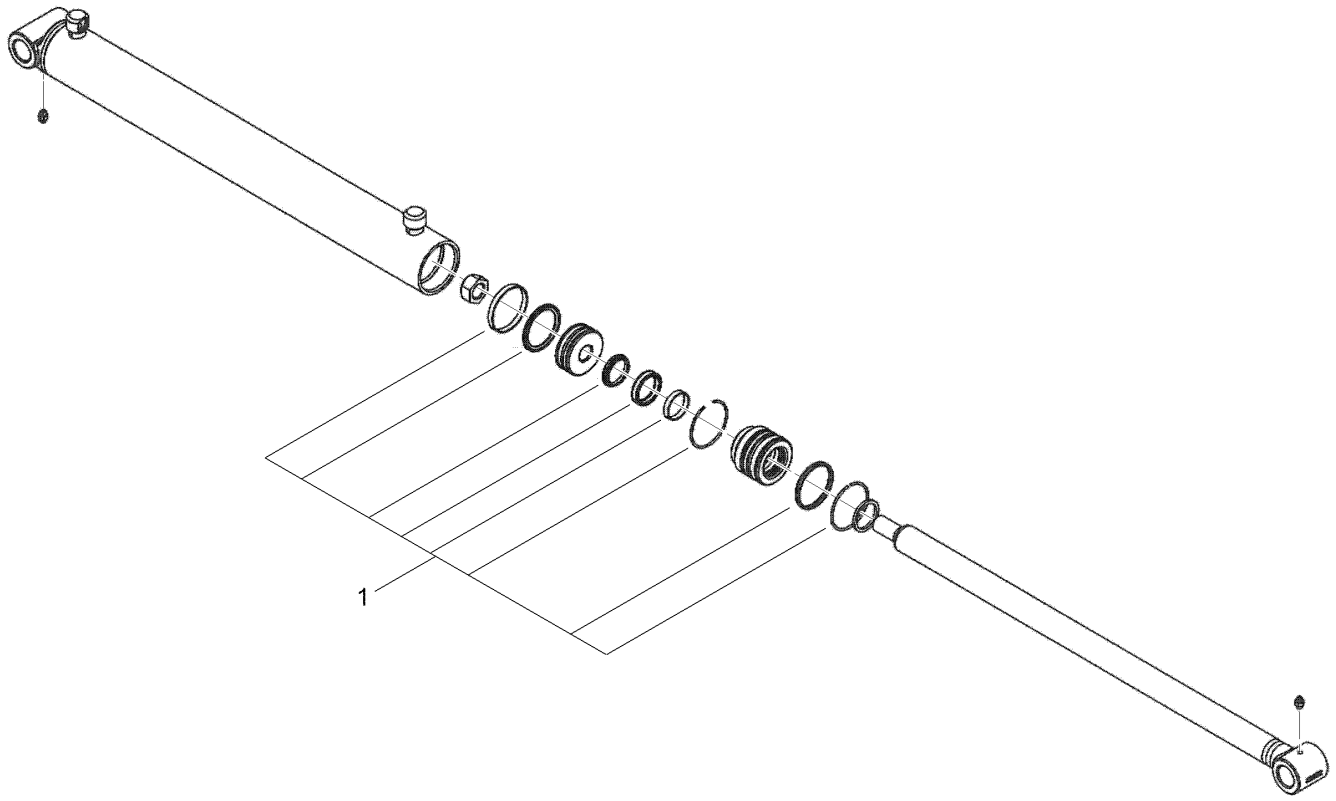

Hydraulic Cylinder Assembly No. 140-7634 (continued)

Ref.	Part Number	Qty.	Description
1	140-5309	1	Kit-Seal, Hydraulic CYL

Hydraulic Cylinder Assembly No. 147-6889

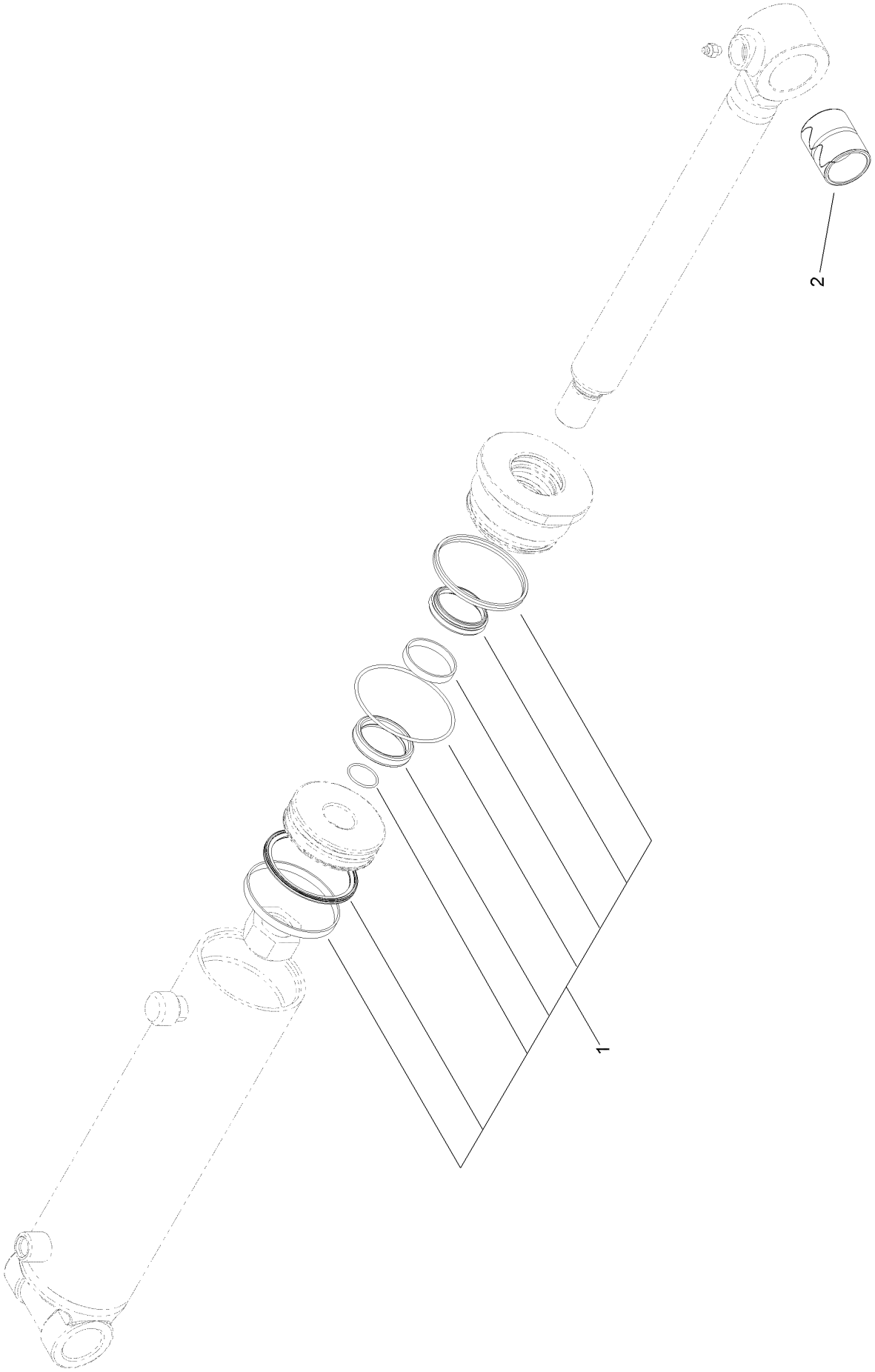

Hydraulic Cylinder Assembly No. 147-6889 (continued)

Ref.	Part Number	Qty.	Description
1	137-5209	1	Seal Repair Kit
2	147-6875	1	Bushing-Spring

Platform Assembly

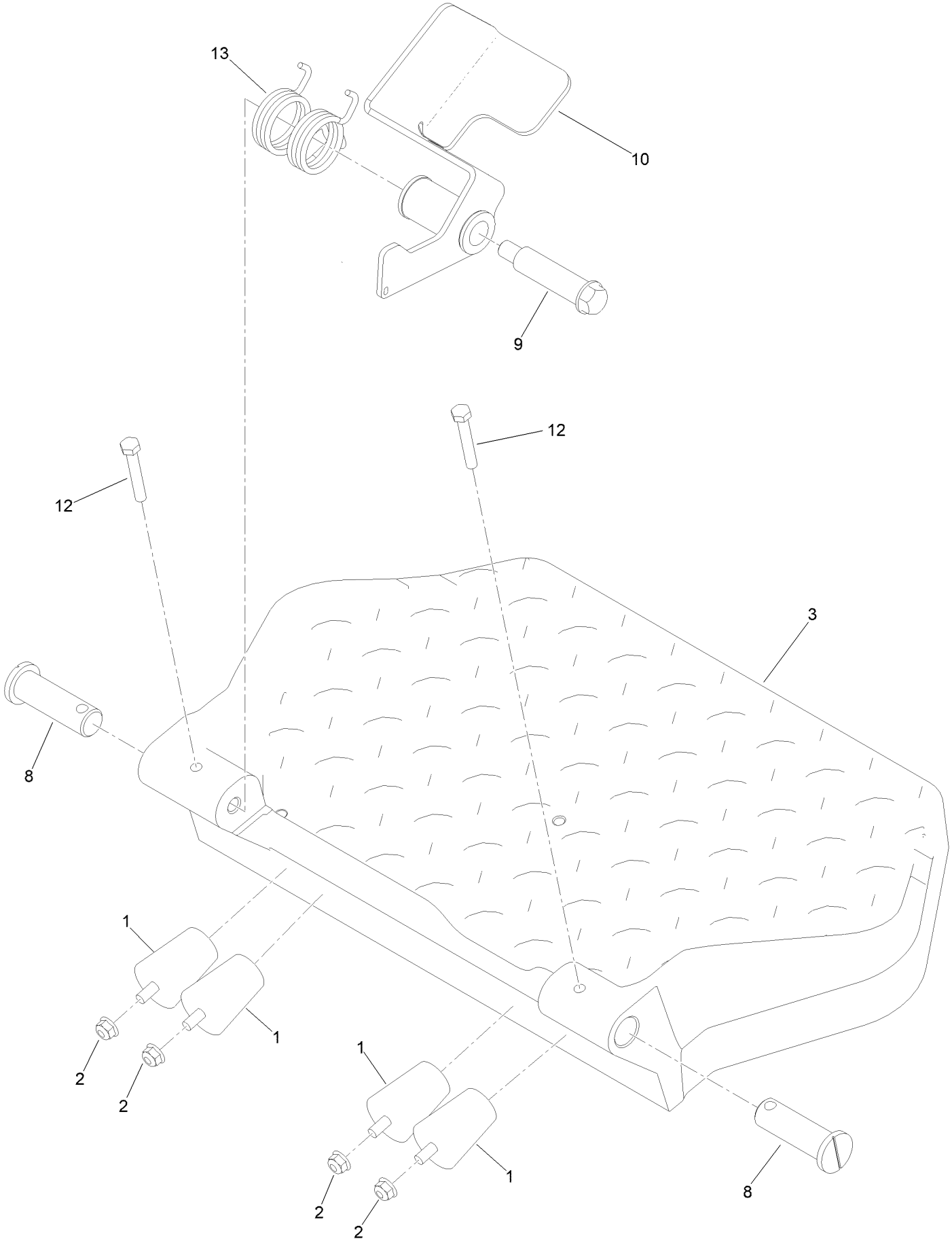

Platform Assembly (continued)

Ref.	Part Number	Qty.	Description
1	110-5070	4	Bumper
2	119-4041	4	Nut-HF
3	147-9003-05	1	Operator Platform [blk-Txt]
8	147-6772	2	Pin-Platform
9	126-9209	1	Bolt-Shoulder
10	147-6774-05	1	Pedal ASM [blk-Txt]
12	322-10	2	Screw-HH
13	147-6857	1	Spring-Torsion, Twin Coils

Hood and Covers Assembly

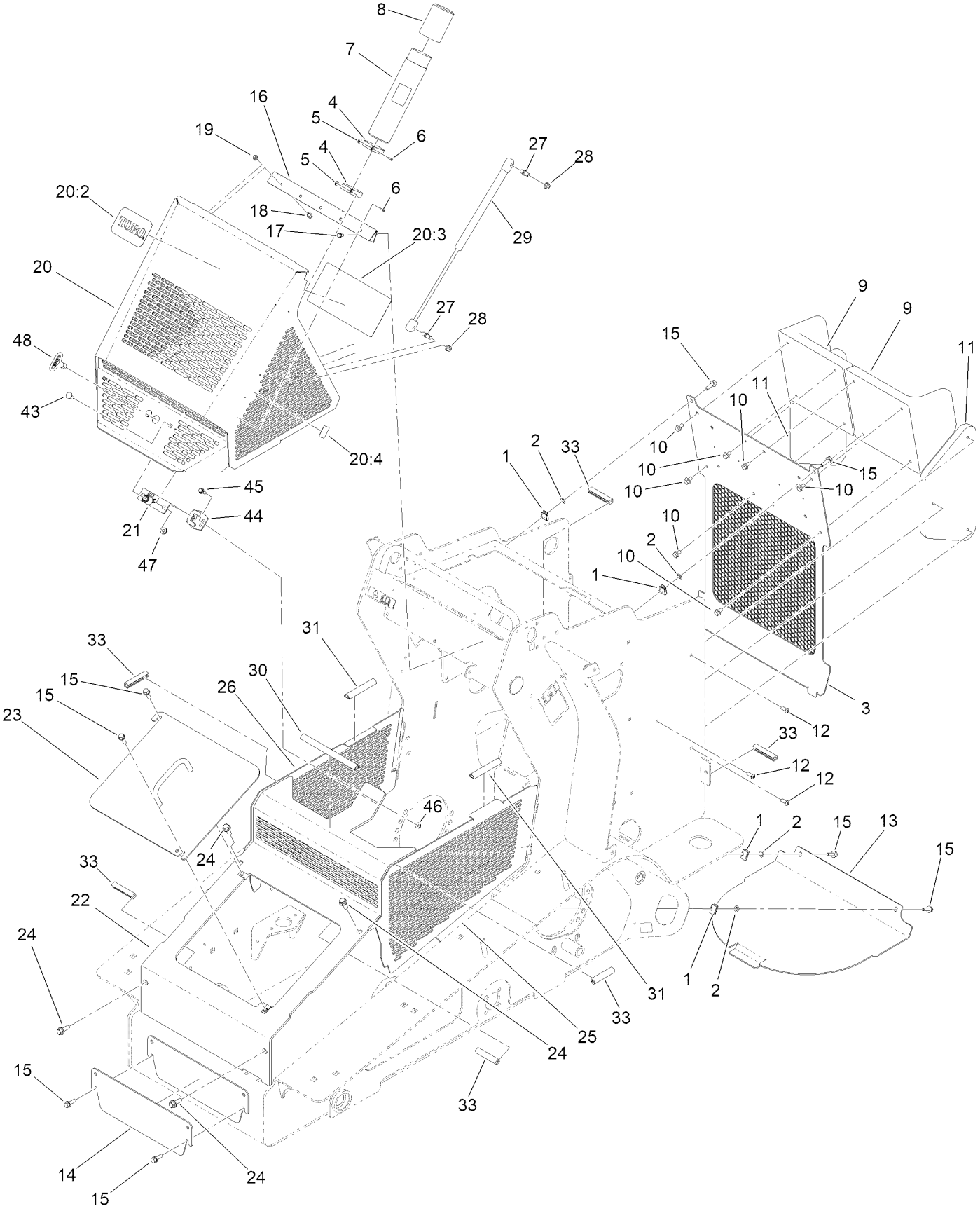

Hood and Covers Assembly (continued)

Ref.	Part Number	Qty.	Description
1	115-7721	6	Nut-Clip, U
2	109-5667	4	Nut-Push
3	144-4365-05	1	Cover-Rear [blk-Txt]
4	2412-120	2	Clamp-R
5	3269-10	2	Washer-Back
6	3269-17	2	Rivet-Pop
7	104-7050	1	Tube-Manual
8	104-7048	1	Cap-Housing
9	140-5943	2	Pad-Operator
10	3234-30	8	Screw-HHF
11	145-4343	2	Pad-Operator, Knee
12	3274-55	6	Screw-HSBH
13	144-4397-01	1	Cover-Access, Bottom
14	144-4352-01	1	Cover-Access, Front
15	3234-29	8	Screw-HHF
16	100-1284	1	Hinge-Hood
17	32144-4	4	Screw-HWH
18	3234-13	5	Screw-HHF
19	104-7201	5	Nut-HF, NI
20	164-1430	1	Hood ASM
20:2	161-6663	1	Decal-Toro Logo
20:3	145-4486	1	Decal-Service Interval
20:4	147-6827	1	Decal-Operator Manual
21	164-3505	1	Latch, Rotary
22	164-3588-05	1	Panel-Cover, Front
23	145-4338-05	1	Cover-Access, Battery [blk-Txt]
24	3234-42	4	Screw-HHF
25	147-6821-05	1	Cover-Side, LH
26	147-6822-05	1	Cover-Side, RH
27	98-3104	2	Stud-Ball
28	119-4041	2	Nut-HF
29	147-6766	1	Spring-Gas
30	140-5942	1	Seal-Bulb
31	138-2449	2	Seal-Bulb
33	70-2041	6	Trim - Edge
43	116000	2	Bolt-CARR
44	164-1494	1	Striker, Plate
45	120-9678	2	Screw-HHF
46	32128-33	2	Nut-HF
47	32128-20	2	Nut-HF
48	164-3507	1	Key

Electrical Assembly

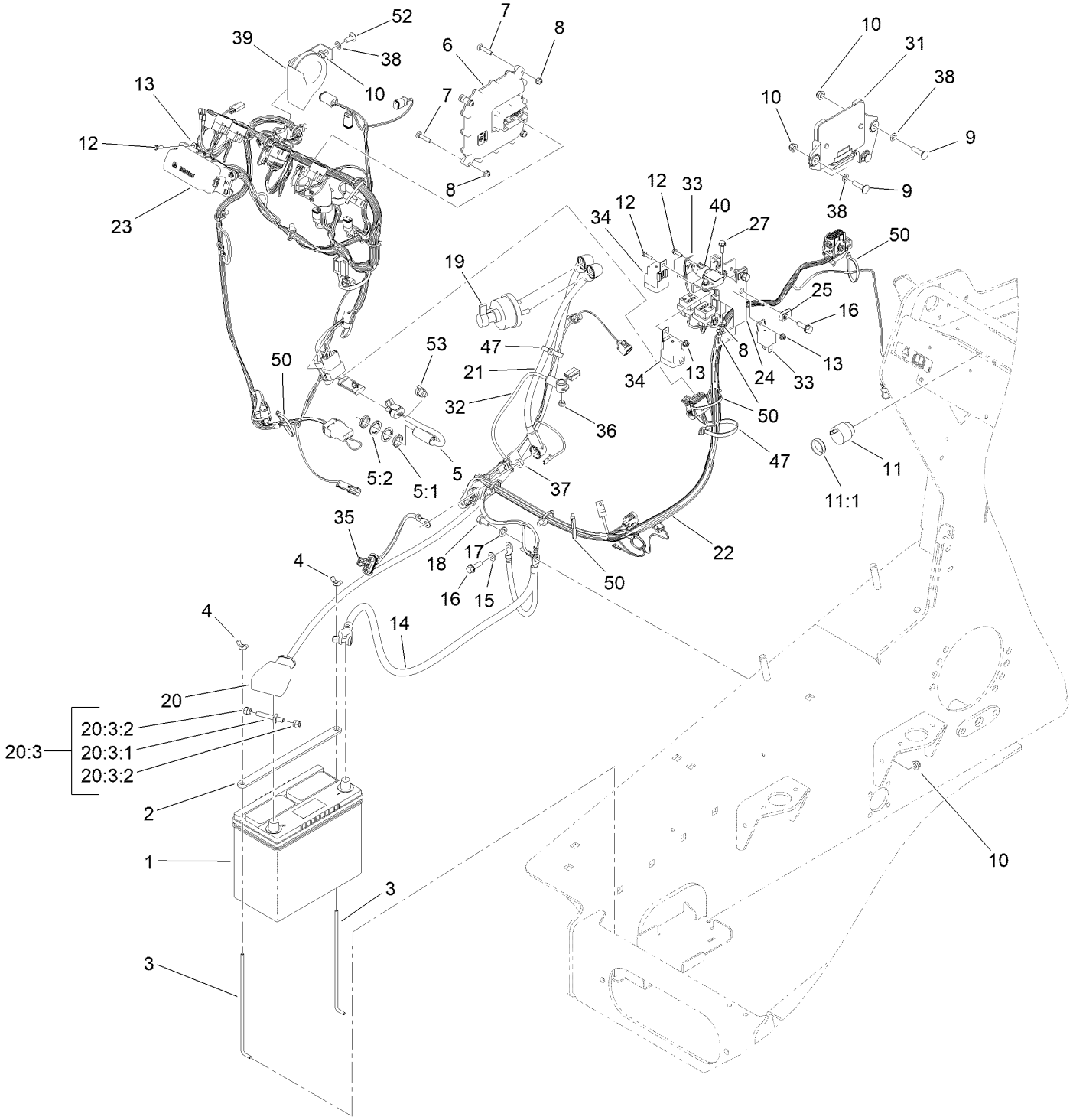

Electrical Assembly (continued)

Ref.	Part Number	Qty.	Description
1	140-5760	1	Battery- Wet, 12V, 450 CCA
2	145-4426-03	1	Plate-Hold Down, Battery
3	136-5756	2	Rod-Hold Down, Battery
4	1-803038	2	Wingnut
5	115-5300	1	Proximity Sensor ASM
5:1	117-3207	2	Nut-Hex
5:2	117-3208	2	Washer-Lock, Internal Tooth
6	127-2770	1	Controller
7	3229-3	4	Screw-CARR
8	104-7201	6	Nut-HF, NI
9	3230-3	3	Screw-CARR
10	119-4041	5	Nut-HF
11	80-9330	1	Audio Alarm ASM
11:1	104-5107	1	Nut-Plastic, Knurled
12	32105-13	6	Screw-HWH
13	120-4578	6	Nut-HF
14	105-0115	1	Cable-Battery, Negative
15	120-9683	1	Washer-Plain
16	3234-29	3	Screw-HHF
17	33095-00	1	Washer-Flat
18	33115-020	1	Screw-HH
19	AUR52278	1	Switch-Disconnect, Master
19:1	3253-21	2	Washer-Lock ●
19:2	126-0687	2	Nut-Hex ●
19:3	515-0040	1	Washer,Lock,Int,.91X1.387X.056,Stl,Rohs ●

Ref.	Part Number	Qty.	Description
20	122-2244	1	Cable-Battery, Rd ASM
20:3	112-9921	1	Bolt ASM
20:3:1	32180-107	1	Bolt-Clamp, Battery
20:3:2	32180-108	2	Nut-Hex Shoulder
21	122-2245	1	Cable-Battery, Rd ASM
22	122-3951	1	Harness-Wire, Engine
23	122-3952	1	Harness-Wire, Main
24	163-1162-0P	1	Bracket-Relay
25	115-7721	2	Nut-Clip, U
27	115-5103	2	Screw-HHF
31	144-4448	1	Controller-Engine
32	100-5552	1	Harness-Wire
33	99-7435	2	Relay
34	99-7430	2	Relay-Mini
35	99-3441	1	Harness-Wire, Fusible Link
36	33003-00	1	Nut-HF
37	33004-00	1	Nut-HF
38	109-5667	4	Nut-Push
39	116749	1	Horn
40	126-9261	1	Sensor-Atm
47	3334-945	2	Tie-Cable
50	3290-378	5	Tie-Cable
52	137-3061	1	Bolt-CARR
53	32180-030	1	Clip-Tie

● Not illustrated

Traction Hydraulics Assembly

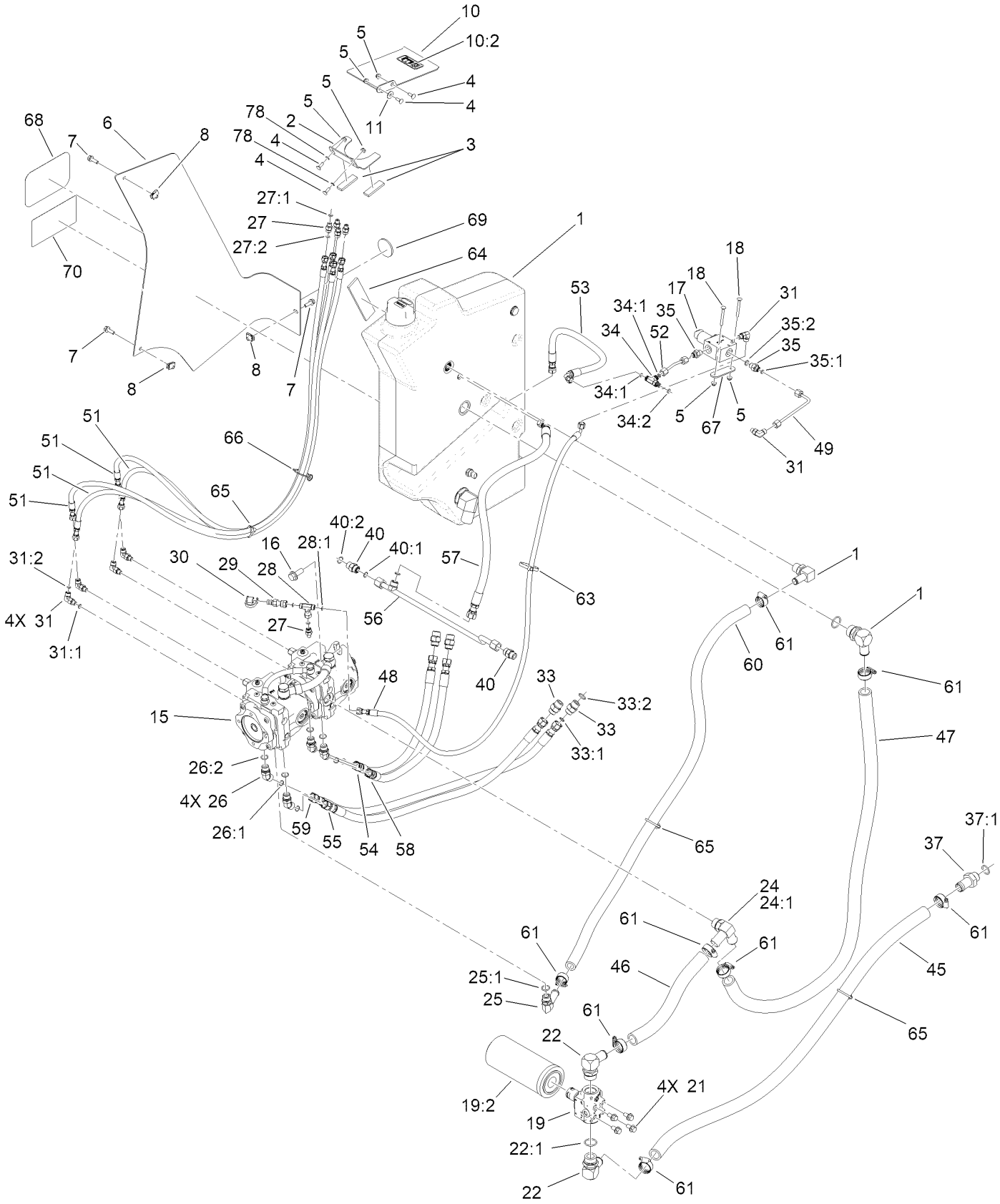

Traction Hydraulics Assembly (continued)

Ref.	Part Number	Qty.	Description
1	145-4467	1	Tank ASM-HYD
2	145-4429-03	1	Bracket-Tank, Hold Down
3	145-4430	2	Pad-Foam
4	3229-1	4	Screw-CARR
5	104-7201	6	Nut-HF, NI
6	145-4483	1	Tank Cover ASM-HYD
7	3234-29	3	Screw-HHF
8	115-7721	3	Nut-Clip, U
10	145-4482	1	Tank Bracket ASM-HYD
10:2	125-8483	1	Decal-HYD Fluid
11	3290-456	1	Washer-Belleville
15	147-6767	1	Pump-Tandem
16	147-6874	2	Screw-HF
17	145-4324	1	Valve-Proportional Pressure Reducing
18	120-9699	2	Screw-CARR
19	139-1010	1	Filter Head ASM
19:2	94-2621	1	Element-Filter
21	3234-1	4	Screw-HHF
22	23-8910	2	Stem-Barb-90
22:1	237-146	1	O-Ring
24	AU375462A1	1	Connector
24:1	237-81	1	O-Ring
25	87-8170	1	Fitting-90
25:1	237-80	1	O-Ring
26	340-101	4	Fitting-HYD, 45 DEG
26:1	237-30	1	O-Ring
26:2	237-79	1	O-Ring
27	340-92	5	Fitting-Straight
27:1	237-78	1	O-Ring
27:2	237-21	1	O-Ring
28	99-3477	1	Fitting-Tee
28:1	237-21	2	O-Ring
29	115-8886	1	Nipple-Test
30	353-947	1	Cap-Dust, Black
31	340-132	6	Fitting-Elbow, 90 DEG
31:1	237-78	1	O-Ring
31:2	237-21	1	O-Ring
33	340-6	4	Fitting-Straight
33:1	237-30	1	O-Ring
33:2	237-80	1	O-Ring
34	340-140	1	Fitting-Tee
34:1	237-21	2	O-Ring
34:2	237-78	1	O-Ring
35	340-1	2	Fitting-Straight
35:1	237-21	1	O-Ring
35:2	237-42	1	O-Ring
37	99-3017	1	Fitting
37:1	237-81	1	O-Ring
40	340-4	2	Fitting-Straight
40:1	237-30	1	O-Ring
40:2	237-79	1	O-Ring
45	145-4380	1	HYD Hose
46	145-4381	1	HYD Hose
47	145-4382	1	HYD Hose
48	145-4365	1	HYD Hose ASM
49	147-6713	1	HYD Tube ASM
51	145-4368	4	HYD Hose ASM
52	147-6711	1	HYD Tube ASM
53	145-4374	1	HYD Hose ASM
54	145-4377	1	HYD Hose ASM
55	145-4378	1	HYD Hose ASM
56	147-6770	1	HYD Tube ASM
57	147-6769	1	HYD Hose ASM
58	145-4490	1	HYD Hose ASM
59	145-4491	1	HYD Hose ASM
60	145-4492	1	HYD Hose
61	164-1404	8	Clamp-Hose, Lined(1.13-1.56 DIA SS)
63	3334-945	1	Tie-Cable
64	112-2401	1	Pad-Rubber
65	32180-118	3	Clip-Tie
66	32180-139	1	Mount-Tie Wrap, Magnetic
67	147-6790	1	Bracket-Clamp, Valve
68	145-0609	1	Decal-Toro Logo
69	139-1937	1	Reflector-Red
70	147-6708	1	Decal-Tx1000 Turbo
78	1-803037	2	Nut-Retaining

Hydraulic Tank Assembly No. 145-4467

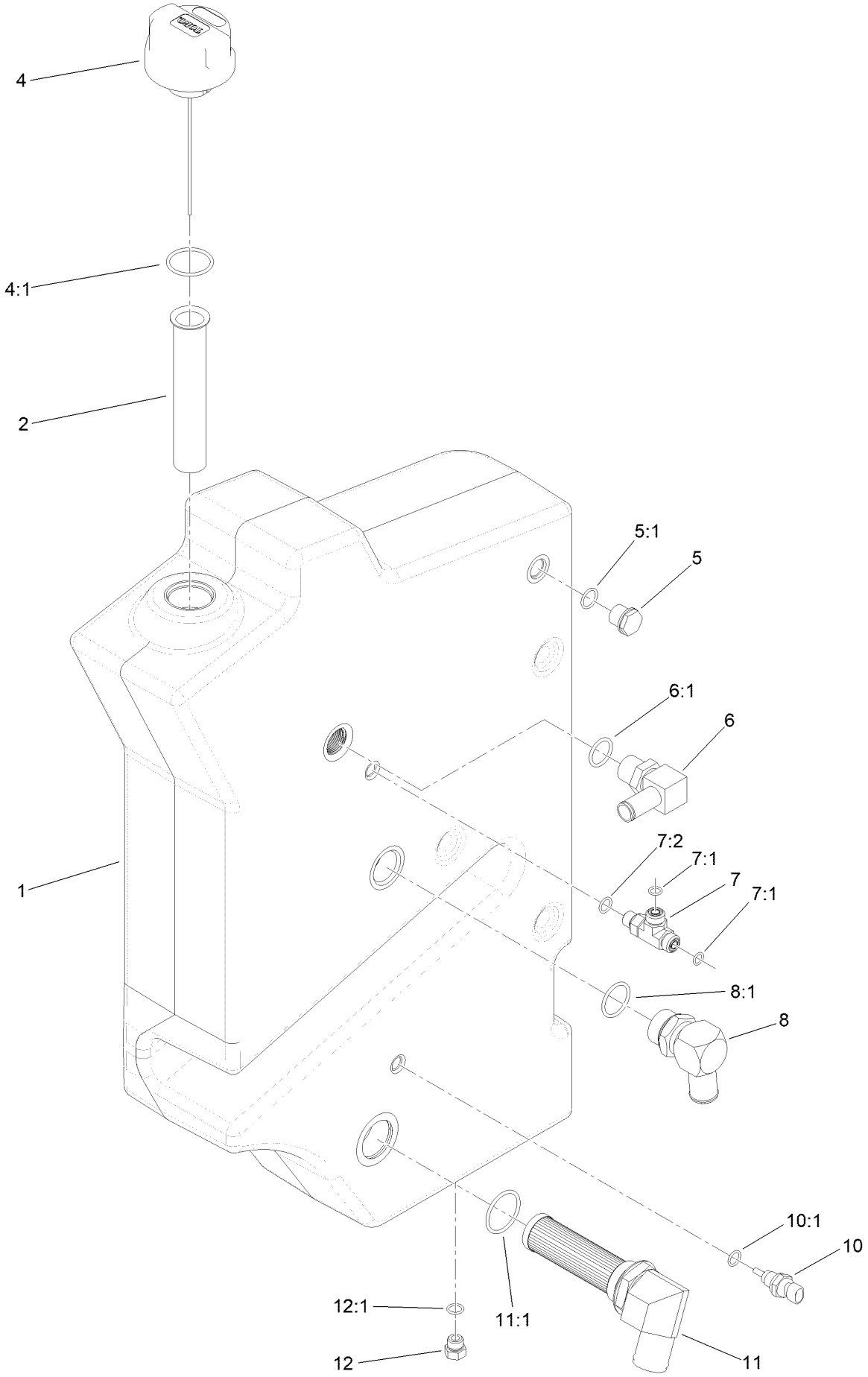

Hydraulic Tank Assembly No. 145-4467 (continued)

Ref.	Part Number	Qty.	Description
1	147-6712	1	Tank ASM-HYD
2	61-2790	1	Filter-Screen
4	117-0193	1	Cap-Hydraulic, Vented Breather
4:1	237-101	1	O-Ring
5	114-3075	1	Sight Glass ASM
5:1	237-79	1	O-Ring
6	353-987	1	Fitting-Elbow, 90
6:1	237-81	1	O-Ring
7	340-86	1	Fitting-Tee
7:1	237-22	2	O-Ring
7:2	237-42	1	O-Ring
8	23-8910	1	Stem-Barb-90
8:1	237-146	1	O-Ring
10	110-8829	1	Sender-Temperature
10:1	237-42	1	O-Ring
11	145-0622	1	Strainer Fitting ASM
11:1	237-101	1	O-Ring
12	353-508	1	Plug-HH
12:1	237-42	1	O-Ring

Parking Brake Assembly

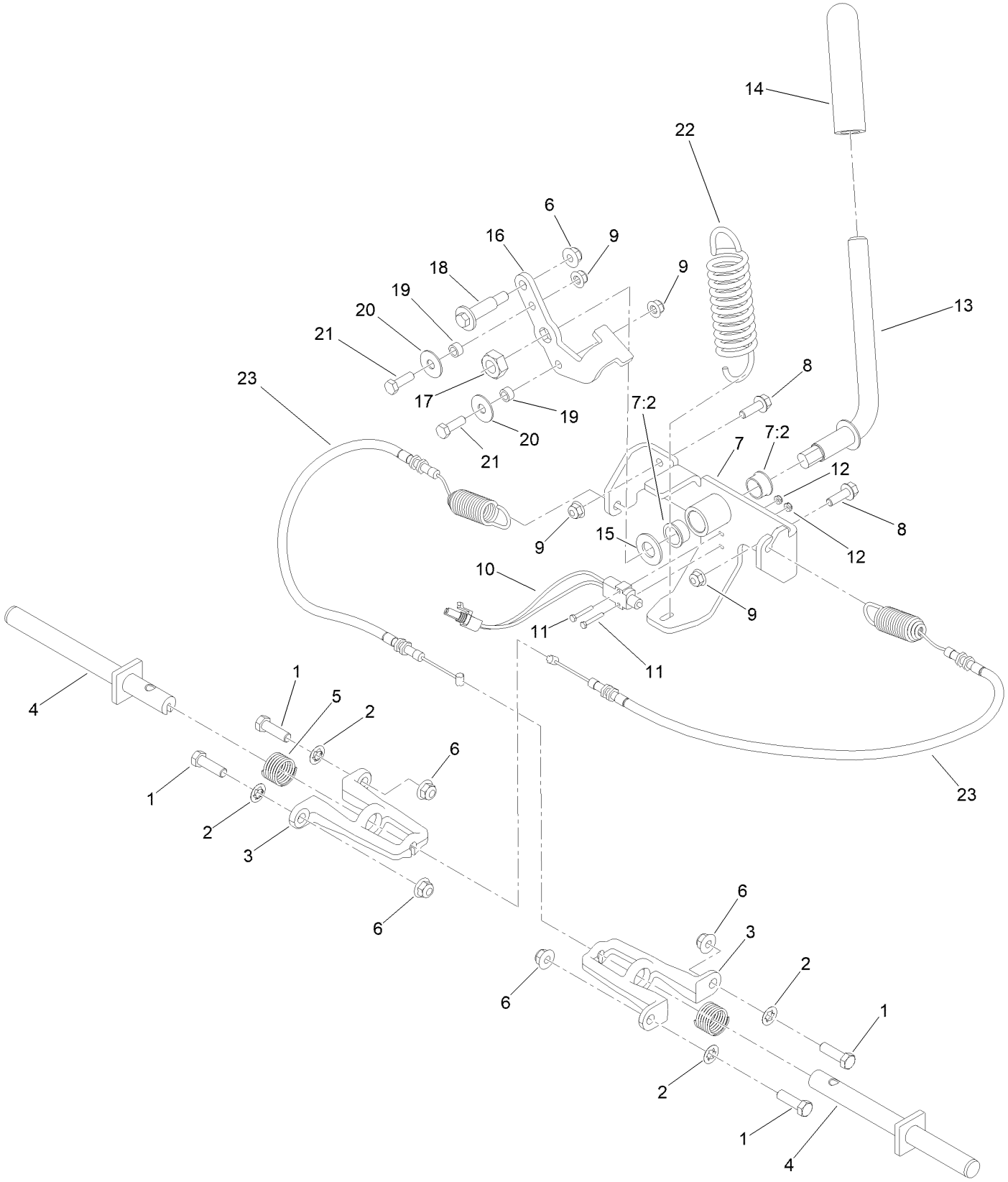

Parking Brake Assembly (continued)

Ref.	Part Number	Qty.	Description
1	323-7	4	Screw-HH
2	107-3154	4	Nut-Push
3	138-0207-03	2	Mount-Pin [black]
4	145-3170	2	Brake Rod ASM
5	125-0344	2	Spring-Compression
6	119-4042	5	Nut-HF, NI
7	136-4798	1	Bracket-Brake
7:2	256-252	2	Bearing-Flange
8	3234-29	2	Screw-HHF
9	119-4041	4	Nut-HF
10	95-8900	1	Switch
11	32105-9	2	Screw-HH
12	3296-9	2	Nut-Hex
13	133-0232	1	Lever-Brake
14	110-1037	1	Grip-Handle
15	3256-27	1	Washer-Flat
16	138-0205-0P	1	Plate-Brake Linkage
17	3296-33	1	Nut-Lock, NI
18	136-7198	1	Bolt-Shoulder
19	85-9120	2	Spacer-Pivot, Tilt
20	52-2860	2	Washer
21	322-5	2	Screw-HH
22	136-4787	1	Spring-EXT
23	136-4789	2	Cable-Brake

Cylinder Block Assembly

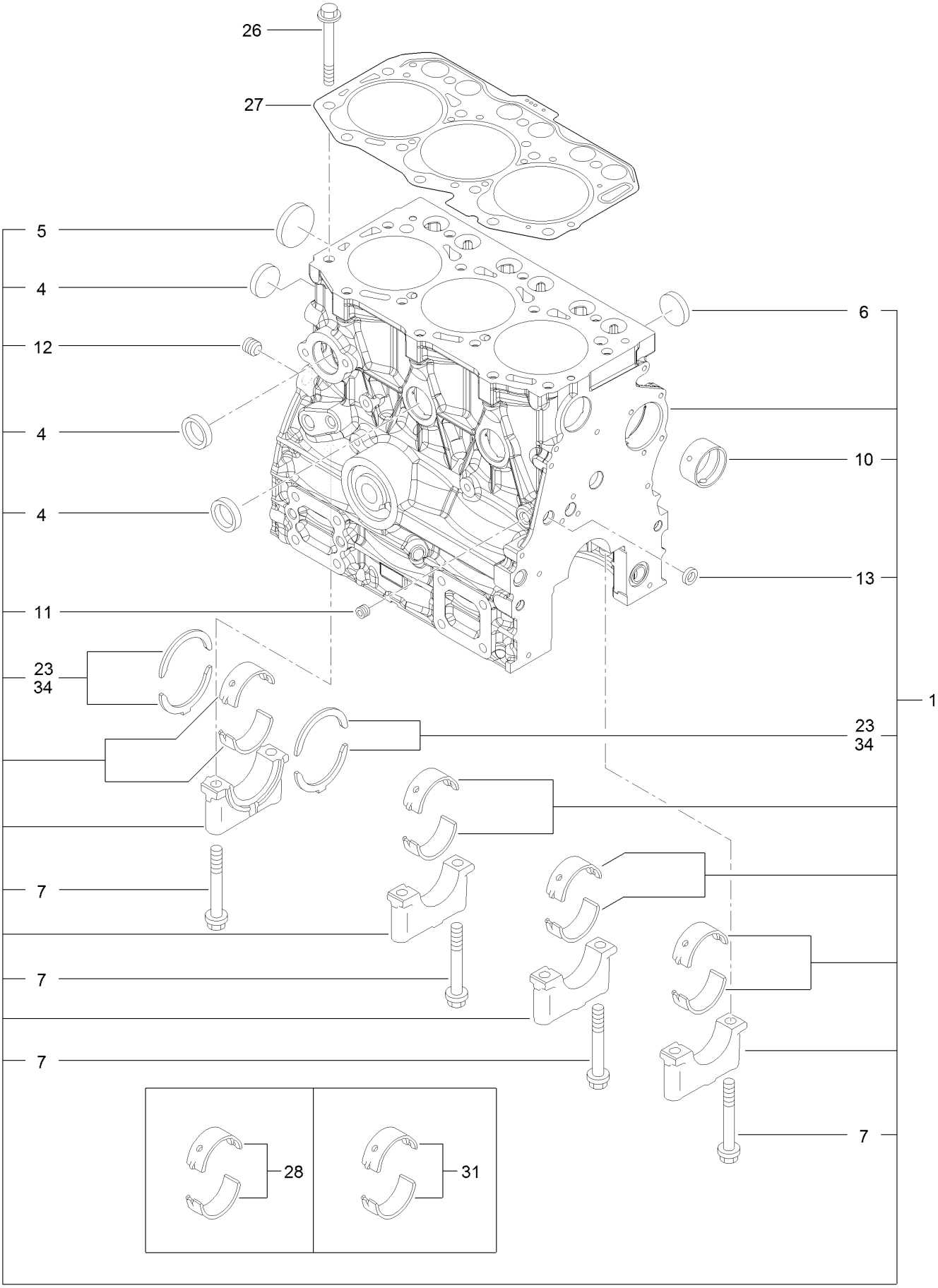

Cylinder Block Assembly (continued)

Ref.	Part Number	Qty.	Description
1	135-4030	1	Cylinder Block ASM
4	135-4031	4	Plug-Cup
5	135-4032	1	Plug-Dish
6	135-4033	3	Plug-Cup
7	135-4034	8	Bolt-Cap
10	135-4035	1	Bushing-Camshaft
11	125-6969	1	Plug
12	125-6973	1	Plug
13	125-7237	1	Plug
23	135-4036	2	Thrust Bearing ASM
26	135-4037	14	Bolt-Head, Cylinder
27	135-4038	1	Head Gasket Set
28	135-4039	4	Main Bearing ASM
31	135-4040	4	Main Bearing ASM
34	135-4041	2	Bearing-Thrust

Gear Housing Assembly

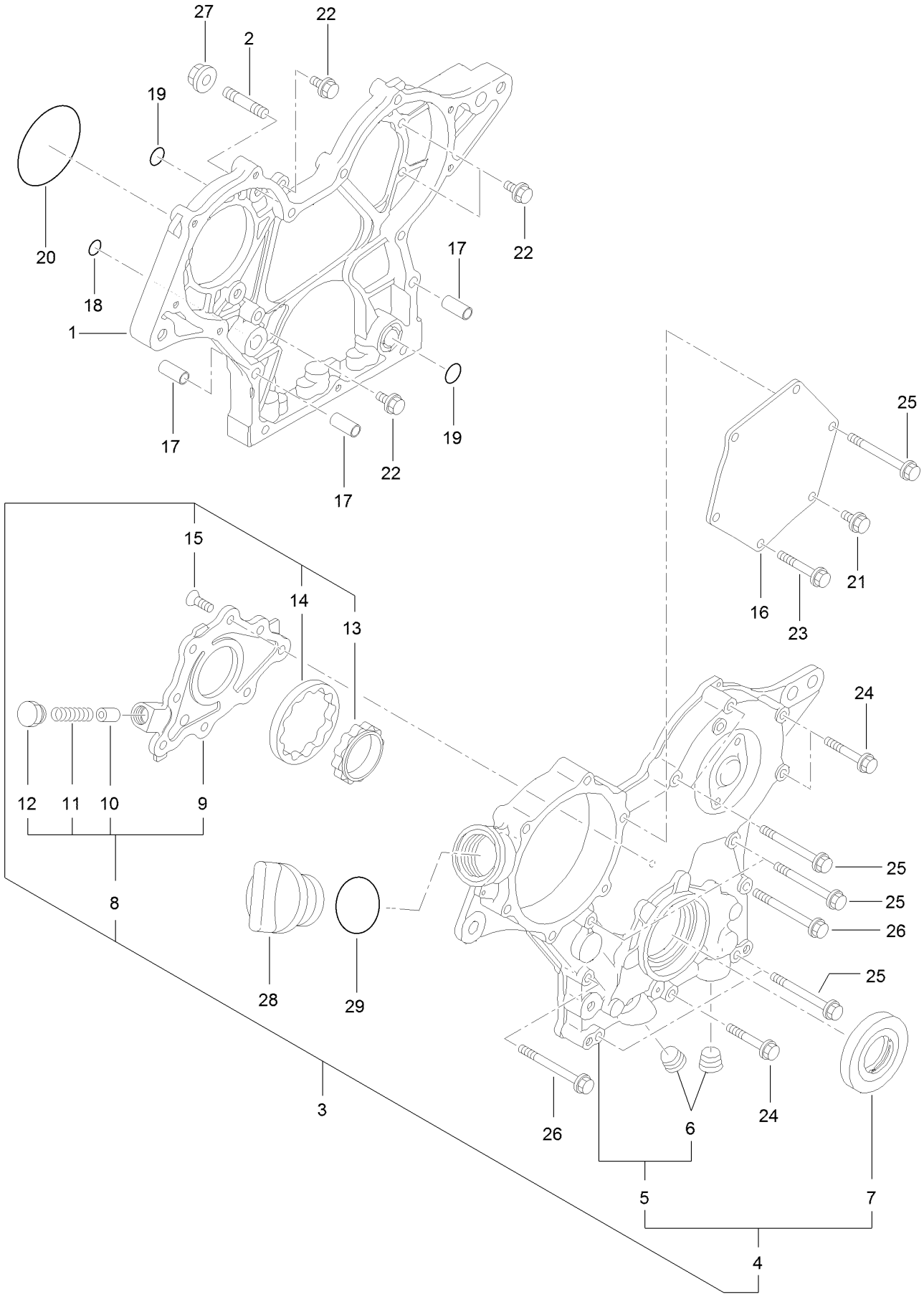

Gear Housing Assembly (continued)

Ref.	Part Number	Qty.	Description
1	135-4042	1	Case-Gear
2	135-4043	3	Bolt-Stud
3	135-4044	1	Gear Case Cover ASM
4	135-4045	1	Gear Case Cover ASM
5	135-4046	1	Cover-Case, Gear
6	133-6798	2	Plug
7	135-4047	1	Seal-Oil
8	135-4048	1	Cover ASM
9	135-4049	1	Cover-Pump
10	135-4050	1	Valve-Relief
11	135-4051	1	Spring
12	135-4052	1	Plug
13	135-4053	1	Rotor-Inner
14	135-4054	1	Rotor-Outer
15	135-4055	8	Screw
16	135-4056	1	Cover-Pump
17	135-4057	4	Dowel-Pipe
18	127-2973	1	O-Ring
19	135-4058	3	O-Ring
20	125-6957	1	O-Ring
21	125-7206	1	Bolt
22	125-7208	4	Bolt
23	125-7211	4	Bolt
24	125-7211	3	Bolt
25	135-4059	7	Bolt
26	136-8257	2	Bolt
27	125-7229	3	Nut
28	125-6972	1	Cover-Filler
29	125-7197	1	O-Ring

Fywheel Housing and Oil Sump Assembly

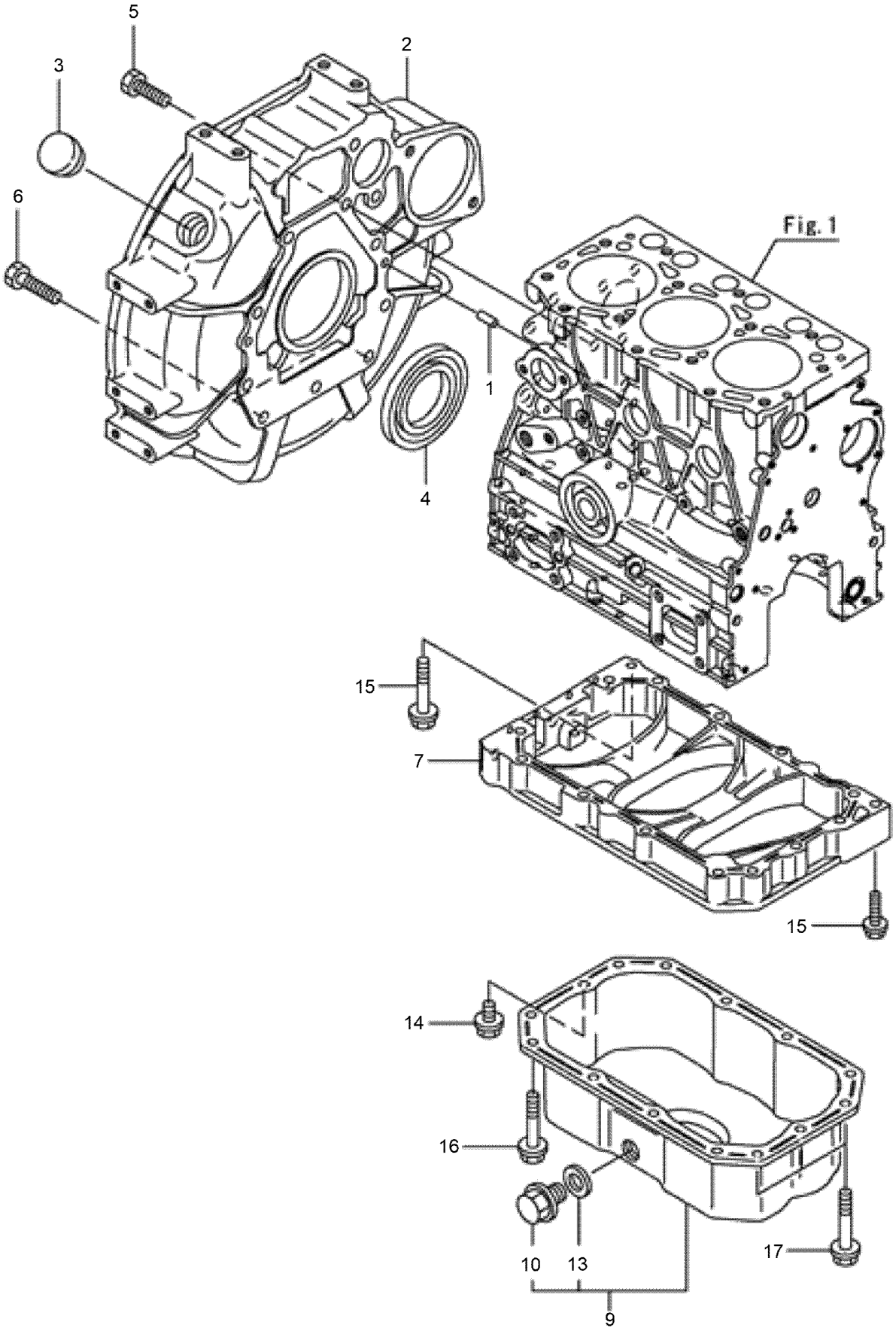

Fywheel Housing and Oil Sump Assembly (continued)

Ref.	Part Number	Qty.	Description
1	125-6995	2	Pin
2	134-1397	1	Housing-Flywheel
3	125-6910	1	Cap
4	135-4064	1	Seal-Oil
5	125-7226	8	Bolt
6	125-7227	3	Bolt
7	135-4066	1	Spacer-Pan, Oil

Ref.	Part Number	Qty.	Description
9	134-1398	1	Oil Pan ASM
10	135-4068	1	Plug
13	136-8236	1	Washer-Seal
14	125-7212	1	Bolt
15	125-7216	1	Bolt
16	125-7219	11	Bolt
17	125-7220	3	Bolt

Cylinder Head and Bonnet Assembly

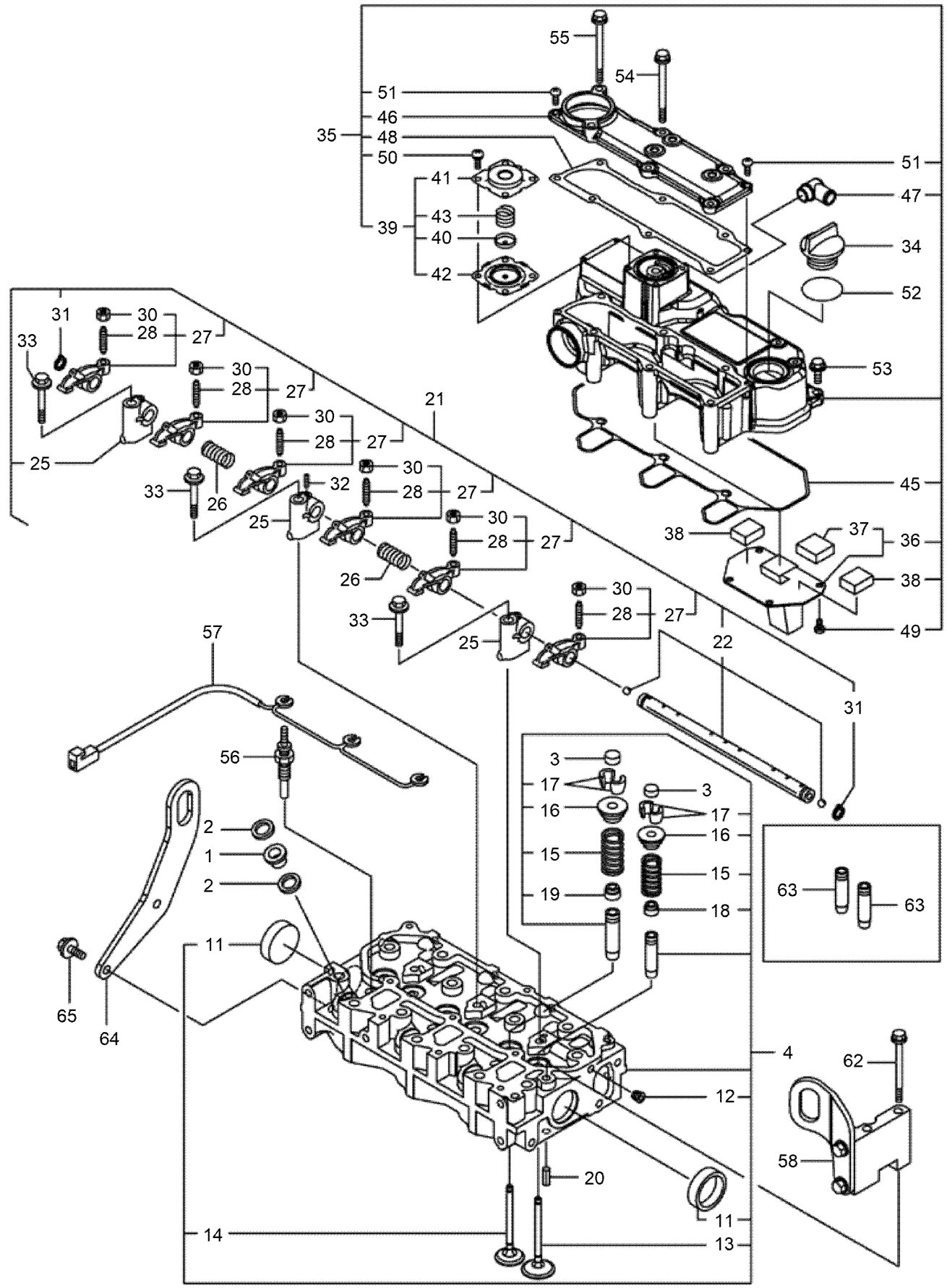

Cylinder Head and Bonnet Assembly (continued)

Ref.	Part Number	Qty.	Description
1	135-4069	3	Protector-Nozzle
2	135-4070	6	Gasket-Nozzle
3	135-4071	6	Cap-Valve
4	135-4072	1	Head ASM-Cylinder
11	135-4073	2	Plug-Cup
12	133-6797	1	Plug
13	135-4074	3	Valve-Suction
14	135-4075	3	Valve-Exhaust
15	135-4076	6	Spring-Valve
16	125-7054	6	Retainer
17	125-6914	12	Cotter
18	125-6915	3	Seal-Stem, Valve
19	125-6916	3	Seal-Stem, Valve
20	125-7184	2	Pin-Spring
21	135-4077	1	Rocker Support ASM
22	135-4078	1	Rocker Shaft ASM
25	135-4079	3	Support-Arm, Rocker
26	135-4080	2	Spring-Rocker
27	135-4081	6	Rocker Arm ASM
28	125-7013	6	Screw-Adjust, Valve
30	125-7014	6	Nut
31	135-7082	2	Ring
32	145-7836	1	Screw
33	125-7218	3	Bolt
34	125-6972	1	Cover-Filler
35	135-4084	1	Bonnet ASM
36	135-4085	1	Plate-Baffle
37	135-4086	1	Baffle-Breather
38	135-4086	2	Baffle-Breather
39	135-4088	1	Diaphragm ASM
40	135-4089	1	Plate-Diaphragm
41	135-4090	1	Cover-Diaphragm
42	135-4091	1	Diaphragm
43	135-4092	1	Spring-Diaphragm
45	135-4093	1	Gasket-Cover, Cylinder Head
46	135-4094	1	Cover ASM-Bonnet
47	133-6603	1	Elbow
48	135-4095	1	Gasket
49	125-7186	4	Screw
50	125-7186	4	Screw
51	127-3168	2	Screw
52	125-7197	1	O-Ring
53	125-7209	3	Bolt
54	135-4096	4	Bolt
55	163-1100	2	Bolt, M6X 85 Plated
56	163-1101	3	Plug, Glow 12V
57	134-1443	1	Connector-Plug, Glow
58	135-4292	1	Lifter ASM
62	127-3178	2	Bolt
63	125-6917	6	Guide
64	135-4097	1	Lifter-Engine
65	125-7214	2	Bolt

Suction Manifold Assembly

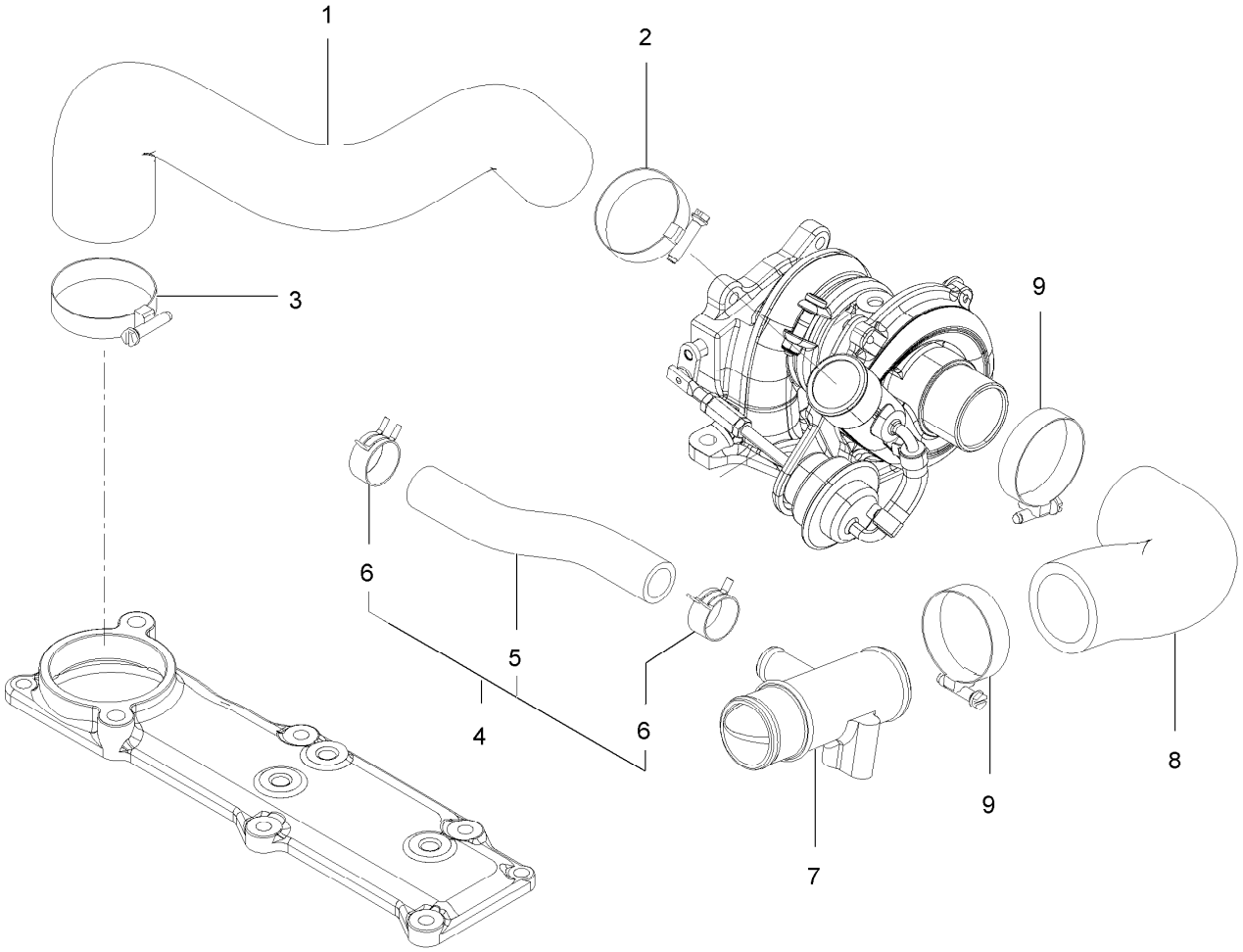

Suction Manifold Assembly (continued)

Ref.	Part Number	Qty.	Description
1	135-4101	1	Hose-Air Intake
2	125-7189	1	Clamp-Hose
3	127-3170	1	Clamp-Hose
4	135-4102	1	Hose ASM-Breather
5	135-4103	1	Hose-Breather
6	125-7040	2	Clip-Hose
7	135-4104	1	Joint-Breather
8	135-4105	1	Hose-Intake, Air
9	127-3170	2	Clamp-Hose

Exhaust Manifold Assembly

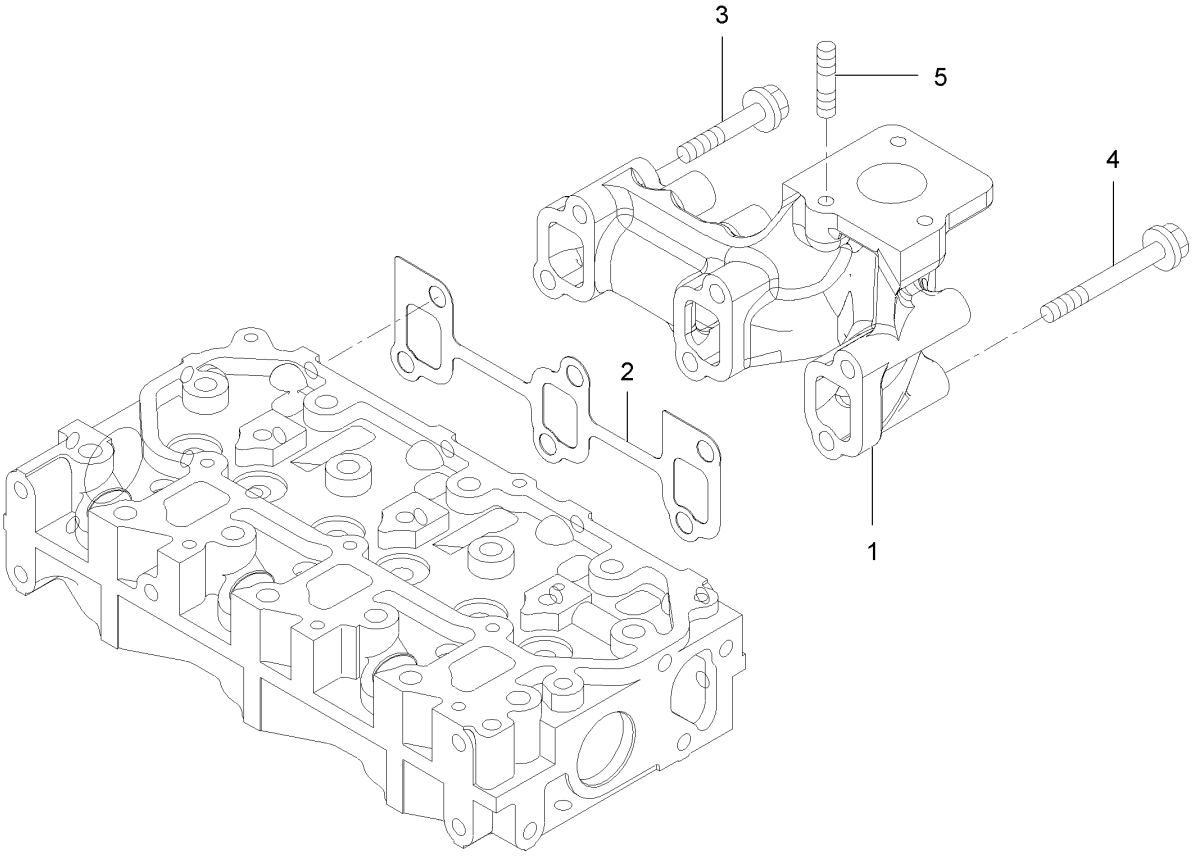

Exhaust Manifold Assembly (continued)

Ref.	Part Number	Qty.	Description
1	135-4106	1	Manifold-Exhaust
2	135-4107	1	Gasket-Manifold, Exhaust
3	133-6714	3	Bolt
4	133-6606	3	Bolt
5	125-7043	3	Stud

Camshaft and Driving Gear Assembly

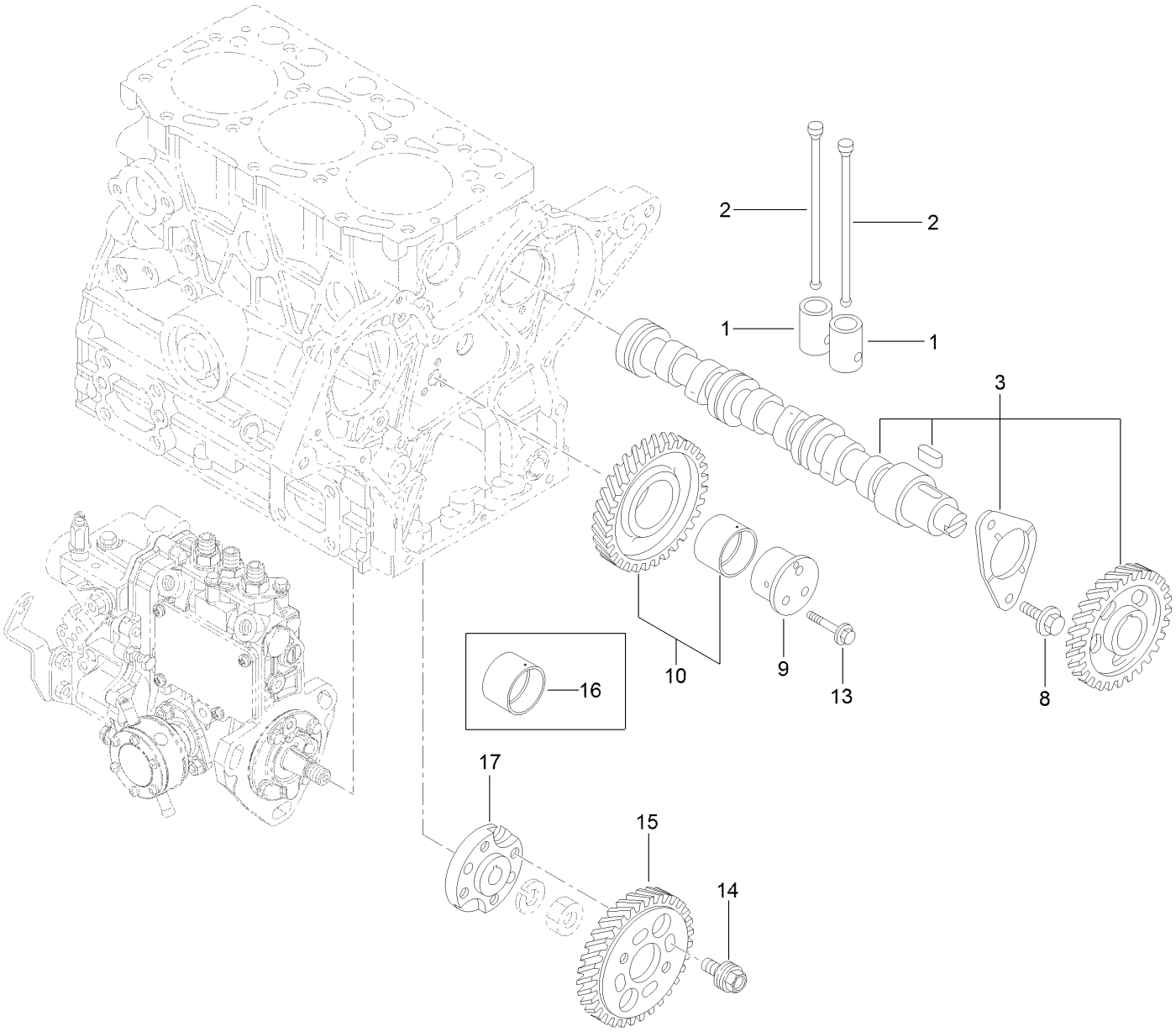

Camshaft and Driving Gear Assembly (continued)

Ref.	Part Number	Qty.	Description
1	135-4108	6	Tappet
2	135-4109	6	Push-Rod
3	135-4110	1	Camshaft ASM
8	125-7206	2	Bolt
9	135-4145	1	Shaft-Idle
10	135-4146	1	Idle Gear ASM
13	135-4147	3	Bolt
14	125-7020	4	Bolt
15	135-4148	1	Gear-Pump
16	135-4149	1	Bushing-Gear, Idle
17	135-4150	1	Flange

Turbine Assembly

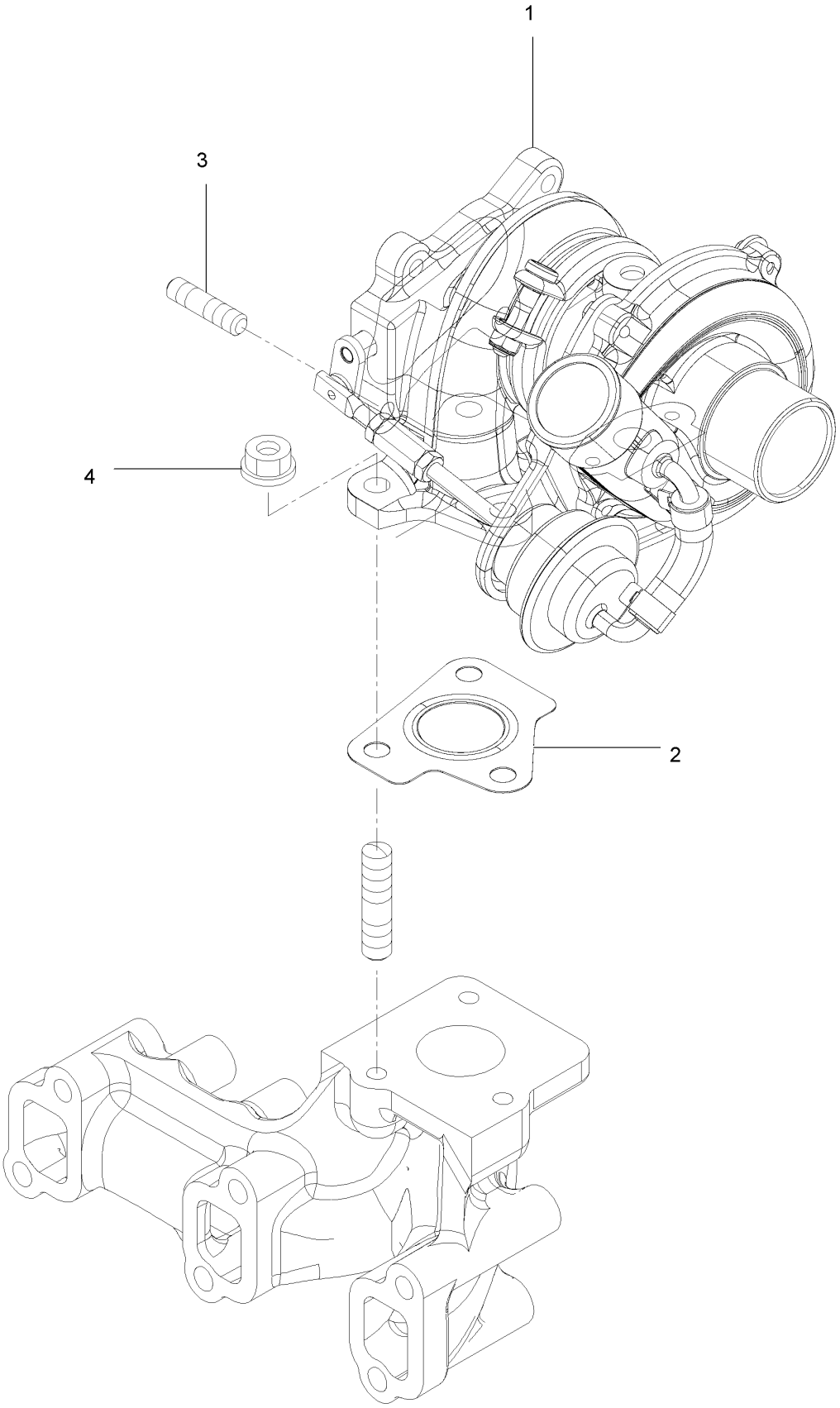

Turbine Assembly (continued)

Ref.	Part Number	Qty.	Description
1	135-4151	1	Turbocharger
2	127-3799	1	Gasket-In, T C
3	125-6906	4	Stud
4	125-7229	3	Nut

Crankshaft and Piston Assembly

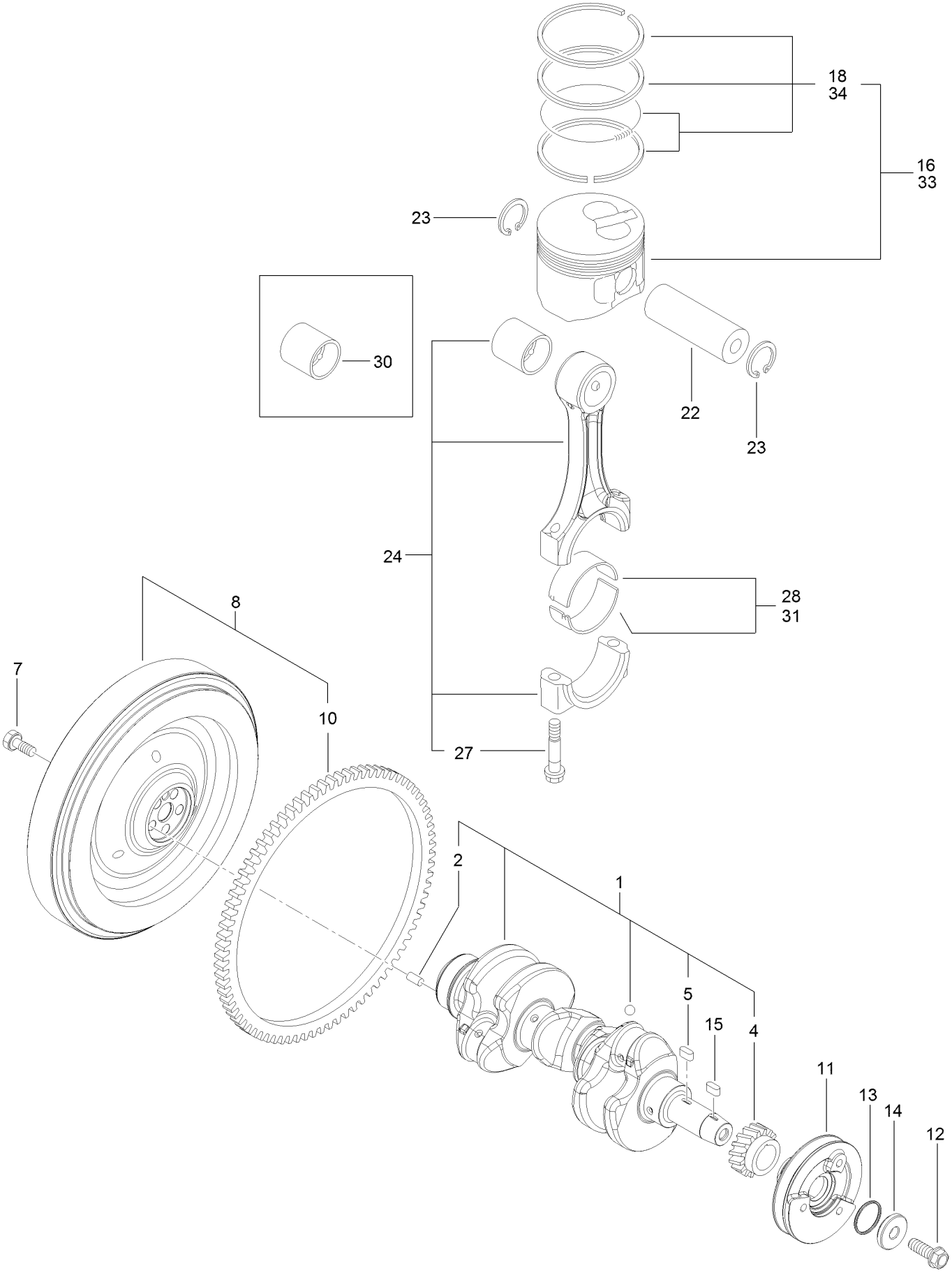

Crankshaft and Piston Assembly (continued)

Ref.	Part Number	Qty.	Description
1	135-4152	1	Crankshaft ASM
2	125-6995	1	Pin
4	135-4153	1	Gear-Crankshaft
5	135-4154	1	Key
7	125-6951	5	Bolt
8	140-7164	1	Flywheel ASM
10	125-6943	1	Gear
11	135-4158	1	V-Pulley, Crankshaft
12	135-4159	1	Bolt-Flange
13	134-4004	1	Packing-Washer
14	135-4161	1	Washer
15	135-4154	1	Key

Ref.	Part Number	Qty.	Description
16	135-4163	3	Piston ASM
18	135-4164	3	Ring ASM
22	135-4165	3	Pin-Piston
23	135-4166	6	Ring
24	134-4005	3	Connecting Rod ASM
27	135-4168	6	Bolt-Rod, Connecting
28	135-4169	3	Bearing-Pin, Crank
30	134-4006	3	Bushing-Pin, Piston
31	135-4171	3	Bearing-Pin (0.25)
33	134-4007	3	Piston ASM (0.25 Os)
34	135-4173	3	Ring ASM

Lube Oil System Assembly

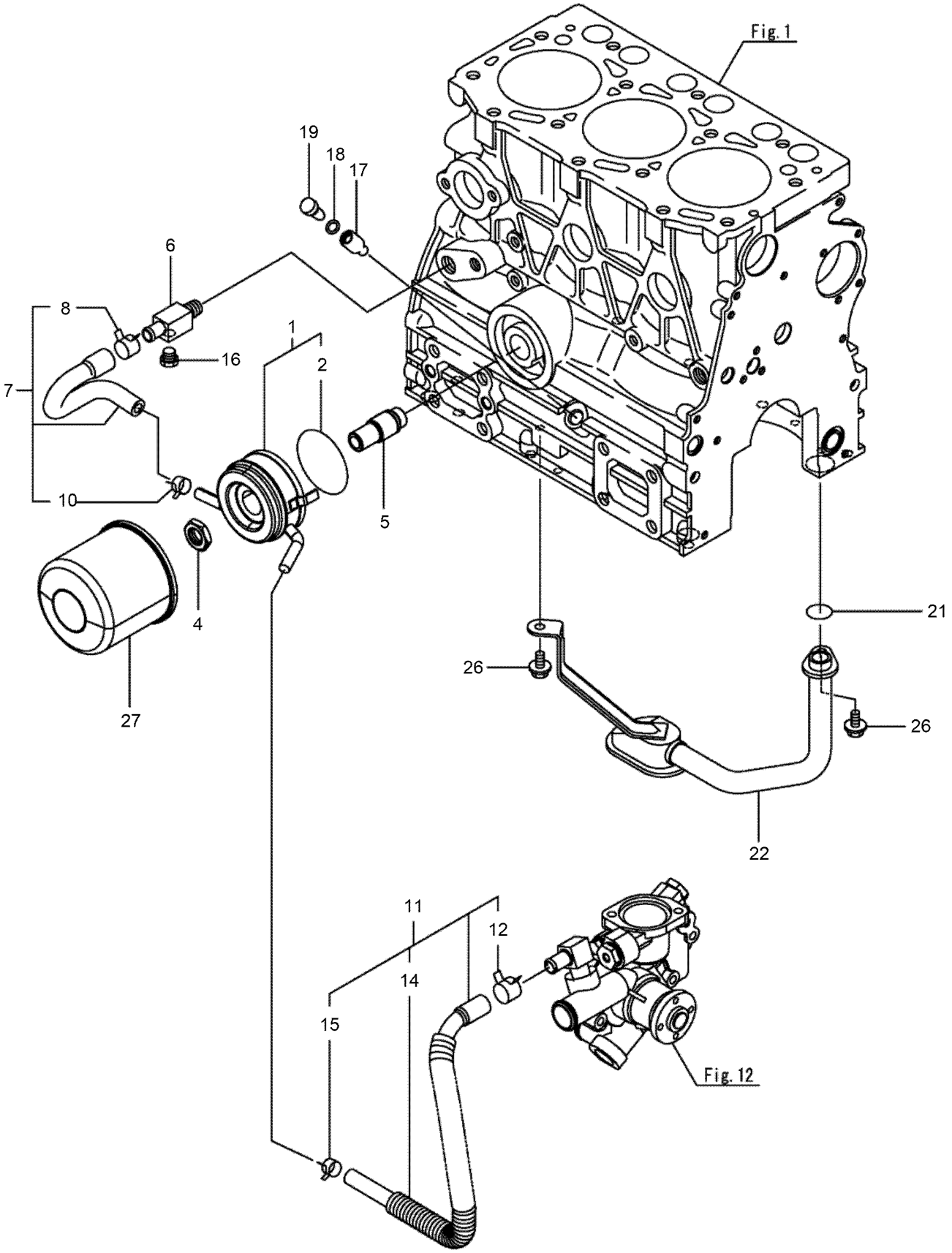

Lube Oil System Assembly (continued)

Ref.	Part Number	Qty.	Description
1	163-1102	1	Cooler Assy, Oil
2	135-4019	1	Packing-Oil Cooler
4	135-4020	1	Nut
5	163-1103	1	Stud, Lo Filter
6	125-6990	1	Joint
7	135-4176	1	Pipe ASM-Cooler In
8	125-7162	1	Clip
10	125-7191	1	Clamp-Hose
11	125-7079	1	Pipe ASM
12	125-7162	1	Clip
14	125-6946	1	Tube
15	125-7191	1	Clamp-Hose
16	125-7171	1	Plug-Drain
17	145-7837	1	Guide, Dipstick
18	145-7887	1	O-Ring, 4Dp10A
19	137-5132	1	Plug-Dipstick
21	135-4178	1	O-Ring
22	134-1414	1	Oil Inlet Pipe ASM
26	125-7205	2	Bolt
27	135-4181	1	Filter-Oil, Engine

Oil Pump Assembly

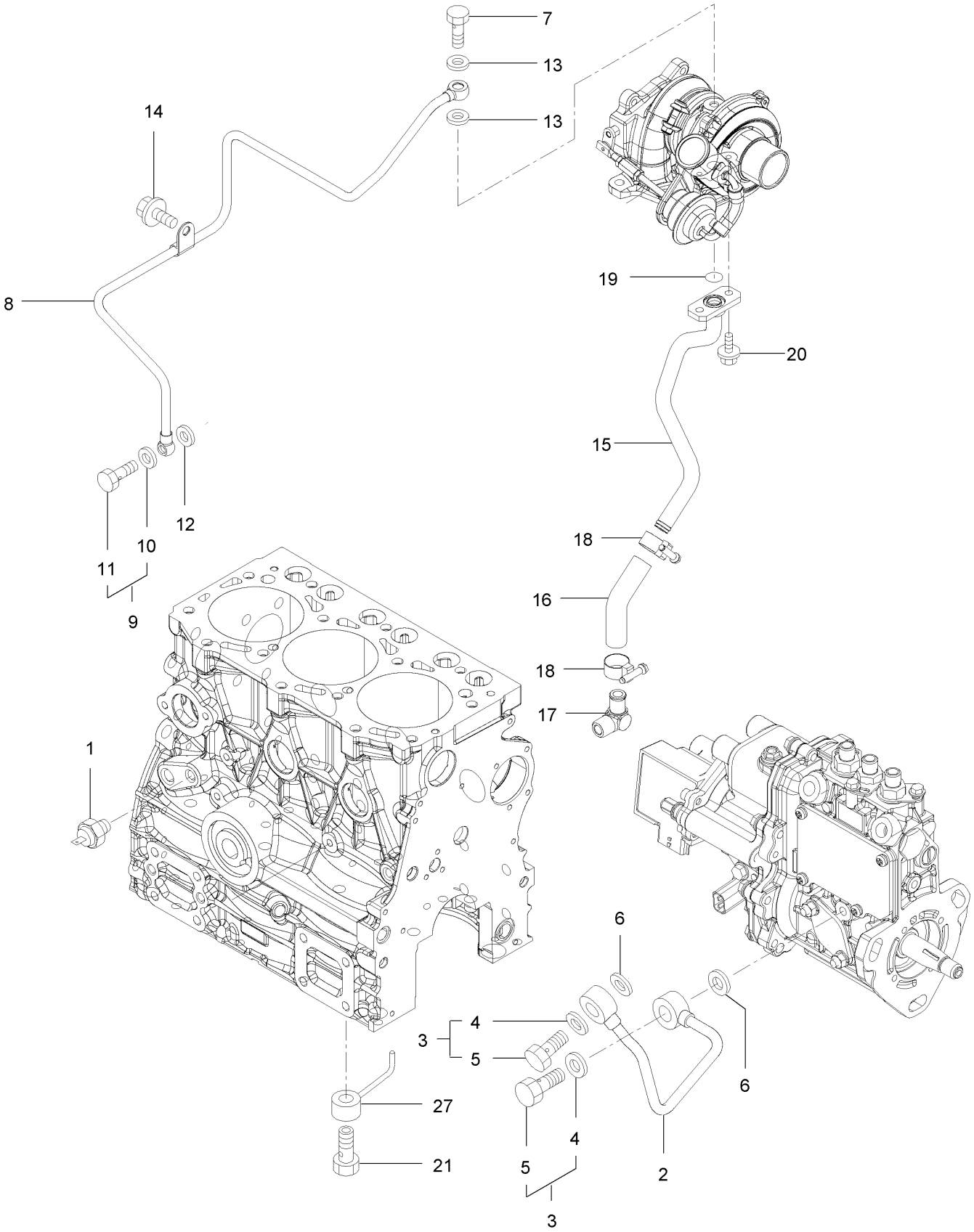

Oil Pump Assembly (continued)

Ref.	Part Number	Qty.	Description
1	125-6918	1	Switch-Oil
2	135-4182	1	Pipe-Oil
3	125-6988	2	Joint Bolt ASM
4	125-7174	2	Washer-Seal
5	125-7194	2	Bolt-Joint
6	125-7174	2	Washer-Seal
7	125-6952	1	Bolt-Joint, Pipe
8	135-4183	1	Pipe ASM-Lo
9	125-6988	1	Joint Bolt ASM
10	125-7174	1	Washer-Seal
11	125-7194	1	Bolt-Joint
12	125-7174	1	Washer-Seal
13	125-7193	2	Gasket
14	125-7212	1	Bolt
15	135-4184	1	Pipe-Lo Return
16	127-2992	1	Joint
17	127-3003	1	Elbow
18	127-3169	2	Clamp-Hose
19	125-7198	1	O-Ring
20	125-7208	2	Bolt
21	135-4185	3	Valve ASM-Check
27	135-4186	3	Nozzle ASM-Piston

Cooling Water System Assembly

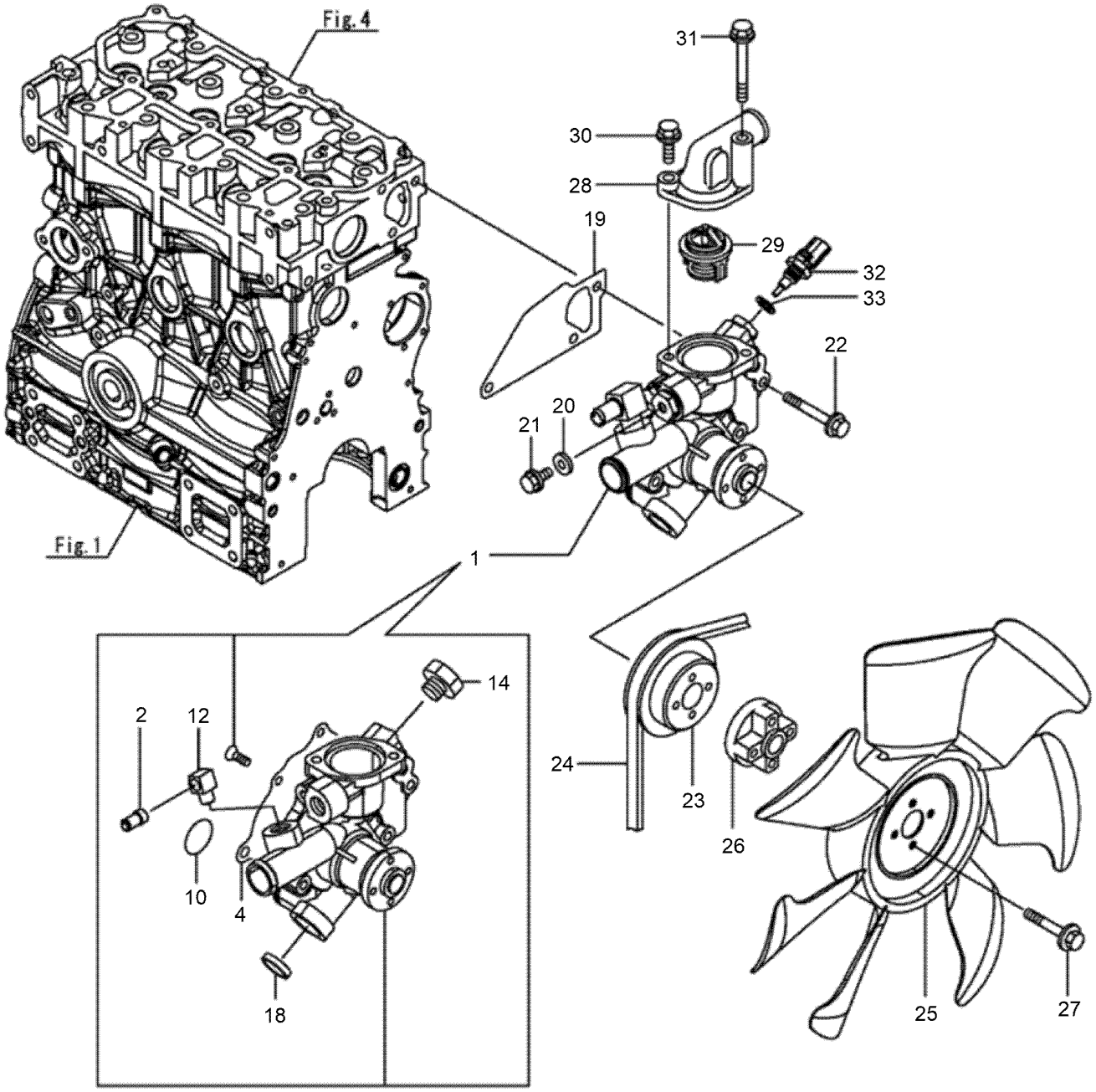

Cooling Water System Assembly (continued)

Ref.	Part Number	Qty.	Description
1	163-1104	1	Pump Assy, CW
2	135-4191	1	Joint-Pipe
4	135-4188	1	Gasket
10	135-4190	1	O-Ring
12	163-1105	1	Joint, Water Return
14	135-4203	1	Joint
18	163-1106	1	Plug, 25
19	135-4193	1	Gasket-Pump, Water
20	125-7192	1	Gasket
21	125-7212	1	Bolt
22	125-7220	3	Bolt

Ref.	Part Number	Qty.	Description
23	134-1417	1	V-Pulley
24	163-1107	1	V-Belt, A36
25	135-4196	1	Fan-Cooling 1
26	127-4768	1	Spacer
27	135-4147	4	Bolt
28	135-4199	1	Cover-Thermostat
29	135-4200	1	Thermostat
30	135-4201	1	Bolt
31	135-4202	1	Bolt
32	125-7124	1	Sensor-Thermostat, CW
33	125-7176	1	Washer-Seal

Fuel Injection Pump Assembly

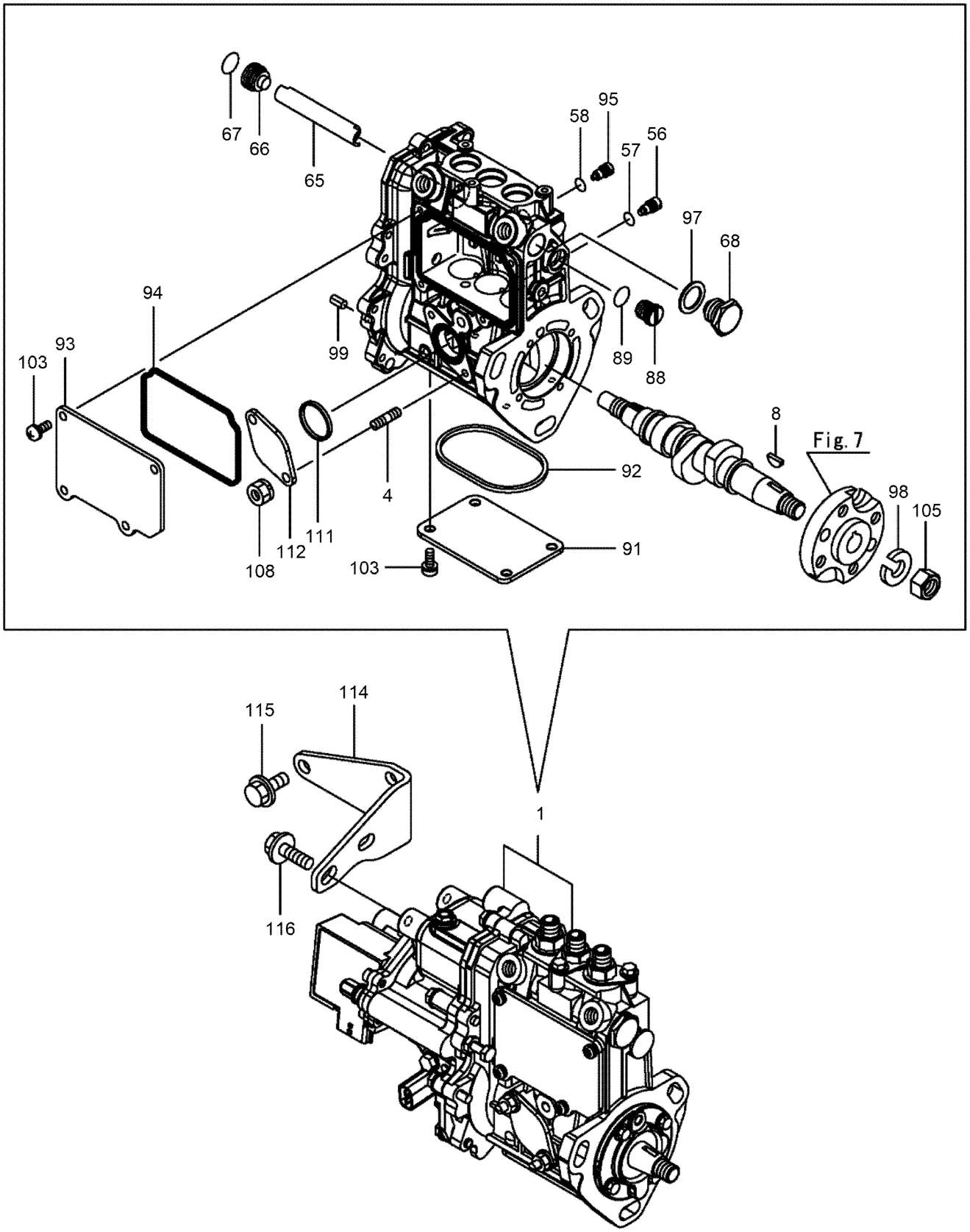

Fuel Injection Pump Assembly (continued)

Ref.	Part Number	Qty.	Description
1	163-1108	1	Fie Assy
4	135-4205	2	Bolt-Stud
8	135-4206	1	Key-Feather, Woodruff
56	125-7156	3	Stopper
57	135-4207	3	O-Ring
58	135-4207	1	O-Ring
65	135-4209	1	Deflector
66	135-4210	1	Plug-Deflector
67	135-4211	1	O-Ring
68	135-4212	1	Plug-Deflector
88	135-4213	1	Plug-Rack
89	135-4214	1	O-Ring
91	135-4215	1	Cover
92	135-4216	1	Gasket
93	135-4217	1	Cover
94	135-4218	1	Gasket
95	135-4219	1	Stopper-Rack
97	136-8236	1	Washer-Seal
98	135-4220	1	Washer-Spring
99	125-7183	2	Pin-Spring
103	135-4221	8	Screw
105	133-2506	1	Nut
108	135-4222	2	Nut
111	135-4223	1	Gasket
112	135-4224	1	Cover-Pump
114	135-4225	1	Support
115	125-7213	2	Bolt
116	125-7595	2	Bolt

Governor Assembly

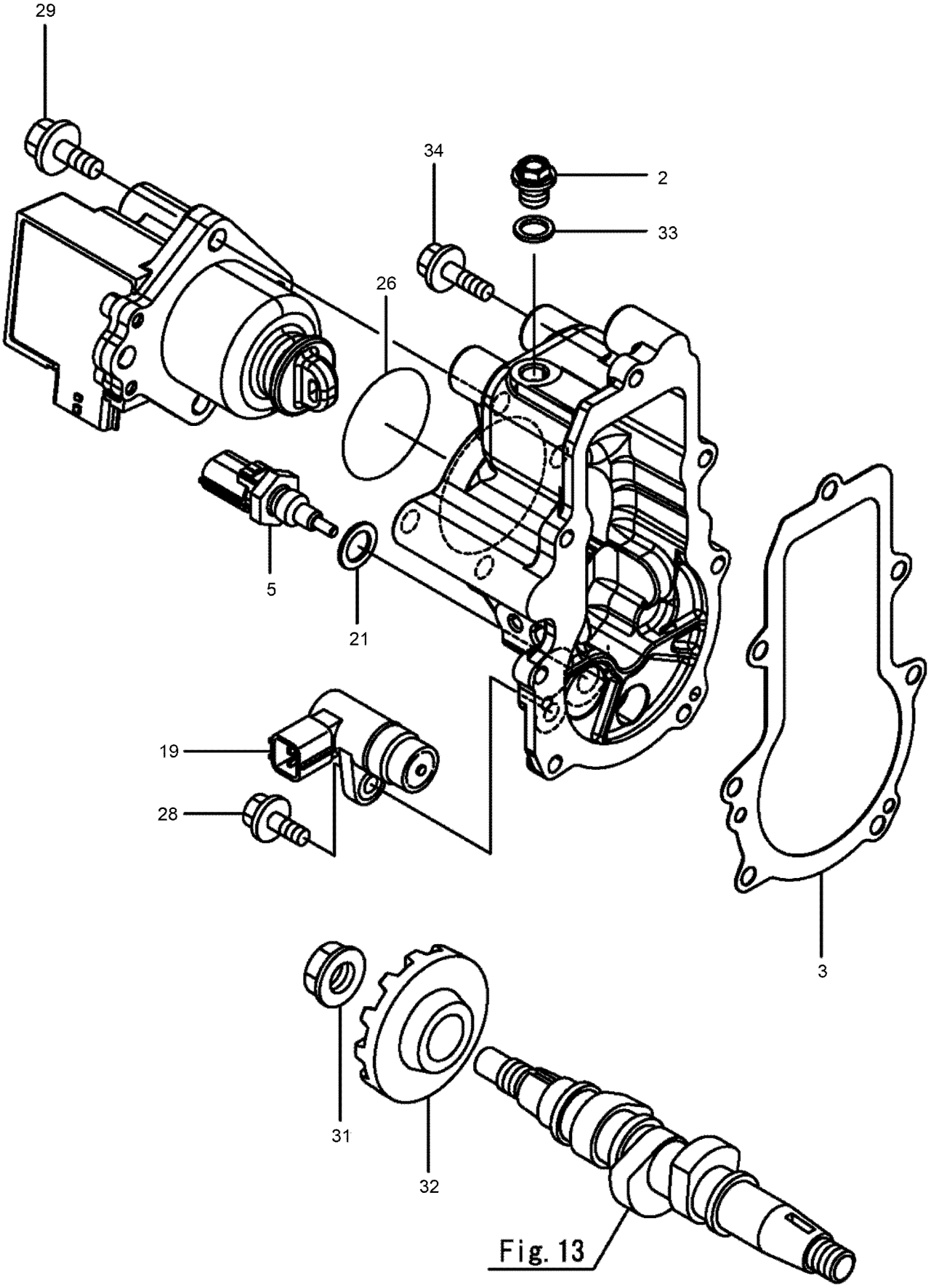

Fig. 13

Governor Assembly (continued)

Ref.	Part Number	Qty.	Description
2	135-4226	1	Plug
3	135-4227	1	Gasket
5	135-4228	1	Sensor-Oil Temp
19	125-7152	1	Sensor
21	125-7176	1	Washer-Seal
26	125-7200	1	O-Ring

Ref.	Part Number	Qty.	Description
28	125-7208	1	Bolt
29	125-7594	4	Bolt
31	125-6993	1	Nut
32	163-1109	1	Gear
33	125-7175	1	Washer-Seal
34	125-7209	7	Bolt

Fuel Injection Valve Assembly

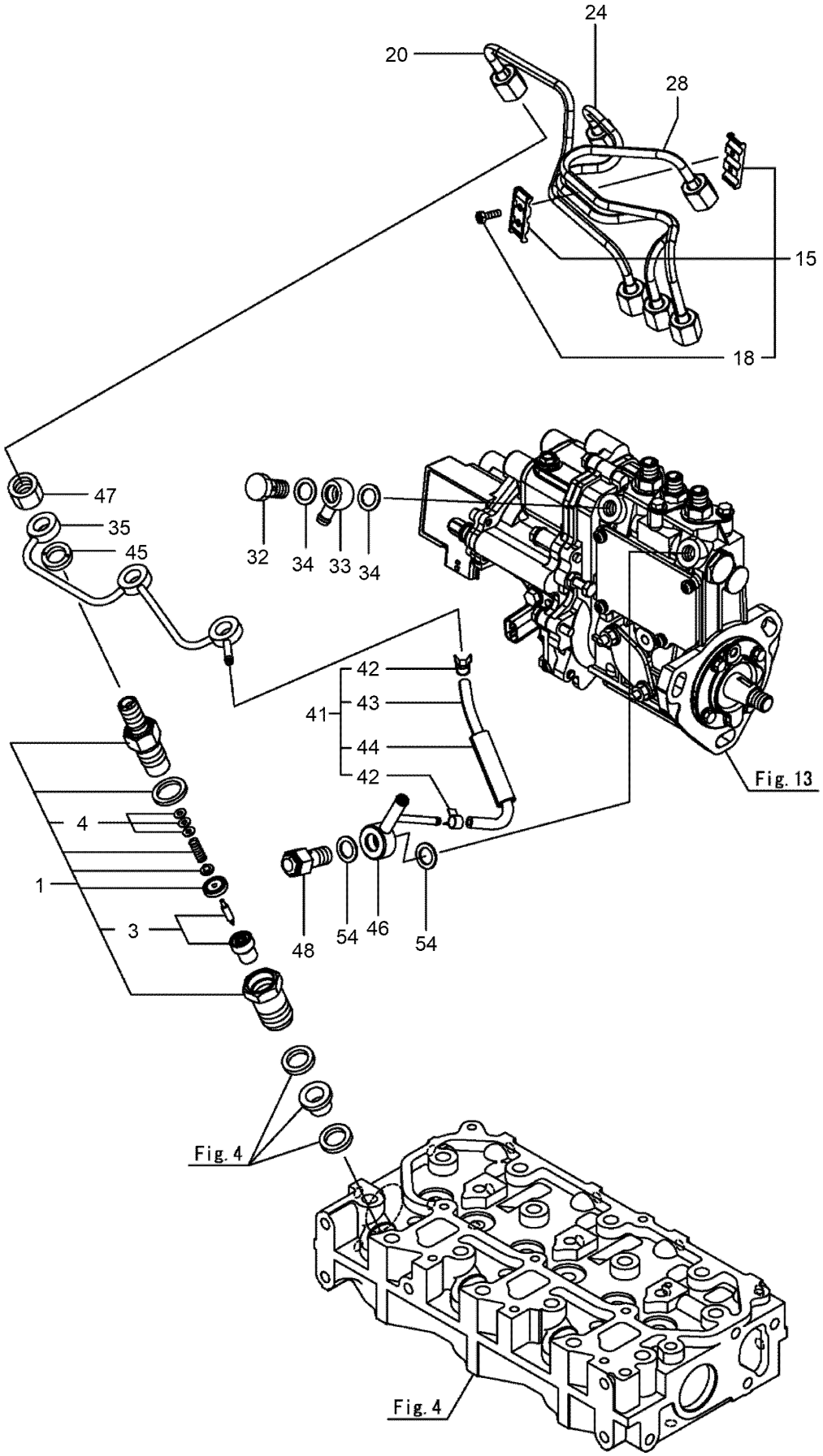

Fuel Injection Valve Assembly (continued)

Ref.	Part Number	Qty.	Description
1	135-4229	3	Nozzle ASM
3	135-4230	3	Nozzle ASM
4	135-4231	3	Adjusting Shim Set
15	134-1488	1	Retainer-Pipe
18	125-7027	2	Bolt
20	135-4233	1	Pipe ASM (Inj No1)
24	135-4234	1	Pipe ASM (Inj No2)
28	135-4235	1	Pipe ASM (Inj No3)
32	135-4242	1	Bolt-Joint, Pipe
33	135-4243	1	Joint-Pipe
34	125-7176	2	Washer-Seal

Ref.	Part Number	Qty.	Description
35	135-4236	1	Pipe ASM
41	145-3245	1	Pipe Assy, Fo Return
42	136-8225	2	Clamp-Hose
43	145-3246	1	Pipe, Fo Return
44	145-3247	1	Tube, Corrugated
45	135-4237	3	Gasket
46	135-4239	1	Joint-Over Flow
47	135-4240	3	Nut-Nozzle
48	135-4241	1	Check Valve ASM
54	125-7176	2	Washer-Seal

Starter Motor Assembly

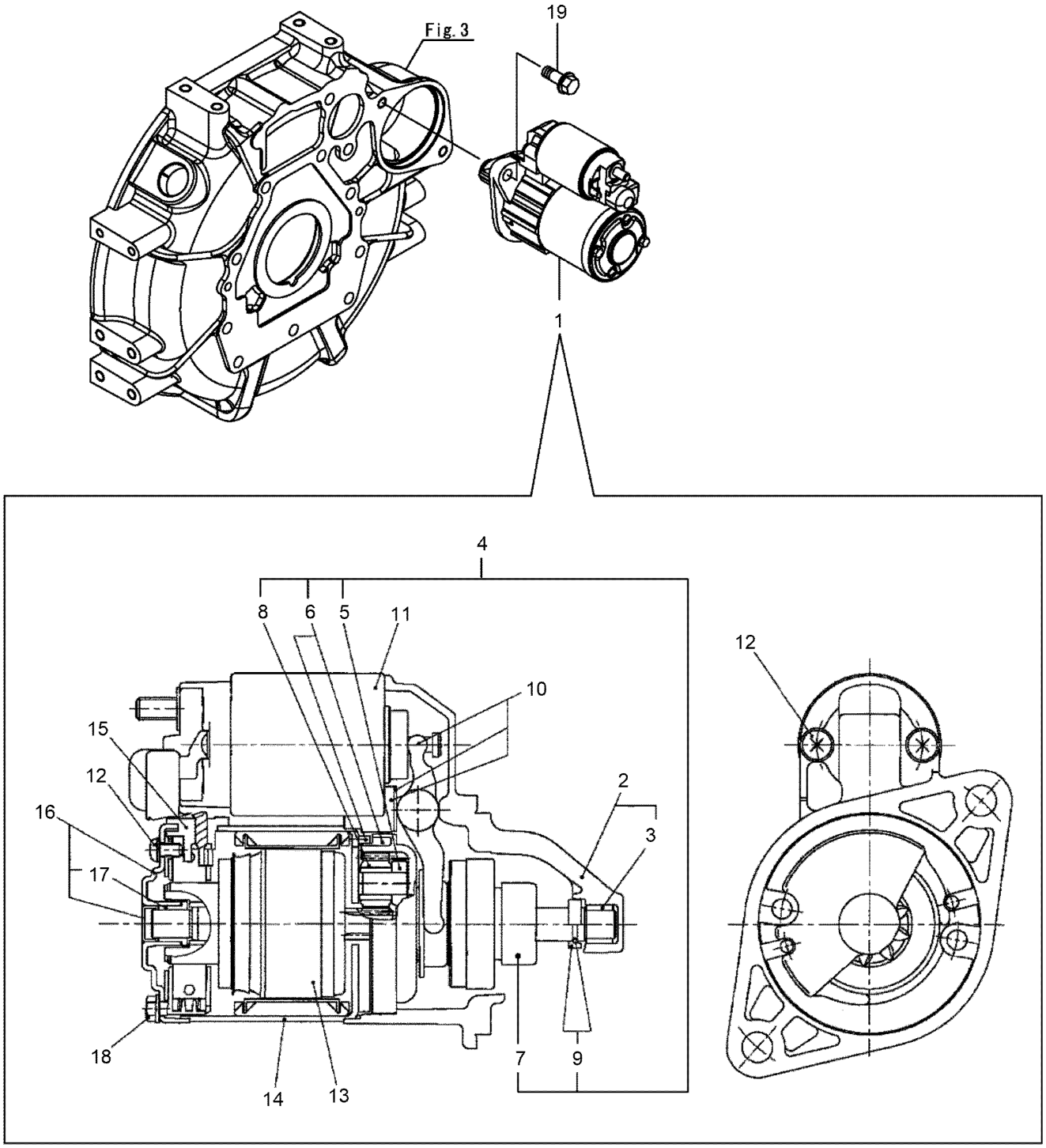

Starter Motor Assembly (continued)

Ref.	Part Number	Qty.	Description
1	163-1110	1	Starter, 12V-1.1Kw
2	163-1111	1	Bracket Assy, Front
3	163-1112	1	Metal, Fr
4	163-1113	1	Shaft Assy, Clutch
5	163-1114	1	Shaft Assy, Gear
6	163-1115	1	Gear Assy, Internal
7	163-1116	1	Clutch, Over Running
8	163-1117	3	Gear Assy
9	163-1118	1	Stopper Set
10	163-1119	1	Lever
11	163-1120	1	Switch Assy
12	163-1121	1	Screw Set
13	163-1122	1	Armature
14	163-1123	1	Yoke Assy
15	163-1124	1	Brush Assy
16	163-1125	1	Cover Assy
17	163-1126	1	Metal, Rr
18	163-1127	1	Bolt Set
19	133-2496	2	Bolt

Generator Assembly

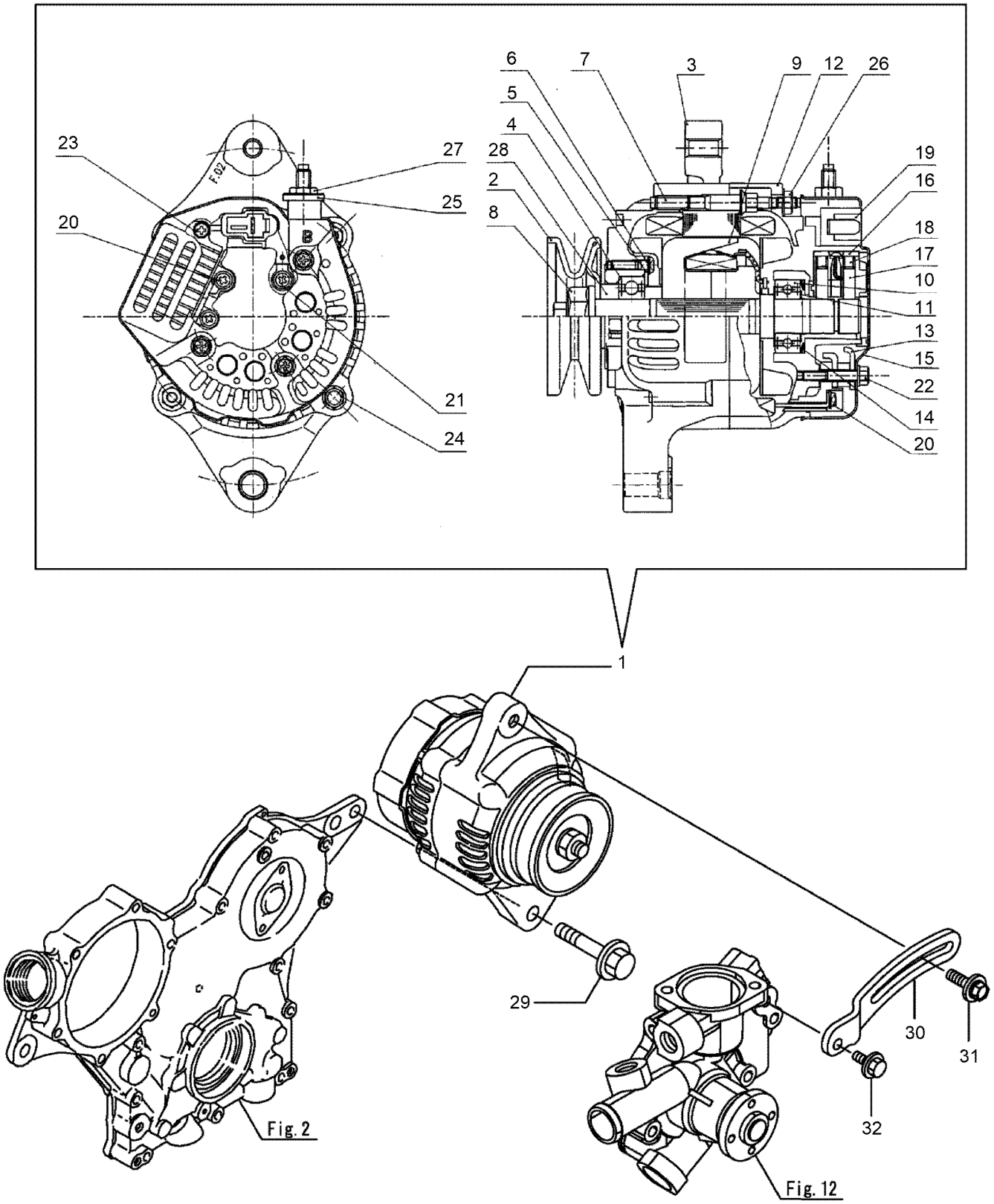

Generator Assembly (continued)

Ref.	Part Number	Qty.	Description
1	163-1128	1	Alternator, 12V-40A
2	163-1129	1	Pulley, Generator
3	163-1130	1	Frame Assy, Drive
4	163-1131	1	Bearing, Ball
5	163-1132	1	Plate, Retainer
6	163-1133	4	Screw
7	163-1134	2	Stud
8	163-1135	1	Nut
9	163-1136	1	Rotor Assy
10	163-1137	1	Bearing, Ball
11	163-1138	1	Cover, Bearing
12	163-1139	1	Frame, End Rr
13	163-1140	1	Holder Assy, Rectifi
14	163-1141	1	Washer
15	163-1142	1	Cover, End Rr
16	163-1143	1	Holder Assy, Brush
17	163-1144	2	Brush Assy, Sub
18	163-1145	2	Spring, Coil
19	163-1146	1	Regulator Assy
20	163-1147	6	Screw
21	163-1148	1	Screw
22	163-1149	3	Bolt
23	163-1150	2	Screw, W/Washer
24	163-1151	2	Bolt
25	163-1152	1	Bush, Insulation
26	163-1153	2	Nut
27	163-1154	1	Nut
28	163-1155	1	Collar
29	135-4277	1	Bolt
30	163-1156	1	Adjuster, Belt
31	137-5131	1	Bolt-Adjusting
32	125-7595	1	Bolt

Electronic Control Unit Assembly

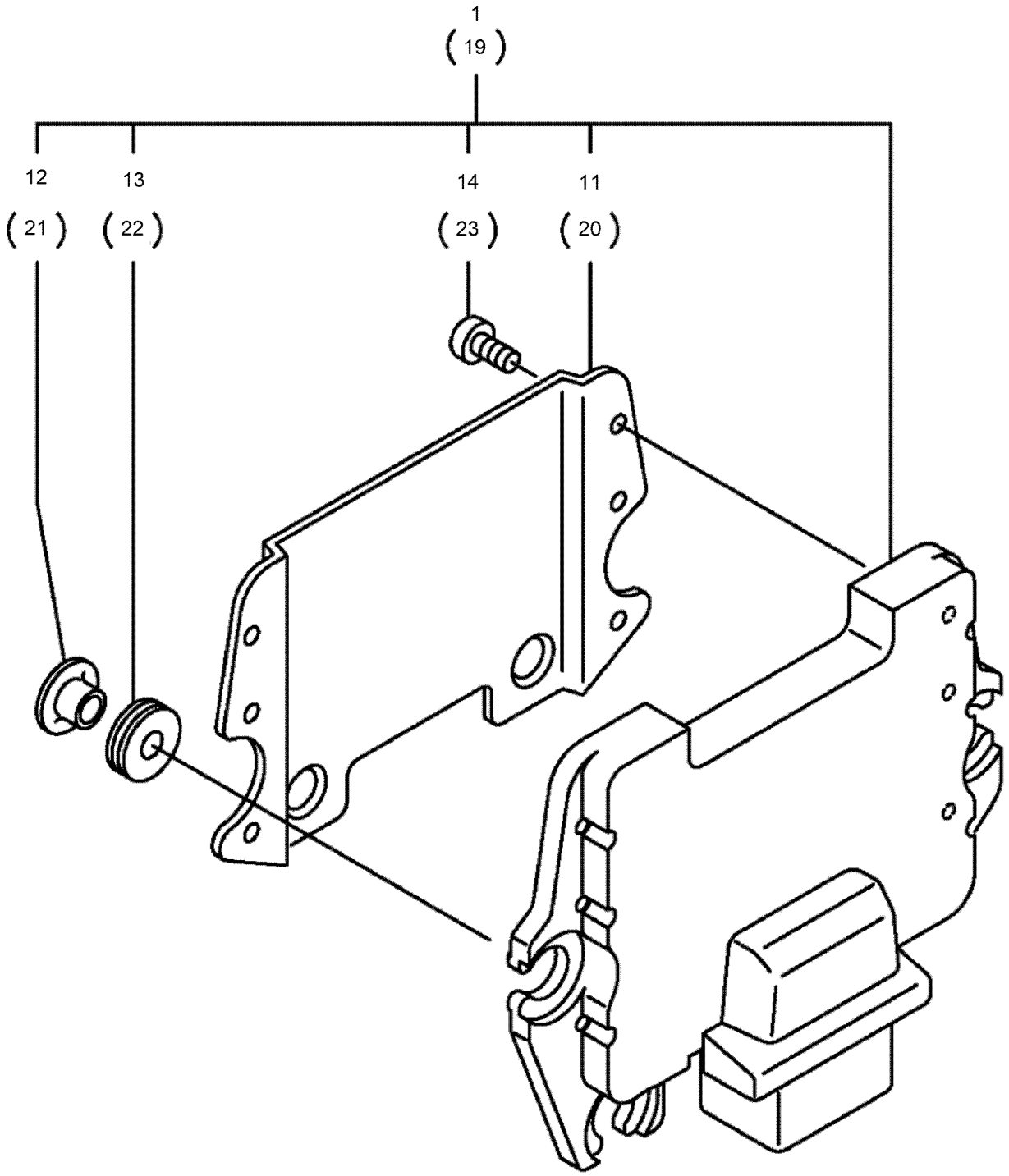

Electronic Control Unit Assembly (continued)

Ref.	Part Number	Qty.	Description
1	163-1157	1	Ecu Assy,380Ft-Zmtr2
11	125-7129	1	Shield
12	125-7130	3	Collar
13	125-6908	3	Absorber
14	125-7187	6	Screw

Ref.	Part Number	Qty.	Description
19	121-1591	1	Controller-Engine
20	125-7129	1	Shield
21	125-7130	3	Collar
22	125-6908	3	Absorber
23	125-7187	6	Screw

Accessories

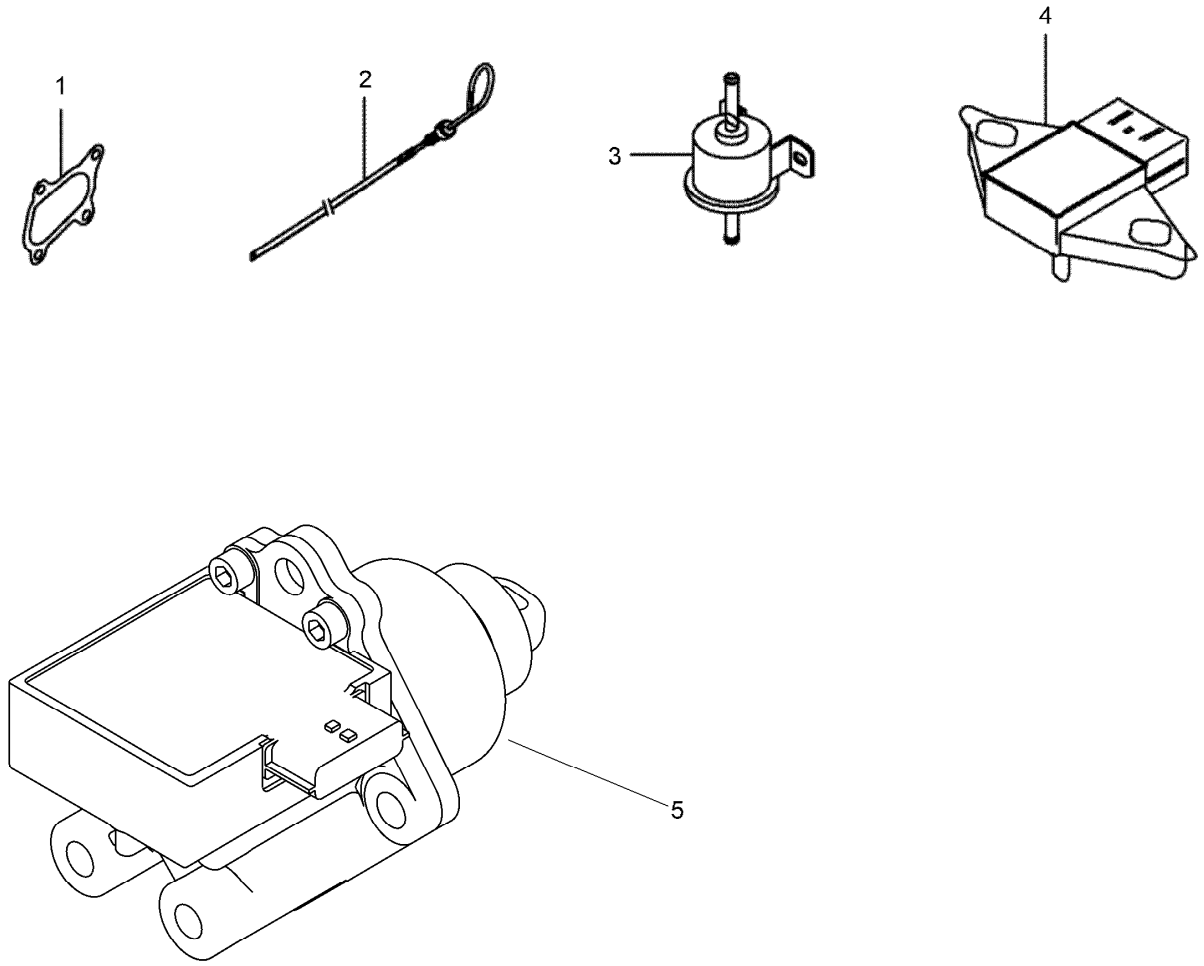

Accessories (continued)

Ref.	Part Number	Qty.	Description
1	127-3779	1	Gasket-Out, T C
2	163-1158	1	Dipstick, Lub.Oil
3	121-5613	1	Pump-Fuel, Electric
4	126-9261	1	Sensor-Atm
5	163-4282	1	3Tnv80Ft-Zmtr2 - Rack Actuator

Attachments and Accessories

For 22588 — TX 1000 Turbo Wide Track Compact Tool Carrier

Product Name	Model/Part
Premium Engine Oil 10w30 (55 Gallon Drum)	121-6392
Premium Engine Oil 10w30 (5 Gallon Pail)	121-6393
Premium Engine Oil 15w40 (55 Gallon Drum)	121-6394
Premium Engine Oil 15w40 (5 Gallon Pail)	121-6395
PX Hydraulic Fluid (5 Gal)	133-8086
PX Hydraulic Fluid (55 Gal)	133-8087
PX Hydraulic Fluid-4 Pack (Gallon)	138-9460
TX1000 Turbo Light Kit	145-4544
Kit-Filter, 250 Hour	147-6854
Kit-Filter, 1000 Hour	147-6855
Standard Bucket	22340
High Volume Bucket	22342
Standard Bucket, Dingo TX 1300	22345
Low Profile Bucket, Dingo TX 1300	22346
Loose Materials Bucket	22410
48in Hydraulic Blade	22414
Bore Drive Head	22420
Rod and Reamer	22421
Stump Grinder	22429
Tree Forks	22438
Cement Bowl	22442
40in Tiller	22445
Crumber Kit	22464
Trench Filler	22472
High-Torque Trencher Head	22473
High-Speed Trencher Head	22474
Crumber Kit	22477
4-in-1 Bucket	22478
24in X 4in Soil Chain	22480
24in X 4in Combination Chain	22481
24in X 4in Rock Tooth Chain	22482
24in X 6in Soil Chain	22483
24in X 6in Combination Chain	22484
24in X 6in Rock Tooth Chain	22485
36in X 4in Soil Chain	22486
36in X 4in Combination Chain	22487
36in X 4in Rock Tooth Chain	22488
36in X 6in Rock Tooth Chain	22489
36in X 6in Soil Chain	22490
36in X 6in Combination Chain	22491
48in x 4in Soil Chain	22492
48in x 4in Combination Chain	22493
48in x 6in Soil Chain	22494
48in x 6in Combination Chain	22495
Narrow Bucket	22520
Grapple Rake	22577

Attachments and Accessories (continued)

Snow Thrower 22585
Adjustable Forks 22586
Grapple Bucket 22590
Multi-Purpose Tool 22672
Floor Scraper 22674
Auger Head 22805
Universal Swivel Auger Head 22806
18in Auger Bit 22814
24in Auger Bit 22815
30in Auger Bit 22816
12in Auger Bit Extension 22818
24in Auger Bit Extension 22819
6in Full-Flight Auger Bit 22820
9in Full-Flight Auger Bit 22821
12in Full-Flight Auger Bit 22822
15in Full-Flight Auger Bit 22823
Vibratory Plow 22911
Soil Cultivator 23102
Hydraulic Breaker 23136
Log Grapple 23137
Rake - Log Grapple 23141
Clamshells - Log Grapple 23148
Leveler 23165
Stump Grinder Fit-Up Kit 23172
30in Standard Bucket 23174
30in Pallet Fork 23175
30in Grapple 23176
TX1000 T Front Guard 23178
Power Box Rake 23702
New Red Paint - Gallon 361-11
Dark Metallic Gray Aerosol Paint 361-12
Paint-Spray, Toro Textured Black 361-13
Semi-Gloss Black Spray Paint 361-9
Air Dry Red Paint - Qt 5340

Notes:

Notes:

TORO®

Count on it.