Form No. 3482-745 Rev B

TORO®

Count on it.

Parts Catalog

Ultra Buggy® e2500-THL

Model No. 68142—Serial No. 420600000 and Up

Register at www.Toro.com.
Original Instructions (EN)

CE

3482-745 B

Ordering Replacement Parts

To order replacement parts, please supply the part number, the quantity, and the description of each part desired.

Understanding Reference Numbers

Each identified part in an illustration has a reference number. The reference number for a part also appears in the parts list, along with other information about the part.

This catalog uses two special reference number formats, one to indicate parts in a service assembly and another to indicate the quantity of a given part in an illustration.

Service Assembly Reference Numbers

Parts in service assemblies have reference numbers in the form a:b. The a represents the reference number of the entire service assembly and the b represents a sequential number unique to each part within the service assembly.

For example, a wheel assembly might be identified by reference number 6, the tire by 6:1, the valve by 6:2, and the wheel by 6:3. When you order the assembly identified by reference number 6, you receive all parts identified by reference numbers 6:1,6:2, and 6:3. However, you may also order any part individually. Reference numbers of this type appear in illustration and in parts lists.

Reference Numbers Indicating Quantity

In an illustration, if a reference number indicates more than one part, the reference number has the form nX y. The n represents the quantity of the part, the X is the multiplication symbol, and the y represents the reference number.

For example, in an illustration, the reference number 2X 37 means that two of the parts identified by reference number 37 are indicated.

Contents

Frame Assembly 4
Hydraulic Assembly 6
Battery Assembly 8
Tower and Hood Assembly 10
Track Assembly 12
Tub Assembly 14
Electrical Assembly 16
Control Assembly No. 163-2672 18
Lift Assembly 20
Platform Assembly 22
Attachments and Accessories 24

© 2026—The Toro® Company
8111 Lyndale Avenue South
Bloomington, MN 55420

Contact us at www.Toro.com.
Printed in the USA.
All Rights Reserved

Frame Assembly

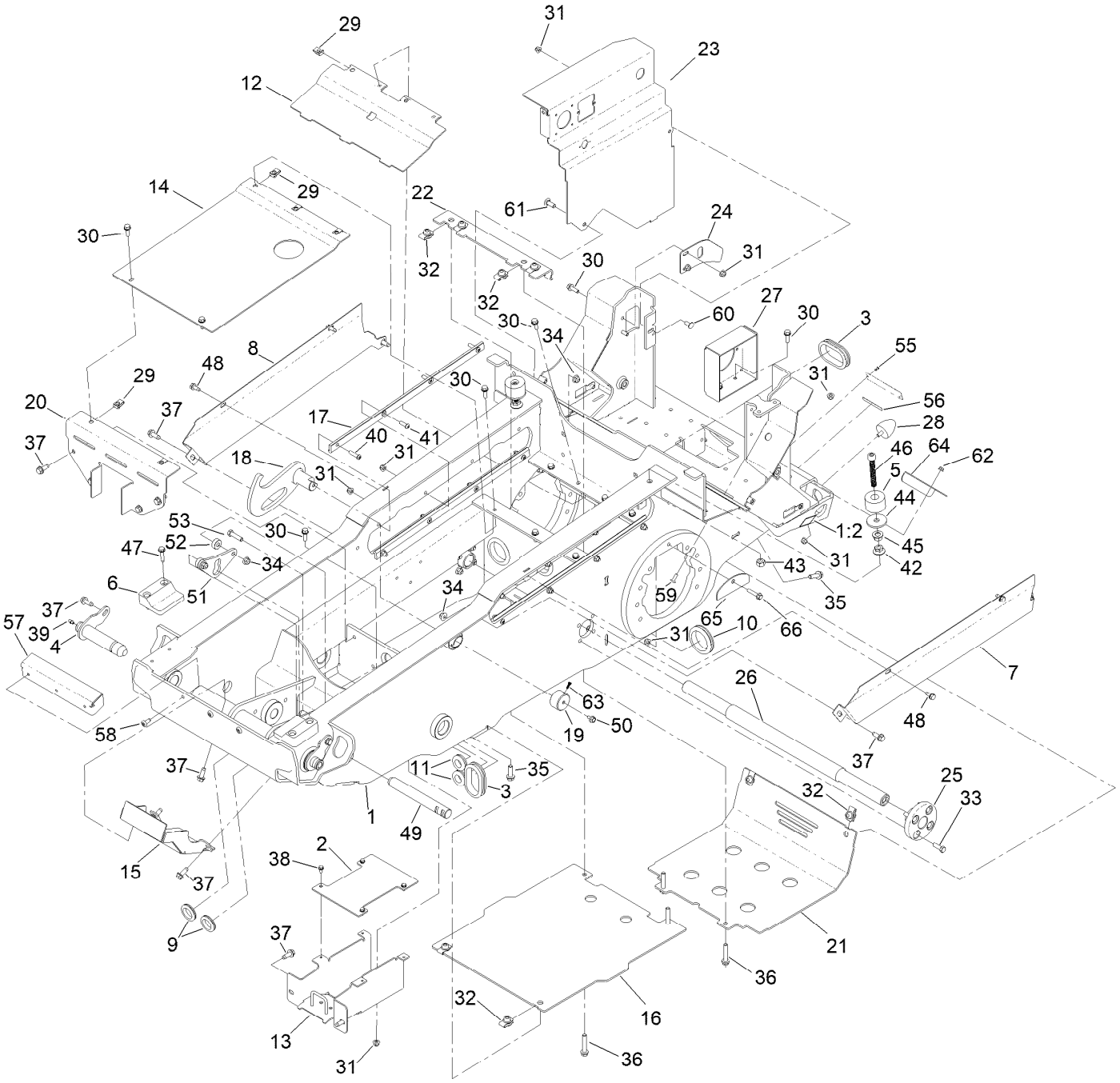

Frame Assembly (continued)

Ref.	Part Number	Qty.	Description
1	163-4465	1	Frame-High Lift
1:2	147-6707	4	Decal-Lift, Tie Down
2	163-2673-05	1	Cover-Hose Tray
3	145-4923	2	Grommet
4	161-9595	2	Pin-Link
5	163-2697	2	Stop-Pu
6	163-2658	2	Stop-Lift
7	163-2698-05	1	Cover-Roller, LH
8	163-2699-05	1	Cover-Roller, RH
9	240-3	2	Grommet-Rubber
10	126-0015	3	Grommet
11	240-4	2	Grommet-Rubber
12	161-5575-05	1	Shield-Motor, Front
13	161-9568-05	1	Bracket-Skid, Center [blk-Txt]
14	161-5521-05	1	Cover-High Lift, HYD
15	161-5511-05	1	Channel-High Lift, Skid Plate
16	161-7598-05	1	Panel-Skid Plate, High Lift
17	163-4420	4	Guide-Track, Roller
18	163-4445-01	1	Scissor Lock, LH [red]
19	163-4432-01	1	Retainer-Lift Lockout
20	161-7592-05	1	Cover-High Lift, HYD
21	163-4476-05	1	Panel-Rear Skid, High Lift
22	163-2669-05	1	Mount-Skid Plate
23	163-7931-05	1	Bracket-Cord Storage
24	161-7587	1	Bracket-Platform Latch
25	132-9075	2	Hub-Mount, Track
26	161-3385	1	Shaft-Track Mount
27	161-5580-05	1	Bracket-Mount, Disconnect
28	114-1926	4	Bumper-Rubber
29	112-3306	13	Nut
30	3234-29	15	Screw-HHF
31	119-4041	29	Nut-HF
32	105-4886	8	Nut-Tinnerman
33	323-18	8	Screw-HH
34	119-4042	11	Nut-HF, NI
35	119-4061	4	Screw-HHF
36	108-3742	4	Screw-HHF
37	139-2428	16	Screw-HWH
38	9266714	4	Screw-HWH
39	302-5	2	Fitting-Grease
40	3290-511	8	Screw-HSBH
41	109-4872	8	Screw-HSH
42	32128-56	2	Nut-HF
43	3217-9	2	Nut-HH
44	75-7730	2	Washer-Thrust
45	139-1689	2	Nut-HF
46	163-2696	2	Screw-HSH,Spl
47	32144-57	4	Screw-Thd Roll
48	32144-11	4	Screw-HWH
49	161-5500	1	Shaft-1.0 DIA X 8.18 Long,Zn
50	3234-28	1	Screw-HHF
51	161-8054-05	1	Retainer-Pin
52	135-0456	2	Spacer
53	323-8	2	Screw-HH
55	3269-29	2	Rivet-Pop
56	133-8061	1	Decal-Warning
57	163-4405-05	1	Bracket-Cover, Pivot Link
58	138-9753	3	Screw
59	1-807512	1	Bolt-CARR
60	137-3061	1	Bolt-CARR
61	3231-22	1	Screw-CARR
62	104-7201	1	Nut-HF, NI
63	163-4447	1	Screw-Hs
64	163-4490-05	1	Bracket-Wire Guard
65	163-4495-05	2	Cover-Motor
66	115-1794	2	Screw-HHF

Hydraulic Assembly

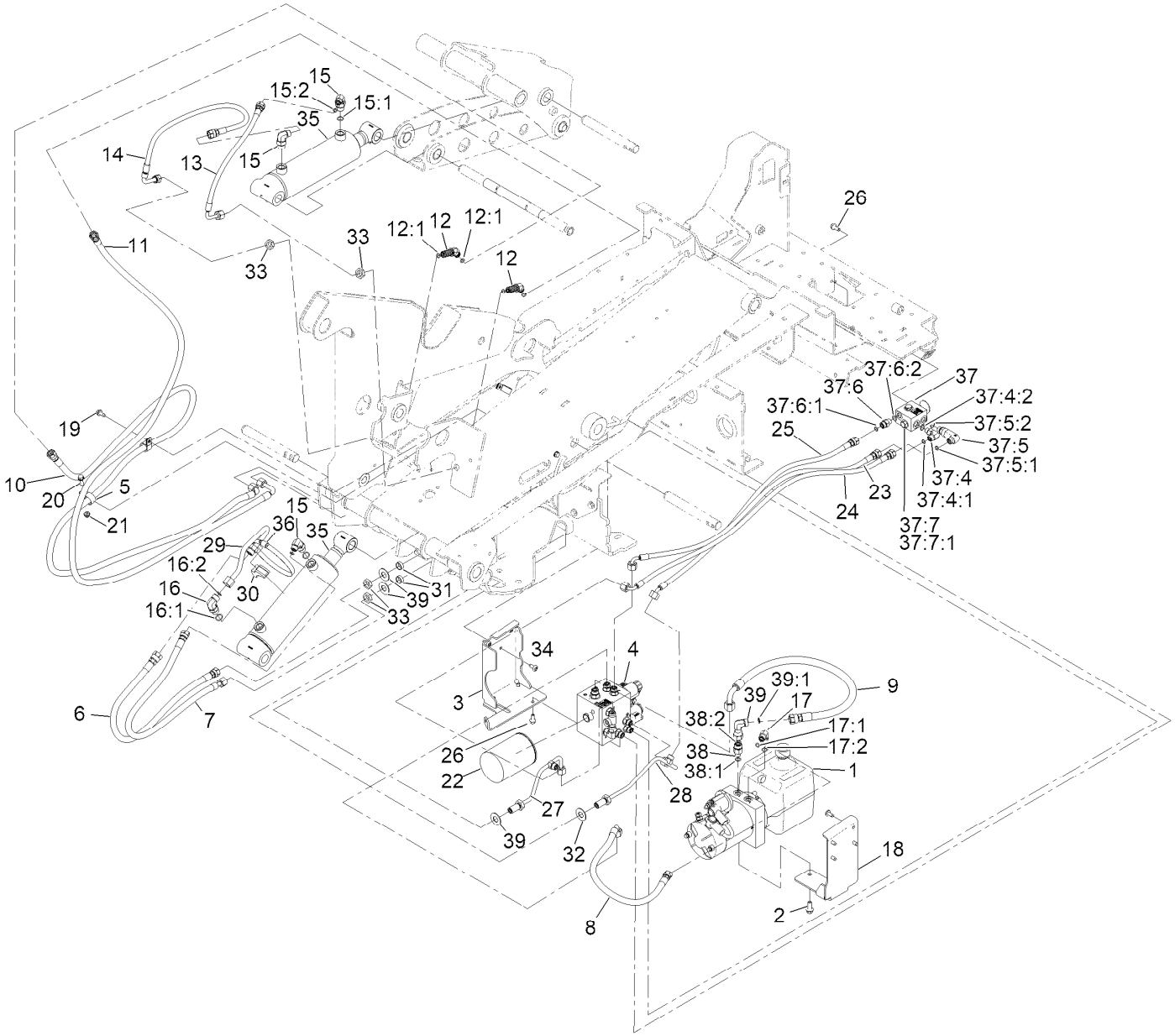

Hydraulic Assembly (continued)

Ref.	Part Number	Qty.	Description
1	147-3542	1	Pump Unit-48Vdc
2	3234-42	2	Screw-HHF
3	161-7582-05	1	Bracket-Mount, Manifold
4	161-9506	1	Manifold-Hydraulic ASM, Lift
5	110-0824	6	R-Clamp
6	161-5508	1	Hose-HYD
7	161-5510	1	Hose-HYD
8	161-8070	1	Hose-HYD
9	161-8071	1	Hose-HYD
10	161-9565	1	Hose-HYD
11	161-8075	1	Hose-HYD
12	340-69	2	Elbow-Bulkhead, 45 DEG
12:1	237-22	2	O-Ring
13	161-8076	1	Hose-HYD
14	161-8077	1	Hose-HYD
15	340-18	3	Fitting-HYD, 90 DEG
15:1	237-79	1	O-Ring
15:2	237-22	1	O-Ring
16	340-98	1	Fitting-Elbow, 90 DEG
16:1	237-79	1	O-Ring
16:2	237-30	1	O-Ring
17	340-77	1	Fitting-Elbow, 90 DEG
17:1	237-22	1	O-Ring
17:2	237-42	1	O-Ring
18	161-7581-05	1	Bracket-Mount, Power Unit
19	32144-11	2	Screw-HWH
20	3234-29	2	Screw-HHF
21	119-4041	2	Nut-HF
22	86-3010	1	Filter-Oil
23	161-8078	1	Hose-HYD
24	161-8072	1	Hose-HYD
25	161-8073	1	Hose-HYD
26	3234-47	5	Screw-HHF
27	161-9540	1	Hydraulic Tube ASM
28	161-9541	1	Hydraulic Tube ASM
29	161-9551	1	Hydraulic Tube ASM
30	161-9570	1	Clamp-Saddle, CYL
31	69-8970	2	Spacer
32	69-8940	4	Washer
33	340-70	4	Nut-Lock
34	138-9753	7	Screw
35	161-3381	2	Cylinder-Hydraulic
36	138-9005	1	Clamp-Hose
37	163-4411	1	Manifold ASM, Manual Override
37:4	340-77	1	Fitting-Elbow, 90 DEG
37:4:1	237-22	1	O-Ring
37:4:2	237-42	1	O-Ring
37:5	145-2645	1	Fitting-Elbow 90 Long
37:5:1	237-22	1	O-Ring
37:5:2	237-42	1	O-Ring
37:6	340-2	1	Fitting-Straight
37:6:1	237-22	1	O-Ring
37:6:2	237-42	1	O-Ring
37:7	353-508	1	Plug-HH
37:7:1	237-42	1	O-Ring
38	340-5	1	Fitting-Straight
38:1	237-42	1	O-Ring
38:2	237-30	1	O-Ring
39	94-6031	1	Elbow-90
39:1	237-30	1	O-Ring

Battery Assembly

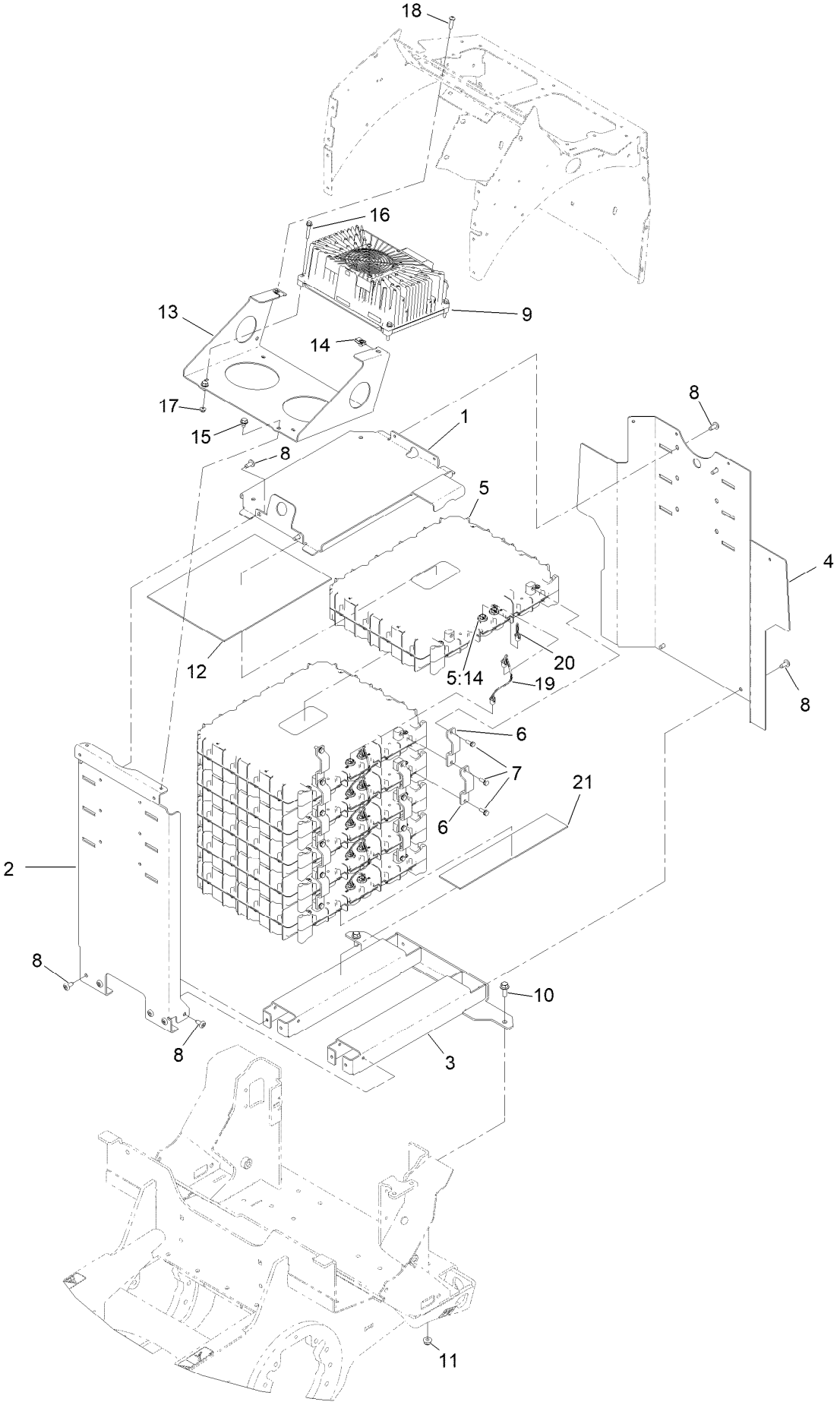

Battery Assembly (continued)

Ref.	Part Number	Qty.	Description
1	161-5565-05	1	Bracket-Clamp, Battery
2	161-5563-05	1	Bracket-Battery Front
3	161-5568-05	1	Frame-Battery Base [blk-Txt]
4	161-5564-05	1	Bracket-Battery,Rear
5	145-5385	6	Battery ASM
5:2	145-5338	1	Decal-Warning, Battery ●
5:14	32180-466	2	Nut-Mounting, Jwpf Panel Lock
6	147-3877	10	Bar-Bus, 400A
7	145-5783	12	Screw-Sems
8	138-9753	11	Screw
9	145-5393	1	Charger-Onboard
10	3234-42	2	Screw-HHF
11	119-4042	2	Nut-HF, NI
12	145-2366	1	Foam-Battery Box
13	161-9549-05	1	Bracket-Mount, Charger
14	112-3306	2	Nut
15	9266934	2	Screw
16	94-5781	4	Screw-HHF
17	104-7201	4	Nut-HF, NI
18	109-4872	2	Screw-HSH
19	140-9565	5	Harness-Wire, Data Interface
20	122-2323	1	Harness-Wire, Can Terminator
21	163-4489	2	Foam-Battery Box

● Not illustrated

Tower and Hood Assembly

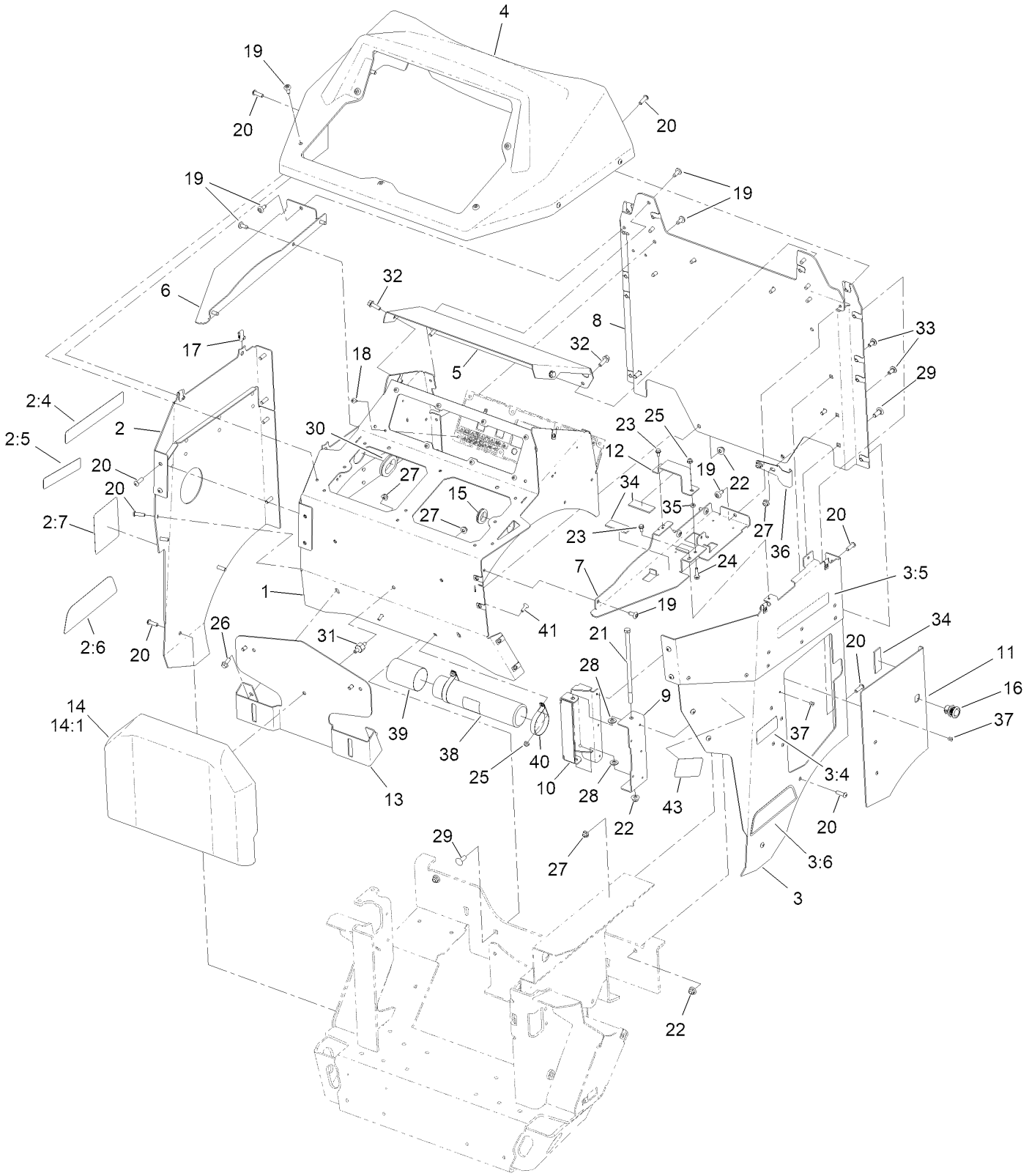

Tower and Hood Assembly (continued)

Ref.	Part Number	Qty.	Description
1	161-5537-05	1	Tower, ASM [blk-Txt]
2	163-2670	1	Panel-LH ASM, High Lift
2:4	161-5515	1	Decal-E2500Thl
2:5	145-1175	1	Decal-Service, Shut-Off
2:6	145-1172	1	Decal-Hypercell
2:7	163-4474	1	Decal-Service
3	163-2671	1	Panel-RH ASM, High Lift
3:4	161-2443	1	Decal-Charging
3:5	161-5515	1	Decal-E2500Thl
3:6	145-1172	1	Decal-Hypercell
4	161-9520	1	Panel-Dash
5	161-5547-05	1	Cover-Tower, Charger
6	161-5566-05	1	Panel-Tower, LH Closeoff
7	161-5567-05	1	Panel-Tower, RH Closeoff
8	161-9522-05	1	Panel-Tower, Front
9	161-7573-05	1	Bracket-Mount, Door
10	161-9546	1	Hinge ASM, Charge Door
11	161-7571-01	1	Door-Cord Storage
12	161-9556-05	1	Bracket-Battery Strap
13	161-9542-05	1	Bracket-Pad
14	161-3555	1	Pad-Thigh
14:1	161-3554	1	Cover Pad
15	240-5	1	Grommet
16	163-4429	1	Latch-Push Button
17	112-3306	26	Nut
18	142-7097	8	Screw
19	138-9753	23	Screw
20	109-4872	26	Screw-HSH
21	99-7203	1	Screw-HH
22	119-4042	5	Nut-HF, NI
23	93-6083	2	Screw-HWH
24	120-4654	1	Screw-HHF
25	104-7201	3	Nut-HF, NI
26	3234-47	2	Screw-HHF
27	119-4041	8	Nut-HF
28	48-9220	2	Washer-Flat
29	3231-22	4	Screw-CARR
30	110-5090	1	Grommet
31	137-9294	3	Stud-Special
32	3234-29	4	Screw-HHF
33	137-3061	3	Bolt-CARR
34	133-0081	5	Strip-Foam
35	3218-1	1	Nut-Jam
36	163-4430	1	Bracket-Latch Catch
37	130-8451	8	Rivet-Trifold
38	104-7050	1	Tube-Manual
39	104-7048	1	Cap-Housing
40	107-1865	2	R-Clamp
41	1-807512	2	Bolt-CARR
43	100-4627	2	Reflector

Track Assembly

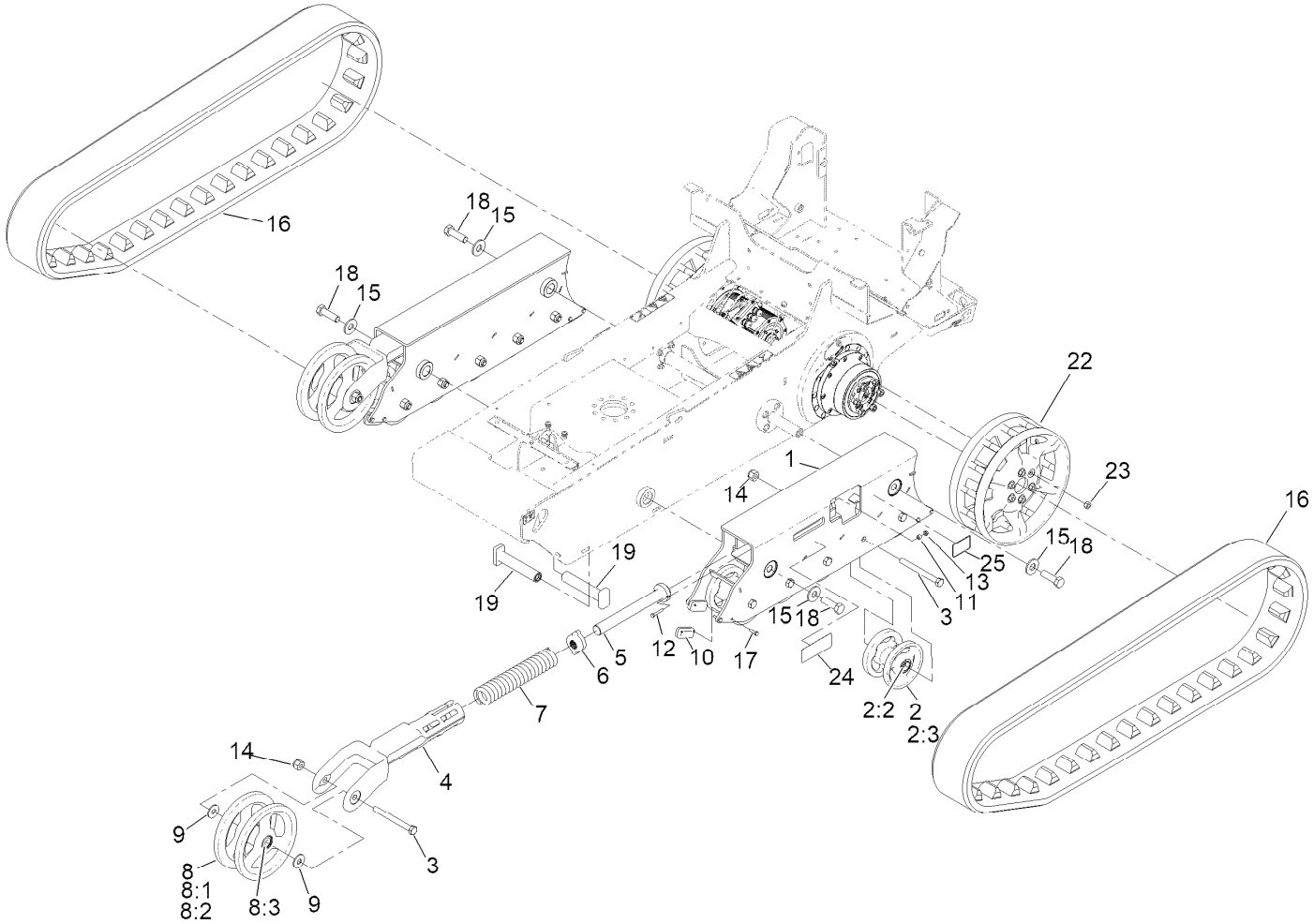

Track Assembly (continued)

Ref.	Part Number	Qty.	Description
1	163-7941	1	Frame-Track, LH
2	138-5231	10	Wheel ASM
2:2	138-0547	2	Bearing-Ball
2:3	130-7564	1	Spacer-Wheel
3	327-17	12	Screw-HH
4	108-4691-05	2	Arm-Tensioner, [blk-Txt]
5	127-9563	2	Bolt-Tensioner
6	108-4664	2	Block-Tensioner
7	95-3624	2	Spring-Compression
8	104-5745	2	Tensioner Wheel ASM
8:1	104-5747-03	1	Wheel-Tensioner
8:2	98-9835	1	Spacer-Wheel, Tensioner
8:3	120-5378	2	Bearing-Ball
9	3256-7	4	Washer-Flat
10	132-6053	8	Block-Track
11	98-4799	2	Spacer
12	321-37	2	Screw-HH
13	32128-32	2	Nut-HHF
14	3296-24	12	Nut-Hex
15	99-2659	4	Washer
16	136-5846	2	Electric Ultra Buggy Track
17	321-6	16	Screw-HH
18	328-2	4	Screw-HH
19	163-7909	2	Pin-Track
22	163-7930-05	2	Wheel-Drive, Buggy [blk-Txt]
23	104-9914	12	Nut-Hex
24	139-7201	2	Decal-Warning, Bystanders
25	139-7709	2	Decal-Water Level

Tub Assembly

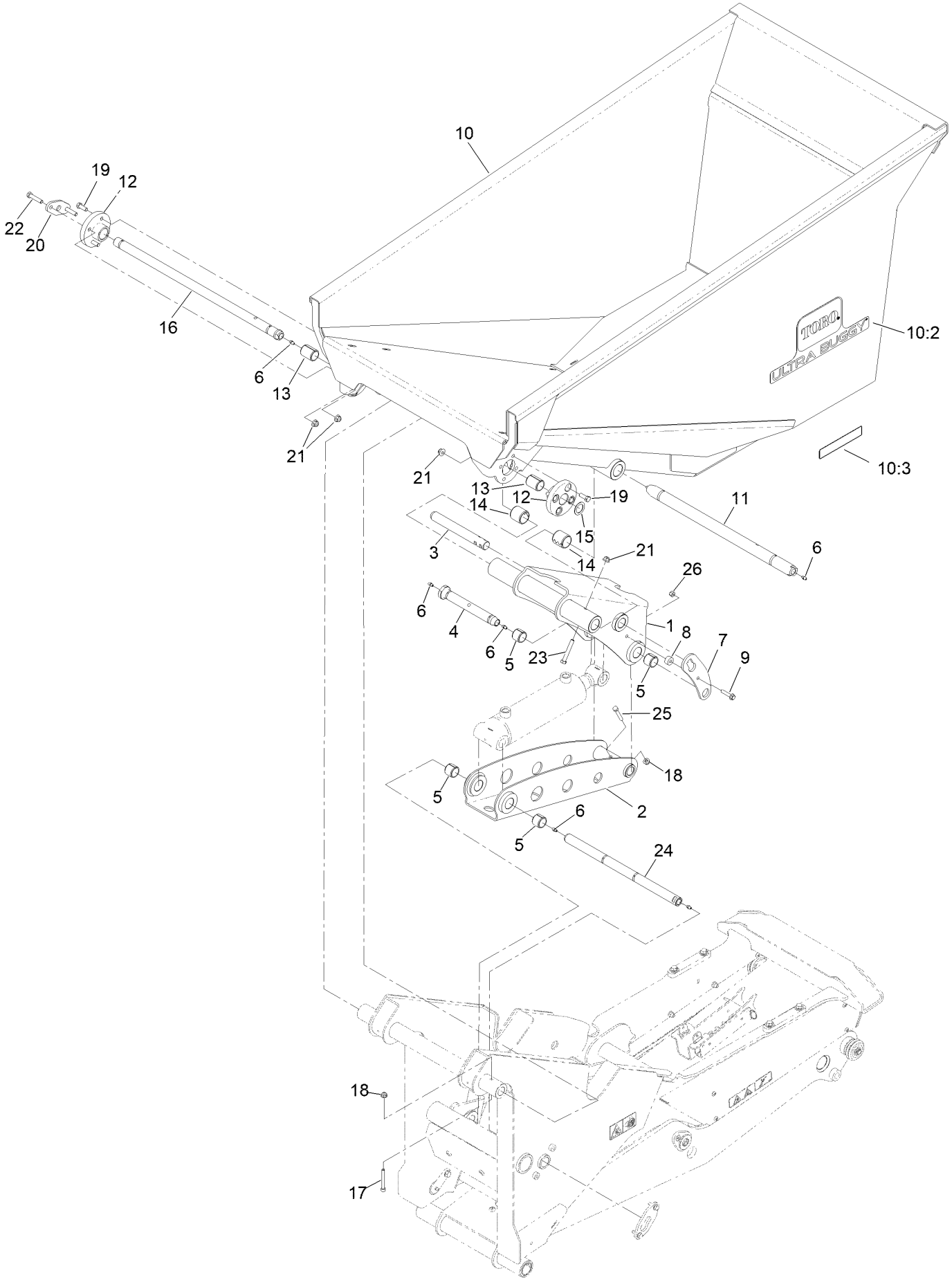

Tub Assembly (continued)

Ref.	Part Number	Qty.	Description
1	161-9511-05	1	Link-Dump, Hopper [blk-Txt]
2	161-3343-05	1	Link-Dump, Frame [blk-Txt]
3	161-5500	1	Shaft-1.0 DIA X 8.18 Long,Zn
4	161-3391	1	Shaft-1.0 DIA X 7.34 Long
5	98-4871	4	Bushing-Tension
6	302-5	8	Fitting-Grease
7	163-4498-05	1	Retainer-Pin
8	132-9064	1	Bushing-Brake
9	115-1794	1	Screw-HHF
10	137-9290	1	Hopper ASM
10:2	161-2909	2	Decal-Tub, Ultra Buggy
10:3	115-4858	2	Decal-Danger
11	161-9586	1	Pin-
12	132-9075	2	Hub-Mount, Track
13	130-5200	2	Bushing-Spring
14	139-5737	2	Bushing-Spring
15	10-8110	1	Washer-Thrust
16	161-3389	1	Shaft-1.25 DIA X 25.14 Long, Zn
17	3274-40	1	Screw-HSH
18	119-4041	2	Nut-HF
19	135-7915	6	Screw-HH,
20	161-9598-05	1	Plate-Bushing Retainer
21	119-4042	9	Nut-HF, NI
22	323-52	2	Screw-HH
23	323-47	1	Screw-HH
24	163-2660	1	Shaft-ASM, Dump
25	322-10	1	Screw-HH
26	3296-29	1	Nut-Lock, NI

Electrical Assembly

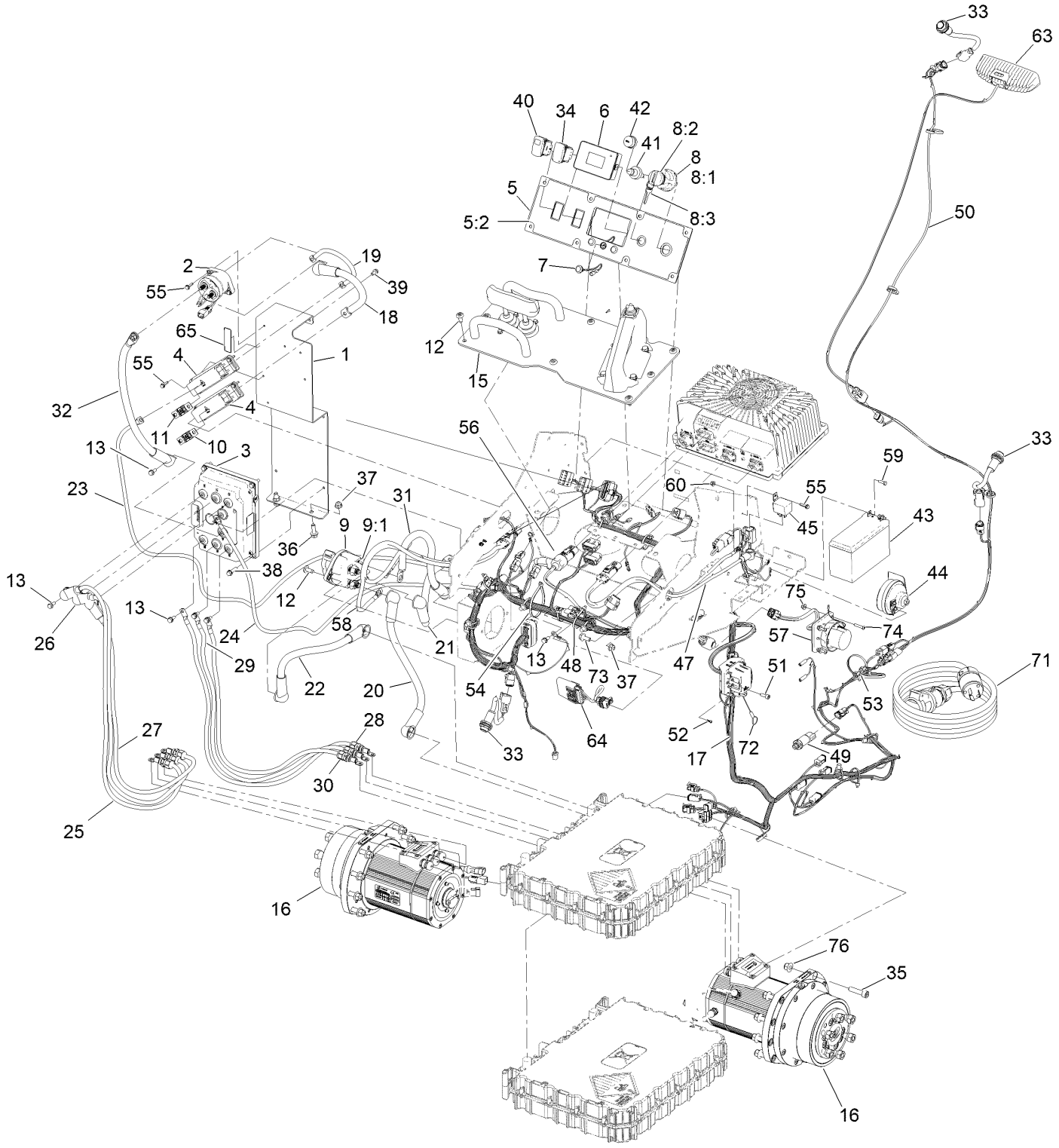

Electrical Assembly (continued)

Ref.	Part Number	Qty.	Description
1	161-5579-05	1	Bracket-Mount, Electrical
2	122-2594	1	Contactor-48V
3	138-8984	1	Inv/Ctrlr-48V, Dual 94Arms
4	145-4958	2	Holder-Fuse
4:1	3253-4	2	Washer-Lock ●
4:2	3256-74	4	Washer-Flat ●
4:3	33014-00	4	Nut-Hex ●
5	137-9288	1	Panel-Instrument
5:2	147-9721	1	Decal-Display Panel
6	122-1201	1	Module-Display
7	136-9678	3	Cable Assy-Pushbutton
8	122-2513	1	Switch-Ignition, Suns
8:1	121-5160	1	Nut-Hex
8:2	122-2704	1	Nut-Face, M22 (Plastic)
8:3	121-5162	1	Set-Key, Ignition
9	122-0603	1	Switch-Disconnect
9:1	33006-00	1	Nut-HF
10	122-2959	1	Fuse-350A
11	122-2559	1	Fuse-100 Amp
12	138-9753	10	Screw
13	145-5782	8	Screw-Sems
15	163-2672	1	Controls ASM, E2500Thl
16	163-4401	2	Motor/Gearbox ASM-48V 3Kw 41:1 Rdctn
16:1	147-9107	1	Cassette Seal Ring ●
17	122-3106	1	Harness-Wire, Main
18	122-3109	1	Cable-Battery, Rd ASM
19	122-3111	1	Cable-Battery, Rd ASM
20	122-3107	1	Cable-Battery, Rd ASM
21	122-3108	1	Cable-Battery, Rd ASM
22	122-3120	1	Cable-Battery, Bk ASM
23	122-3121	1	Cable-Battery, Rd ASM
24	122-3118	1	Cable-Battery, Bk ASM
25	122-4194	1	Cable-Battery, Rd ASM
26	122-4195	1	Cable-Battery, Rd ASM
27	122-4196	1	Cable-Battery, Rd ASM
28	122-4197	1	Cable-Battery, Rd ASM
29	122-4198	1	Cable-Battery, Rd ASM
30	122-4199	1	Cable-Battery, Rd ASM
31	122-3119	1	Cable-Battery, Bk ASM
32	122-3110	1	Cable-Battery, Rd ASM
33	139-7238	3	Sensor-Proximity, N.O.
33:1	117-3207	2	Nut-Hex ●
33:2	117-3208	2	Washer-Lock, Internal Tooth ●
34	112-9421	1	Switch
35	09718	16	Screw-Sh
36	3234-29	2	Screw-HHF
37	119-4041	3	Nut-HF
38	32144-86	4	Screw-HWHTF
39	93-6083	2	Screw-HWH
40	122-2719	1	Switch-Rocker, On-None-(On)
41	112-3324	1	Switch-Horn
42	112-3313	1	Nut-Weatherproof
43	112-9621	1	Battery-Wet, 12V 9Ah, Sealed W/Hrdwr
44	116749	1	Horn
45	122-3200	1	Relay
47	122-3658	1	Harness-Wire,DC Aux
48	3290-378	3	Tie-Cable
49	119-0011	1	Pressure Transducer ASM
49:1	237-78	1	O-Ring ●
50	122-3691	1	Harness-Wire, Extension
51	105-2409	2	Screw-HSH
52	363-8289	2	Scr,TAP,6-19X7/16,Phph,Stl,Rohs
53	3290-378	1	Tie-Cable
54	3290-379	1	Tie-Cable
55	100-4351	7	Screw-HWH
56	122-3656	1	Harness-Wire, AC In
57	122-4099	1	Harness-Wire, Inlet, 60309
58	122-3659	1	Harness-Wire,DC Out
59	60-6910	2	Screw-HH
60	120-4580	2	Nut-HF
63	126-7839	1	Light-LED
64	119-4330	1	Isolated Can Module ASM
65	161-5516	1	Decal-Electrical
71	122-3491	1	Cable-Assembly, Charger
72	163-4491	1	Strap-Cable, Cap
73	3234-47	1	Screw-HHF
74	108-3153	4	Screw-HSBH
75	120-4578	4	Nut-HF
76	103-9511	16	Nut-Flg

● Not illustrated

Control Assembly No. 163-2672

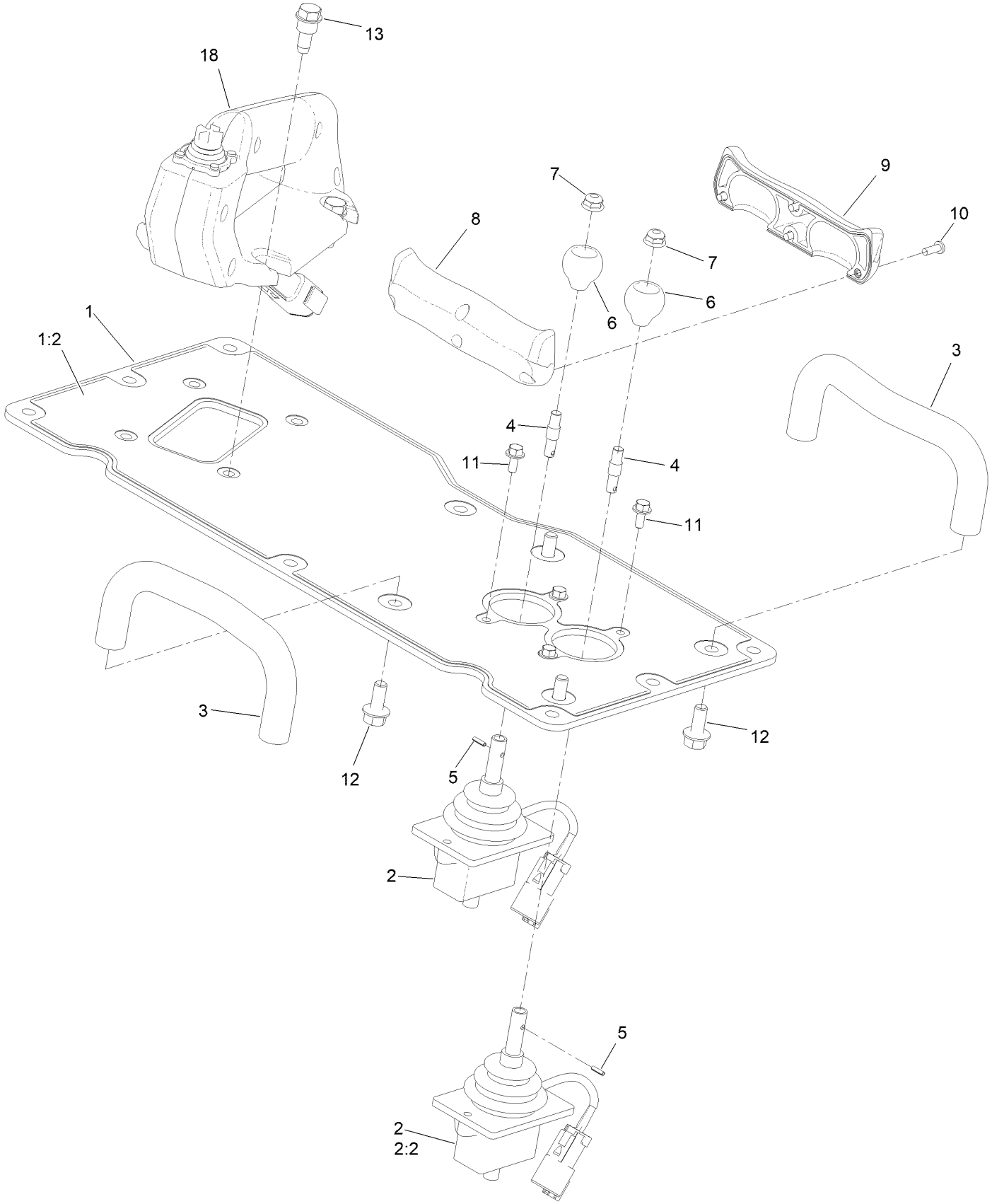

Control Assembly No. 163-2672 (continued)

Ref.	Part Number	Qty.	Description
1	163-2653	1	Plate-Controls, E2500Thl
1:2	147-9720	1	Decal-Controls, E2500Thl
2	136-4784	2	Lever-Control
2:2	136-4894	1	Kit-Rtn,
3	138-4693	2	Bar-Reference
4	137-0431	2	Shaft-Handle
5	137-0432	2	Pin-Roll
6	130-7723	2	Ball-Traction
7	104-7201	2	Nut-HF, NI
8	139-1167	1	Handle-Rear
9	139-1166	1	Handle-Front
10	94-6961	4	Screw
11	120-4579	4	Screw-HHF
12	3234-5	4	Screw-HHF
13	115-1958	4	Bolt-Shoulder
18	163-4409	1	Grip-Assembly

Lift Assembly

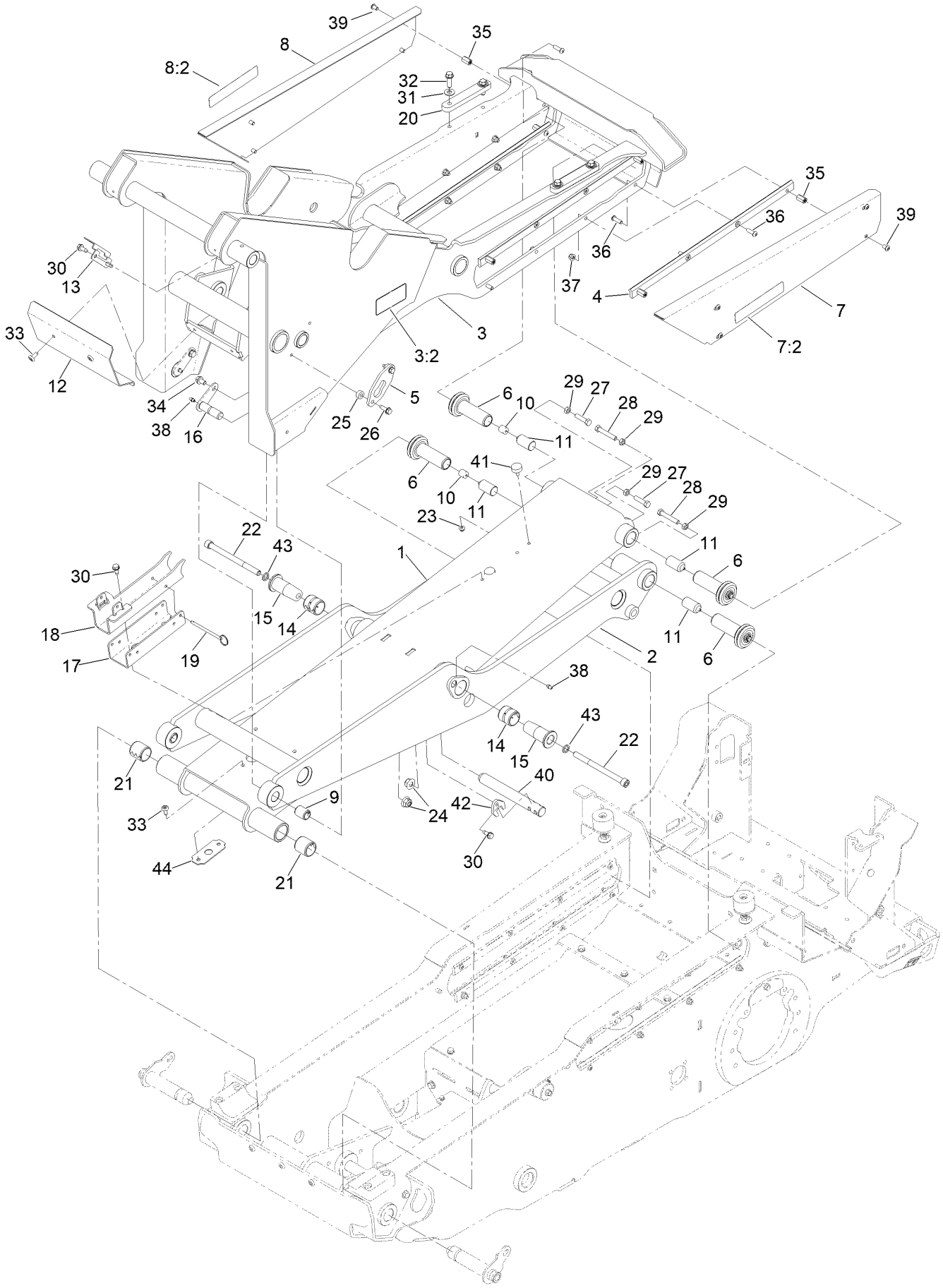

Lift Assembly (continued)

Ref.	Part Number	Qty.	Description
1	147-9741-05	1	Link-Pivot, Scissor [blk-Txt]
2	161-3322-05	1	Frame-High Lift, Scissor [blk-T
3	137-9291	1	Lift Frame ASM
3:2	125-4959	2	Decal-Warning, Crushing
4	163-4420	4	Guide-Track, Roller
5	161-7594-05	1	Retainer-Pin
6	163-4404	4	Guide Wheel Assy
7	137-9292	1	Roller Cover ASM, LH
7:2	115-4858	1	Decal-Danger
8	137-9293	1	Roller Cover ASM, RH
8:2	115-4858	1	Decal-Danger
9	161-3312	2	Bushing-Spring
10	161-3378	2	Bumper
11	161-3379	4	Shaft-Guide Roller, Plunger
12	161-9510-05	1	Bracket-Light
13	161-7572-05	1	Bracket-Sensor, Prox
14	147-6875	2	Bushing-Spring
15	161-9585	2	Pin-Taper
16	120-5575	2	Pin
17	161-7570-05	1	Bracket-Mount, Locking Arm
18	163-7916	1	Arm-Locking
19	161-7595	1	Pin-Cotterless
20	163-2685	2	Stop-Hopper
21	139-5737	2	Bushing-Spring
22	161-9597	2	Screw-HSH,Spl
23	104-7201	2	Nut-HF, NI
24	142-7784	2	Nut-HF, NI
25	140-3461	2	Spacer
26	701243	2	Screw-Thd Roll, HWH
27	323-50	2	Bolt-HH
28	104-3396	2	Screw-HH
29	3217-7	4	Nut-Hex
30	32144-11	5	Screw-HWH
31	3256-4	4	Washer-Flat
32	32144-109	4	Screw-Thd
33	138-9753	2	Screw
34	32144-15	2	Screw-HHFTF
35	161-8080	8	Standoff-Hex
36	109-4872	16	Screw-HSH
37	119-4041	10	Nut-HF
38	302-5	4	Fitting-Grease
39	131-1884	8	Screw-HSBH,Patch
40	161-5500	1	Shaft-1.0 DIA X 8.18 Long,Zn
41	138-2662	2	Bumper-Rubber
42	137-9285-05	1	Retainer-Pin
43	62-7120	2	Washer
44	161-7588-05	1	Bracket-Prox Sensor

Platform Assembly

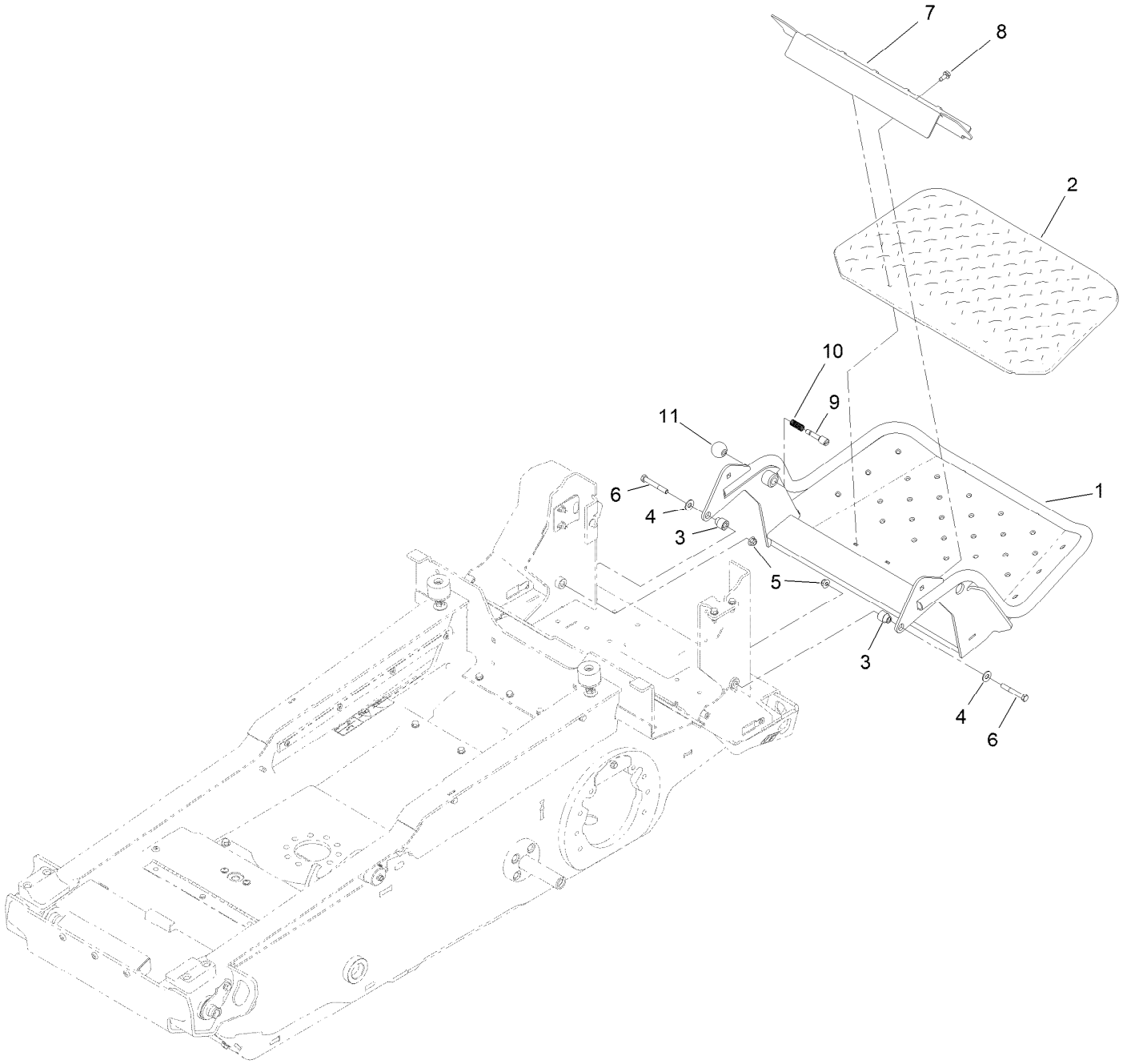

Platform Assembly (continued)

Ref.	Part Number	Qty.	Description
1	161-6796-05	1	Platform ASM [blk-Txt]
2	126-7157	1	Mat-Platform
3	132-7583	2	Bushing-Flanged
4	3256-4	2	Washer-Flat
5	119-4042	2	Nut-HF, NI
6	323-13	2	Screw-HH
7	136-5669-05	1	Clamp-Shield
8	32144-70	2	Screw-HWHTF
9	119-8650	1	Pin-Latch
10	114-5348	1	Spring
11	1-603175	1	Knob-Ball

Attachments and Accessories

For 68142 — Ultra Buggy e2500-THL

Product Name	Model/Part
Charger Cable Assembly	122-3489
Charger Cable Assembly	122-3490
Charger Cable Assembly	122-4204
Brush Kit	163-4400
SAE J1772 Charging Kit	163-7922
IEC 62196 Charging Kit	163-7924
CE Kit	163-7932
Toro Red 12oz Aerosol Can	361-10
New Red Paint - Gallon	361-11
Semi-Gloss Black Spray Paint	361-9

Notes:

Notes:

Notes:

TORO®

Count on it.