Form No. 3351-357 Rev A

Tru Trak® Sulky

Fixed Deck Mid Size Mower Attachment

Model No. 30109—Serial No. 240000001 and Up

Operator's Manual

Register your product at www.Toro.com

Original Instructions (EN)

Contents

	Page
Introduction	2
Safety	2
Loose Parts	3
Installing the Axle	4
Installing the Sulky Assemblies	5
Adjusting the Handle Height	5
Adjusting the Drive Belts on a Gear Drive Machine	5
Installing the Lanyards on a Hydro Drive Machine	6
Installing the Lanyards on a Gear Drive Machine	6
Installing the Lanyard Adjustment Bolts	6
Installing the Weight Kit	7
Removing the Weight	7
Adjusting the Parking Brake	7
Operation	7
Operating Tips	7
Positioning the Sulky for Transport	7
Maintenance	8
Recommended Maintenance Schedule	8
Checking the Tire Pressure	8
Greasing the Sulky	8
Adjusting the Sulky Transport Position	8

Introduction

Read this manual carefully to learn how to operate and maintain your product properly. The information in this manual can help you and others avoid injury and product damage. Although Toro designs and produces safe products, you are responsible for operating the product properly and safely.

You may contact Toro directly at www.Toro.com for product and accessory information, help finding a dealer, or to register your product.

Whenever you need service, genuine Toro parts, or additional information, contact an Authorized Service Dealer or Toro Customer Service and have the model number of your product ready. Figure 1 illustrates the location of the model and serial numbers on the product.

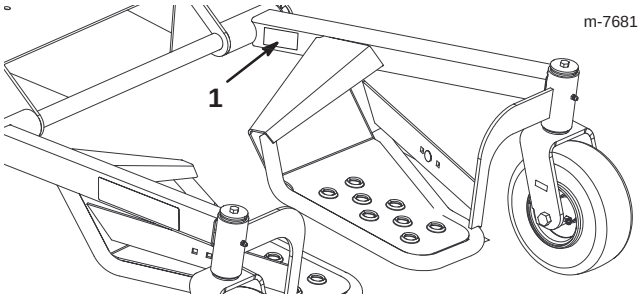

Figure 1

1. Location of the model and serial numbers

Write the product model and serial numbers in the space below:

Model No. _____

Serial No. _____

This manual identifies potential hazards and has special safety messages that help you and others avoid personal injury and even death. ***Danger***, ***Warning***, and ***Caution*** are signal words used to identify the level of hazard. However, regardless of the hazard, be extremely careful.

Danger signals an extreme hazard that *will* cause serious injury or death if you do not follow the recommended precautions.

Warning signals a hazard that *may* cause serious injury or death if you do not follow the recommended precautions.

Caution signals a hazard that may cause minor or moderate injury if you do not follow the recommended precautions.

This manual uses two other words to highlight information. **Important** calls attention to special mechanical information and **Note:** emphasizes general information worthy of special attention.

Safety

Improper use or maintenance by the operator or owner can result in injury. To reduce the potential for injury, comply with these safety instructions and always pay attention to the safety alert ⚠ symbol, which means CAUTION, WARNING, or DANGER—"personal safety instruction." Failure to comply with the instruction may result in personal injury or death.

©2004 by The Toro Company

8111 Lyndale Avenue South
Bloomington, MN 55420-1196

Contact us at www.Toro.com
All Rights Reserved
Printed in the USA

General Operation

- Do not modify the sulky or use it on non-approved machines.
- Ensure that the sulky is properly attached to the machine and is in good working order prior to use.
- Allow only the machine operator on the sulky.
- Do not allow use of the sulky by untrained operators.
- Use appropriate personal protective apparatus for eyes, ears, feet, hands, and head.
- Practice operating the machine without the sulky until familiar with the controls.
- Practice operation of the machine with sulky attached on large open, level terrain with no obstacles present before use. The sulky will affect the machine operation, especially on slopes, when turning, and when stopping.
- Use caution when riding the sulky over curbs, rocks, roots, or other obstructions.
- Slow down before making turns and use extra caution on rough terrain and on slopes.
- Travel across slopes, avoiding operation on steep slopes.
- Look behind and down before backing up to be sure of a clear path. Use extra care when operating in reverse.
- Dismount and latch the sulky in the transport position when loading and unloading the machine.

Loose Parts

Note: Use the chart below to verify all parts have been shipped.

Note: Determine the left and right sides of the machine from the normal operating position.

DESCRIPTION	QTY.	USE
Axle	1	Installing the axle on a hydro drive machine
New long spacer	4	
Locknut, 3/8 inch	4	
Bolt, 3/8 x 4-1/2 inch	1	
Washer, 3/8 inch	1	
Short spacer	1	
Axle	1	Installing the axle on a gear drive machine
Flat spacer	2	
Bolt, 3/8 x 1-1/4 inch	4	
Locknut, 3/8 inch	4	
Left sulky assembly	1	Installing the sulky assemblies
Right sulky assembly	1	
Washer, 1-3/4 inch	2	
Lynch pin	2	
Lanyard	2	Install the lanyard and adjustment bolt
Bolt, 5/16 x 1–1/4 inch	2	
Washer, 9/16 inch	2	
Washer, 1/2 inch	2	
Locknut, 5/16 inch	2	
Spacer	2	
Locknut, 3/8 inch	2	

Warning

Improper installation or application of a Tru Trak Sulky can effect the stability and control of the Mid–Sized Mowers, which could cause personal injury or death.

- **Weight kits mounted in the rear position need be removed when a Tru Trak Sulky is installed.**
- **A weight kit installed in the front position is required on Mid Size mowers that are equipped with a 44 inch mower and Tru Trak Sulky.**
- **The parking brake must be adjusted, on units equipped with a parking brake, when a Tru Trak Sulky is installed.**
- **The Tru–Track Sulky is not recommended on Mid Size mowers equipped with 36 inch mowers.**

Installing the Axle

The procedure for installing the axle on your machine varies, depending on the drive system and control mechanism of your machine. Refer to the section that pertains to your machine.

Installing the Axle on a Hydro Drive Machine

1. Stop the engine, wait for all moving parts to stop, and remove the ignition key.
2. Remove the 4 bolts, spacers, and nuts securing the bottom of the two linkage guards on both sides of the frame (2 bolts, spacers, and nuts on each side) (Fig. 3). Save only 3 of the bolts and discard the spacers and nuts.
3. Insert the axle mounting brackets between the linkage guards and the frame (Fig. 2).

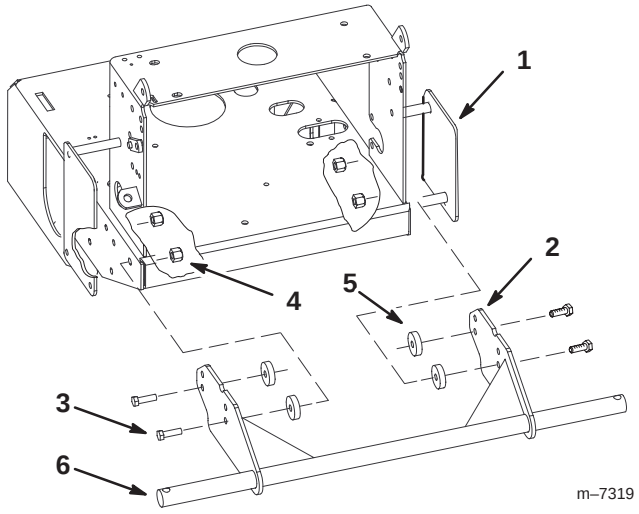

Figure 2

1. Linkage guard
2. Axle mounting bracket
3. Bolts, 3/8 x 1-1/4 inch
4. Locknut, 3/8 inch
5. Flat spacer
6. Axle

4. Insert the new long spacers between the axle mounting brackets and the frame on both sides, lining up the holes (Fig. 2).
5. Install the axle to left side of the machine using 2 bolts previously removed and 2 locknuts (3/8 inch) in the top holes in the axle (Figs. 3 and 4).

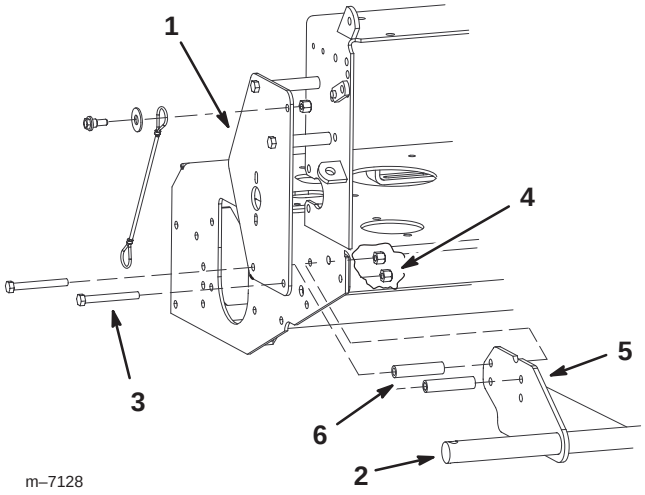

Figure 3

Left side of mower

1. Linkage guard
2. Axle
3. Previously removed bolt
4. Locknut, 3/8 inch
5. Axle mounting bracket
6. New long spacer

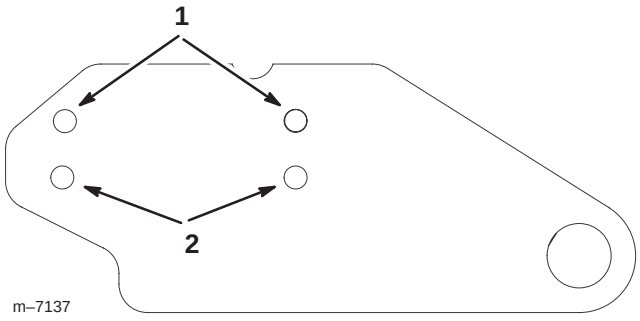

Figure 4

1. For hydro units
2. For gear drive units

6. Using the upper rear hole, install the axle to right side of the machine using 1 previously removed bolt, 1 new long spacer, and 1 locknut (3/8 inch) (Figs. 4 and 5).

7. Using the upper front hole, install the axle to right side of the machine using 1 bolt (3/8 x 4–1/2 inch), 1 new long spacer, 1 short spacer on the outside of the guard, and 1 locknut (3/8 inch) (Figs. 4 and 5).

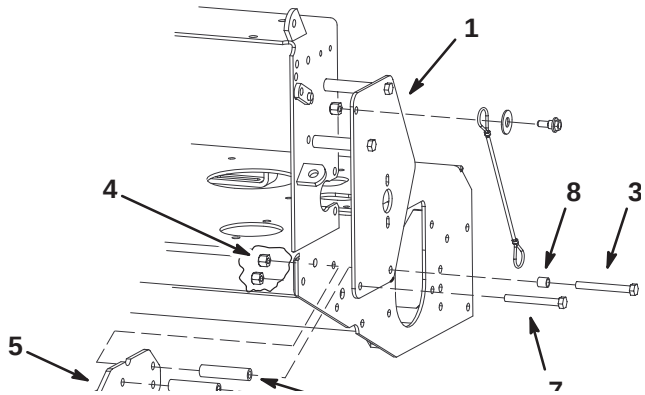

Figure 5

Right side of mower

1. Linkage guard
2. Axle
3. Bolts, 3/8 x 4–1/2 inch
4. Locknut, 3/8 inch
5. Axle mounting bracket
6. New long spacer
7. Previously removed bolt
8. Short spacer

Installing the Axle on a Gear Drive Machine

1. Stop the engine, wait for all moving parts to stop, and remove the ignition key.

2. Insert the axle mounting brackets between the pulley guards and the frame (Fig. 2).

3. Insert the flat spacers between the axle mounting brackets and the frame, lining up the holes (Fig. 2).

4. Using the bottom holes in the axle mounting bracket, install the 4 bolts (3/8 x 1-1/4 inch) and locknuts (3/8 inch) supplied with the sulky, secure the axle and the spacers as illustrated in Figure 2.

Installing the Sulky Assemblies

1. Slide the mounting tube on each sulky assembly over the ends of the axle with the foot rests towards the inside (Fig. 6).

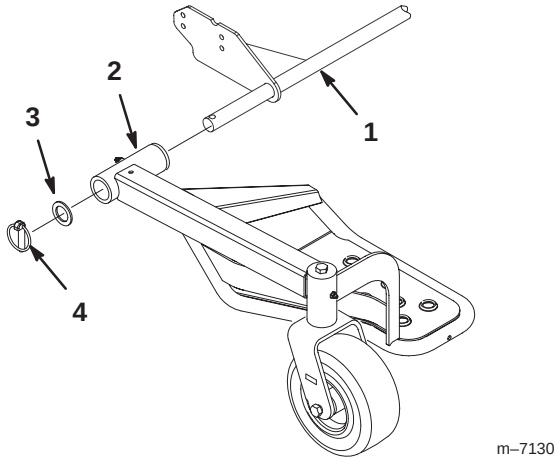

Figure 6

1. Axle
2. Sulky assembly
3. Washer, 1-3/4 inch
4. Lynch pin

2. Secure the sulky assemblies using a washer (1-3/4 inch) and lynch pin on each side (Fig. 6).

3. Grease the sulky; refer to Greasing the Sulky, page 8.

Adjusting the Handle Height

Because the sulky raises you several inches off of the ground, adjust the handle height to accommodate you on the sulky comfortably. Refer to your machine Operator's Manual for more information on changing the handle height.

Adjusting the Drive Belts on a Gear Drive Machine

Because the sulky increases the weight of the machine, the drive belts may need to be adjusted. Refer to your machine Operator's Manual for more information on adjusting the drive belts.

Installing the Lanyards on a Hydro Drive Machine

1. Install the lanyard to the upper rear hole in the linkage guard. Secure the lanyard with 1 shoulder bolt, 1 washer (9/16 inch) and 1 locknut (9/16 inch) (Fig. 7).

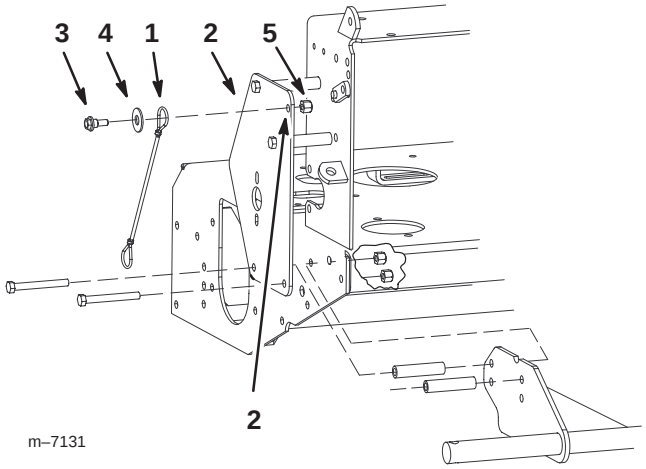

Figure 7

1. Lanyard
2. Linkage guard
3. Shoulder bolt
4. Washer, 9/16 inch
5. Locknut, 3/8 inch
6. Upper rear hole

2. Install the other lanyard on the opposite side.

Installing the Lanyards on a Gear Drive Machine

1. Remove the bolt and nut in the upper hole where the handle is connected to the frame.

Note: The lanyard on the left side needs to be between the frame and the throttle cable (Fig. 8).

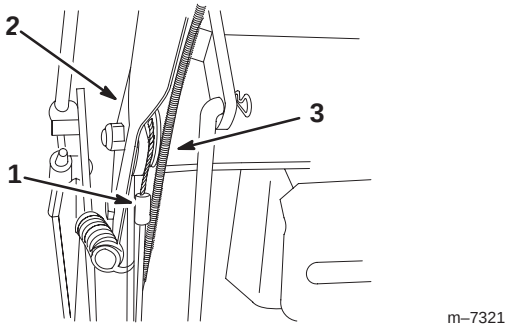

Figure 8

1. Lanyard
2. Handle
3. Throttle cable

2. Install the lanyard with 1 shoulder bolt, 1 washer (9/16 inch) and 1 locknut (9/16 inch) (Fig. 9).

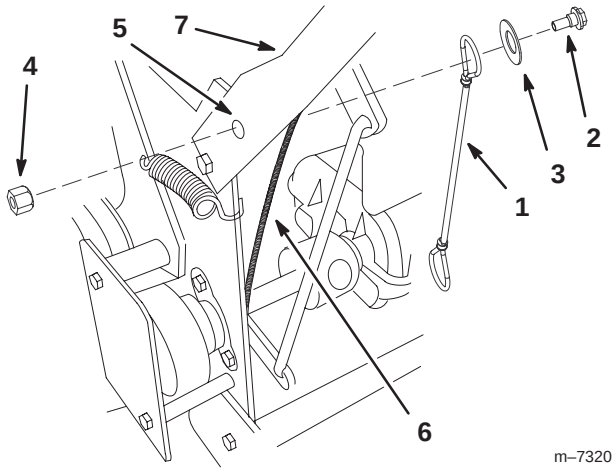

Figure 9

1. Lanyard
2. Shoulder bolt
3. Washer, 9/16 inch
4. Locknut, 3/8 inch
5. Upper hole
6. Throttle cable
7. Handle

Installing the Lanyard Adjustment Bolts

1. For the adjustment bolt, install the nut (5/16 inch), small washer, spacer and bolt (5/16 x 1–1/4 inch) into the center hole (Fig. 10).

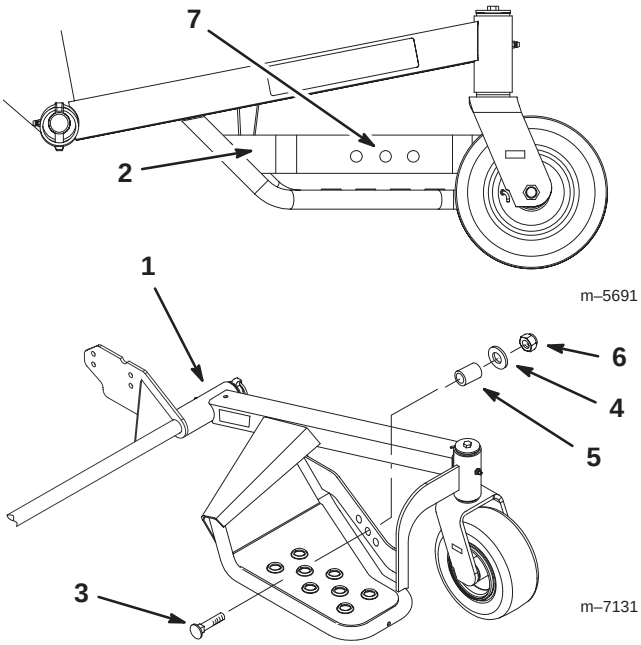

Figure 10

1. Sulky assembly
2. Side support
3. Carriage bolt, 5/16 x 1–1/4 inch
4. Small washer
5. Spacer
6. Locknut, 5/16 inch
7. Center hole

Note: The sulky transport position can be raised or lowered. Refer to Adjusting the Sulky Transport Position on page 8.

2. Install the other lanyard on the opposite side.

Installing the Weight Kit

A weight kit (Part number 107–4100) is needed for 36 and 48 inch mowers. The 36 inch mower requires 2 weight kits. The weight kit is available through an Authorized Service Dealer.

Refer to the Weight Kit for the correct procedures to install the weight.

Removing the Weight

Important If the sulky and axle are removed from the machine, remove any weights for use with the sulky.

Adjusting the Parking Brake

Installing the Tru Track® sulky requires that the machine's parking brake be adjusted to compensate for the increased unit weight.

Refer to the Mid–size mower *Operator's Manual* for the correct procedure to adjust the parking brake.

Operation

Operating Tips

- Drive slowly and take time to learn how the sulky moves when using it for the first time.
- Use care when turning to ensure that you do not swing yourself and the sulky into obstacles.
- When turning, lean forward and toward the direction of the turn to help in keeping your balance.
- If your machine is a gear drive, pistol grip machine, you may need to adjust the wheel drive tension; refer to your machine *Operator's Manual*.

Positioning the Sulky for Transport

Before placing the machine on a trailer, lift each sulky assembly up and secure them with the lanyards (Fig. 11). This will keep the sulky from bouncing during transport and make the machine more compact.

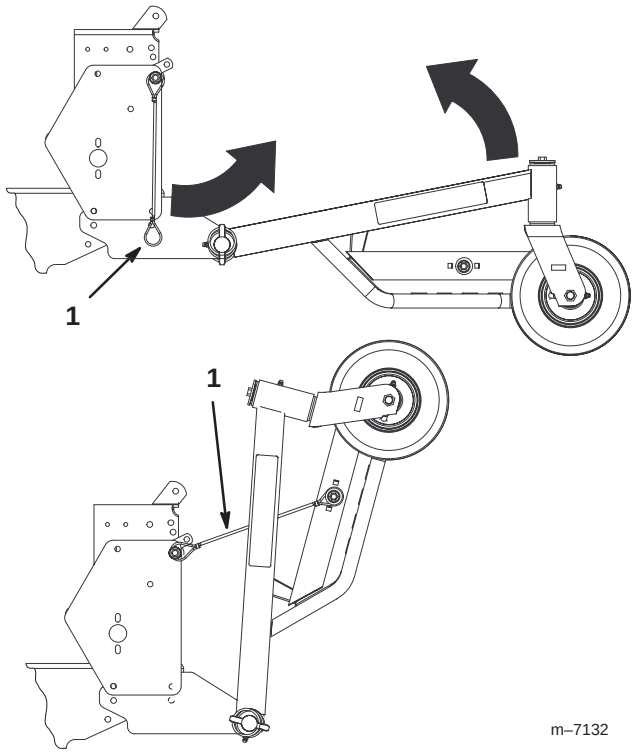

Figure 11

1. Lanyard

Maintenance

Recommended Maintenance Schedule

Maintenance Service Interval	Maintenance Procedure
8 hours	• Check the tire pressure.
25 hours	• Grease all fittings.
Storage Service	• Grease all fittings. • Check the tire pressure. • Paint chipped surfaces.

Checking the Tire Pressure

Ensure that the caster wheel tires are filled with air to 50 psi (345 kPa) every 8 operating hours or before each use.

Greasing the Sulky

Grease all grease fittings every 25 operating hours and immediately after every washing.

Grease Type: General-purpose grease.

1. Clean the grease fittings with a rag.
2. Connect a grease gun to each fitting (Fig 12).

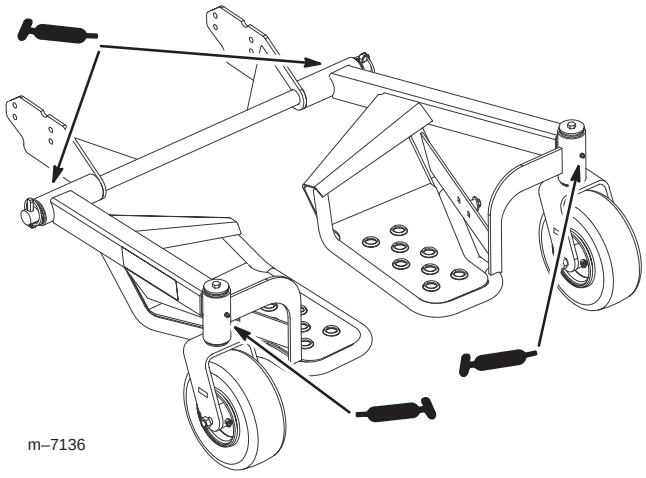

Figure 12

3. Pump grease into the fittings until grease begins to ooze out of the bearings.
4. Wipe up any excess grease.

Adjusting the Sulky Transport Position

The sulky transport position can be raised or lowered by using the three different holes in the sulky side support (Fig. 13).

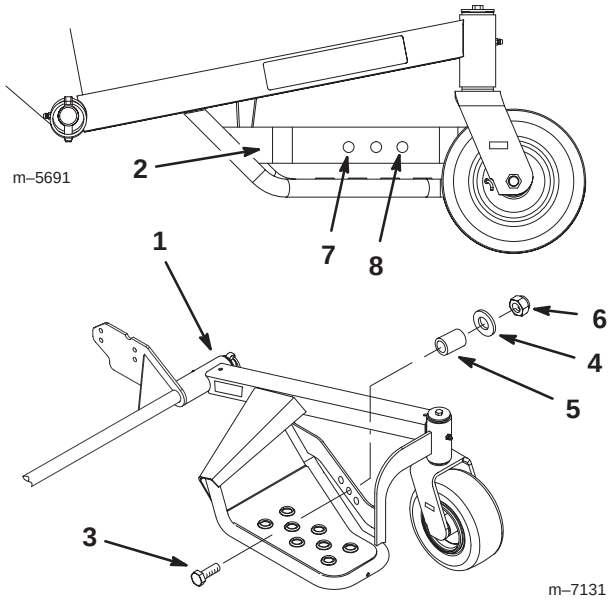

Figure 13

1. Sulky assembly
2. Side support
3. Bolt, 5/16 x 1–1/4 inch
4. Small washer
5. Spacer
6. Locknut, 5/16 inch
7. Lowers the sulky position
8. Raises the sulky position

1. Remove the nut (5/16 inch), small washer, spacer, lanyard and bolt (5/16 x 1-1/4 inch) from the sulky side support (Fig. 13).
2. Select different hole in the sulky side support (Fig. 13).
3. Install the nut (5/16 inch), small washer, spacer, lanyard and bolt (5/16 x 1–1/4 inch) into the desired hole (Fig. 13).