Form No. 3484-367 Rev A

Count on it.

Operator's Manual

GreensPro® e1700 Greens Roller

Model No. 44914—Serial No. 422000000 and Up

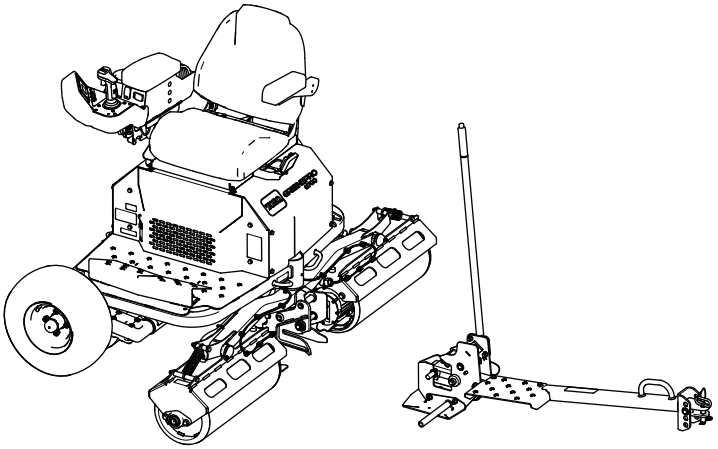

Register at www.Toro.com.
Original Instructions (EN)

3484-367

This product complies with all relevant European directives; for details, please see the separate product specific Declaration of Conformity (DOC) sheet.

If this machine is equipped with a telematics device, refer to your authorized Toro distributor for instructions to activate the device

⚠ WARNING

CALIFORNIA
Proposition 65 Warning

The power cord on this product contains lead, a chemical known to the State of California to cause birth defects or other reproductive harm. Wash hands after handling.

Battery posts, terminals, and related accessories contain lead and lead compounds, chemicals known to the State of California to cause cancer and reproductive harm. Wash hands after handling.

Use of this product may cause exposure to chemicals known to the State of California to cause cancer, birth defects, or other reproductive harm.

Introduction

This machine is a ride-on greens roller intended for use by professional, hired operators in commercial applications. It is primarily designed for rolling greens, tennis courts, and other fine turf surfaces in parks, golf courses, sports fields, and on commercial grounds. Using this product for purposes other than its intended use could prove dangerous to you and bystanders.

Read this information carefully to learn how to operate and maintain your product properly and to avoid injury and product damage. You are responsible for operating the product properly and safely.

Visit www.Toro.com for product safety and operation training materials, accessory information, help finding a dealer, or to register your product.

Whenever you need service, genuine Toro parts, or additional information, contact an Authorized Service Dealer or Toro Customer Service and have the model and serial numbers of your product ready. Figure 1 identifies the location of the model and serial numbers on the product. Write the numbers in the space provided.

Important: **With your mobile device, you can scan the QR code on the serial number decal (if equipped) to access warranty, parts, and other product information.**

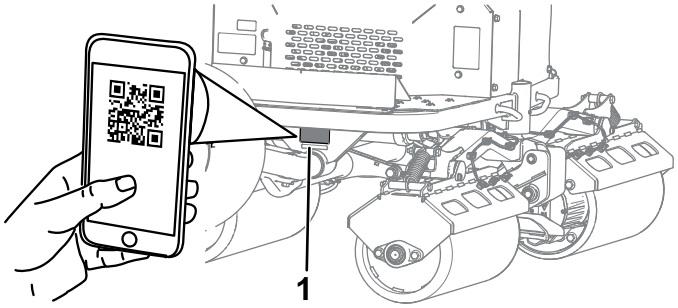

g574294

Figure 1

1. Location of the model and serial numbers

Model No. _____

Serial No. _____

Safety-Alert Symbol

The safety-alert symbol (Figure 2) shown in this manual and on the machine identifies important safety messages that you must follow to prevent accidents.

g000502

Figure 2
Safety-alert symbol

The safety-alert symbol appears above information that alerts you to unsafe actions or situations and is followed by the word **DANGER**, **WARNING**, or **CAUTION**.

DANGER indicates an imminently hazardous situation which, if not avoided, **will** result in death or serious injury.

WARNING indicates a potentially hazardous situation which, if not avoided, **could** result in death or serious injury.

CAUTION indicates a potentially hazardous situation which, if not avoided, **may** result in minor or moderate injury.

This manual uses two other words to highlight information. **Important** calls attention to special

© 2026—The Toro® Company
8111 Lyndale Avenue South
Bloomington, MN 55420

Contact us at www.Toro.com.
Printed in the USA
All Rights Reserved

mechanical information and **Note** emphasizes general information worthy of special attention.

Contents

Safety-Alert Symbol 2
Safety 4
General Machine Safety Warnings 4
Additional Safety Messages 6
Safety and Instructional Decals 8
Setup 13
1 Assembling the Drawbar 14
2 Installing the Seat Back to the Machine 15
3 Adjusting the Console Position 16
4 Installing the Arm Pad 17
5 Stowing the Power Cord in the Console Compartment 17
6 Turning On the Battery-Disconnect Switch 18
7 Installing the Drawbar to the Towing Vehicle 18
8 Charging the Batteries 18
9 Adjusting the Machine Settings 19
Product Overview 19
Controls 19
Specifications 21
Attachments/Accessories 22
Before Operation 22
Understanding the Display-Screen Information 22
Adjusting the Console Position 26
Adjusting the Footrest Position 26
Adjusting the Work Light Positions 26
Checking the Interlocks 27
During Operation 27
Starting the Machine 27
Shutting Off the Machine 27
Operating the Machine 27
Operating the Joystick 28
Using the Automated-Offset Button 29
Using the Inch-Mode Function 29
Cleaning the Rollers 29
Monitoring the Battery-System Charge Level 30
After Operation 30
Transporting the Machine 30
Moving a Non-Functioning Machine 33
Understanding the Lithium-Ion Battery Charger 34
Maintenance 37
Recommended Maintenance Schedule(s) 37
Pre-Maintenance Procedures 38
Lubrication 38
Greasing the Drive-Roller Bearings and Lift Actuator 38
Electrical System Maintenance 39
Using the Battery-Disconnect Switch 39
Servicing the Batteries 39
Maintaining the Lithium-Ion Batteries 39
Locating the Fuses 40
Drive System Maintenance 41
Checking the Transport Wheels Tire Pressure 41
Checking the Wheel Lug Nuts 41
Changing the Roller Motor Oil 41
Storage 45
Cleaning and Storage 45
Battery Storage Requirements 45
Troubleshooting 47

Safety

General Machine Safety Warnings

WARNING—Read all safety warnings, instructions, illustrations and specifications provided with this machine.

Failure to follow the warnings and instructions may result in electric shock, fire and/or serious injury.

The term "machine" in all of the warnings listed below refers to your mains-operated (corded) machine or battery-operated (cordless) machine.

1. **Work area safety**
   - A. **Keep work area clean and well lit.** *Cluttered or dark areas invite accidents.*
   - B. **Do not operate the machine in explosive atmospheres, such as in the presence of flammable liquids, gasses, or dust.**
   - C. **Keep children and bystanders away while operating the machine.** *Distractions can cause you to lose control.*
2. **Electrical safety**
   - A. **Machine plugs must match the outlet. Never modify the plug in any way. Do not use any adapter plugs with an earthed (grounded) machine.** *Unmodified plugs and matching outlets will reduce risk of electric shock.*
   - B. **Avoid body contact with earthed or grounded surfaces, such as pipes, radiators, ranges, and refrigerators.** *There is an increased risk of electric shock if your body is earthed or grounded.*
   - C. **Do not expose the machine to rain or wet conditions.** *Water entering a machine will increase the risk of electric shock.*
   - D. **Do not abuse the cord. Never use the cord for carrying, pulling or unplugging the machine. Keep cord away from heat, oil, sharp edges, or moving parts.** *Damaged or entangled cords increase the risk of electric shock.*
   - E. **When operating the machine outdoors, use an extension cord suitable for outdoor use.** *Use of a cord suitable for outdoor use reduces the risk of electric shock.*
   - F. **If operating the machine in a damp location is unavoidable, use a residual current device (RCD) protected supply.** *Use of an RCD reduces the risk of electric shock.*
3. **Personal safety**
   - A. **Stay alert, watch what you are doing, and use common sense when operating the machine. Do not use the machine while you are tired or under the influence of drugs, alcohol, or medication.** *A moment of inattention while operating the machine may result in serious personal injury.*
   - B. **Use personal protective equipment. Always wear eye protection.** *Protective equipment such as a dust mask, non-skid safety shoes, or hearing protection used for appropriate conditions will reduce personal injuries.*
   - C. **Prevent unintentional starting. Ensure the switch is in the off-position before connecting to power source and/or battery pack.** *Energising a machine that has the switch on invites accidents.*
   - D. **Remove any adjusting key or wrench before turning the machine on.** *A wrench or a key left attached to a rotating part of the machine may result in personal injury.*
   - E. **Do not overreach. Keep proper footing and balance at all times.** *This enables better control of the machine in unexpected situations.*
   - F. **Dress properly. Do not wear loose clothing or jewelry. Keep your hair and clothing away from moving parts.** *Loose clothes, jewelry or long hair can be caught in moving parts.*
   - G. **If devices are provided for the connection of dust extraction and collection facilities, ensure these are connected and properly used.** *Use of dust collection can reduce dust-related hazards.*
   - H. **Do not let familiarity gained from frequent use of the machine allow you to become complacent and ignore machine safety principles.** *A careless action can cause severe injury within a fraction of a second.*
4. **Machine use and care**
   - A. **Do not force the machine. Use the correct machine for your application.** *The correct machine will do the job better and safer at the rate for which it was designed.*

B. **Do not use the machine if the switch does not turn it on and off.** *Any machine that cannot be controlled with the switch is dangerous and must be repaired.*

C. **Disconnect the plug from the power source and/or remove the battery pack, if detachable, from the machine before making any adjustments, changing accessories, or storing the machine.** *Such preventive safety measures reduce the risk of starting the machine accidentally.*

D. **Store an idle machine out of the reach of children and do not allow persons unfamiliar with the machine or these instructions to operate the machine.** *A machine is dangerous in the hands of untrained users.*

E. **Maintain the machine and accessories. Check for misalignment or binding of moving parts, breakage of parts and any other condition that may affect the operation of the machine. If damaged, have the machine repaired before use.** *Many accidents are caused by a poorly maintained machine.*

F. **Use the machine, accessories, and tool bits etc., in accordance with these instructions, taking into account the working conditions and the work to be performed.** *Use of the machine for operations different from those intended could result in a hazardous situation.*

G. **Keep handles and grasping surfaces dry, clean and free from oil and grease.** *Slippery handles and grasping surfaces do not allow for safe handling and control of the machine in unexpected situations.*

5. **Battery machine use and care**

A. **Recharge only with the charger specified by a manufacturer.** *A charger that is suitable for one type of battery pack may create a risk of fire when used with another battery pack.*

B. **Use the machine only with specifically designated batteries.** *Use of any other batteries may create a risk of injury and fire.*

C. **Do not use a battery pack or machine that is damaged or modified.** *Damaged or modified batteries may exhibit unpredictable behavior resulting in fire, explosion or risk or injury.*

D. **Do not expose a battery pack or machine to fire or excessive temperature.** *Exposure to fire temperature above 130°C may cause an explosion.*

E. **Follow all charging instructions and do not charge the battery pack or machine outside the temperature range specified in the instructions.** *Changing improperly or at temperatures outside the specified range may damage the battery and increase the risk of fire.*

6. **Service**

A. **Have your machine serviced by a qualified repair person using only identical replacement parts.** *This will ensure that the safety of the machine is maintained.*

B. **Never service damaged battery packs.** *Service of battery packs should be performed only by the manufacturer or authorized service providers.*

Additional Safety Messages

General Safety

This product is capable of causing personal injury. Always follow all safety instructions to avoid serious personal injury.

- Read and understand the contents of this *Operator's Manual* before starting the machine.
- Use your full attention while operating the machine. Do not engage in any activity that causes distractions; otherwise, injury or property damage may occur.
- Do not put your hands or feet near moving components of the machine.
- Do not operate the machine without all guards and other safety protective devices in place and working on the machine.
- Ensure that the parking brake is engaged, shut off the machine, remove the key, and wait for all movement to stop before you leave the operator's position. Allow the machine to cool before adjusting, servicing, cleaning, or storing it.

Operation Safety

- Park the machine on level ground, ensure that the parking brake is engaged, shut off the machine, remove the key (if equipped), and wait for all movement to stop before you leave the operator's position. Allow the machine to cool before adjusting, servicing, cleaning, or storing it.
- Never allow children or untrained people to operate or service the machine. Local regulations may restrict the age of the operator. The owner is responsible for training all operators and mechanics.
- Become familiar with the safe operation of the equipment, operator controls, and safety signs.
- Know how to stop the machine quickly.
- Check that operator-presence controls, safety switches, and shields are attached and functioning properly. Do not operate the machine unless they are functioning properly.
- Before operating, always inspect the machine to ensure that the components and fasteners are in good working condition. Replace worn or damaged components and fasteners.
- Inspect the area where you will use the machine and remove all objects that the machine could throw.
- The owner/operator can prevent and is responsible for accidents that may cause personal injury or property damage.
- Wear appropriate clothing, including eye protection; long pants; and substantial, slip-resistant footwear. Tie back long hair and do not wear loose clothing or loose jewelry.
- Do not operate the machine while ill, tired, or under the influence of alcohol or drugs.
- Use your full attention while operating the machine. Do not engage in any activity that causes distractions; otherwise, injury or property damage may occur.
- Keep bystanders and pets out of the operating area.
- Never carry passengers on the machine.
- Operate the machine only in good visibility to avoid holes or hidden hazards.
- Avoid operating on wet grass. Reduced traction could cause the machine to slide.
- Before you start the machine, ensure that all drives are in neutral and you are in the operating position.
- Look behind and down before backing up to be sure of a clear path.
- Use care when approaching blind corners, shrubs, trees, or other objects that may obscure your vision.
- Do not operate near drop-offs, ditches, or embankments. The machine could suddenly roll over if an edge gives way.
- Stop the machine, shut off the power, and inspect the attachment after striking an object or if there is an abnormal vibration in the machine. Make all necessary repairs before resuming operation.
- Slow down and use caution when making turns and crossing roads and sidewalks with the machine. Always yield the right-of-way.
- Never leave a running machine unattended.
- Do not operate the machine when there is the risk of lightning.
- Do not use the machine as a towing vehicle.
- Use accessories, attachments, and replacement parts approved by The Toro® Company only.
- Keep hands and feet away from the rollers.
- Use care when connecting and disconnecting the machine to and from the tow vehicle.
- Use full-width ramps for loading the machine into a trailer or truck.
- The seat switch needs to be activated in order for the traction system to be activated.
- Clean grass and debris from the machine to help prevent fires.

- Allow the machine to cool before storing the machine in any enclosure.
- Turn the battery-disconnect switch to the OFF position before storing or transporting the machine.
- Never store the machine where there is an open flame, spark, or pilot light, such as on a water heater or on other appliances.
- Keep all parts of the machine in good working condition and all hardware tightened.
- Replace all worn, damaged, or missing decals.

Slope Safety

- Establish your own procedures and rules for operating on slopes. These procedures must include surveying the site to determine which slopes are safe for machine operation. Always use common sense and good judgment when performing this survey.
- Slopes are a major factor related to loss of control and rollover accidents, which can result in severe injury or death. You are responsible for safe slope operation. Operating the machine on any slope requires extra caution.
- Operate the machine at a lower speed when you are on a slope.
- If you feel uneasy operating the machine on a slope, do not do it.
- Watch for holes, ruts, bumps, rocks, or other hidden objects. Uneven terrain could overturn the machine. Tall grass can hide obstacles.
- Choose a low ground speed so that you do not need to stop or shift while on a slope.
- A rollover can occur if the rollers lose traction.
- Avoid operating the machine on wet grass. Rollers may lose traction, regardless of whether the brakes are available and functioning.
- Avoid starting, stopping, or turning the machine on a slope.
- Keep all movement on slopes slow and gradual. Do not suddenly change the speed or direction of the machine.

Battery and Charger Safety

General

WARNING: Risk of fire and electric shock—The batteries have no user-serviceable parts.

- Confirm the voltage that is available in your country before using the charger.
- Do not charge the machine in a wet environment; keep it protected from rain and snow.
- A risk of fire, electric shock, or injury may result from using an accessory not recommended or sold by Toro.
- To reduce risk of a battery explosion, follow these instructions and the instructions for any equipment that you intend to use near the charger.
- Batteries could emit explosive gasses if they are significantly overcharged.
- Refer to an authorized Toro distributor to service or replace a battery.

Training

- Never allow children or untrained people to operate or service the charger. Local regulations may restrict the age of the operator. The owner is responsible for training all operators and mechanics.
- Read, understand, and follow all instructions on the charger and in the manual before operating the charger. Be familiar with the proper use of the charger.

Preparation

- Keep bystanders and children away while charging.
- Shut off the machine and wait until the machine has completely powered down before charging. Failure to do this may cause arcing.
- Use the charger only within the voltage range specified in this *Operator's Manual*, and use only a power cord approved by Toro.
- Contact your authorized Toro distributor for the proper charger and power cord.

Operation

- Do not charge a frozen battery.
- Do not abuse the cord. Do not pull on the power supply cord to disconnect the charger from the receptacle. Store the cord away from heat, oil, and sharp edges.
- Connect the charger directly to a grounding receptacle. Do not use the charger on an ungrounded outlet, even with a grounding adapter.
- Do not alter the provided power cord or plug.
- Remove metal items such as rings, bracelets, necklaces, and watches when working with a lithium-ion battery. A lithium-ion battery can produce enough current to cause a severe burn.
- Use an extension cord that can handle the charging amperage specified in this *Operator's Manual*. If you are charging outdoors, use an extension cord rated for outdoor use.

- If the power supply cord is damaged while it is plugged in, disconnect the cord from the wall receptacle and contact an authorized Toro distributor for a replacement.
- Unplug the charger from the electrical outlet when not in use, before moving it to another location, or prior to servicing it.

Maintenance and Storage

- Do not disassemble the charger.
- Take the charger to an authorized Toro distributor when service or repair is required.
- Unplug the power cord from the outlet before starting any maintenance or cleaning to reduce risk of electric shock.
- Maintain or replace safety and instruction labels as needed.
- Do not operate the charger with a damaged cord or plug. Contact an authorized Toro distributor to obtain a replacement cord.
- If the charger is damaged, do not use it; take it to an authorized Toro distributor.

Maintenance Safety

- Before you leave the operator's position, do the following:
  - Ensure that the parking brake is engaged.
  - Park the machine on a level surface.
  - Shut off the machine and remove the key.
  - Wait for all movement to stop.
- Allow machine components to cool before performing maintenance.
- Only allow a qualified repair person to service the machine.
- If possible, do not perform maintenance while the machine is running. Keep away from moving parts.
- Support the machine with jack stands whenever you work under the machine.
- Carefully release pressure from components with stored energy.
- Keep all parts of the machine in good working condition and all hardware tightened.
- Replace all worn or damaged decals.
- To ensure safe, optimal performance of the machine, use only genuine Toro replacement parts. Replacement parts made by other manufacturers could be dangerous.

Storage Safety

- Ensure that the parking brake is engaged, shut off the machine, remove the key, and wait for all movement to stop before you leave the operator's position. Allow the machine to cool before adjusting, servicing, cleaning, or storing it.
- Never store the machine where there is an open flame, spark, or pilot light.

Safety and Instructional Decals

Safety decals and instructions are easily visible to the operator and are located near any area of potential danger. Replace any decal that is damaged or missing.

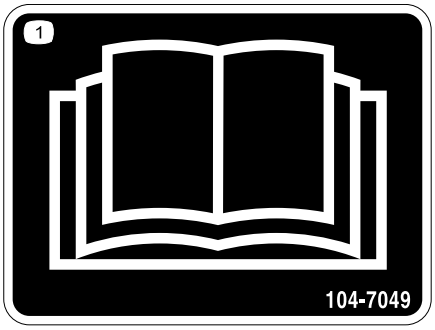

decal104-7049

104-7049

1. Read the *Operator's Manual*.

decal119-6807

119-6807

1. Warning—no step

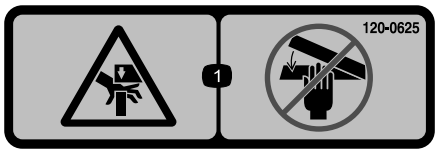

decal120-0625

120-0625

1. Pinch point, hand—keep hands away.

---

decal133-8061

133-8061

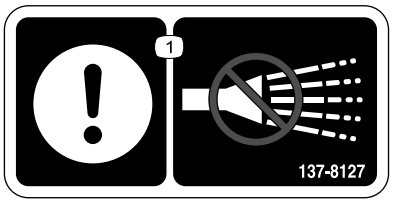

decal137-8127

137-8127

1. Attention—do not spray with high-pressure water.

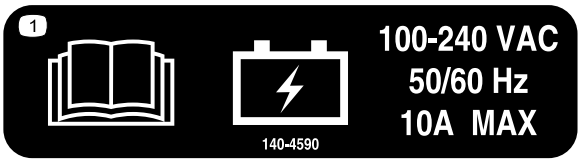

decal140-4590

140-4590

1. Read the *Operator's Manual* for battery information.

---

decal144-0275

144-0275

1. Batteries are flammable

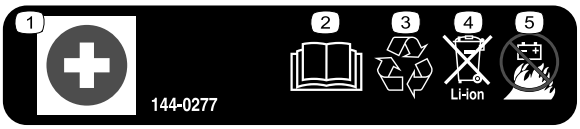

decal144-0277

144-0277

1. Positive terminal
2. Read the *Operator's Manual*.
3. Recycle the battery.
4. Do not dispose improperly.
5. Do not expose to fire.

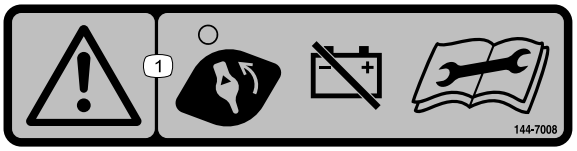

decal144-7008

144-7008

1. Warning—turn the battery-disconnect switch to the OFF position before performing maintenance.

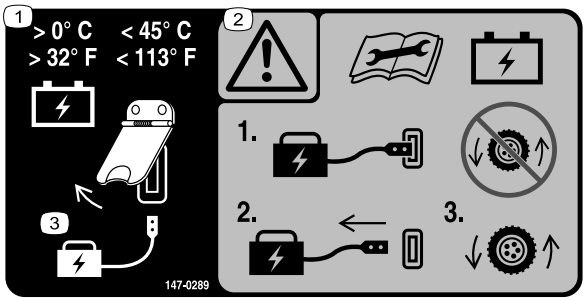

decal147-0289

147-0289

1. Charge the battery at a temperature above 0°C (32°F) and below 45°C (113°F)
2. Warning—read the *Operator's Manual* before performing battery maintenance; do not operate the machine when the battery charger is connected; disconnect the battery charger before operating the machine.
3. Lift the cover to charge the battery.

---

decal147-0290

147-0290

1. Warning—light is bright; do not look directly into the light.

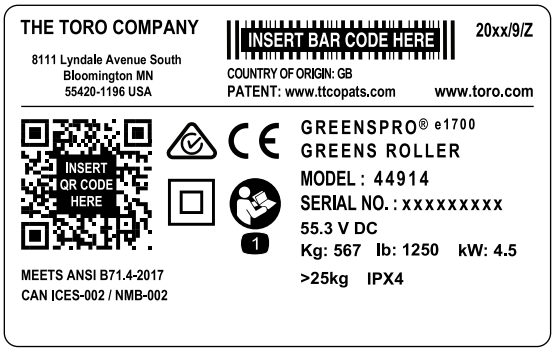

decal161-9147

161-9147

1. Read the *Operator's Manual*.

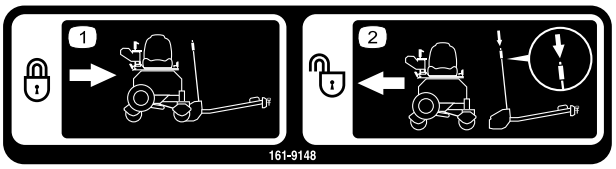

decal161-9148

161-9148

1. Drive the machine onto the drawbar to engage the drawbar lock.
2. Press the button on the latch handle to disengage the drawbar lock.

decal161-9152

161-9152

1. Warning—read the *Operator's Manual*; all operators should be trained before operating the machine.
2. Warning—keep bystanders away from the machine.
3. Warning—stay away from moving parts; keep all guards and shields in place.
4. Warning—no passengers allowed in the machine operator's seat when towing.
5. Tipping hazard—do not use the machine near drop-offs or water, stay away from embankments or drop-offs.

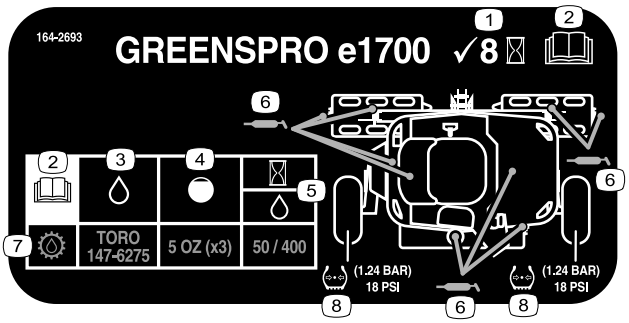

decal164-2693

164-2693

1. Check every 8 hours
2. Read the *Operator's Manual*.
3. Fluid specification
4. Capacity
5. Fluid change interval (hours)
6. Grease point
7. Gearbox fluid
8. Tire pressure

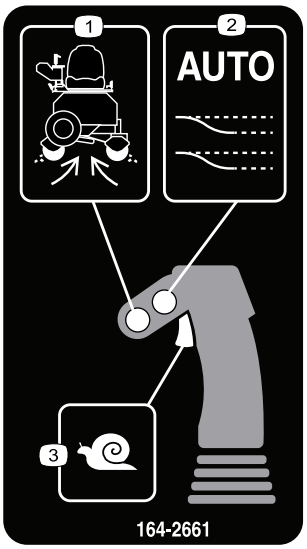

decal164-2661

164-2661

1. Roller clean
2. Automated offset
3. Inch mode

---

decal145-5301

145-5301

1. Negative battery terminal

---

decal145-5338

145-5338

1. Warning—read the *Operator's Manual*.
2. Warning—do not open the battery; do not use a damaged battery.
3. Explosion hazard—do not expose to sparks or open flame.
4. Electric shock hazard—do not perform maintenance on the battery.
5. Electric shock hazard

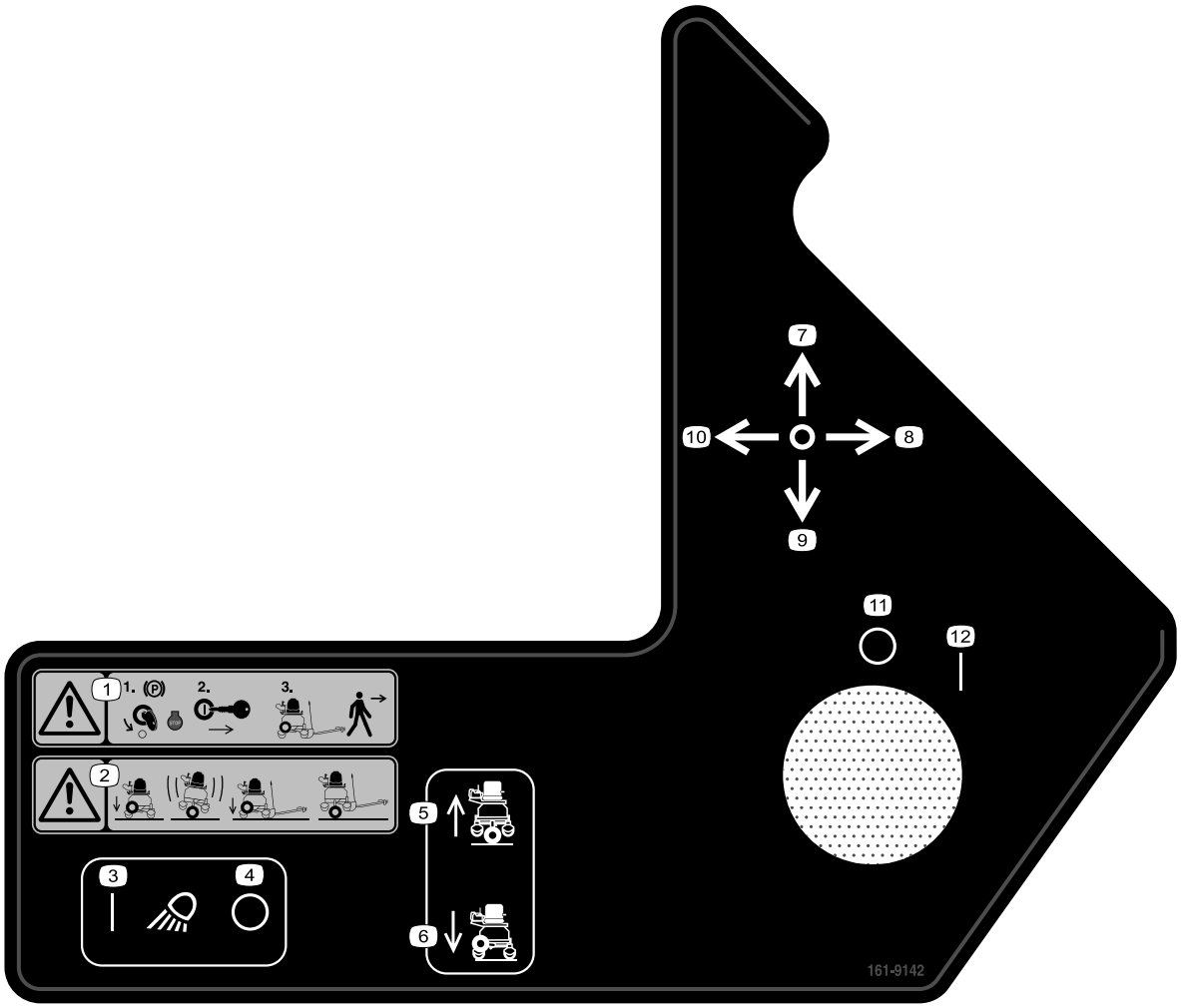

decal161-9142

161-9142

1. Warning—ensure the parking brake is engaged, turn the key to the OFF position, shut off the machine, and remove the key before leaving the machine.
2. Warning—do not lower the transport wheels when the drawbar is not connected; only lower the transport wheels when the drawbar is connected to the transport vehicle.
3. Work lights—on
4. Work lights—off
5. Lower the transport wheels.
6. Raise the transport wheels.
7. Steer forward
8. Right
9. Steer rearward
10. Left
11. Off
12. On

Setup

Loose Parts

Use the chart below to verify that all parts have been shipped.

Procedure	Description	Qty.	Use
1	Drawbar assembly Bolt (M10) Nut	1 2 2	Assemble the drawbar.
2	Seat back Screw (5/16 x 2 inches)	1 4	Install the seat back to the machine.
3	No parts required	–	Adjust the console position.
4	Arm pad Screw (5/16 x 1/4 inch) Washer	1 2 2	Install the arm pad.
5	Power cord	1	Stow the power cord in the console.
6	No parts required	–	Turn on the battery-disconnect switch.
7	No parts required	–	Install the drawbar to the towing vehicle.
8	No parts required	–	Charge the batteries.
9	No parts required	–	Adjust the machine settings.

1

Assembling the Drawbar

Parts needed for this procedure:

1	Drawbar assembly
2	Bolt (M10)
2	Nut

Procedure

1. Remove the cable tie securing the latch handle to the base of the drawbar.

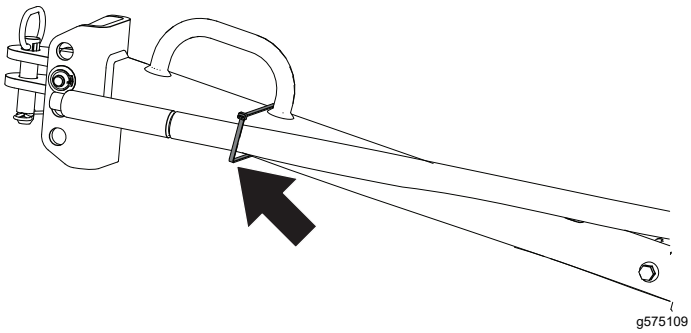

Figure 3

2. Remove and retain the bolt (M10) and nut securing the latch handle to the capture plate.

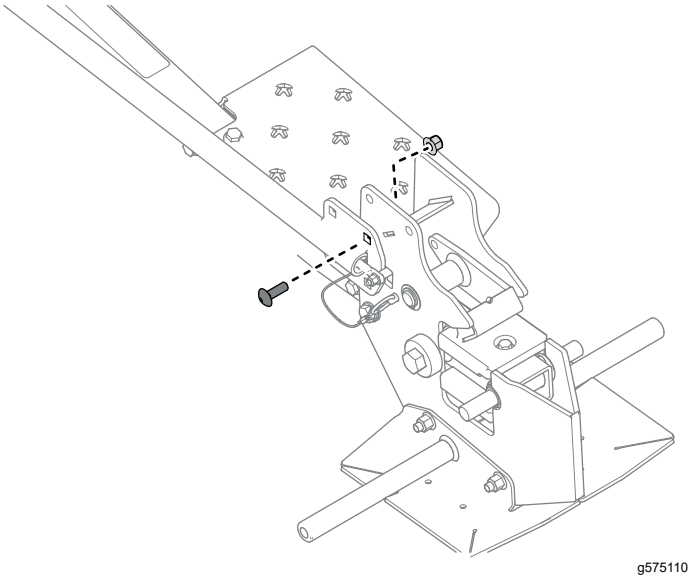

Figure 4

3. Remove the trailer safety pin from the capture plate.

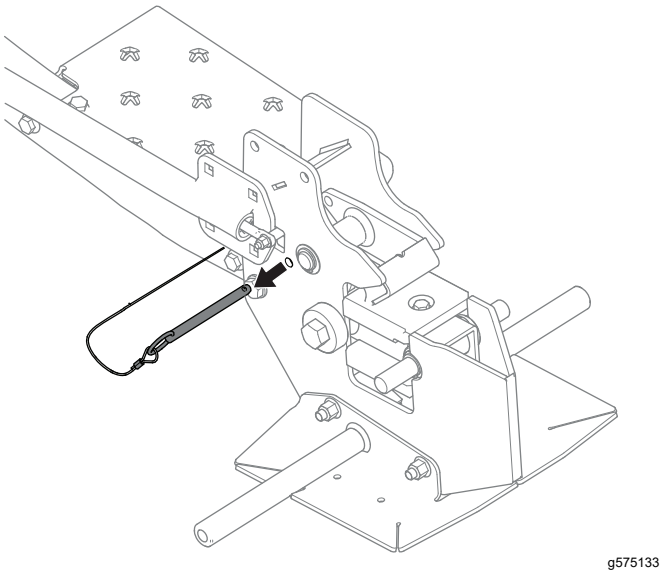

Figure 5

4. Move the handle to the upright position.

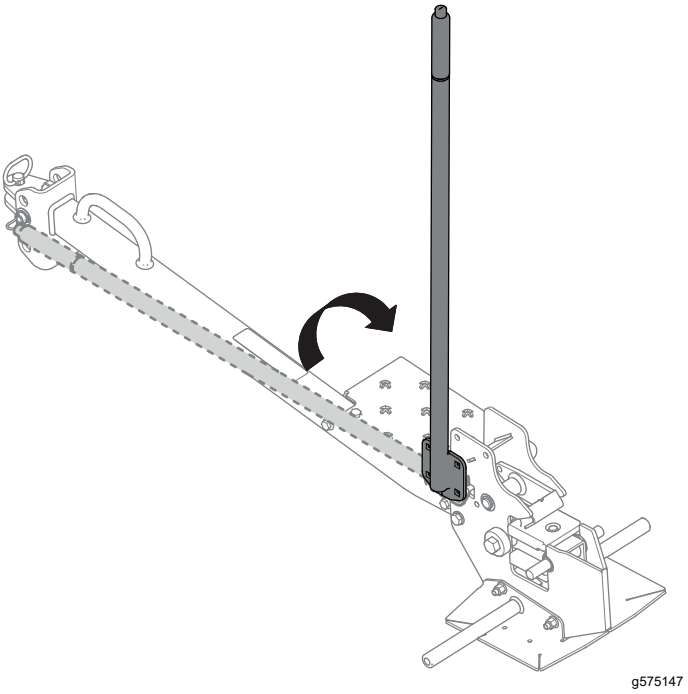

Figure 6

5. Install the loop of the drawbar safety pin lanyard to the capture plate as shown in the following figure.

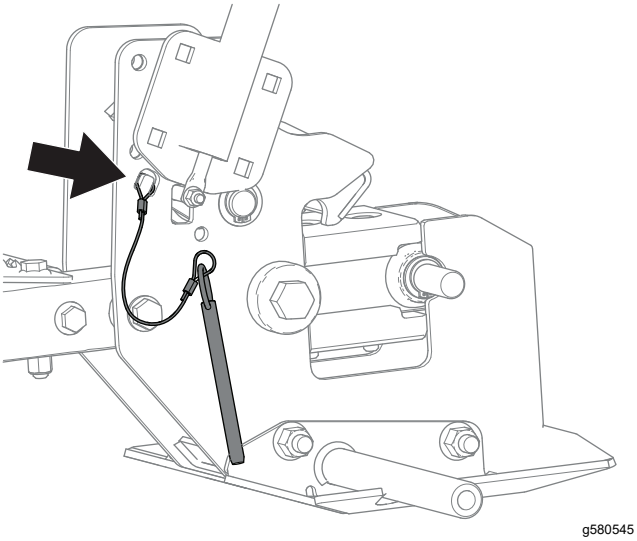

Figure 7

6. Install the 3 bolts (M10) and 3 nuts as shown in the following figure. Torque the fasteners to 46 to 57 N·m (34 to 41 ft-lb).

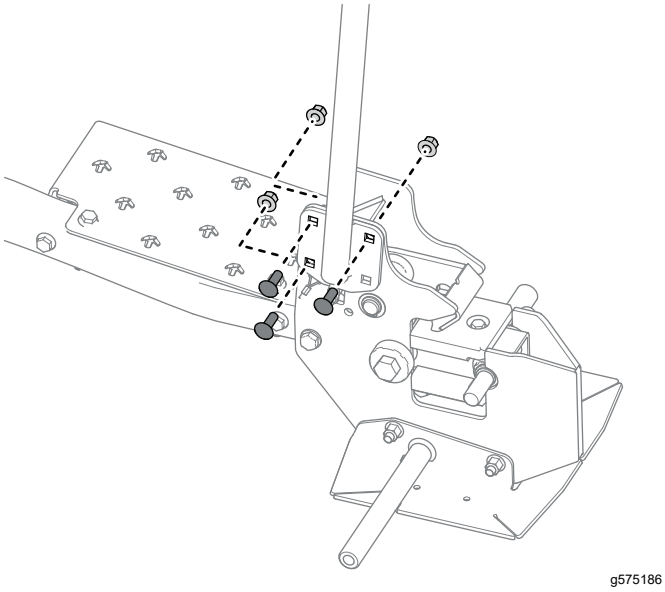

Figure 8

2

Installing the Seat Back to the Machine

Parts needed for this procedure:

1	Seat back
4	Screw (5/16 x 2 inches)

Procedure

Use the 4 screws (5/16 x 2 inches) to secure seat back to the bottom of the seat. Torque the screws to 19.7 N·m (175 in-lb).

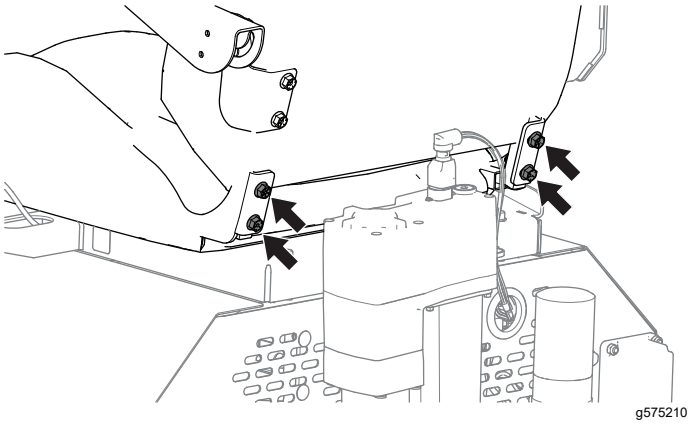

Figure 9

3

Adjusting the Console Position

No Parts Required

Procedure

1. Loosen the 2 screws (M8) on the console pivot plate and rotate the console upwards (Figure 10) until the alignment mark lines up with the harness shield (Figure 11).

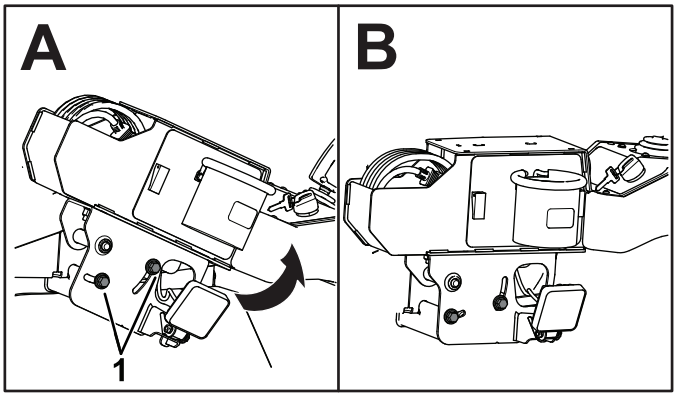

Figure 10

1. Screws

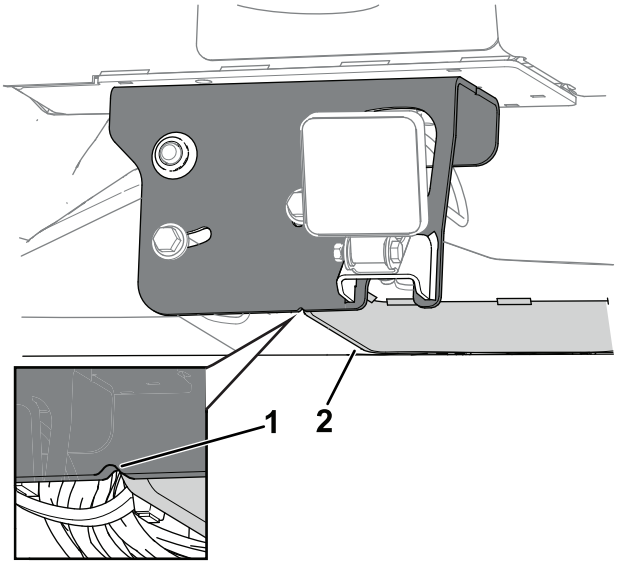

Figure 11

1. Alignment mark
2. Harness shield

2. Tighten the previously loosened 2 screws.

3. Loosen the 2 nuts underneath the console pivot plate and move the pivot plate outwards until it lines up with the alignment mark on the base plate.

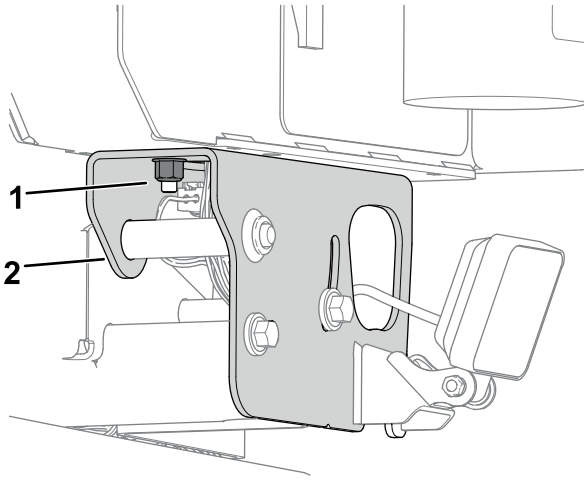

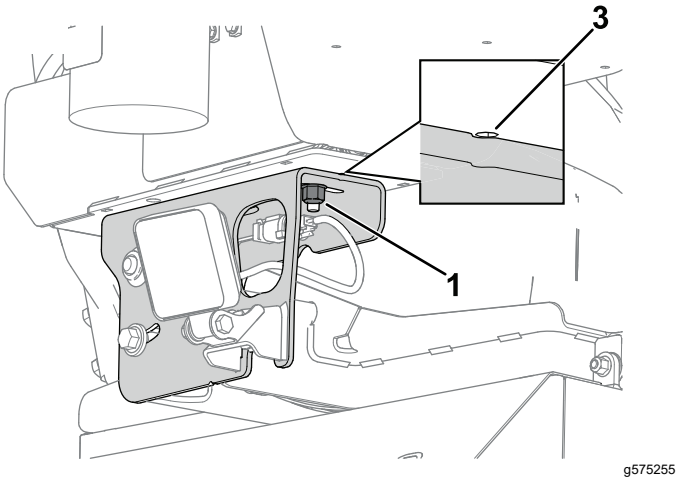

Figure 12

1. Nut
2. Console pivot plate
3. Alignment mark

4. Tighten the previously loosened nuts.

4

Installing the Arm Pad

Parts needed for this procedure:

1	Arm pad
2	Screw (5/16 x 1/4 inch)
2	Washer

Procedure

1. Flip up the 2 latches and remove the side cover.

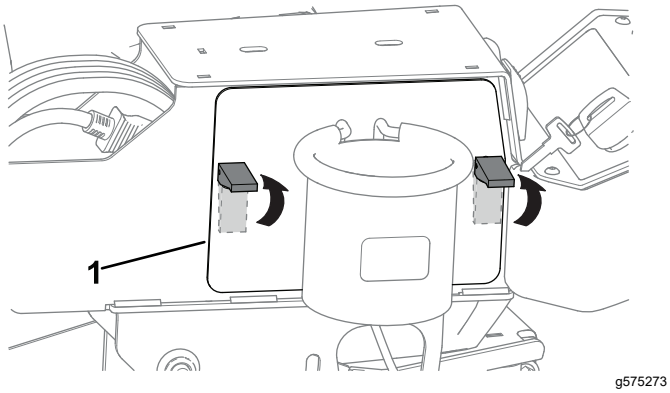

Figure 13

1. Side cover

2. Secure the arm pad to the console using 2 screws (5/16 x 1/4 inch) and 2 washers. Torque the screws to 18 to 22 N·m (162 to 198 in-lb).

   Note: The larger lip of the armrest should be positioned away from the operating position.

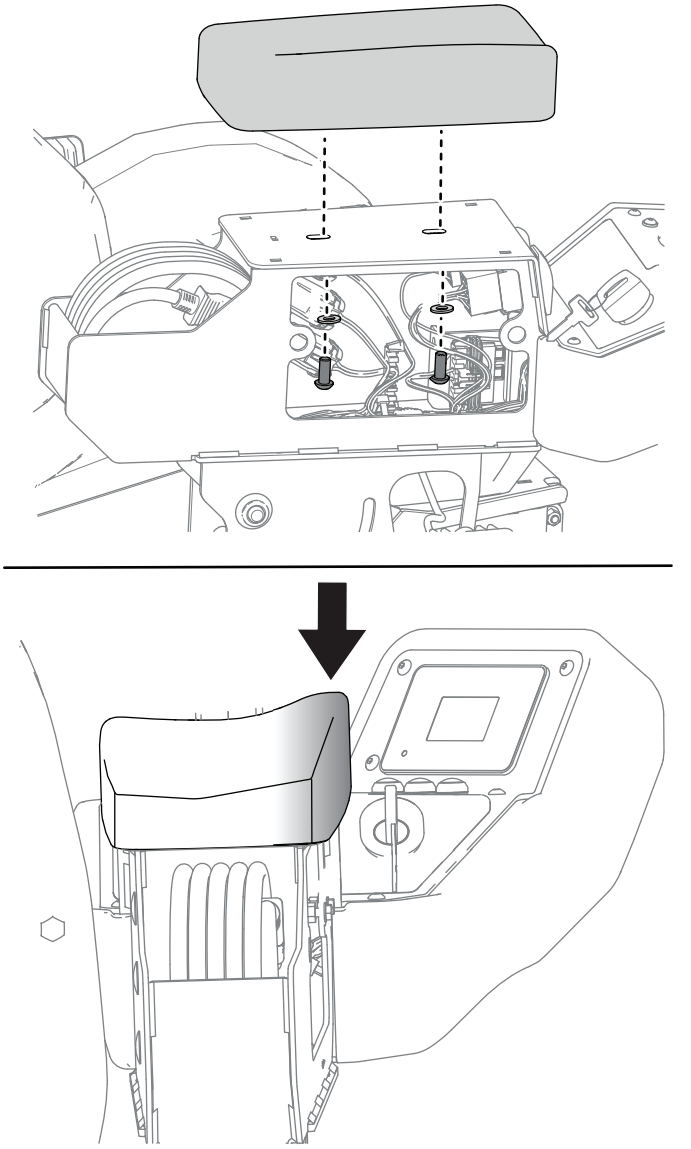

Figure 14

3. Install the side cover.

5

Stowing the Power Cord in the Console Compartment

Parts needed for this procedure:

1	Power cord

Procedure

Stow the power cord in the console compartment as shown in the following figure.

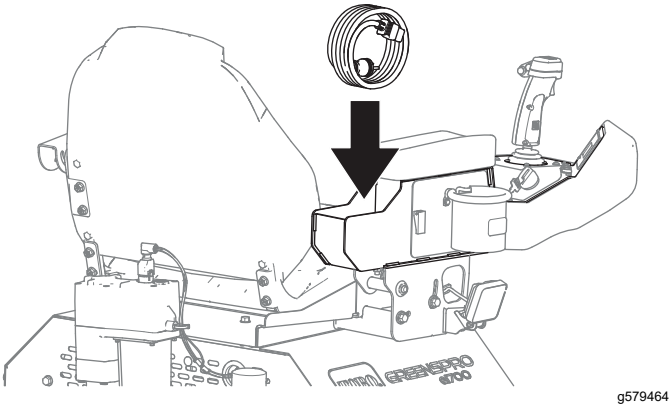

Figure 15

6

Turning On the Battery-Disconnect Switch

No Parts Required

Procedure

1. Remove the cable tie installed on the battery-disconnect switch.

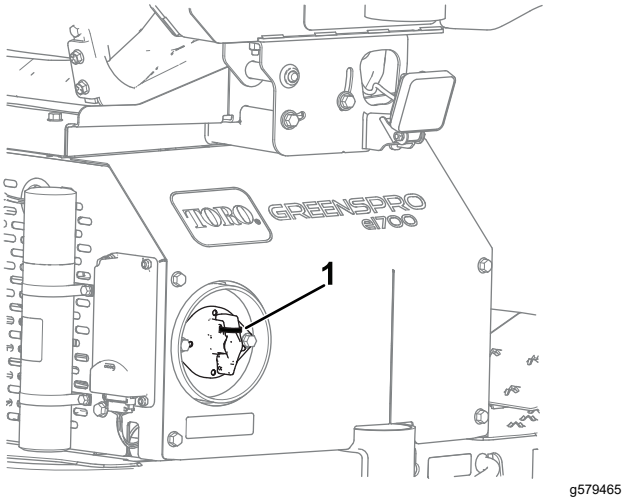

Figure 16

1. Cable tie

2. Turn the battery disconnect switch to the ON position.

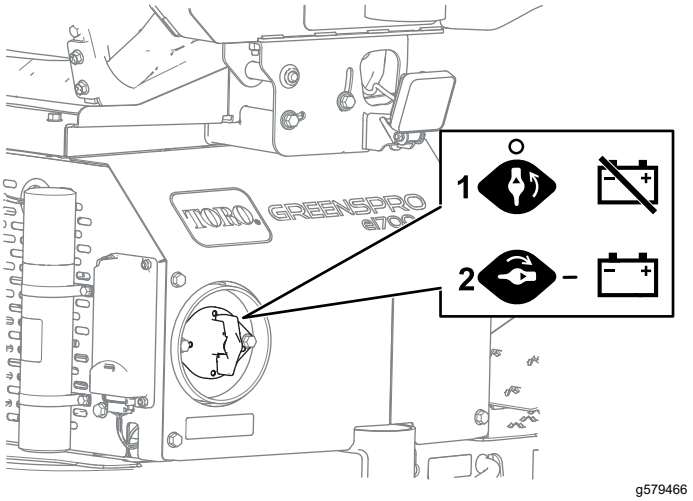

Figure 17

1. Off
2. On

7

Installing the Drawbar to the Towing Vehicle

No Parts Required

Procedure

Install the drawbar to the towing vehicle; refer to Installing the Drawbar to the Towing Vehicle (page 30).

8

Charging the Batteries

No Parts Required

Procedure

Check the battery-system charge; charge it as needed. Refer to Charging the Lithium-Ion Batteries (page 35).

9

Adjusting the Machine Settings

No Parts Required

Procedure

Use the display to adjust the machine settings; refer to Understanding the Display-Screen Information (page 22).

Product Overview

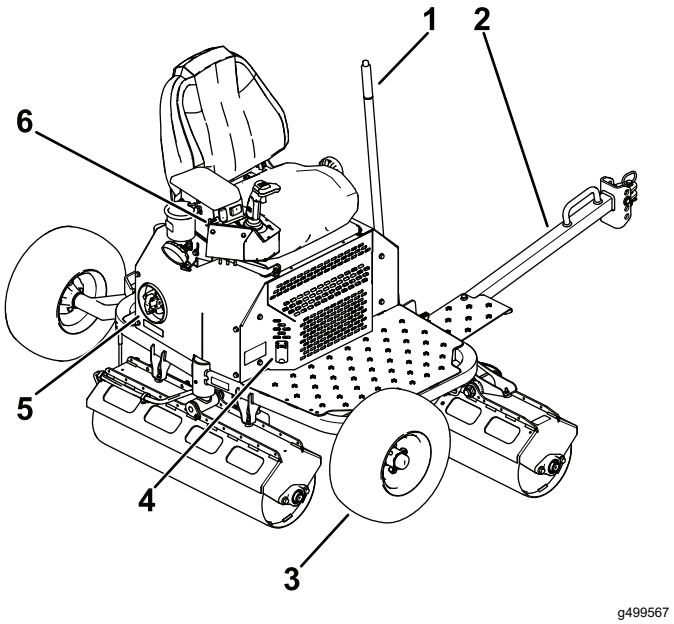

Figure 18

1. Latch handle
2. Drawbar
3. Transport wheels
4. Battery charger port
5. Battery-disconnect switch
6. Control panel

Controls

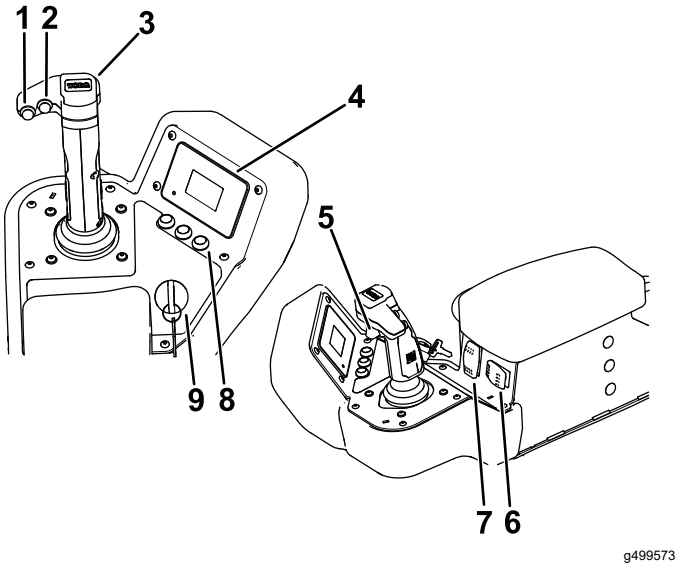

Figure 19

1. Roller-clean button
2. Automated-offset button
3. Joystick
4. Display
5. Inch-mode trigger
6. Light switch
7. Transport-wheel switch
8. Display-screen buttons
9. Key switch

Joystick

Use the joystick to control both the speed and direction of the rollers.

Roller-Clean Button

Press the roller-clean button and move the joystick left or right to clean the rollers.

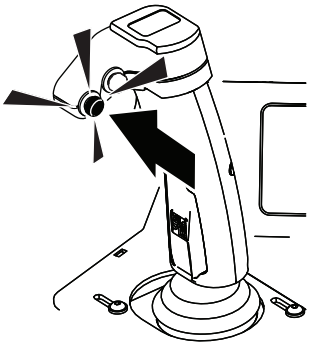

g575832

Figure 20

Automated-Offset Button

Press the automated-offset button while moving the joystick in the desired direction to initiate a pre-programmed steering sequence that repositions the machine near the end of a run.

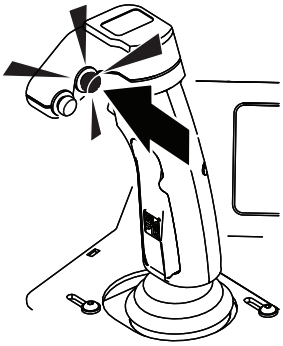

g575831

Figure 21

Inch-Mode Trigger

Press and hold the inch-mode trigger to slowly move the machine in the desired direction.

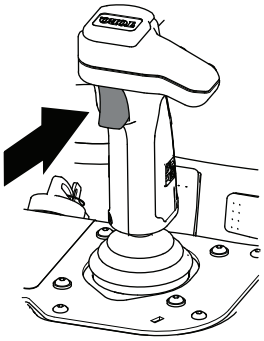

g575834

Figure 22

Key Switch

Use the key switch to power the machine ON or OFF. Turn the key past the ON position to start the machine.

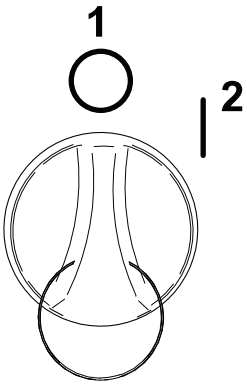

g575843

Figure 23

1. Off
2. On

Transport-Wheel Switch

Use the transport-wheel switch to raise or lower the transport wheels.

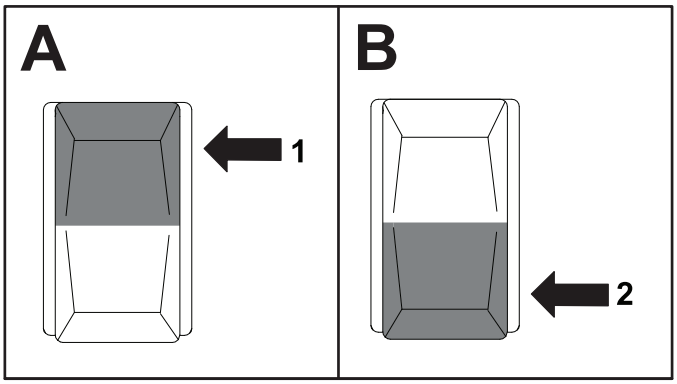

g491902

Figure 24

1. Press and hold to lower the transport wheels.
2. Press and hold to raise the transport wheels.

Light Switch

Use the light switch to turn the lights on and off.

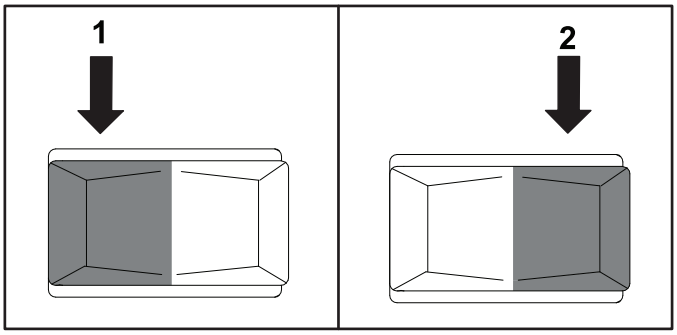

g578915

Figure 25

1. Off position
2. On position

Specifications

Note: Specifications and design are subject to change without notice.

Width (Overall)	188 cm (74 inches)
Width (Rolling)	175 cm (69 inches)
Length (Operating)	114 cm (45 inches)
Length (Transporting)	229 cm (90 inches)
Height (Operating)	137 cm (54 inches)
Height (Transporting)	157 cm (62 inches)
Weight (Overall)	567 kg (1,250 lb)
Maximum Ground Speed	13 kph (8 mph)
Ground Clearance	20 cm (8 inches)

Electrical Specification Table

Battery Quantity	2 Toro HyperCell® batteries in the base configuration (expandable up to 4)
Rated Voltage	61.5V max
Ampere-Hours	81.7 Ah

Attachments/Accessories

A selection of Toro approved attachments and accessories is available for use with the machine to enhance and expand its capabilities. Contact your Authorized Service Dealer or authorized Toro distributor or go to www.Toro.com for a list of all approved attachments and accessories.

To ensure optimum performance and continued safety certification of the machine, use only genuine Toro replacement parts and accessories.

Operation

Before Operation

Understanding the Display-Screen Information

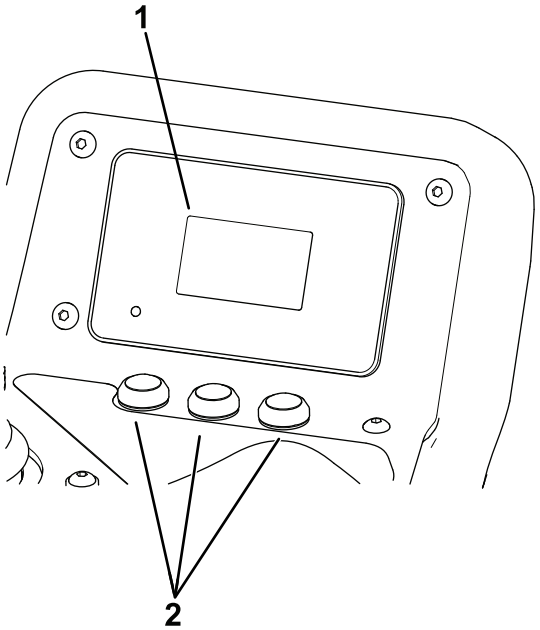

g499670

Figure 26

1. Display screen
2. Display-screen buttons

The display screen shows information about your machine, such as the operating status, various diagnostics, and other information about the machine.

- **Splash screen:** Shows the battery voltage and machine hour meter for a few seconds after you turn on the machine.

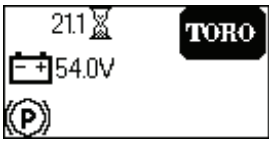

g575917

Figure 27

- **Run screen:** Shows the current speed of the machine and the battery charge level.

g575918

Figure 28

- **Charging screen:** Shows the battery charge percentage and amperage.

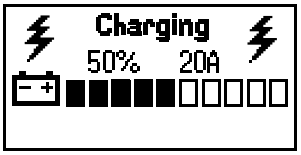

g360797

Figure 29

- **Speed adjustment screen:** Press the button to access this screen and adjust the maximum speed.

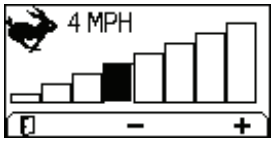

g575919

Figure 30

Understanding the Menu Items

To access the main menu, press the button from any of the main information screens.

Refer to the following tables for a description of the options available from the menus:

Note: Protected under Protected Menus—accessible only by entering PIN.

Main Menu

Menu Item	Description
FAULTS	Contains a list of the recent machine faults. Refer to the *Service Manual* or your authorized Toro distributor for more information on the FAULTS menu.
SERVICE	Contains information on the machine such as hours of use and counts. Refer to the Service (page 23) table.
DIAGNOSTICS	Lists various states and data that the machine currently has. You can use this information to troubleshoot certain issues, as it quickly tells you which machine controls are on/off and lists control levels (e.g., sensor values). Refer to the Diagnostics (page 24) table.

Main Menu (cont'd.)

SETTINGS	Allows you to customize and modify configuration variables on the display. Refer to the Settings (page 24) table.
ABOUT	Lists the model number, serial number, and software version of your machine. Refer to the About (page 24) table.

Service

Menu Item	Description
HOURS	List the total number of hours various components have been used: • Key on • Charge • Traction • Steering • Lift/lower • Front motor • Center motor • Back motor • Limp mode • Logic relay
COUNTS	Lists counts of various components: • Battery low • Charge cycles • Area rolled • Lift/lower cycles • Steer cycles
MACHINE CALIBRATION	Lists various calibration functions: • Joystick • Lift • Steer
MACHINE SERVICE	Lists various machine service functions: • Service rollers • Raise/lower • Steering

Diagnostics

Menu Item	Description
BATTERY	Indicates the status of the battery system.
BATTERY PACKS	Indicates the status of individual batteries.
CAN	Indicates the status of the machine communication bus.
DISPLAY	Indicates the status of the display.
FRONT MOTOR	Indicates the status of the front motor.
CENTER MOTOR	Indicates the status of the center motor.
BACK MOTOR	Indicates the status of the back motor.
LIFT/LOWER	Indicates the status of the lift actuator.
STEERING	Indicates the status of the steering actuator.

Settings

Menu Item	Description
UNITS	Controls the units used on the display screen. The menu choices are English or Imperial.
LANGUAGE	Controls the language used on the display screen.
BACKLIGHT	Controls the brightness of the display screen.
CONTRAST	Controls the contrast of the display screen.
PROTECTED MENUS 🔒	Allows you to access protected menus by inputting a passcode.
PROTECT SETTINGS 🔒	Controls the protected menus.
MAX SPEED 🔒	Controls the maximum machine speed.
OVERLAP 🔒	Controls how far the machine will overlap when the auto offset is activated.
AUTOMATIC DIRECTION 🔒	Shows if the machine will auto turn forwards or backwards.
ROLLER SLIPPING 🔒	Turns on or off the slip detection.
AUTO OFFSET 🔒	Turns on or off the auto offset feature.
ROLLER CLEAN 🔒	Turns on or off the roller clean feature.

About

Menu Item	Description
MODEL	Lists the model number of the machine.
SN	Lists the serial number of the machine.
S/W REV 🔒	Lists the software part number and revision of the machine.
FRONT MOTOR SW 🔒	Lists the software part number and revision of the front motor.
CENTER MOTOR SW 🔒	Lists the software part number and revision of the center motor.
BACK MOTOR SW 🔒	Lists the software part number and revision of the back motor.
LIFT/LOWER SW 🔒	Lists the software part number and revision of the lift actuator.
STEERING 🔒	Lists the software part number and revision of the steering actuator.
BATTERY 🔒	Lists the software part number and revision for all of the batteries.

Understanding the Display-Screen Icons

Refer to the following table for a description of each display-screen icon:

	Next
	Scroll up
	Scroll down
	Increase
	Decrease
	Access the menu.
	Exit the menu.
	Hour meter
	Operator is out of seat.
	Parking brake is engaged. The parking brake automatically engages when the machine is in neutral or if the machine experiences a power outage.
	Fast
	Slow
	Battery charge
	Menu item is locked.

Accessing the Protected Menus

Note: The factory default PIN code for you machine is “1234”.

If you changed the PIN code and forgot the code, contact your authorized Toro distributor for assistance.

1. Select the SETTINGS option.
2. Select the PROTECTED MENUS option.
3. To enter the PIN code, press the middle button until the appropriate digit appears, then press the right button to move to the next digit.
4. After all four digits are entered, press the middle button to submit the PIN code.

   If the PIN code has been entered correctly, the PIN icon will appear at the top right of all menu screens.

Activating the Automated-Offset Button

1. Select the button.
2. Scroll down to SETTINGS and press the button.
3. Scroll down to AUTO OFFSET and press the button.
4. Select ON.

   Note: To adjust the amount of overlap while using automated offset feature, return to the SETTINGS menu, open the OVERLAP option, and select the desired percentage.

Activating the Roller-Clean Button

1. Select the button.
2. Scroll down to SETTINGS and press the button.
3. Scroll down to ROLLER CLEAN and press the button.
4. Select ON.

Adjusting the Console Position

You can adjust the console position by loosening the bolts shown below.

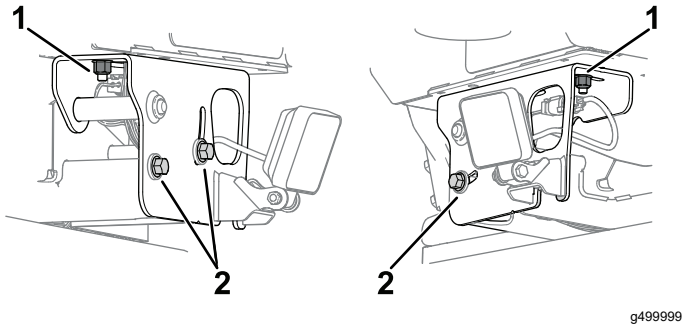

Figure 31

1. Loosen these bolts to move the console up and down.
2. Loosen these bolts to move the console side-to-side.

Adjusting the Footrest Position

1. Flip up the 2 latches on the footrest.

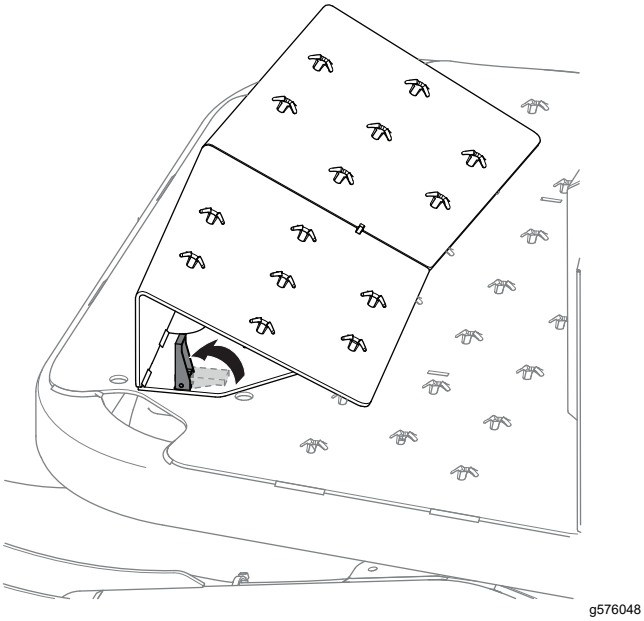

Figure 32

2. Remove the footrest from the original position and place it in the desired position.

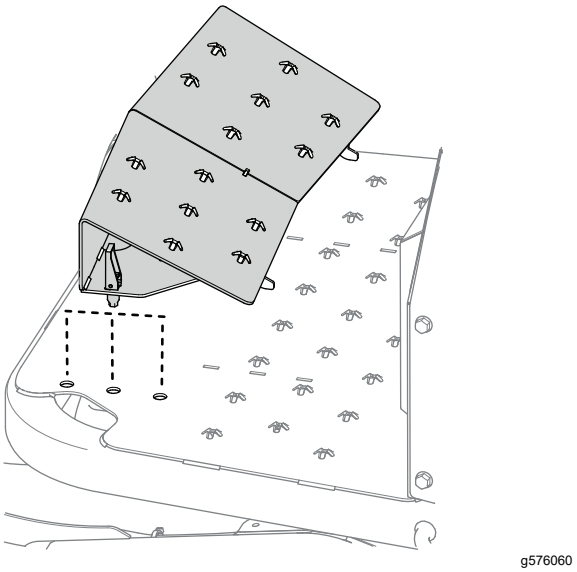

Figure 33

3. Flip down the latches.

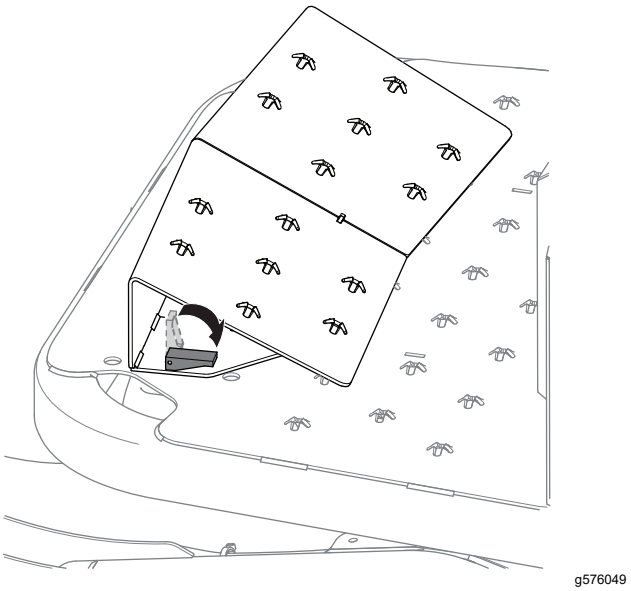

Figure 34

Adjusting the Work Light Positions

The work lights can be adjusted by manually tilting them upwards or downwards to the desired position.

Checking the Interlocks

Service Interval: Before each use or daily

Check the following components are functioning before operating the machine.

- Check that the seat switch is functioning properly.
- Verify that no rolling can be accomplished if the transport wheels are not fully raised.
- Ensure there is a proper gap at the drawbar latch and the machine cannot be unlatched from the drawbar.

During Operation

Note: Determine the left and right sides of the machine from the seated operating position.

Starting the Machine

1. Sit on the operator seat.
2. Turn the key to the ON position.

Shutting Off the Machine

⚠ CAUTION

Children or bystanders may be injured if they move or attempt to operate the machine while it is unattended.

Always remove the key and engage the parking brake when leaving the machine unattended.

Turn the key switch to the OFF position and remove the key.

Operating the Machine

1. Sit on the operator seat.
2. Turn on the machine.
3. Hold onto the joystick and move the joystick toward the direction you would like to travel.

   A green is typically rolled in a Z-pattern and therefore multiple direction changes will be required to roll the entire green surface.

   Note: To slow down the machine quickly, move the joystick in the opposite direction of travel, instead of returning it to the neutral position.
4. To stop the machine, release the joystick so that it returns to the neutral position.

   Important: **The machine can be shut down by turning the key to the OFF position in an emergency.**
5. At the end of rolling, park on a level surface and turn off the machine before leaving the operator seat.

Operating the Joystick

Use the joystick to control the speed and direction of the rollers. Moving the joystick to the right moves the machine to the right, and moving it to the left moves the machine to the left. The farther the joystick moves away from the original position, the faster the machine will travel.

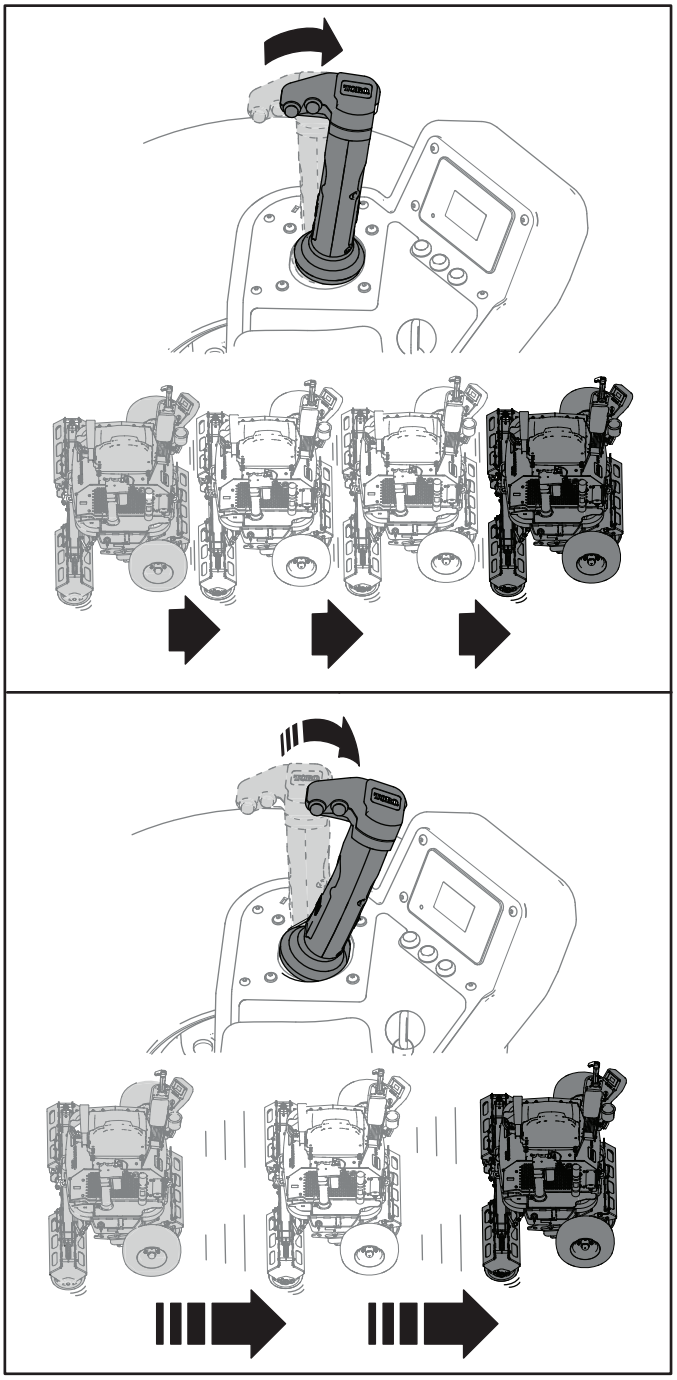

g576685

Figure 35

Note: Activating the joystick in the opposite direction of machine travel will act as a brake and slow the machine quicker than returning the joystick to neutral position.

Moving the joystick forward, or away from the operator seat, will steer the machine forward. Moving the joystick rearward, or toward the operator seat, will steer the machine rearward.

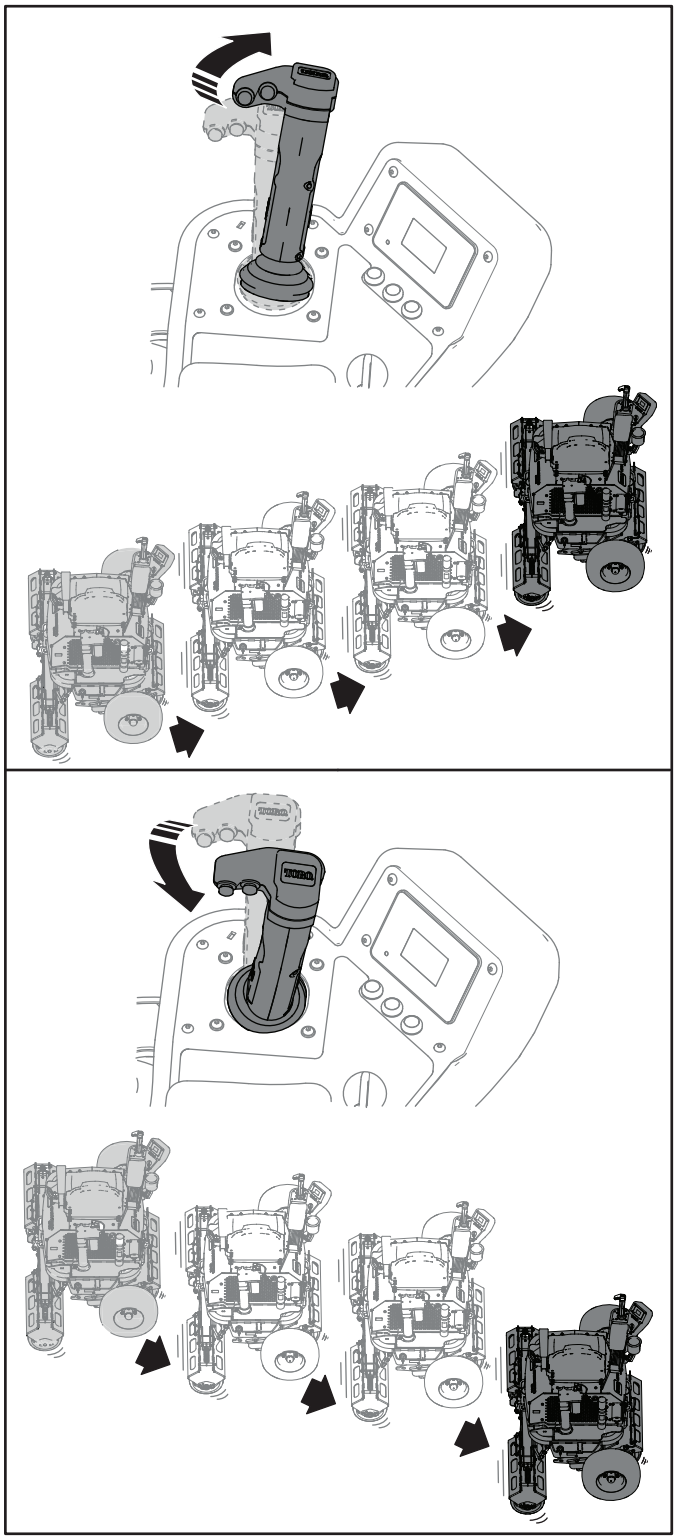

g579256

Figure 36

Using the Automated-Offset Button

Note: If necessary, activate the automated-offset button; refer to Activating the Automated-Offset Button (page 25).

While the machine is moving near the end of the green, press the automated-offset button and move the joystick in the desired direction to activate the automated-offset feature. This will go through steering action to automatically offset the machine to the programmed overlap, and will come to a stop with the rollers perpendicular to the new direction of travel.

Note: To cancel the feature, move the joystick in the opposite direction of travel.

The distance traveled to achieve the offset will vary depending on vehicle speed and programmed overlap. Practice using the feature in an open space, free of slopes and obstructions, to familiarize yourself with performance.

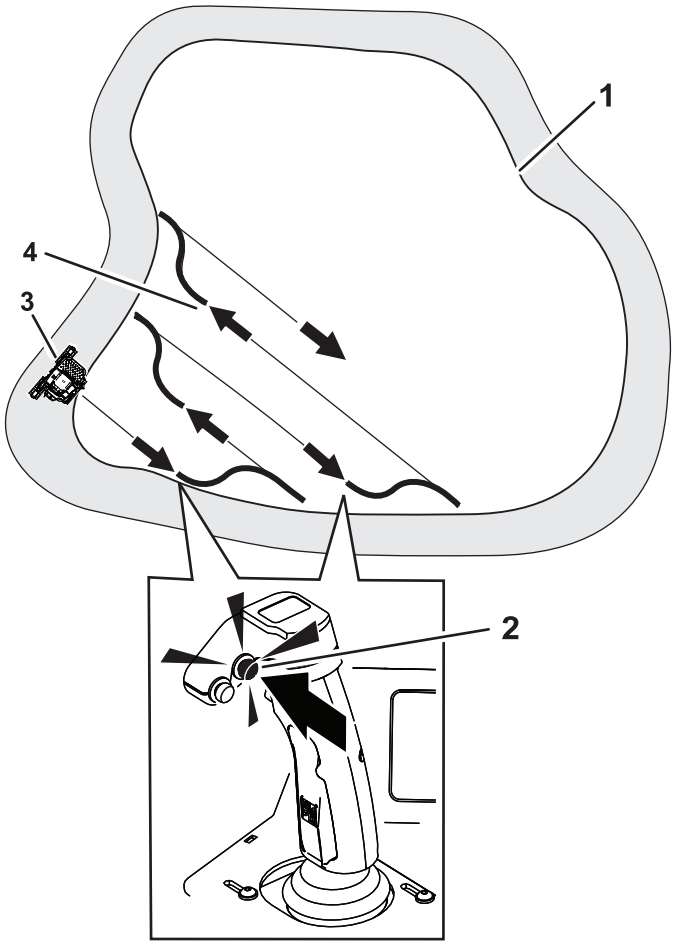

g499544

Figure 37

1. Golf course green
2. Press the button and release
3. Machine
4. Press the button before the transition

Using the Inch-Mode Function

Press and hold the inch-mode trigger and move the joystick in the desired direction. Return the joystick to the neutral position and release the trigger to deactivate the function.

Note: The machine speed is limited to 0.8 kph (0.5 mph) when inch-mode is activated.

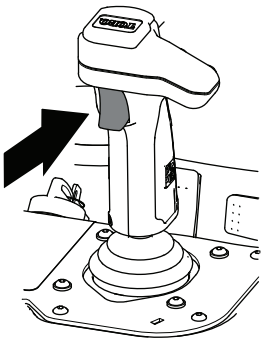

g575834

Figure 38

Cleaning the Rollers

Note: If necessary, activate the roller-clean button; refer to Activating the Roller-Clean Button (page 25).

1. Move to the machine to a flat surface.

   Note: Only use the roller cleaning feature in rough grass, as turf scuffing can occur.

2. Press the roller-clean button to enter roller-clean mode. Move and hold the joystick left or right until roller-clean feature completes.

   Note: The rollers will spin in opposite directions and the debris will collect on the face of the rollers.

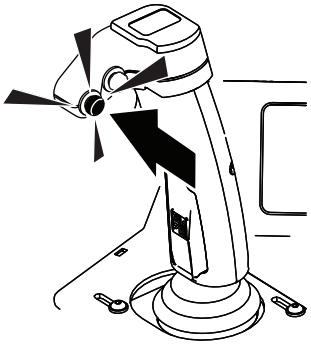

g575832

Figure 39

3. To cancel roller-clean mode, return the joystick to neutral and press the roller-clean button a second time.

4. Wait for the rollers to stop, and then turn off and exit the machine.
5. Clean the debris from the roller faces.

Monitoring the Battery-System Charge Level

Refer to the main information screen in the display screen to determine the battery-system charge level.

- When the battery level reaches a low percentage, a low-battery advisory appears on the display screen. When you are operating at this battery percentage, finish rolling, then transport the machine to a designated battery-charging area and charge the batteries; refer to Charging the Lithium-Ion Batteries (page 35).
- If the battery level becomes too low while you are operating the machine, an advisory appears on the display screen. While you are operating at this battery percentage, the roller will reduce the overall speed of the machine. Drive the machine back to the tow vehicle and transport your machine to a designated battery-charging area and charge the batteries; refer to Charging the Lithium-Ion Batteries (page 35).

After Operation

Transporting the Machine

Installing the Drawbar to the Towing Vehicle

1. Bring the drawbar to the back of the towing vehicle.
2. Remove the pin from the drawbar as shown in the following figure.

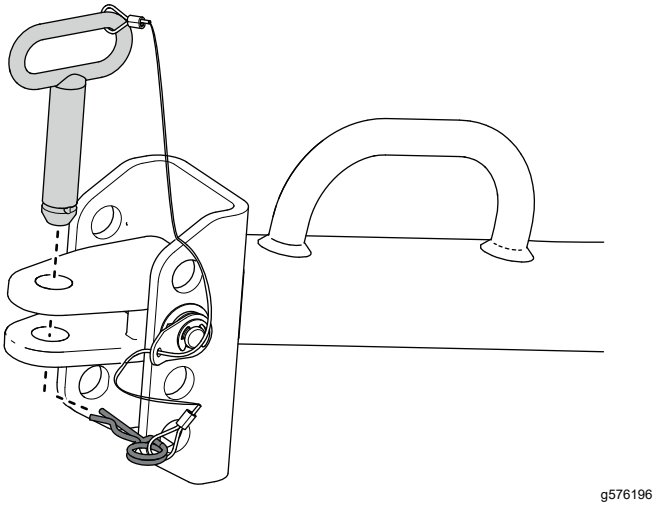

Figure 40

3. If necessary, adjust the drawbar tongue position; refer to Adjusting the Drawbar Tongue Position (page 31).
4. Connect the drawbar to the vehicle drawbar and secure it with the hitch pin and hairpin cotter.

Adjusting the Drawbar Tongue Position

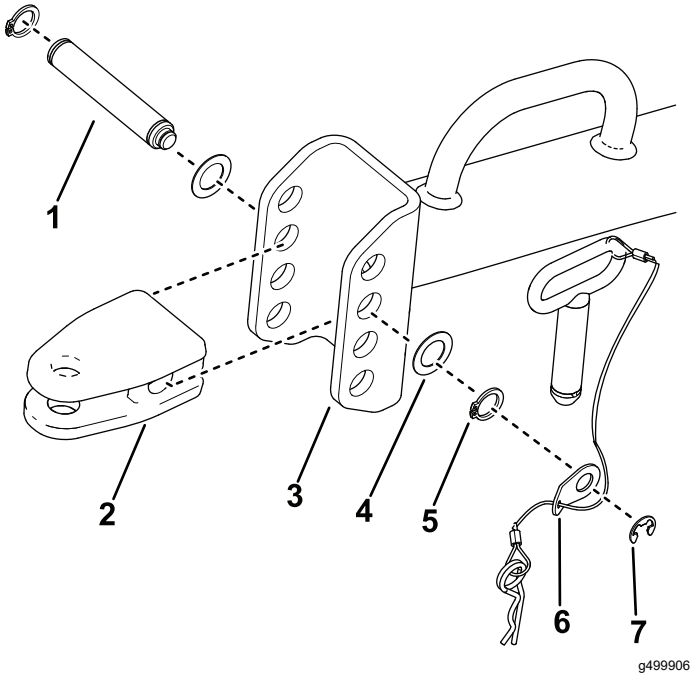

Figure 41

1. Clevis pin
2. Drawbar tongue
3. Drawbar clevis assembly
4. Thrust washer
5. Retaining ring (3/4 inch)
6. Lanyard washer
7. Retaining ring (1/2 inch)

1. Remove the components shown above (Figure 41).
2. Move the drawbar clevis pin to the desired position.

   Note: Select the hole that keeps the tongue of the roller as parallel to the ground as possible when the transport wheels are down.

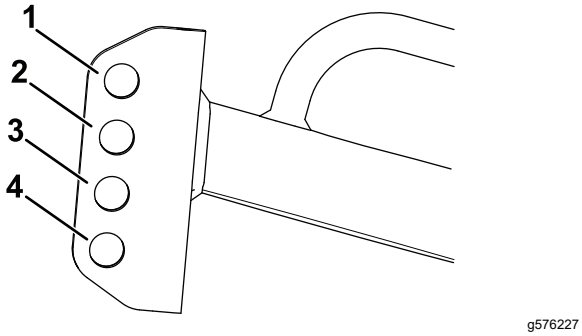

Figure 42

1. 35 to 38 cm (14 to 15 inches) from the ground
2. 32 to 35 cm (12 to 14 inches) from the ground
3. 28 to 32 cm (11 to 12 inches) from the ground
4. 25 to 28 cm (10 to 11 inches) from the ground

3. Secure the drawbar clevis pin to the trailer tongue with the components shown in Figure 41.

Disconnecting the Machine from the Drawbar

1. Park the machine on a level surface.
2. Use the transport-wheel switch to raise the transport wheels.

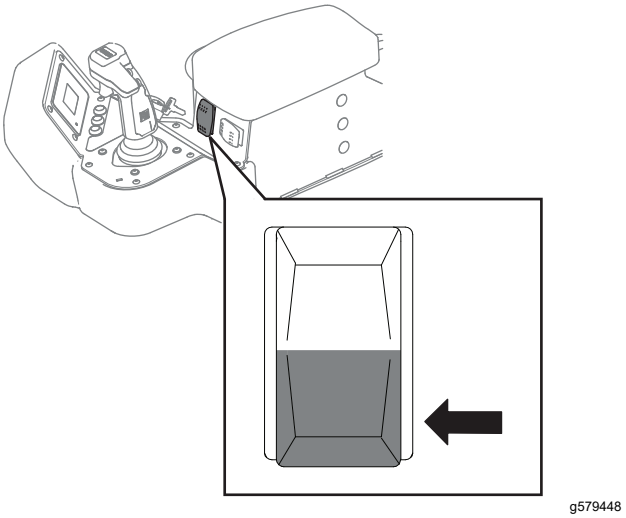

Figure 43

3. Press the latch-handle button and disengage the machine from the drawbar.

   Note: Applying pressure to the latch-handle button while raising the transport wheels may aid in disengaging the machine from the drawbar.

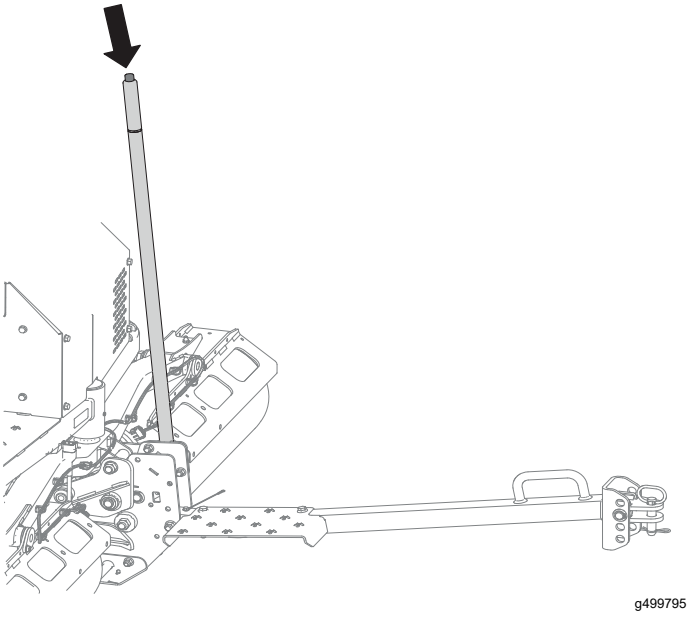

Figure 44

Connecting the Machine to the Drawbar

1. Drive the machine onto the drawbar.

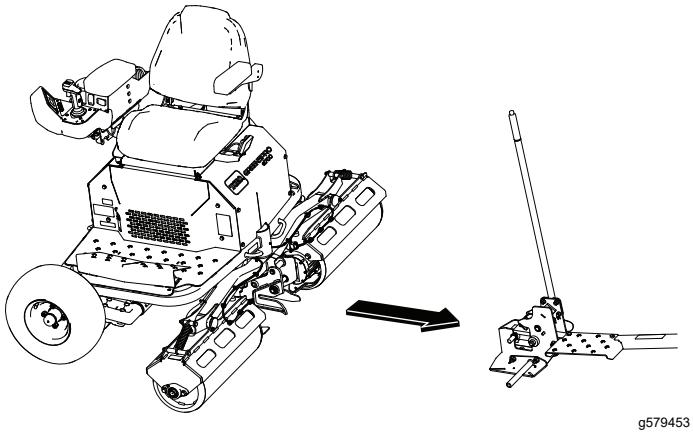

Figure 45

2. Verify the latch plate assembly on the drawbar is secured to the latch pin on the machine.
3. Use the transport-wheel switch to lower the transport wheels.

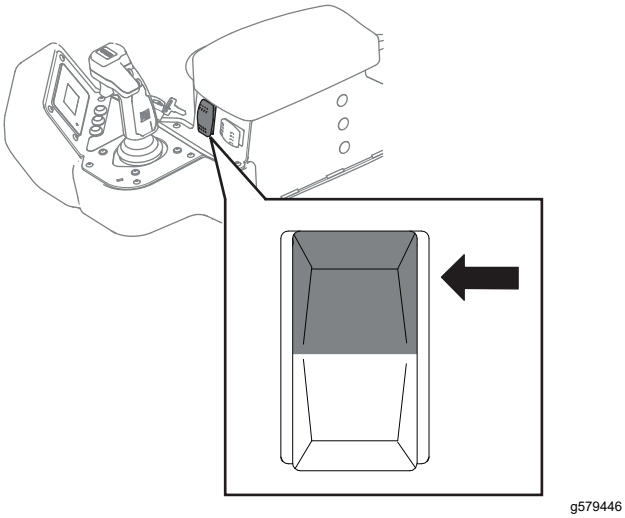

Figure 46

4. Turn off the machine and remove the key.
5. Insert the trailer safety pin into the capture plate.

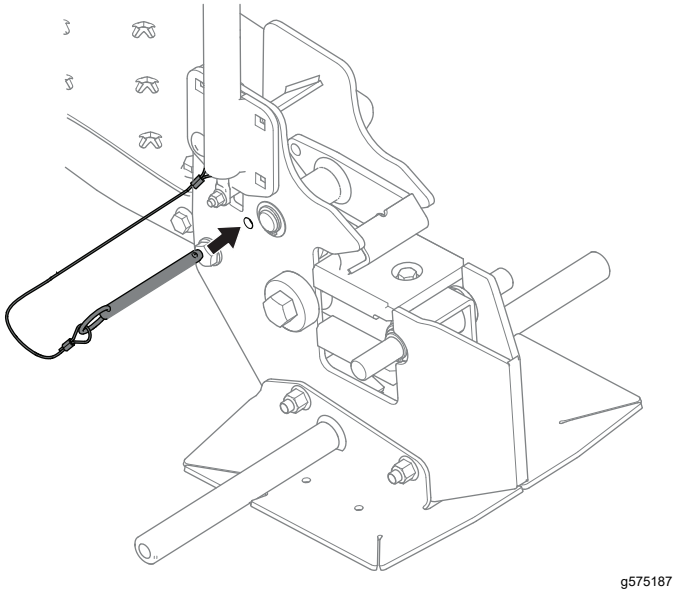

Figure 47

Adjusting the Drawbar Latch Stop Bolt

1. Connect the machine to the drawbar; refer to Connecting the Machine to the Drawbar (page 31).
2. Measure the distance between the stop-bolt head and the latch.
   - If there is a 1.5 mm (0.06 inch) gap, no further adjustments are necessary.
   - If the gap is greater or less than 1.5 mm (0.06 inch), proceed to the next step.

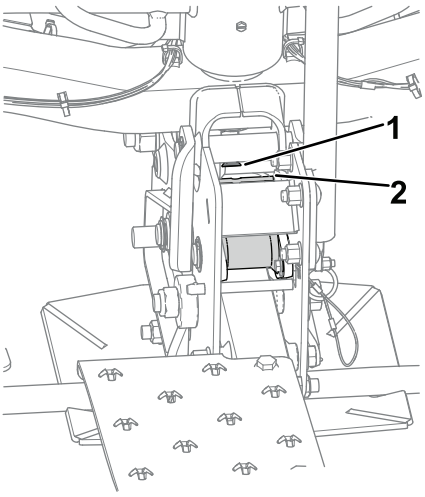

g614885

Figure 48

1. Stop-bolt head
2. Latch

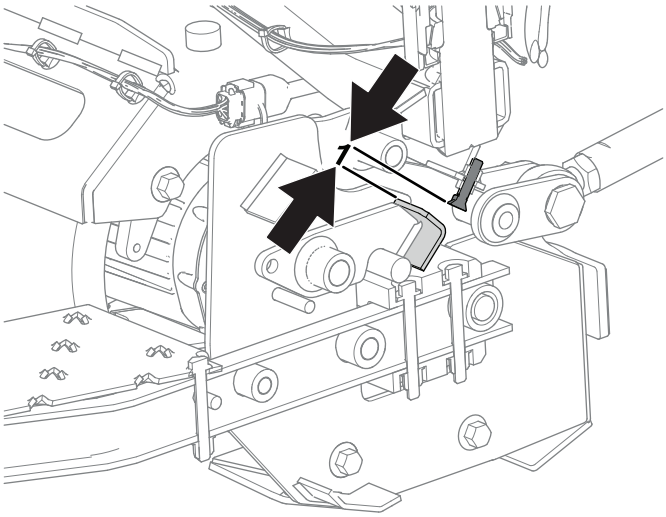

g614886

Figure 49

1. 1.5 mm (0.06 inch) gap

3. Adjust the stop bolt to achieve a 1.5 mm (0.06 inch) gap between the stop-bolt head and the latch.

Moving a Non-Functioning Machine

1. If you need to adjust the steering position of the machine, complete the steps below:
   A. On the steering actuator, turn the center bolt clockwise 4 turns to disengage the steering actuator and enable manual steering inputs; refer to the following figure.

   Important: **The bolt head should not force the E-clip out of the groove, or damage could occur.**

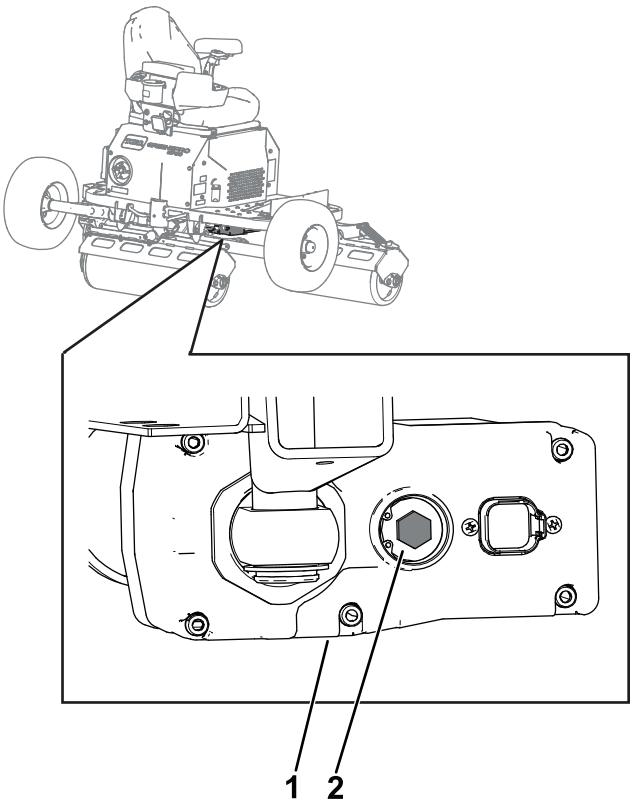

g499678

Figure 50

1. Steering actuator
2. Center bolt

   B. Use the double-roller head to manually steer the machine.
   C. Turn the center bolt counter-clockwise 4 times to re-engage the steering actuator.

   Note: Do not exceed more than 2.26 N·m (20 in-lb) of force when re-engaging the steering actuator.

2. If power is still available, complete the following steps:
   A. Hold the key in the START position for 5 seconds to unlock the roller parking brakes.

B. Push the machine onto the drawbar.

3. If power is not available, complete the following steps:

   A. Remove the drawbar from the tow vehicle.

   B. Hook the drawbar onto the roller.

   C. Attach the drawbar to the tow vehicle.

4. Use the trailer safety pin to secure the drawbar to the machine.

5. On the back of the machine, remove the electrical connector and the threaded hex plug on the lift actuator; refer to the following figure.

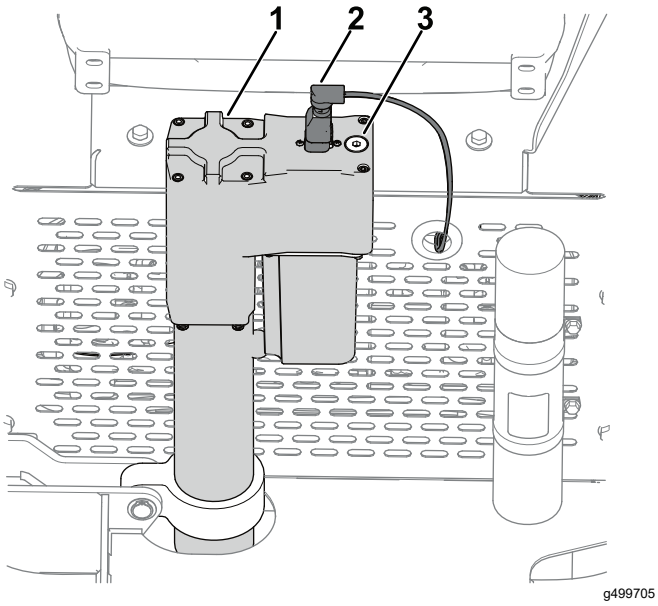

Figure 51

1. Lift actuator
2. Electrical connector
3. Threaded hex plug

6. Insert a ratchet hand drill or cordless drill into the hex plug opening and turn it clockwise to lower the transport wheels.

   Important: **Do not use an impact drill, or damage could occur.**

7. Install the plug and electrical connector on the lift actuator.

8. Lock the transport wheels to the lockout bracket with the pin as show in the following figure.

   Important: **Remove and place the pin in its storage position before raising or lowering the transport wheels. Failure to remove the pin from the lockout bracket before moving the transport wheels may cause damage to the machine.**

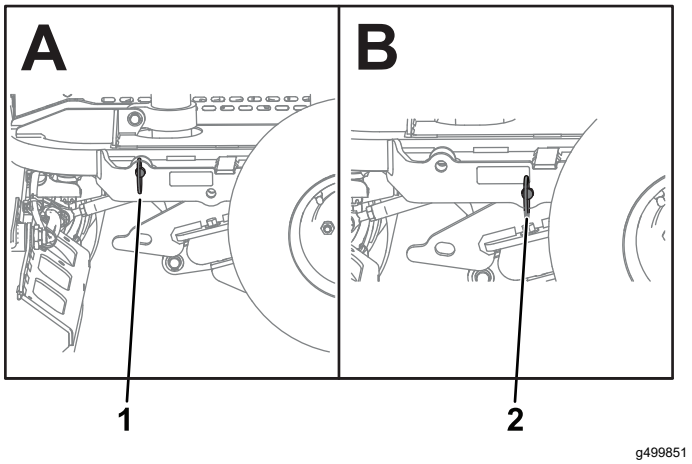

Figure 52

The transport wheel are shown raised in the figure.

1. Pin in storage position
2. Pin in lockout position

Understanding the Lithium-Ion Battery Charger

Understanding Power Source Requirements

⚠ DANGER

Contact with water while charging the machine could cause electric shock, causing injury or death.

- **Do not handle the plug or the charger with wet hands or while standing in water.**
- **Do not charge the batteries in the rain or in wet conditions.**

⚠ WARNING

A damaged power-supply cord can cause an electrical shock or a fire.

Thoroughly inspect the power-supply cord before using the charger. If the cord is damaged, do not operate the charger until you obtain a replacement.

An appropriate power-supply cord (for use in your geographic region) is supplied with your machine. Use this cord to charge the machine.

If you need to use an extension cord with your power-supply cord, ensure that the extension cord has 12 AWG wires and is rated for 250 V.

Important: **Check the power-supply cord periodically for holes or cracks in the insulation.**

Do not use a damaged cord. Do not run the cord through standing water or wet grass. Do not change the charger or the power-supply-cord plug in any way.

Charging the Lithium-Ion Batteries

⚠ CAUTION

Attempting to charge the batteries with a charger not provided by Toro can result in excessive heat and other related product malfunctions, which can lead to property damage and/or injury.

Use the Toro-provided chargers to charge the batteries.

Recommended temperature range for charging: 0° to 45°C (32° to 113°F)

For ideal charging performance, charge the batteries in temperatures that are within the recommended range. Charging the batteries in temperatures beyond the recommended range can result in reduced charging performance.

1. Park the machine in the designated location for charging.
2. Shut off the machine and remove the key.
3. Ensure that the battery-disconnect switch is in the ON position.

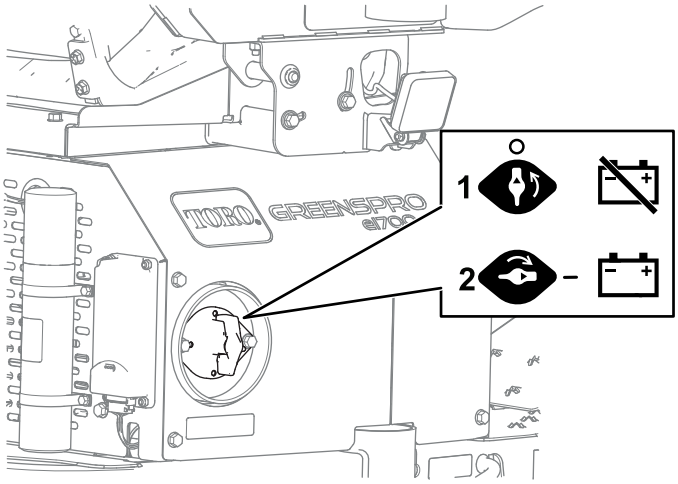

g579466

Figure 53

1. Off
2. On

4. Ensure that the connectors are free of dust and debris.
5. Plug the power-supply cord into the machine charger port.

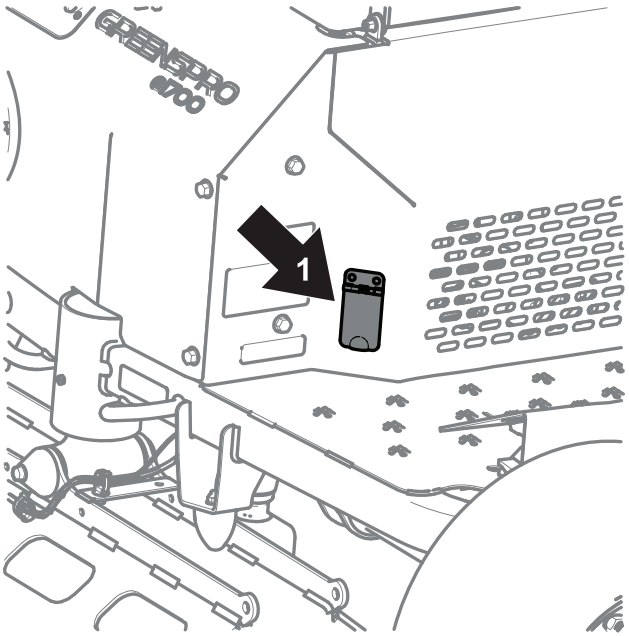

g580564

Figure 54

1. Charger port location

6. Insert the wall-plug end of the power-supply cord into a grounded electrical outlet.

   For power source requirements, refer to Understanding Power Source Requirements (page 34).
7. Observe the display screen to ensure that the batteries are charging.

   Note: The display screen shows the battery amperage, battery voltage, and charge status.

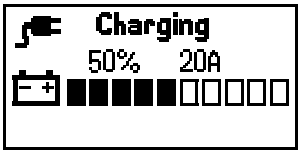

g469312

Figure 55

8. Disconnect the power-supply cord when the machine reaches a sufficient level; refer to Completing the Charging Process (page 36).

Completing the Charging Process

1. Remove the power-supply cord from the machine charger port.
2. Place the power-supply cord in a storage position that avoids damage.
3. Start the machine and verify the charge level using the display screen.

   When charging is complete, the display screen shows 10 solid bars.

Maintenance

Recommended Maintenance Schedule(s)

Maintenance Service Interval	Maintenance Procedure
After the first 8 hours	• Check the wheel lug nuts.
After the first 50 hours	• Change the roller motor oil.
Before each use or daily	• Check the interlocks. • Check the tire pressure.
Every 50 hours	• Grease the drive-roller bearings.
Every 100 hours	• Check the wheel lug nuts.
Every 400 hours	• Change the roller motor oil.
Before storage	• Paint chipped surfaces. • Perform all maintenance procedures before storage.

Pre-Maintenance Procedures

Turn off the battery-disconnect switch when servicing the machine; refer to Using the Battery-Disconnect Switch (page 39).

Lubrication

Greasing the Drive-Roller Bearings and Lift Actuator

Service Interval: Every 50 hours

Grease Type: No. 2 lithium grease

1. Park the machine on a level surface, shut off the machine, remove the key, and wait for all moving parts to stop before leaving the operating position.
2. Clean the grease fittings with a rag.
3. Connect a grease gun to each fitting.

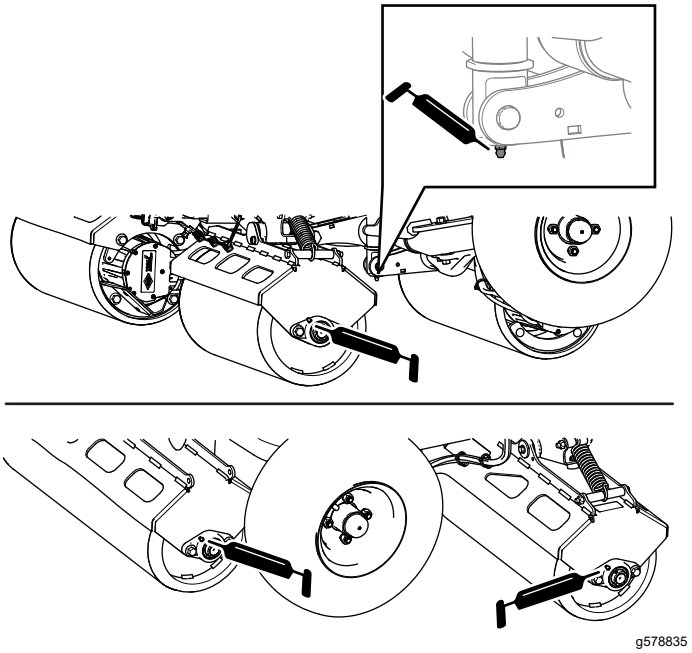

Figure 56

4. Pump grease into the fittings until grease begins to ooze out of the bearings.
5. Wipe up any excess grease.

   Important: **After greasing, run the machine off the turf somewhere briefly to disperse any excess lubricant and avoid damaging the turf.**

Electrical System Maintenance

Using the Battery-Disconnect Switch

1. Park the machine on a level surface, shut off the machine, remove the key, and wait for all moving parts to stop before leaving the operating position.
2. Unplug the battery charger if it is connected.
3. Turn the battery-disconnect switch to the ON or OFF position.

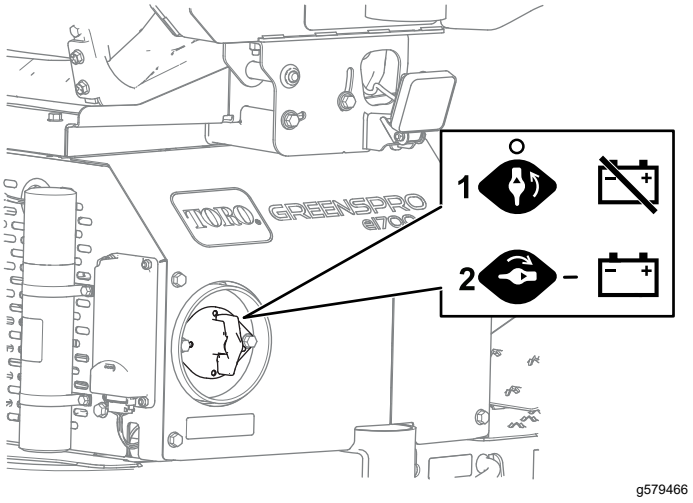

Figure 57

1. Turn the switch to the OFF position to de-energize the machine electrically.
2. Turn the switch to the ON position to energize the machine electrically.

Servicing the Batteries

Note: The machine is equipped with at least 2 lithium-ion batteries. Batteries can be added with the appropriate energy expansion kit for this machine.

A lithium-ion battery must be disposed of or recycled in accordance with local and federal regulations. If a battery requires service, contact your authorized Service distributor for assistance.

Maintaining the Lithium-Ion Batteries

⚠ WARNING

The batteries contain high voltage, which could burn or shock you.

- **Do not attempt to open the batteries.**
- **Use extreme care when handling a battery with a cracked case.**
- **Use only the charger designed for the batteries.**

The lithium-ion batteries hold a sufficient charge to perform intended work during its life span.

To achieve maximum life and use from your batteries, follow these guidelines:

- Do not open the battery.
- Store/park the machine in a clean, dry garage or storage area, **away from direct sunlight, heat sources, rain, and wet conditions.** Do not store it in a location where the temperature exceeds the range specified in Battery Storage Requirements (page 45). **Temperatures outside of this range will damage your batteries.** High temperatures during storage, especially at a high state of charge, reduces the life of the batteries.
- When storing the machine for more than 10 days, ensure that the machine is in a cool and dry location, out of sunlight, rain, and wet conditions.
- If you are rolling in hot conditions or in strong, direct sunlight, the battery may overheat. If this happens, a high-temperature alert will appear on the display and the machine will slow down.

  Immediately drive the machine to a cool location out of the sun, turn off the machine, and allow the batteries to cool fully before resuming operation.
- Use lights only when it is necessary.

Locating the Fuses

The electrical system is protected by fuses. It requires no maintenance. Refer to the machine *Service Manual* for information on testing and servicing the fuses.

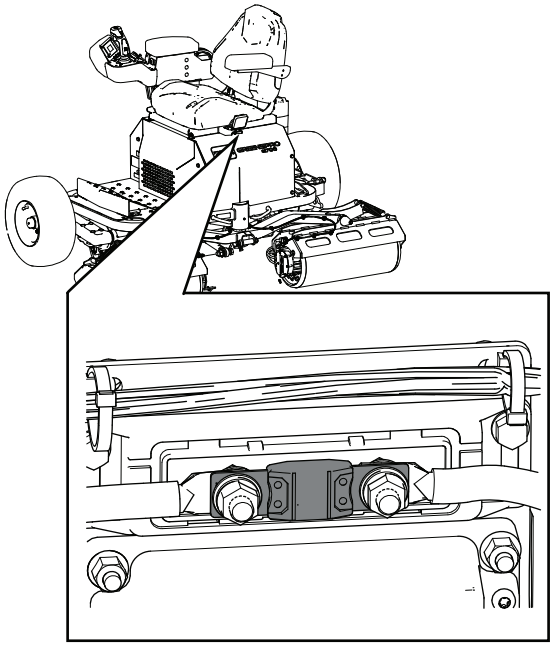

g580148

Figure 58

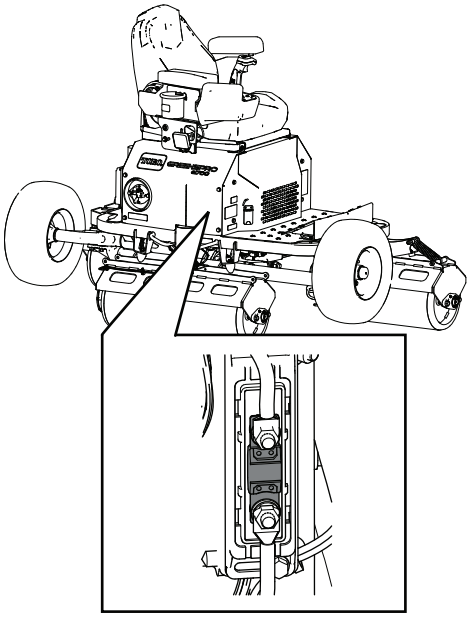

g580149

Figure 59

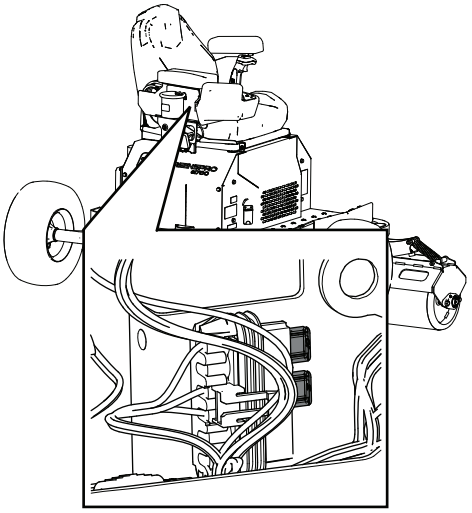

g580565

Figure 60

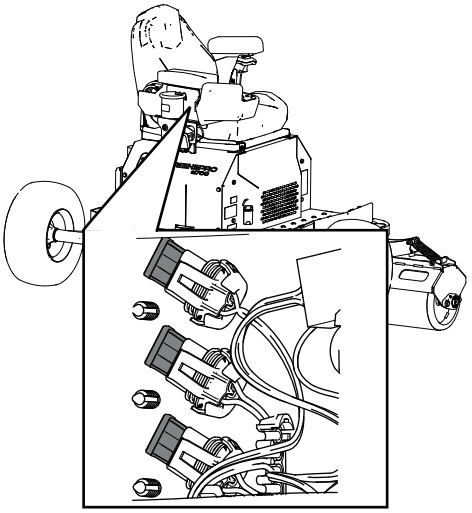

g580566

Figure 61

Drive System Maintenance

Checking the Transport Wheels Tire Pressure

Service Interval: Before each use or daily

Maintain the air pressure in the transport wheels at 124 kPa (18 psi).

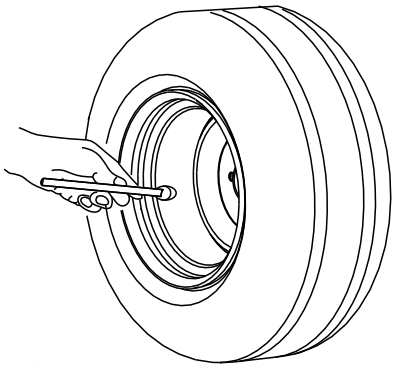

g001055

Figure 62

Checking the Wheel Lug Nuts

Service Interval: After the first 8 hours—Check the wheel lug nuts.

Every 100 hours—Check the wheel lug nuts.

Check and torque the wheel lug nuts to 94 to 122 N·m (70 to 90 ft-lb).

Changing the Roller Motor Oil

Service Interval: After the first 50 hours

Every 400 hours

Important: **Use only the specified gearbox oil. Other fluids could cause system damage.**

Fluid type: Mobil synthetic SHC 627 oil or Toro HV synthetic electric motor oil

Capacity: 150 mL (5 fl oz)

Preparing to Change the Roller Motor Oil

1. Transport the machine to a level surface and connect the machine to the drawbar; refer to Connecting the Machine to the Drawbar (page 31)
2. Turn the machine on.
3. Use the transport-wheel switch to raise the transport wheels.

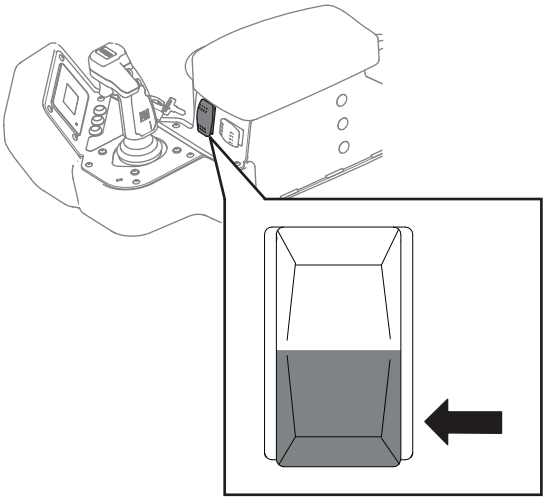

g579448

Figure 63

4. Turn the machine off and exit the machine.
5. Install the drawbar pin through the skid assembly.

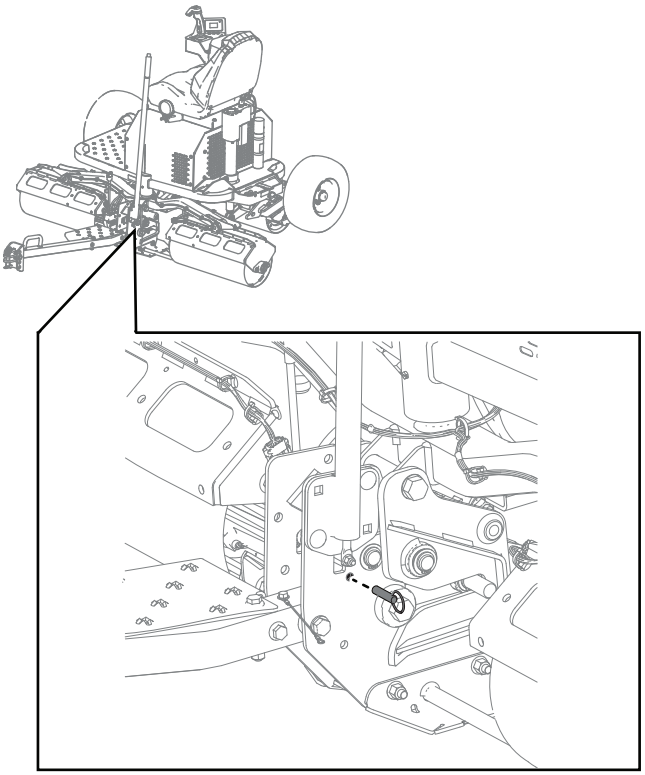

g499854

Figure 64

Removing the Roller Motors from the Roller Shells

1. Use the transport-wheel switch to slightly lower the transport wheels.

   Note: This slightly raises the machine to allow the center roller motor to pivot downwards.

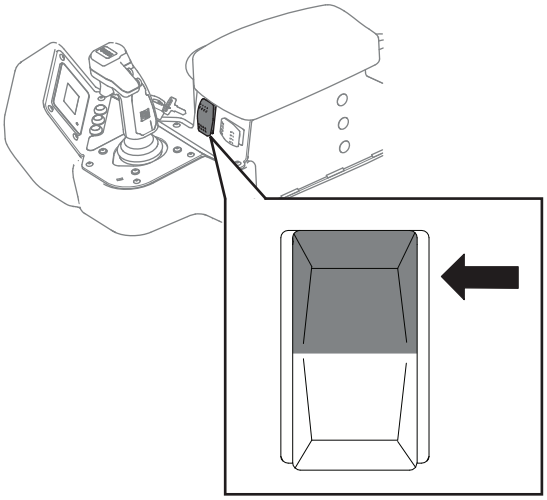

g579446

Figure 65

⚠ DANGER

A machine on a jack may be unstable and slip off the jack, injuring anyone beneath it.

- **Do not start the machine while the machine is on a jack.**
- **Block the tires when you are raising the machine with a jack.**
- **Support the machine with jack stands.**

2. Support the machine with jack stands.
3. Turn off the battery-disconnect switch.
4. Remove the outer roller motors by completing the steps below:

   A. Remove the right skid plate on the drawbar by removing the 2 bolts and 2 nuts. Repeat on the left skid plate.

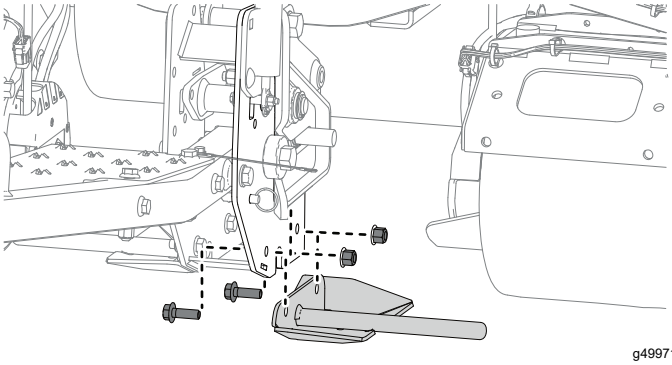

g499718

Figure 66

B. On each roller shell, remove the 2 cable ties that hold the motor wire harness and the 3 cable ties nearest the motor holding phase cable wires. Disconnect the connector from the motor wire harness.

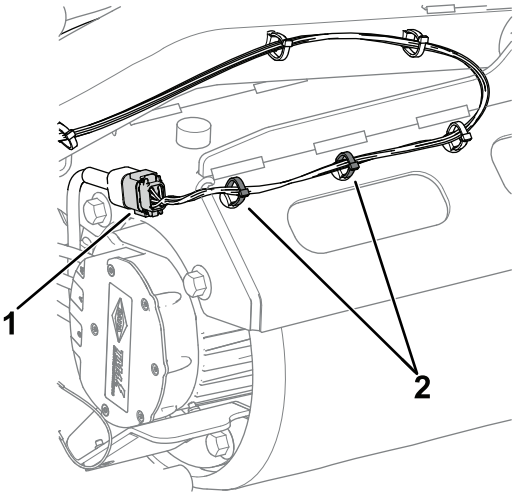

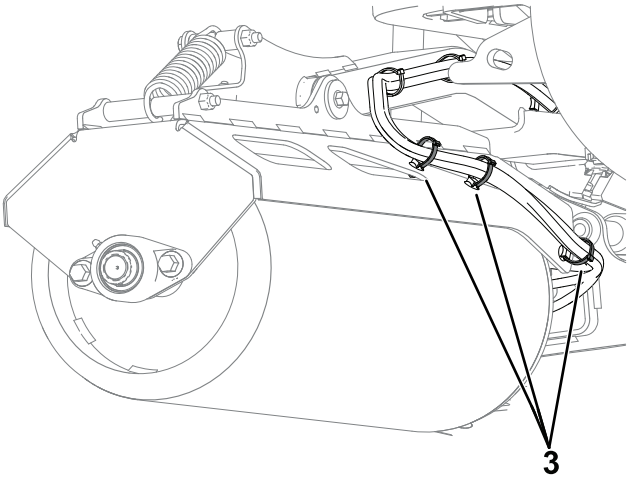

g499719

Figure 67

1. Motor wire harness connector
2. Motor wire harness cable tie
3. Motor phase wire cable tie

C. On each roller shell, remove the 2 bolts securing the roller shell to the roller motor. Retain the 2 bolts.

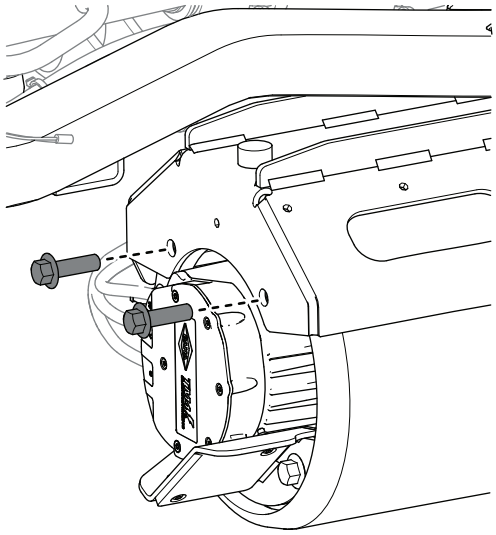

g581135

Figure 68

D. Remove the roller motor assembly from roller by sliding it straight out of the roller to disengage it from the splined shaft.

5. Remove the center roller motor by removing the 2 bolts securing the roller motor to the roller shell assembly. Retain the 2 bolts.

Changing the Roller Motor Oil

1. Position the roller motor as shown below. Over a suitable receptacle, remove the top plug and bottom plug. Allow the fluid to drain.

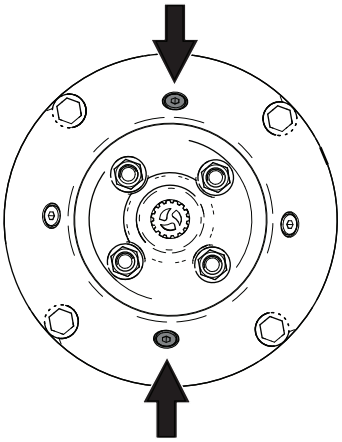

g499736

Figure 69

2. Install the bottom plug and torque it to 7 to 8 N·m (62 to 70 in-lb).
3. Remove the side plug.

4. Add fluid, as specified at the beginning of this procedure, through the top hole until the level reaches the side plug opening.

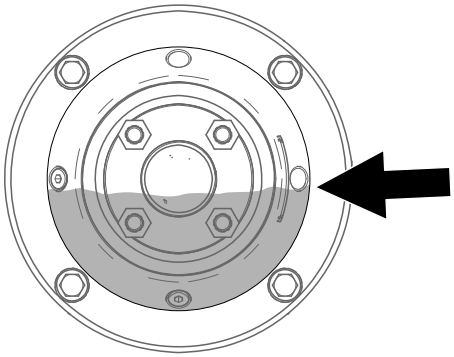

g380053

Figure 70

5. Install the top plug and side plug. Torque the plugs to 7 to 8 N·m (62 to 70 in-lb).

Installing the Roller Motors to the Roller Shells

Note: Grease the splined shafts with moly grease prior to installation.

1. Install the roller motor assembly into the roller by sliding it onto the splined roller shaft.
2. Use the previously removed 2 bolts to install the center roller motor to the shell assembly.
3. Install the outer roller motors by completing the steps below:
   A. On each roller shell, place the roller motor into the roller shell and secure it with the previously removed 2 bolts.

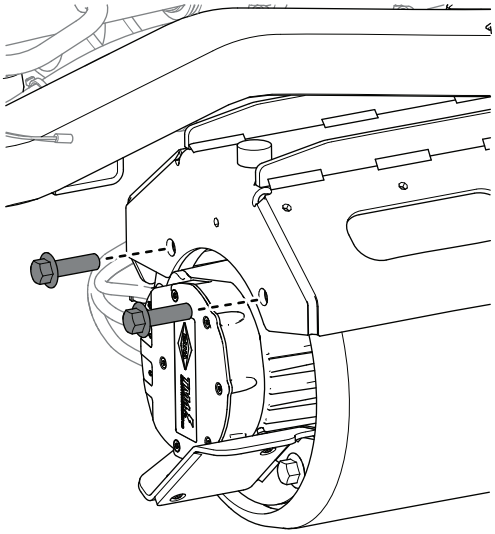

g581135

Figure 71

   B. On each roller shell, install the new 5 cable ties in the places where they were previously removed. Connect the motor wire harness connector to the harness.

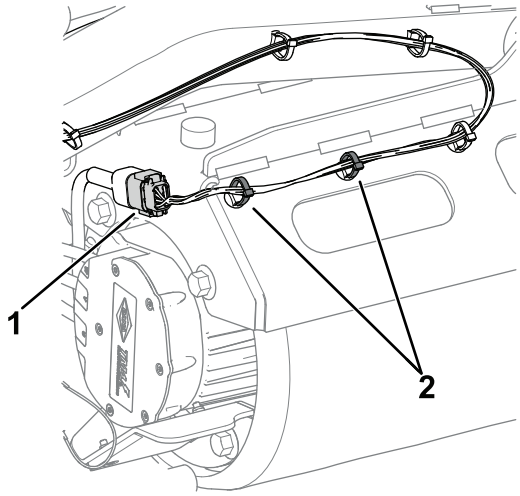

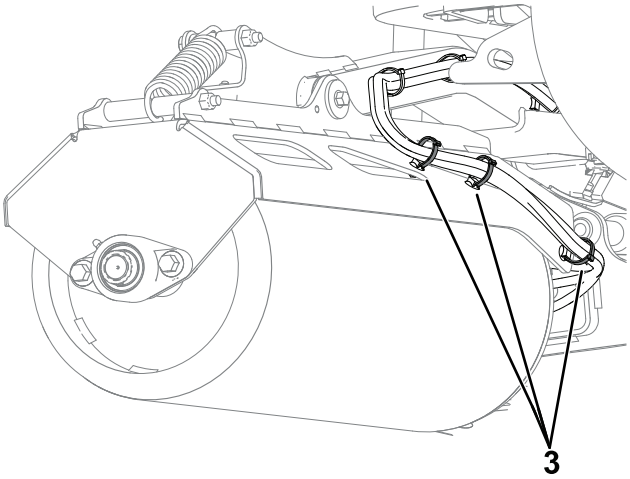

g499719

Figure 72

1. Motor wire harness connector
2. Motor wire harness cable tie
3. Motor phase wire cable tie

   C. Install the right skid plate on the drawbar and secure it with the 2 bolts and 2 nuts. Repeat on the left skid plate.

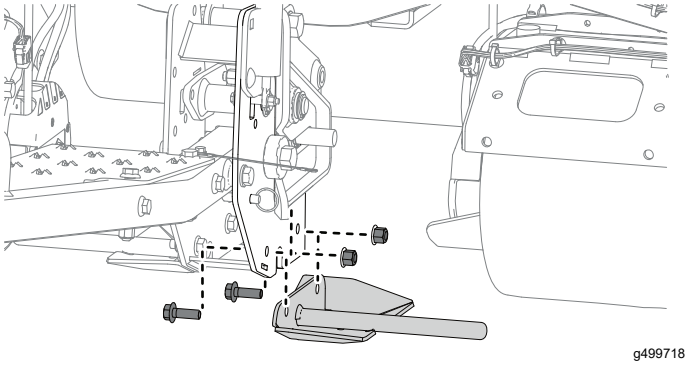

Figure 73

Storage

Cleaning and Storage

Service Interval: Before storage

Before storage

1. Park the machine on a level surface, shut off the machine, remove the key, and wait for all moving parts to stop before leaving the operating position.
2. Remove grass, dirt, and grime from the external parts of the entire machine using compressed air.

   Important: **Do not use water to clean the machine, otherwise you could damage the motors and other electric components.**
3. Grease the machine; refer to Greasing the Drive-Roller Bearings and Lift Actuator (page 38).
4. Check and tighten all fasteners. Repair or replace any part that is damaged or missing.
5. Paint all scratched or bare metal surfaces with paint from an authorized Toro distributor.
6. Store the machine in a clean, dry garage or storage area. Remove the key from the switch and store it in a memorable place. Cover the machine to protect it and keep it clean.
7. For prolonged storage, follow the battery storage requirements; refer to Battery Storage Requirements (page 45).

Battery Storage Requirements

Note: You do not need to remove the batteries from the machine for storage.

Refer to the temperature limits for storage in the following table:

Temperature Limits for Storage

Storage Temperature	Appropriate Storage Time
45° to 55°C (113° to 131°F)	1 week
25° to 45°C (77° to 113°F)	3 weeks
-20° to 25°C (-4° to 77°F)	52 weeks

Important: **Temperatures outside of these ranges will damage your batteries.**

The temperature that the batteries are stored at will affect their long-term life. Storage for long periods of time at extreme temperatures will reduce the battery life. For temperatures

above 25°C (77°F), only store the machine for the appropriate amount of time indicated in the table.

- Before you store the machine, charge or discharge the batteries between 40% to 60% (54.3V to 57.3V).

  Note: A 50% charge is optimal to ensure a maximum battery life. When the batteries are charged to 100% before storage, the battery life shortens.

  If you anticipate that the machine will be stored for a longer period of time, charge the batteries to around 60%.

- For every 6 months of storage, check the battery-charge level and ensure that it is between 40% to 60%. If the charge is below 40%, charge the batteries between 40% to 60%.
- You can use a multimeter to check the charge level when the machine is off. Refer to the following table for the amount of voltage that is equal to the charge level:

Voltage	Charge Level
57.3V	60%
55.4V	50%
54.3V	40%

- After charging the batteries, disconnect the battery charger from power. Disconnect the power connector during storage to minimize the discharging of the batteries.
- If you leave the charger on the machine, it will shut off after the batteries are fully charged and does not turn back on unless the charger is disconnected and reconnected.

Troubleshooting

Battery-Charger Error Codes

The battery-charger error codes display on the machine display as shown in Figure 74.

- SPN: Suspect Parameter Number
- FMI: Failure Mode Indicator
- OC: Number of occurences

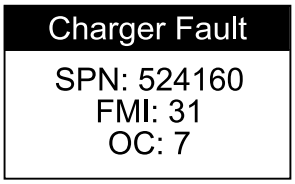

g377956

Figure 74

Problem	Possible Cause	Corrective Action
SPN 524035 or SPN 524042, FMI 9	1. Communication error with battery	1. Ensure that the connection of the signal wires to the battery is secure.
SPN 4992, FMI 16 or FMI 3	1. Battery high voltage	1. Ensure that the battery voltage is correct and the cable connections are secure; ensure that the battery is in good condition.
SPN 4990, FMI 31	1. BMS or battery fault detected	1. Contact an authorized Toro distributor.
SPN 520196, FMI 16	1. Battery amp hour limit exceeded	1. Possible causes include poor battery health, very deeply discharged battery, poorly connected battery, and/or high parasitic loads on battery while charging. Possible solutions: Replace batteries. Check DC connections. Disconnect parasitic loads. This error will clear once the charger is reset by cycling DC.
SPN 4992, FMI 4	1. Reverse polarity error	1. The battery is connected to the charger incorrectly. Ensure that the battery connections are secure.
SPN 520193, FMI 3	1. High AC voltage error (>270VAC)	1. Connect charger to an AC source that provides stable AC between 85 - 270 VAC / 45-65 Hz.
SPN 524032, FMI 3	1. Charger failed to initialize	1. The charger failed to turn on properly. Disconnect the AC input and battery connection for 30 seconds before retrying.
SPN 520193, FMI4	1. Low AC voltage oscillation error	1. The AC source is unstable. Could be caused by undersized generator or severely undersized input cables. Connect charger to an AC source that provides stable AC between 85 - 270 VAC / 45-65 Hz.
SPN 524033, FMI 31	1. Re-programming failed	1. Software upgrade failure or script operation failure. Ensure that the new software is correct.

Problem	Possible Cause	Corrective Action
SPN 524035 or SPN 524042, FMI 9	1. Communication error with battery	1. Ensure that the connection of the signal wires to the battery is secure.
SPN 524160, FMI 31	1. Internal charger fault	1. Remove the AC connection and battery connection for a minimum of 30 seconds and retry. If it fails again, please contact an authorized Toro distributor.

Notes:

Notes:

California Proposition 65 Warning Information

What is this warning?

You may see a product for sale that has a warning label like the following:

WARNING: Cancer and Reproductive Harm—www.p65Warnings.ca.gov.

What is Prop 65?

Prop 65 applies to any company operating in California, selling products in California, or manufacturing products that may be sold in or brought into California. It mandates that the Governor of California maintain and publish a list of chemicals known to cause cancer, birth defects, and/or other reproductive harm. The list, which is updated annually, includes hundreds of chemicals found in many everyday items. The purpose of Prop 65 is to inform the public about exposure to these chemicals.

Prop 65 does not ban the sale of products containing these chemicals but instead requires warnings on any product, product packaging, or literature with the product. Moreover, a Prop 65 warning does not mean that a product is in violation of any product safety standards or requirements. In fact, the California government has clarified that a Prop 65 warning "is not the same as a regulatory decision that a product is 'safe' or 'unsafe.'" Many of these chemicals have been used in everyday products for years without documented harm. For more information, go to https://oag.ca.gov/prop65/faqs-view-all.

A Prop 65 warning means that a company has either (1) evaluated the exposure and has concluded that it exceeds the "no significant risk level"; or (2) has chosen to provide a warning based on its understanding about the presence of a listed chemical without attempting to evaluate the exposure.

Does this law apply everywhere?

Prop 65 warnings are required under California law only. These warnings are seen throughout California in a wide range of settings, including but not limited to restaurants, grocery stores, hotels, schools, and hospitals, and on a wide variety of products. Additionally, some online and mail order retailers provide Prop 65 warnings on their websites or in catalogs.

How do the California warnings compare to federal limits?

Prop 65 standards are often more stringent than federal and international standards. There are various substances that require a Prop 65 warning at levels that are far lower than federal action limits. For example, the Prop 65 standard for warnings for lead is 0.5 µg/day, which is well below the federal and international standards.

Why don't all similar products carry the warning?

- Products sold in California require Prop 65 labelling while similar products sold elsewhere do not.
- A company involved in a Prop 65 lawsuit reaching a settlement may be required to use Prop 65 warnings for its products, but other companies making similar products may have no such requirement.
- The enforcement of Prop 65 is inconsistent.
- Companies may elect not to provide warnings because they conclude that they are not required to do so under Prop 65; a lack of warnings for a product does not mean that the product is free of listed chemicals at similar levels.

Why does Toro include this warning?

Toro has chosen to provide consumers with as much information as possible so that they can make informed decisions about the products they buy and use. Toro provides warnings in certain cases based on its knowledge of the presence of one or more listed chemicals without evaluating the level of exposure, as not all the listed chemicals provide exposure limit requirements. While the exposure from Toro products may be negligible or well within the "no significant risk" range, out of an abundance of caution, Toro has elected to provide the Prop 65 warnings. Moreover, if Toro does not provide these warnings, it could be sued by the State of California or by private parties seeking to enforce Prop 65 and subject to substantial penalties.

TORO®

Count on it.