Form No. 3351–904

Gear Pump Kit
Greensmaster® 3050
Part No. 107–2578

Installation Instructions

1. Position the machine on a level surface, lower the cutting units, stop the engine, engage the parking brake, and remove the key from the ignition switch.

2. Drain the hydraulic fluid from the reservoir and the system. Refer to the Traction Unit Operator's Manual for the draining instructions.

3. Remove the hose clamps securing the pump inlet hoses to the gear pump (Fig. 1). Disconnect the hoses from the pump.

4. Disconnect the hydraulic hoses from the pump fittings (Fig. 1).

Important Label the hoses and the fittings to assure they are reinstalled correctly to the pump.

5. Disconnect and remove the hydraulic hose from the control valve, as shown in figure 1. Install the new hydraulic hose to the control valve (Fig. 2).

Note: Make sure the O–ring is lubricated and in place when assembling hose.

6. Remove the fittings from the pump (Fig. 1).

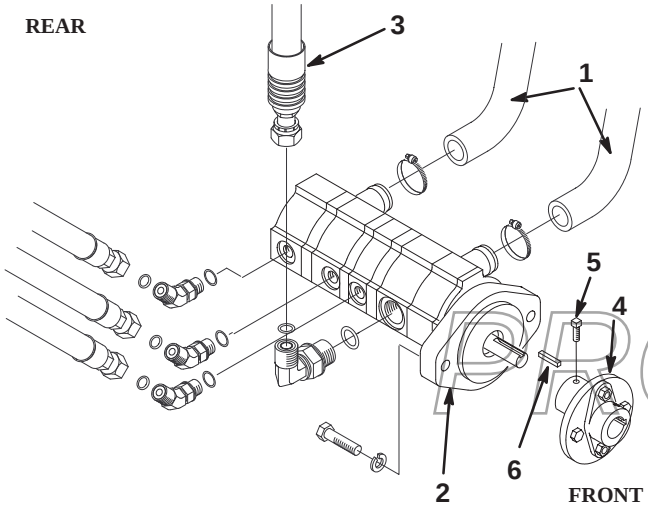

Figure 1

1. Pump inlet hoses
2. Gear pump
3. Remove this hydraulic hose from the control valve
4. Pump hub
5. Set screw
6. Square key

7. Loosen the set screw securing the pump shaft to the pump hub (Fig. 1).

8. Remove the two capscrews and lock washers securing the gear pump flanges to the pump adapter (Fig. 1).

9. Remove the gear pump. Make sure to account for the square key on the pump shaft (Fig. 1).

10. Install the new gear pump and previously removed square key to the pump hub (Fig. 2).

11. Using the two new capscrews (included in kit) and old lockwashers, secure the gear pump to the pump adapter (Fig. 2).

12. Tighten the set screw securing the gear pump shaft to the pump hub (Fig. 2).

Important Make sure pump shaft and hub are properly aligned and rubber coupler is not deformed.

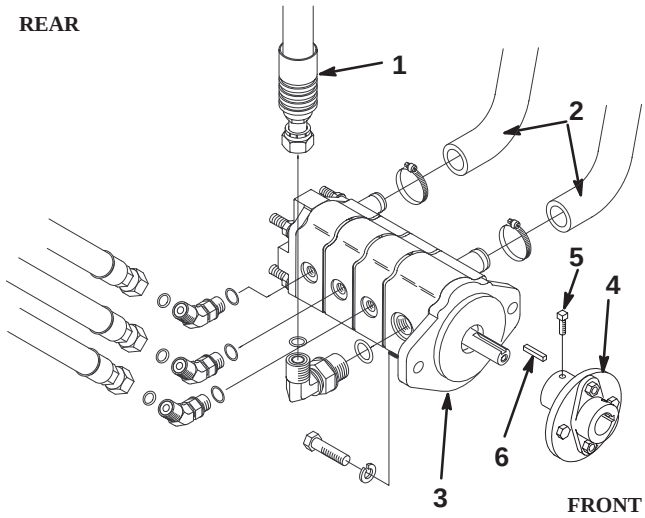

Figure 2

1. New hydraulic hose to control valve
2. Pump inlet hoses
3. Gear pump
4. Pump hub
5. Set screw
6. Square key

PROTOTYPE

Note: Make sure O–rings are lubricated and in place when assembling fittings and hoses.

13. Install the fittings to the pump (Fig. 2).

14. Install the hydraulic hoses to the fittings(Fig. 2).

15. Mount the inlet hoses to the pump with the previously removed clamps (Fig. 2).

16. Tighten all the fasteners, fittings and hoses.

© 2004 by The Toro Company
8111 Lyndale Avenue South
Bloomington, MN 55420-1196

Contact us at www.Toro.com
All Rights Reserved
Printed in the USA

17. Fill the hydraulic reservoir with the correct hydraulic fluid. Refer to Traction Unit Operator's Manual for fluid requirements.

18. Operate the machine, check the hydraulic fluid level and add fluid as required.

Warning

Hydraulic fluid escaping under pressure can penetrate skin and cause injury.

- **Make sure all hydraulic fluid hoses and lines are in good condition and all hydraulic connections and fittings are tight before applying pressure to the hydraulic system.**
- **Keep your body and hands away from pin hole leaks or nozzles that eject high pressure hydraulic fluid.**
- **Use cardboard or paper to find hydraulic leaks.**
- **Safely relieve all pressure in the hydraulic system before performing any work on the hydraulic system.**
- **Seek immediate medical attention if fluid is injected into skin.**

PROTOTYPE