Form No. 3484-470 Rev A

TORO®

Count on it.

Parts Catalog

# Titan® MYRide® 48in Zero Turn

## Riding Mower

**Model No. 76411—Serial No. 422000000 and Up**

Register at www.Toro.com.
Original Instructions (EN)

*3484-470* A

# Ordering Replacement Parts

To order replacement parts, please supply the part number, the quantity, and the description of each part desired.

### Understanding Reference Numbers

Each identified part in an illustration has a reference number. The reference number for a part also appears in the parts list, along with other information about the part.

This catalog uses two special reference number formats, one to indicate parts in a service assembly and another to indicate the quantity of a given part in an illustration.

### Service Assembly Reference Numbers

Parts in service assemblies have reference numbers in the form a:b. The a represents the reference number of the entire service assembly and the b represents a sequential number unique to each part within the service assembly.

For example, a wheel assembly might be identified by reference number 6, the tire by 6:1, the valve by 6:2, and the wheel by 6:3. When you order the assembly identified by reference number 6, you receive all parts identified by reference numbers 6:1,6:2, and 6:3. However, you may also order any part individually. Reference numbers of this type appear in illustration and in parts lists.

### Reference Numbers Indicating Quantity

In an illustration, if a reference number indicates more than one part, the reference number has the form nX y. The n represents the quantity of the part, the X is the multiplication symbol, and the y represents the reference number.

For example, in an illustration, the reference number 2X 37 means that two of the parts identified by reference number 37 are indicated.

# Contents

Frame Assembly . . . . . 4
Deck Lift Assembly . . . . . 6
Caster Fork and Wheel Assembly . . . . . 8
Hydraulic Drive Assembly . . . . . 10
LH Hydro Transmission Assembly No. 147-2860 . . . . . 12
RH Hydro Transmission Assembly No. 147-2861 . . . . . 14
Fan and Pulley Kit Assembly No. 135-7343 . . . . . 16
Parking Brake Assembly . . . . . 18
Rear Wheel Assembly . . . . . 20
Motion Control Assembly . . . . . 22
Engine and Muffler Assembly . . . . . 24
Fuel System Assembly . . . . . 26
Fuel Tank Assembly No. 161-6588 . . . . . 28
Electrical Assembly . . . . . 30
Deck Assembly . . . . . 32
Deck Decal Assembly No. 147-8749 . . . . . 34
Arm Rest Assembly . . . . . 36
Seat Pan Assembly . . . . . 38
Clutch Assembly . . . . . 40
Attachments and Accessories . . . . . 42

**© 2026—The Toro® Company**
**8111 Lyndale Avenue South**
**Bloomington, MN 55420**



**Contact us at www.Toro.com.**
**Printed in the USA.**
**All Rights Reserved**

# Frame Assembly

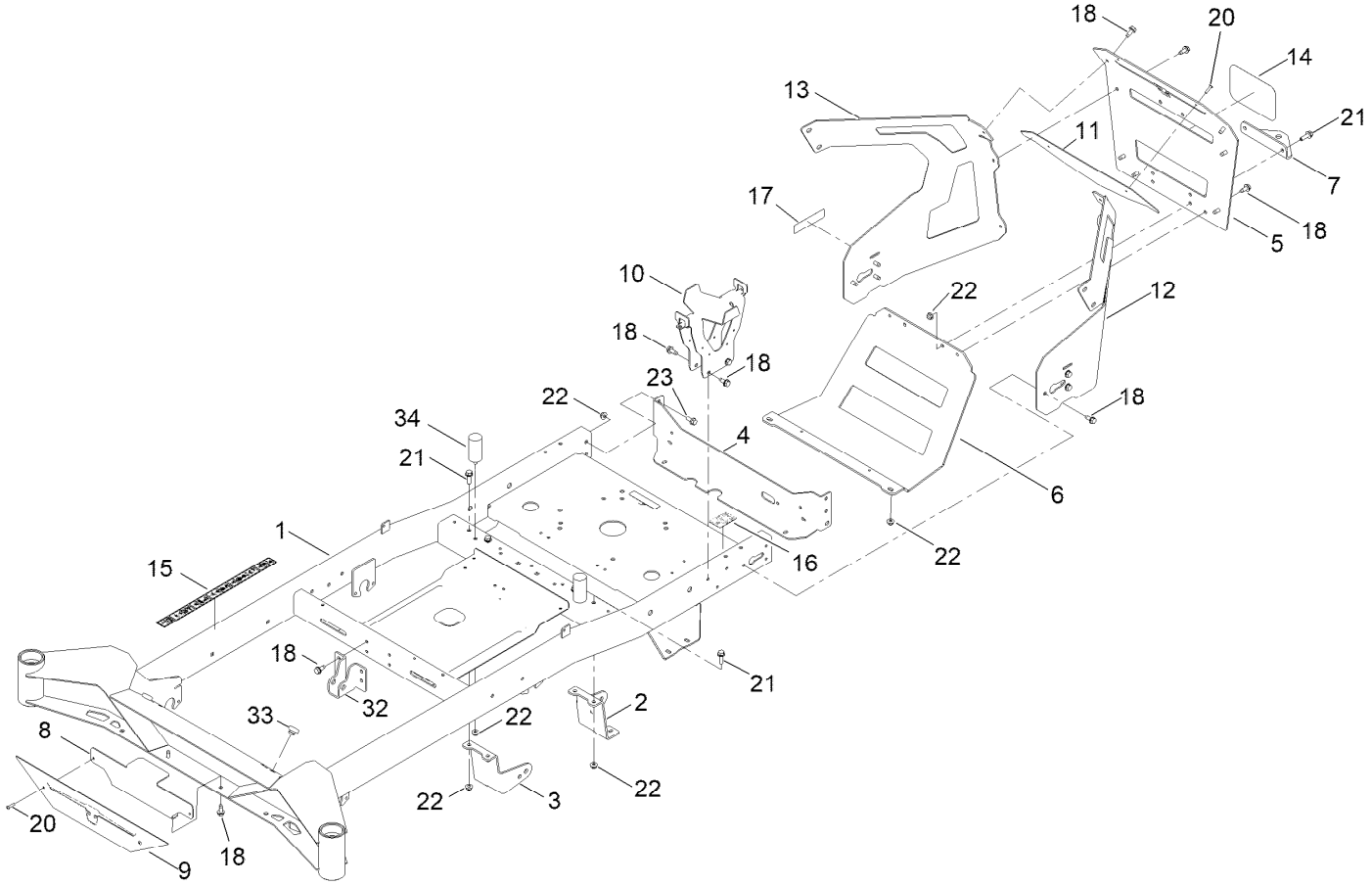

# Frame Assembly (continued)

| Ref. | Part Number | Qty. | Description |
|---|---|---|---|
| 1 | 161-6608 | 1 | Service ASM-Frame, Titan |
| 2 | 161-6506-01 | 1 | Mount-Drive, LH |
| 3 | 161-6507-01 | 1 | Mount-Drive, RH |
| 4 | 163-3137-03 | 1 | Plate-Mount, Rear |
| 5 | 147-2998-03 | 1 | Guard-Engine |
| 6 | 163-6003-03 | 1 | Guard-Muffler |
| 7 | 117-1232-03 | 1 | Bracket-Hitch |
| 8 | 147-2878-01 | 1 | Plate-Backer |
| 9 | 147-2879-03 | 1 | Logo-Plate-Front |
| 10 | 145-6283-01 | 1 | Wa-Battery Mount |
| 11 | 147-2999-01 | 1 | Plate-Backer |
| 12 | 147-2996-01 | 1 | Guard-Engine LH |
| 13 | 147-2997-01 | 1 | Guard-Engine-RH |
| 14 | 99-4693 | 1 | Decal |
| 15 | 144-5288 | 1 | Decal-Warning |
| 16 | 161-6207 | 1 | Decal-Bypass |
| 17 | 142-5864 | 1 | Decal-Spark Arrester |
| 18 | 32144-70 | 23 | Screw-HWHTF |
| 20 | 130-8451 | 4 | Rivet-Trifold |
| 21 | 139-2596 | 6 | Screw-HHF |
| 22 | 119-4041 | 14 | Nut-HF |
| 23 | 139-2598 | 4 | Screw-HHF |
| 32 | 145-6323-01 | 1 | Bracket-Mount Damper, Lower |
| 33 | 140-3460 | 2 | Bumper-Rubber |
| 34 | 145-6310 | 2 | Bumper-Rubber |

# Deck Lift Assembly

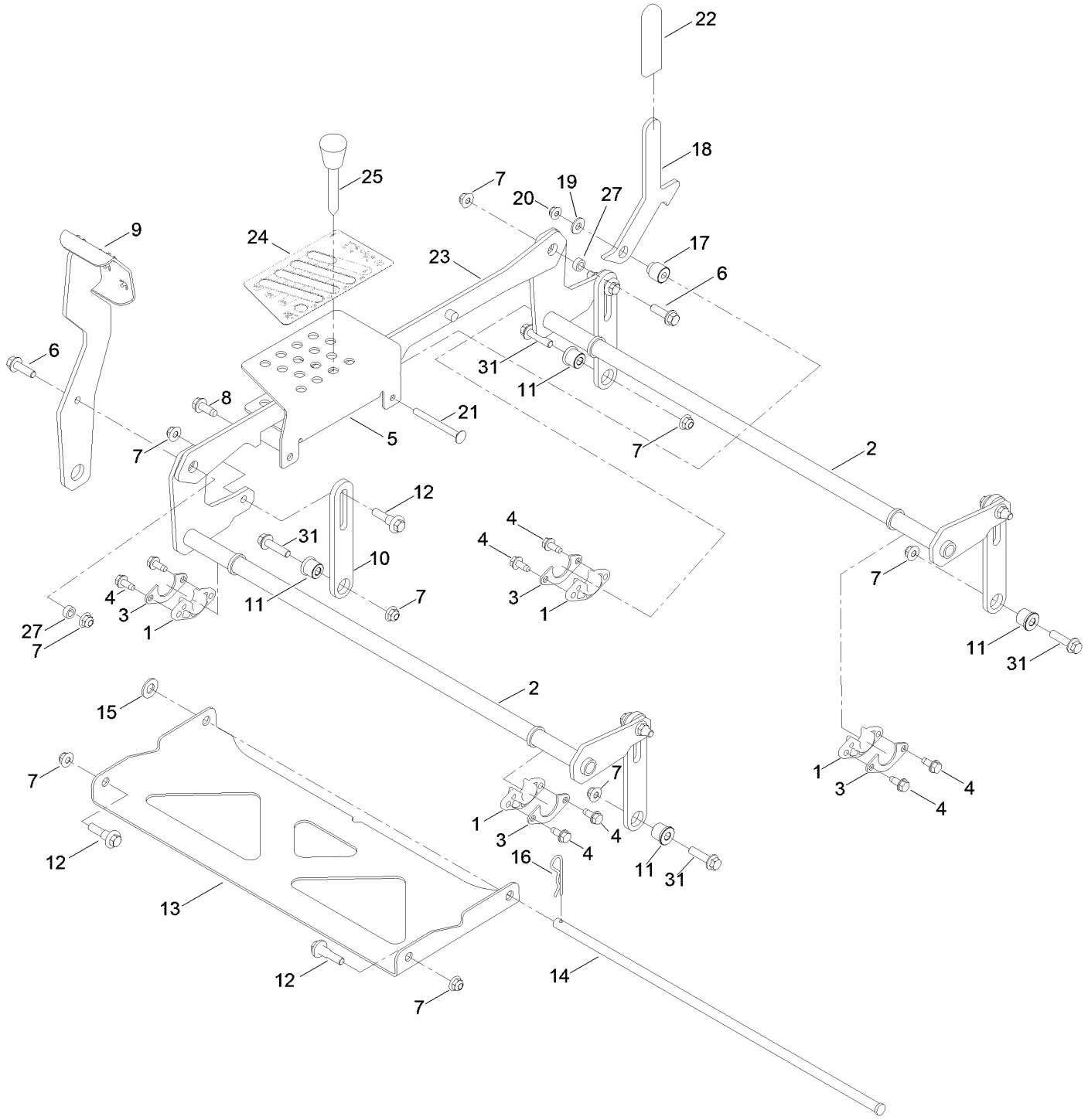

# Deck Lift Assembly (continued)

| Ref. | Part Number | Qty. | Description |
|---|---|---|---|
| 1 | 139-5872 | 4 | Bearing-Flange |
| 2 | 161-4632-01 | 2 | Pivot ASM-Decklift [red] |
| 3 | 138-7204 | 4 | Gusset-Deck Lift |
| 4 | 32144-70 | 8 | Screw-HWHTF |
| 5 | 163-5960-01 | 1 | Bracket-HOC [red] |
| 6 | 119-4061 | 2 | Screw-HHF |
| 7 | 119-4042 | 12 | Nut-HF, NI |
| 8 | 139-2428 | 1 | Screw-HWH |
| 9 | 145-6278-01 | 1 | Pedal ASM [red] |
| 10 | 163-2370-01 | 4 | Link-HOC |
| 11 | 161-9819 | 4 | Bushing-Deck Lift |
| 12 | 130-0742 | 6 | Bolt-Shoulder |
| 13 | 145-6248-03 | 1 | Pan-Deck Pivot |
| 14 | 145-6288 | 1 | Pin-Deck |
| 15 | 139-2611 | 1 | Washer-Flat |
| 16 | 139-2562 | 1 | Pin-Hair |
| 17 | 145-6282 | 1 | Spacer-Stepped |
| 18 | 145-6279 | 1 | Plate-Transport Lock |
| 19 | 137-3082 | 1 | Washer-Plain |
| 20 | 119-4041 | 1 | Nut-HF |
| 21 | 138-0741 | 1 | Screw-CARR |
| 22 | 140-0413 | 1 | Grip-Handle |
| 23 | 145-6262-01 | 1 | Link ASM-HOC [red] |
| 24 | 147-2867 | 1 | Decal-HOC |
| 25 | 140-2146 | 1 | HOC Pin ASM |
| 27 | 140-2093 | 2 | Spacer |
| 31 | 139-2553 | 4 | Screw-HHF |

# Caster Fork and Wheel Assembly

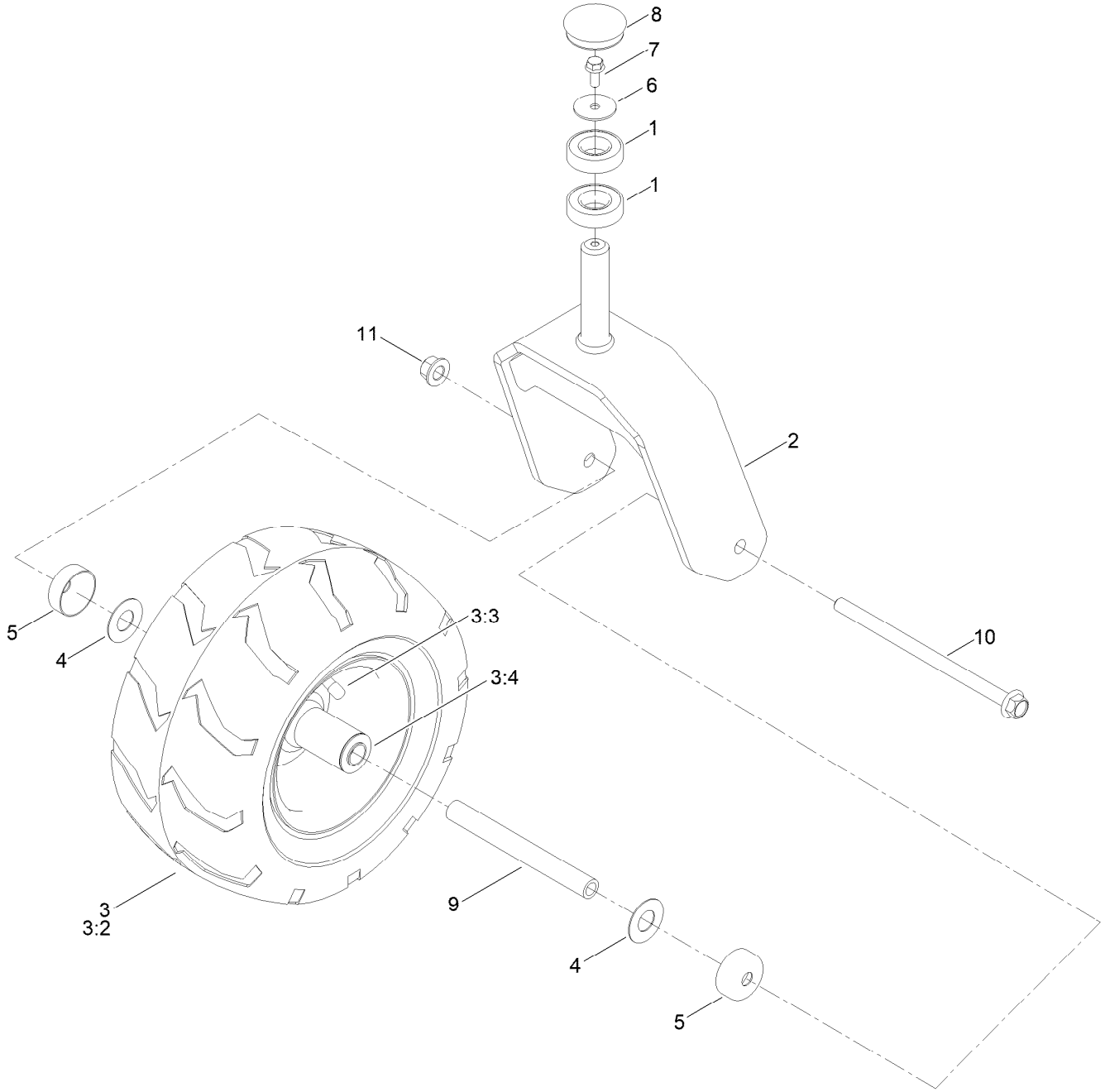

# Caster Fork and Wheel Assembly (continued)

| Ref. | Part Number | Qty. | Description |
|---|---|---|---|
| 1 | 109-3678 | 4 | Bearing-Ball |
| 2 | 145-6375-01 | 2 | Castor Fork [red] |
| 3 | 147-7647 | 2 | Tire And Wheel ASM |
| 3:2 | 147-7648 | 1 | Tire 13X6.5-6, Treaded |
| 3:3 | 232-27 | 1 | Stem-Valve |
| 3:4 | 147-7652 | 2 | Bearing |
| 4 | 136-5590 | 4 | Washer |
| 5 | 138-7208 | 4 | Guard-Seal |
| 6 | 115-1151 | 2 | Washer-Flat |
| 7 | 100-1668 | 2 | Screw-HHF |
| 8 | 144-0375 | 2 | Cap-Grease |
| 9 | 133-4487 | 2 | Spanner-Wheel |
| 10 | 147-2939 | 2 | Screw-HHF |
| 11 | 139-1689 | 2 | Nut-HF |

# Hydraulic Drive Assembly

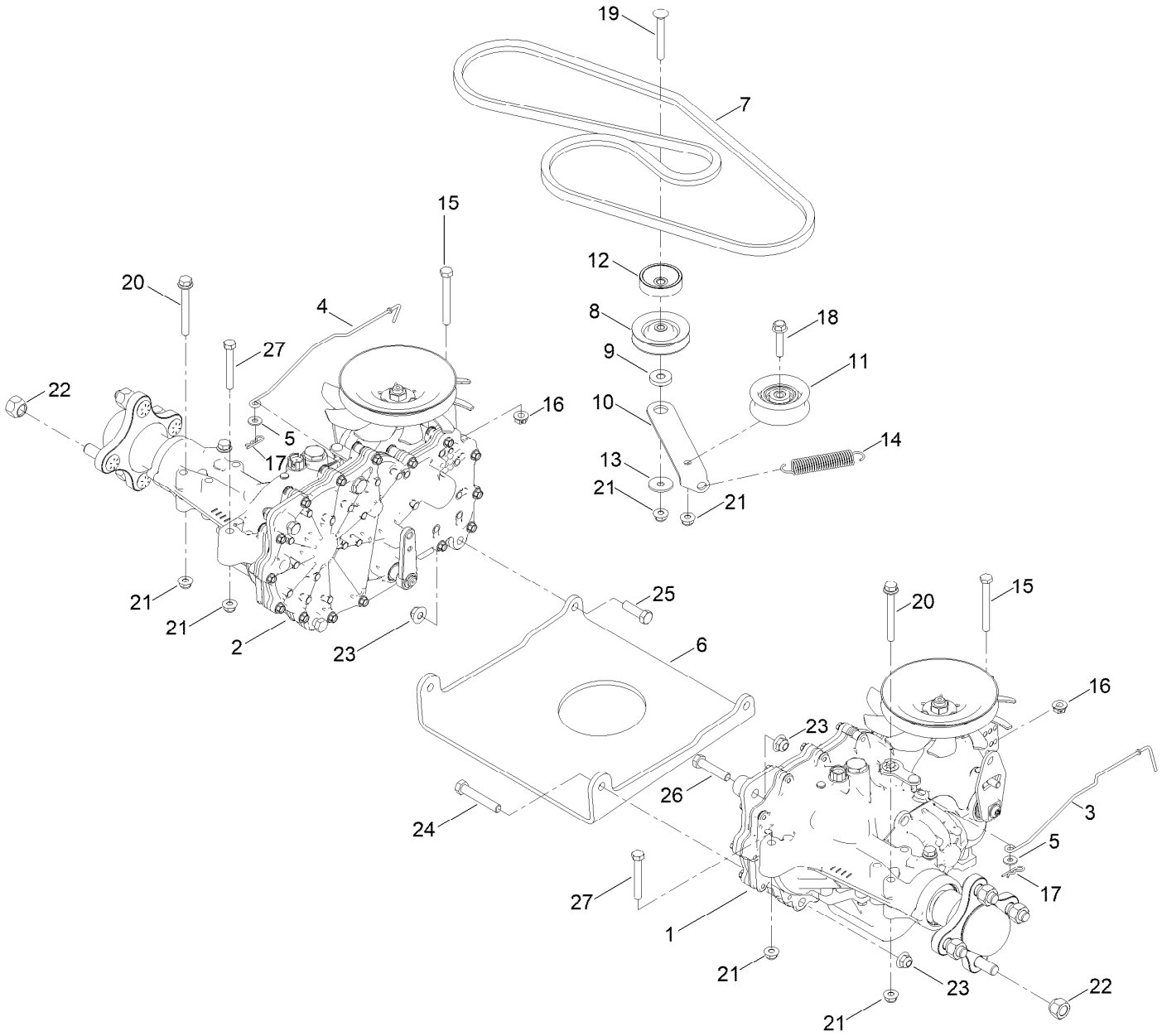

# Hydraulic Drive Assembly (continued)

| Ref. | Part Number | Qty. | Description |
|---|---|---|---|
| 1 | 147-2860 | 1 | LH Hydro Transmission ASM |
| 2 | 147-2861 | 1 | RH Hydro Transmission ASM |
| 3 | 147-2987 | 1 | Rod-Bypass, LH |
| 4 | 147-2986 | 1 | Rod-Bypass, RH |
| 5 | 119-8952 | 2 | Washer-Spcl |
| 6 | 161-9754-03 | 1 | Plate-Hydro |
| 7 | 145-6363 | 1 | V-Belt (A Sec 66.30 El) |
| 8 | 68-0030 | 1 | Idler |
| 9 | 138-7277 | 1 | Spacer-Arm, Idler |
| 10 | 147-2925 | 1 | Arm-Idler |
| 11 | 138-7597 | 1 | Pulley-Idler, Flat |
| 12 | 138-9809 | 1 | Spacer |
| 13 | 5-4460 | 1 | Washer-Pivot |
| 14 | 137-7040 | 1 | Spring-Return, Pedal |
| 15 | 145-6388 | 2 | Screw-HH Spcl |
| 16 | 139-2574 | 2 | Nut-HF |
| 17 | 3290-307 | 2 | Pin-Cotter |
| 18 | 115-1794 | 1 | Screw-HHF |
| 19 | 3230-8 | 1 | Screw-CARR |
| 20 | 138-7590 | 4 | Screw-HHF |
| 21 | 119-4041 | 8 | Nut-HF |
| 22 | 139-2564 | 8 | Nut-Lug |
| 23 | 119-4042 | 6 | Nut-HF, NI |
| 24 | 323-11 | 2 | Screw-HH |
| 25 | 323-7 | 2 | Screw-HH |
| 26 | 323-9 | 2 | Screw-HH |
| 27 | 322-11 | 2 | Screw-HH |

# LH Hydro Transmission Assembly No. 147-2860

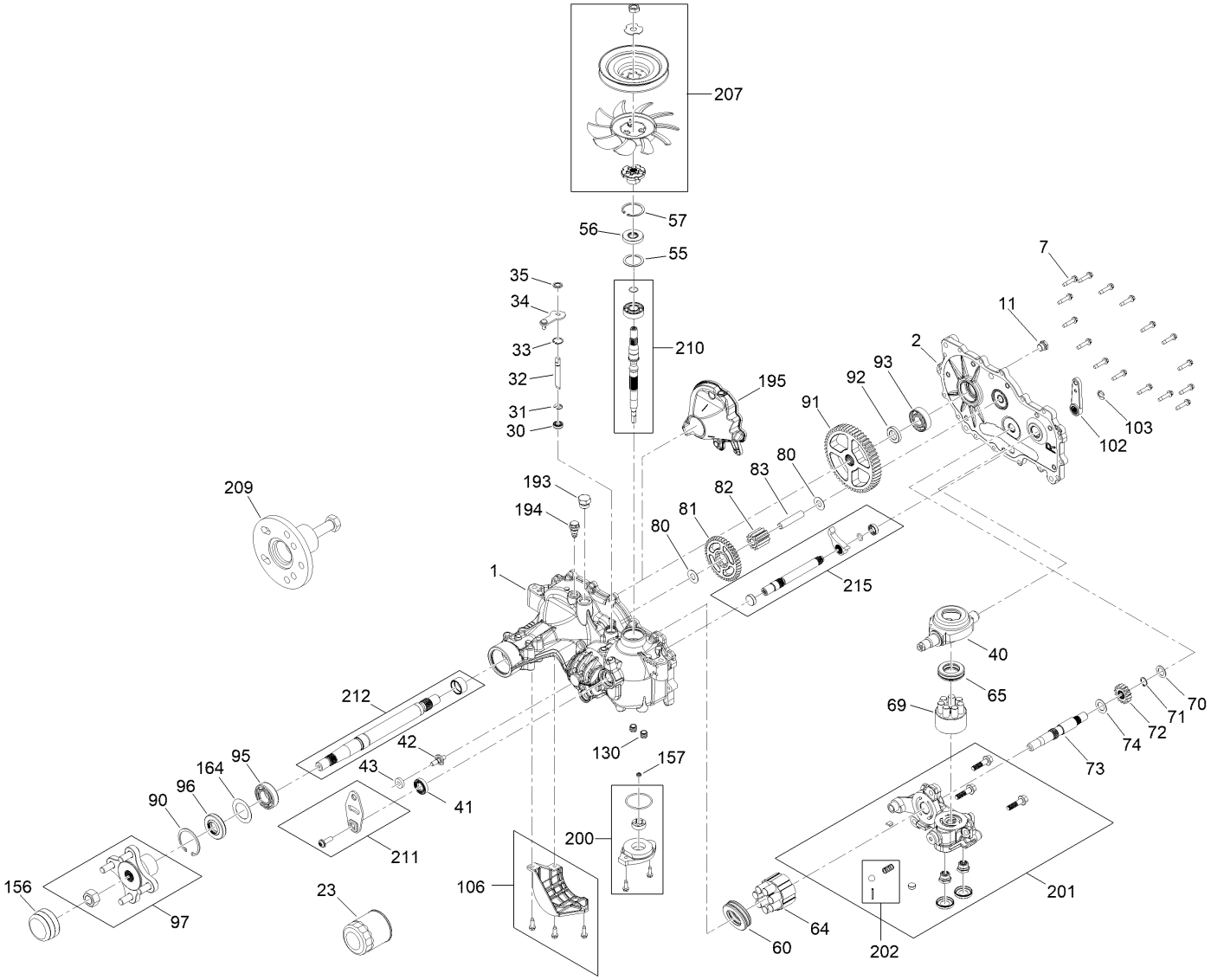

# LH Hydro Transmission Assembly No. 147-2860 (continued)

| Ref. | Part Number | Qty. | Description |
|---|---|---|---|
| 1 | 140-8345 | 1 | RH Main Housing Kit |
| 2 | 140-8349 | 1 | RH Side Cover Kit |
| 7 | 117-5359 | 16 | Screw-HHF |
| 11 | 135-1140 | 1 | Plug-Straight |
| 23 | 109-3321 | 1 | Element-Oil Filter, HYD |
| 30 | 139-7497 | 1 | Seal-Lip |
| 31 | 106-8677 | 1 | Ring-Retaining, External |
| 32 | 114-1685 | 1 | Rod-Bypass |
| 33 | 106-8679 | 1 | Ring-Retaining, Internal |
| 34 | 112-9852 | 1 | Arm-Bypass |
| 35 | 106-8681 | 1 | Ring-Retaining, External |
| 40 | 104-5304 | 1 | Swashplate-Trunnion |
| 41 | 104-5313 | 1 | Seal-Lip |
| 42 | 104-2116 | 1 | Stud |
| 43 | 112-9853 | 1 | Puck-Friction |
| 55 | 104-5308 | 1 | Spacer |
| 56 | 104-5310 | 1 | Seal-Lip |
| 57 | 104-5309 | 1 | Ring-Retaining |
| 60 | 112-4154 | 1 | Bearing-Thrust |
| 64 | 139-4074 | 1 | Cylinder Block ASM Kit |
| 65 | 94-6922 | 1 | Bearing-Thrust |
| 69 | 110-8561 | 1 | Pump Block ASM |
| 70 | 104-5339 | 1 | Washer-Flat |
| 71 | 104-5340 | 1 | Ring-Retaining |
| 72 | 114-1690 | 1 | Gear-14T |
| 73 | 114-1691 | 1 | Shaft-Motor |
| 74 | 104-5360 | 1 | Washer |
| 80 | 94-1933 | 2 | Washer |
| 81 | 114-1692 | 1 | Gear-45T |
| 82 | 114-1693 | 1 | Gear-11T |
| 83 | 104-5329 | 1 | Pin-Jackshaft |
| 90 | 104-2169 | 1 | Ring-Retaining |
| 91 | 114-1694 | 1 | Gear-54T |
| 92 | 120-7975 | 1 | Spacer |
| 93 | 135-1361 | 1 | Bearing-Ball |
| 95 | 130-8477 | 1 | Bearing-Ball |
| 96 | 104-2144 | 1 | Seal |
| 97 | 109-5939 | 1 | Hub Kit |
| 102 | 125-0021 | 1 | Handle-Brake |
| 103 | 131-0906 | 1 | Ring-Retaining, EXT |
| 106 | 139-7499 | 1 | Filter Guard Kit |
| 130 | 126-3251 | 2 | Tube-Charge |
| 156 | 115-5057 | 1 | Cover-Nut, Axle |
| 157 | 126-1930 | 1 | Gerotor Seal Kit |
| 164 | 121-5745 | 1 | Spacer |
| 193 | 140-8343 | 1 | Plug |
| 194 | 140-8356 | 1 | Breather Fitting ASM |
| 195 | 140-8357 | 1 | RH Internal Expansion Tank ASM |
| 200 | 140-8351 | 1 | Seal Kit |
| 201 | 147-2906 | 1 | Kit, Center Section, LH Charge |
| 202 | 114-8464 | 1 | Charge Relief Kit |
| 203 | 114-8465 | 1 | Charge Kit ● |
| 207 | 135-7343 | 1 | Fan And Pulley Kit |
| 209 | 114-8467 | 1 | Puller-Hub, 4 Bolt |
| 210 | 139-7502 | 1 | Input Shaft Kit |
| 211 | 117-5362 | 1 | Control Arm Kit |
| 212 | 114-8470 | 1 | Axle Shaft Kit |
| 215 | 140-8352 | 1 | Inboard Kit |

● Not illustrated

# RH Hydro Transmission Assembly No. 147-2861

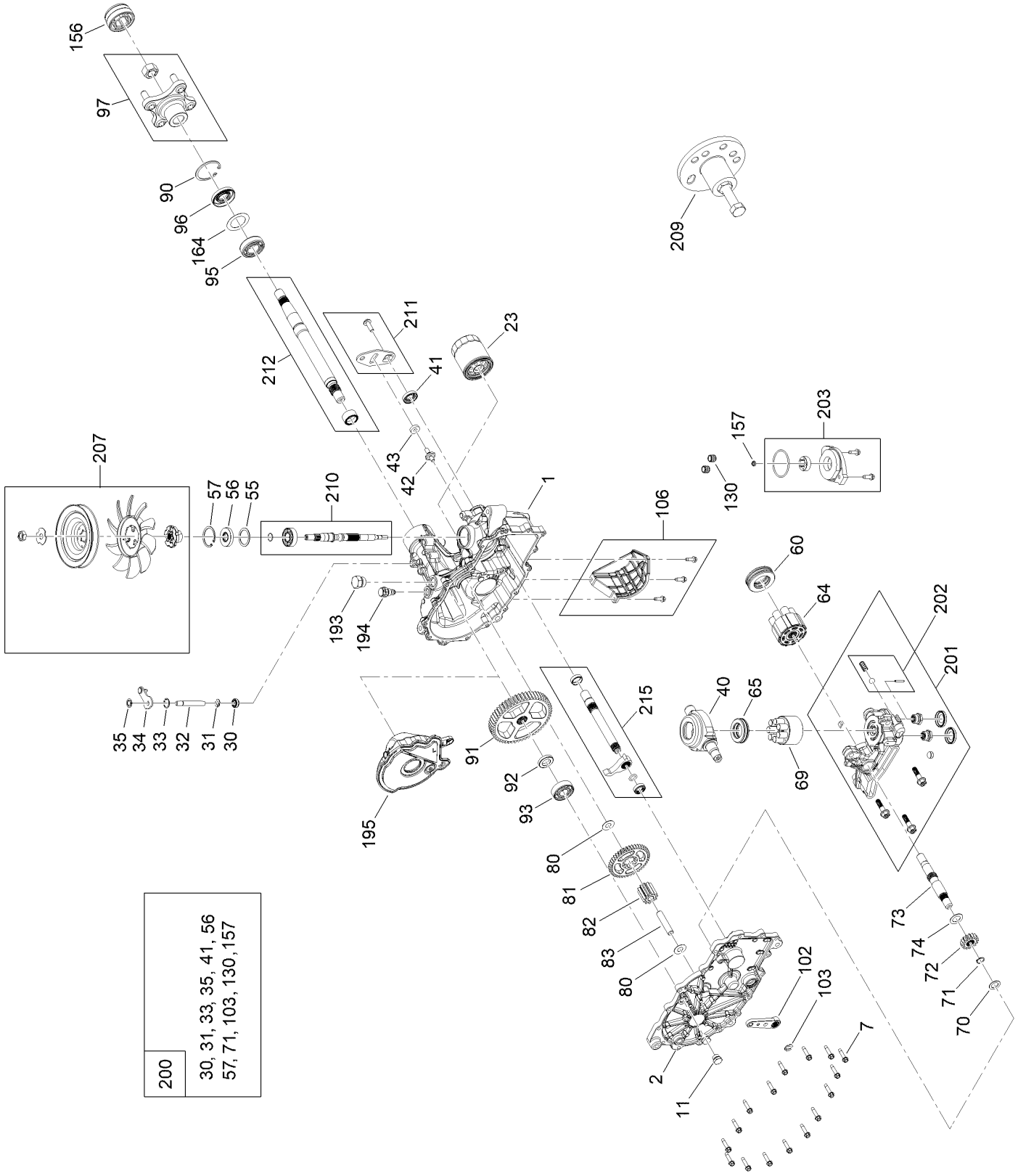

# RH Hydro Transmission Assembly No. 147-2861 (continued)

| Ref. | Part Number | Qty. | Description |
|---|---|---|---|
| 1 | 140-8347 | 1 | LH Main Housing Kit |
| 2 | 140-8350 | 1 | LH Side Cover Kit |
| 7 | 117-5359 | 16 | Screw-HHF |
| 11 | 135-1140 | 1 | Plug-Straight |
| 23 | 109-3321 | 1 | Element-Oil Filter, HYD |
| 30 | 139-7497 | 1 | Seal-Lip |
| 31 | 106-8677 | 1 | Ring-Retaining, External |
| 32 | 114-1685 | 1 | Rod-Bypass |
| 33 | 106-8679 | 1 | Ring-Retaining, Internal |
| 34 | 107-2490 | 1 | Arm-Bypass |
| 35 | 106-8681 | 1 | Ring-Retaining, External |
| 40 | 104-5304 | 1 | Swashplate-Trunnion |
| 41 | 104-5313 | 1 | Seal-Lip |
| 42 | 104-2116 | 1 | Stud |
| 43 | 112-9853 | 1 | Puck-Friction |
| 55 | 104-5308 | 1 | Spacer |
| 56 | 104-5310 | 1 | Seal-Lip |
| 57 | 104-5309 | 1 | Ring-Retaining |
| 60 | 112-4154 | 1 | Bearing-Thrust |
| 64 | 139-4074 | 1 | Cylinder Block ASM Kit |
| 65 | 94-6922 | 1 | Bearing-Thrust |
| 69 | 110-8561 | 1 | Pump Block ASM |
| 70 | 104-5339 | 1 | Washer-Flat |
| 71 | 104-5340 | 1 | Ring-Retaining |
| 72 | 114-1690 | 1 | Gear-14T |
| 73 | 114-1691 | 1 | Shaft-Motor |
| 74 | 104-5360 | 1 | Washer |
| 80 | 94-1933 | 2 | Washer |
| 81 | 114-1692 | 1 | Gear-45T |
| 82 | 114-1693 | 1 | Gear-11T |
| 83 | 104-5329 | 1 | Pin-Jackshaft |
| 90 | 104-2169 | 1 | Ring-Retaining |
| 91 | 114-1694 | 1 | Gear-54T |
| 92 | 120-7975 | 1 | Spacer |
| 93 | 135-1361 | 1 | Bearing-Ball |
| 95 | 130-8477 | 1 | Bearing-Ball |
| 96 | 104-2144 | 1 | Seal |
| 97 | 109-5939 | 1 | Hub Kit |
| 102 | 125-0021 | 1 | Handle-Brake |
| 103 | 131-0906 | 1 | Ring-Retaining, EXT |
| 106 | 139-7498 | 1 | Filter Guard Kit |
| 130 | 126-3251 | 2 | Tube-Charge |
| 156 | 115-5057 | 1 | Cover-Nut, Axle |
| 157 | 126-1930 | 1 | Gerotor Seal Kit |
| 164 | 121-5745 | 1 | Spacer |
| 193 | 140-8343 | 1 | Plug |
| 194 | 140-8356 | 1 | Breather Fitting ASM |
| 195 | 140-8358 | 1 | LH Internal Expansion Tank ASM |
| 200 | 140-8351 | 1 | Seal Kit |
| 201 | 147-2907 | 1 | Kit, Center Section, RH Charge |
| 202 | 114-8464 | 1 | Charge Relief Kit |
| 203 | 114-8465 | 1 | Charge Kit |
| 207 | 135-7343 | 1 | Fan And Pulley Kit |
| 209 | 114-8467 | 1 | Puller-Hub, 4 Bolt |
| 210 | 139-7502 | 1 | Input Shaft Kit |
| 211 | 117-5362 | 1 | Control Arm Kit |
| 212 | 114-8470 | 1 | Axle Shaft Kit |
| 215 | 140-8353 | 1 | Inboard Kit |

# Fan and Pulley Kit Assembly No. 135-7343

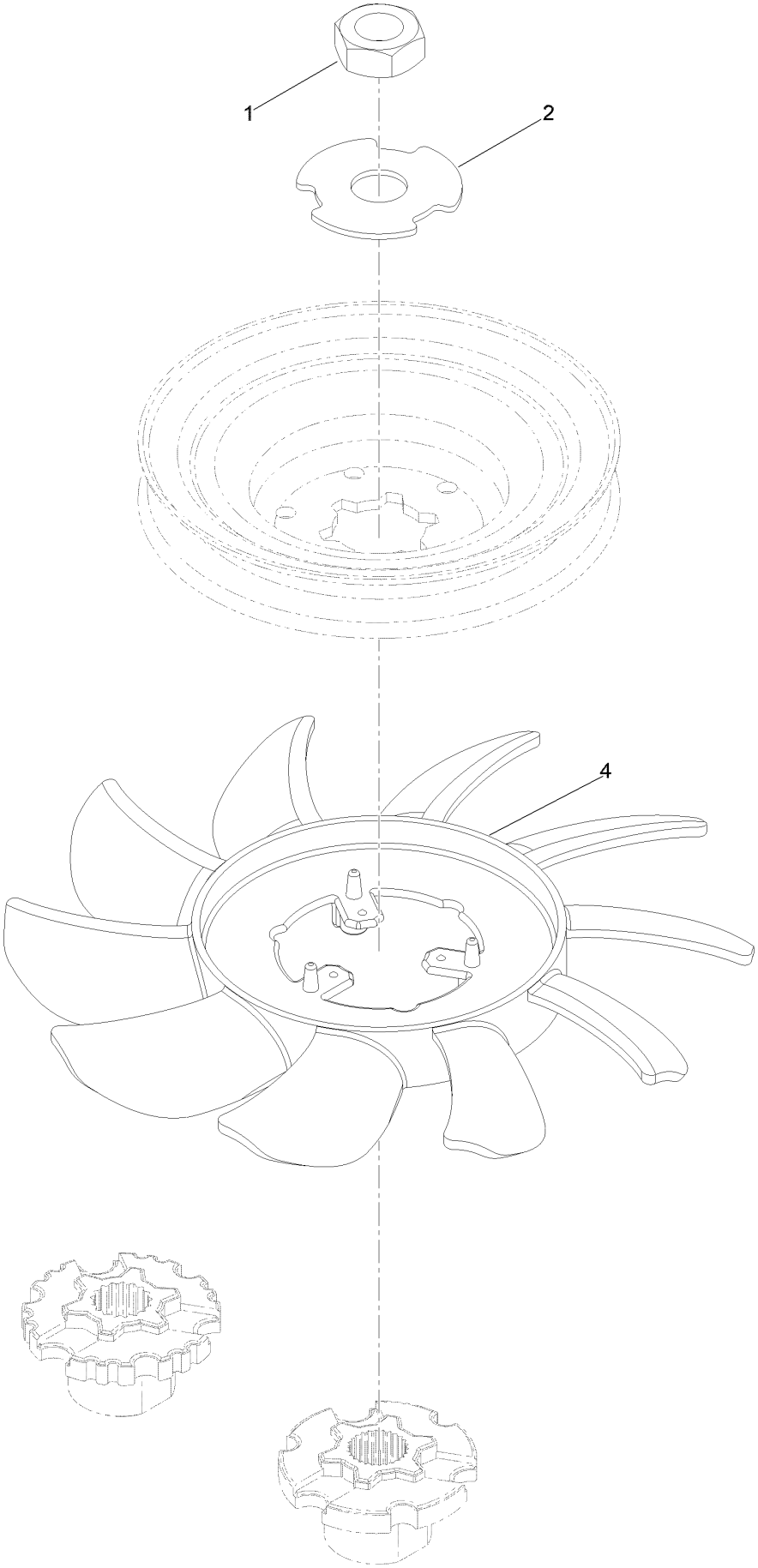

# Fan and Pulley Kit Assembly No. 135-7343 (continued)

| *Ref.* | *Part Number* | *Qty.* | *Description* |
|---|---|---|---|
| 1 | 116-9714 | 1 | Nut-HJ |
| 2 | 116-9708 | 1 | Washer-Slotted |
| 4 | 135-7364 | 1 | Fan 7.0 X 10 Blade |

# Parking Brake Assembly

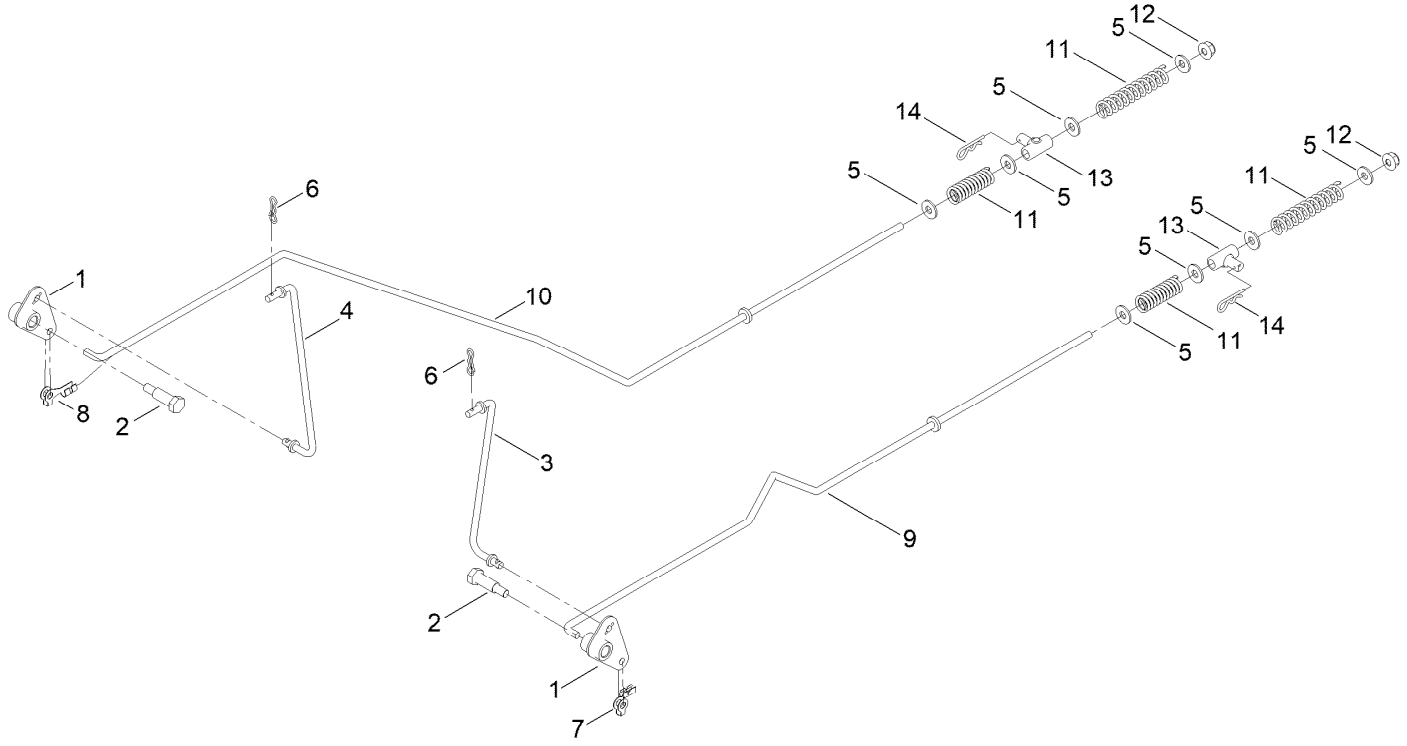

# Parking Brake Assembly (continued)

| Ref. | Part Number | Qty. | Description |
|---|---|---|---|
| 1 | 161-6420 | 2 | Bellcrank |
| 2 | 145-6364 | 2 | Bolt-Shoulder |
| 3 | 145-4607 | 1 | Link-Brake, LH |
| 4 | 145-6238 | 1 | Link-Brake, RH |
| 5 | 119-8952 | 8 | Washer-Spcl |
| 6 | 119-1414 | 2 | Pin-Cotter, Locking |
| 7 | 144-1816 | 1 | Clip-Rod, LH (7L, 1/4In) |
| 8 | 144-1815 | 1 | Clip-Rod, RH (7R, 1/4In) |
| 9 | 145-0408 | 1 | Rod-Brake LH |
| 10 | 145-0407 | 1 | Rod-Brake, RH |
| 11 | 138-7252 | 4 | Spring-Compression |
| 12 | 119-4040 | 2 | Nut-HF, NI |
| 13 | 161-6635 | 2 | Mount-Pivot |
| 14 | 137-3083 | 2 | Pin-Hair |

# Rear Wheel Assembly

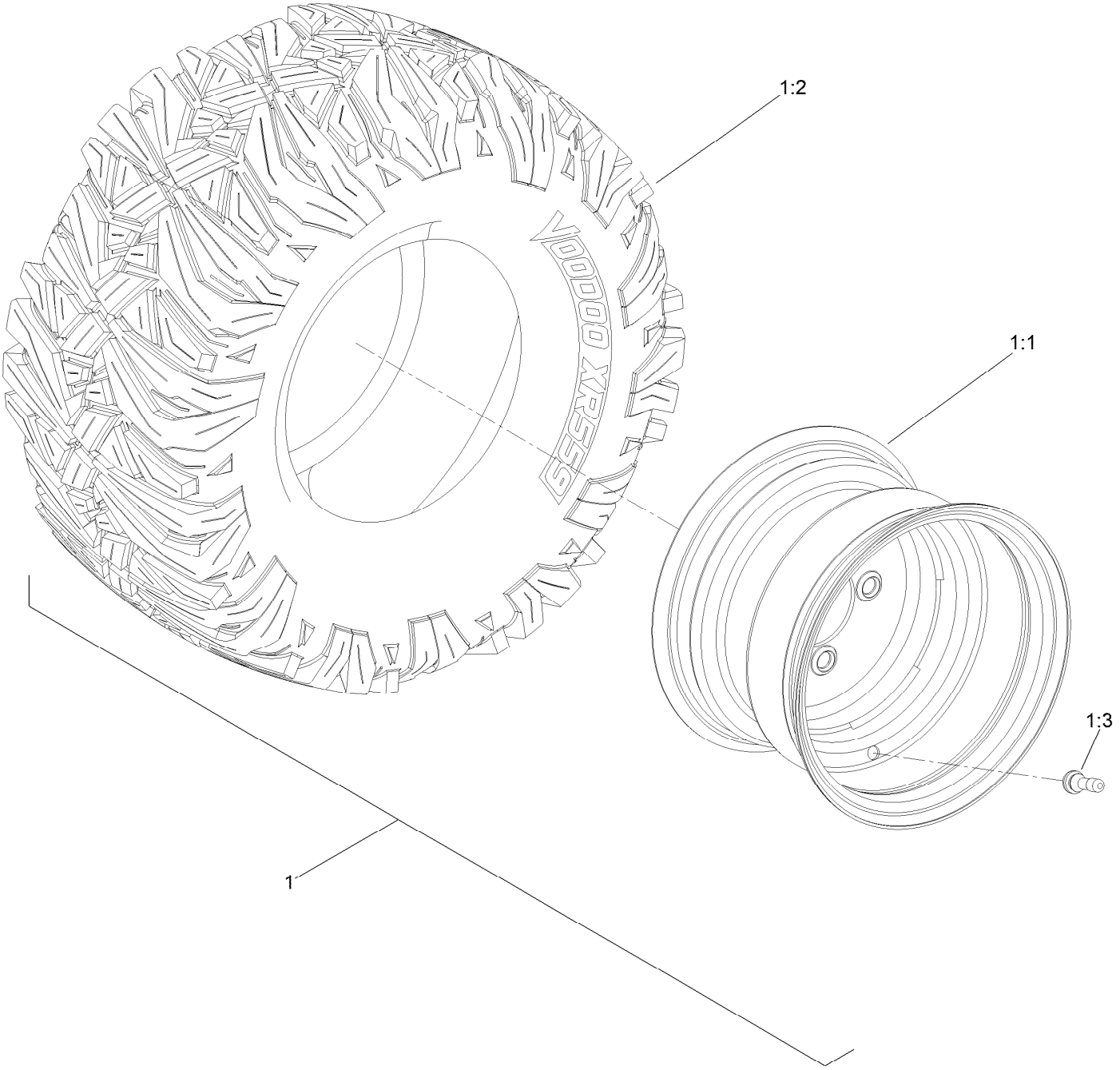

# Rear Wheel Assembly (continued)

| Ref. | Part Number | Qty. | Description |
|---|---|---|---|
| 1 | 145-6393 | 2 | Tire ASM-22X11-10 Nos2.4 |
| 1:1 | 147-5178 | 1 | Rim |
| 1:2 | 147-5177 | 1 | Tire |
| 1:3 | 232-27 | 1 | Stem-Valve |

# Motion Control Assembly

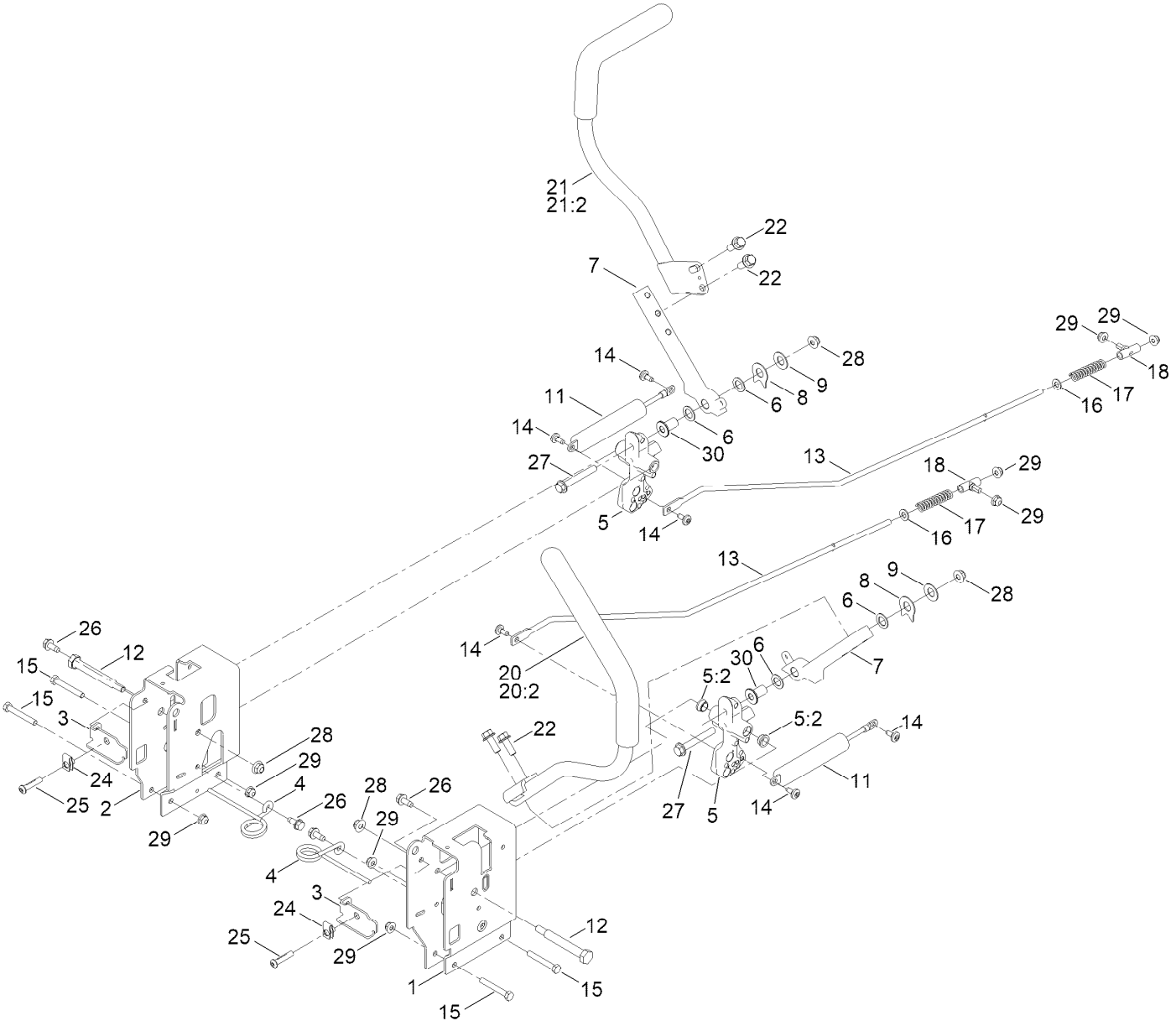

# Motion Control Assembly (continued)

| Ref. | Part Number | Qty. | Description |
|---|---|---|---|
| 1 | 163-5941-03 | 1 | Control Box - LH |
| 2 | 163-5942-03 | 1 | Control Box - RH |
| 3 | 163-3189 | 2 | Adjustment Plate-Control Box |
| 4 | 145-6253 | 2 | Spring-Torsion |
| 5 | 164-3311 | 2 | Pivot Arm ASM |
| 5:2 | 163-3186 | 2 | Bushing-Flange |
| 6 | 163-7396 | 4 | Washer-Friction |
| 7 | 163-3142-05 | 2 | Arm-Control |
| 8 | 142-8478 | 2 | Spacer, Anti-Rotation |
| 9 | 119-8925 | 2 | Washer-Belleville |
| 11 | 161-6514 | 2 | Damper-Non Cavitating |
| 12 | 115-5099 | 2 | Bolt-Pivot |
| 13 | 161-9725 | 2 | Rod-Hydro |
| 14 | 120-7950 | 6 | Screw-Torx |
| 15 | 322-11 | 4 | Screw-HH |
| 16 | 120-9683 | 2 | Washer-Plain |
| 17 | 138-7252 | 2 | Spring-Compression |
| 18 | 138-7218 | 2 | Mount-Rod, Hydro |
| 20 | 164-0262 | 1 | Handle-ASM LH W/Grip |
| 20:2 | 147-3029 | 1 | Grip |
| 21 | 164-0263 | 1 | Handle-ASM RH W/Grip |
| 21:2 | 147-3029 | 1 | Grip |
| 22 | 110-5052 | 4 | Screw-HHF |
| 24 | 112-3306 | 2 | Nut |
| 25 | 126-4299 | 2 | Screw-HSBH |
| 26 | 32144-70 | 4 | Screw-HWHTF |
| 27 | 133-9682 | 2 | Screw-Hfh |
| 28 | 119-4042 | 4 | Nut-HF, NI |
| 29 | 119-4041 | 8 | Nut-HF |
| 30 | 163-2335 | 2 | Spacer-Pivot |

# Engine and Muffler Assembly

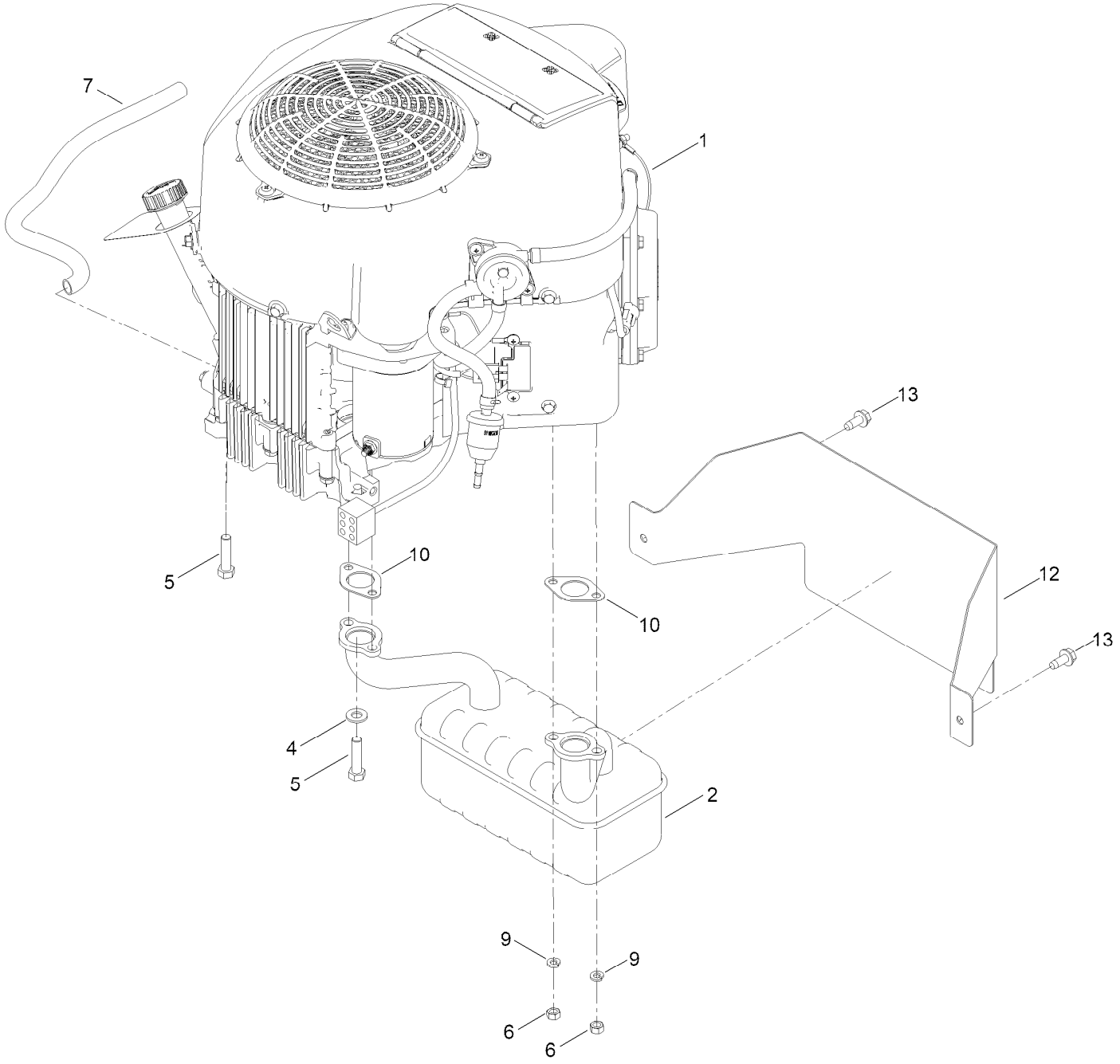

# Engine and Muffler Assembly (continued)

| Ref. | Part Number | Qty. | Description |
|---|---|---|---|
| 1 | | 1 | Engine-Kawasaki Fr691 ■▲ |
| 1:1 | 119-5852 | 1 | Filter-Oil ● |
| 1:2 | 142-6949 | 1 | Filter-Fuel ● |
| 1:3 | 92-2153 | 2 | Plug-Spark ● |
| 1:4 | 120-7448 | 1 | Filter-Air, Paper ● |
| 2 | 139-5867 | 1 | Muffler |
| 4 | 3256-24 | 3 | Washer-Plain |
| 5 | 323-50 | 4 | Bolt-HH |
| 6 | 114-3549 | 4 | Nut |
| 7 | 106-7022 | 1 | Tube-Drain, Oil |
| 9 | 114-3550 | 4 | Washer-Lock |
| 10 | 1-653313 | 2 | Gasket-Exhaust |
| 12 | 161-6649-03 | 1 | Heat Shield - Muffler |
| 13 | 32144-70 | 2 | Screw-HWHTF |

● Not illustrated
▲ Obtain parts from www.kawpower.com
■ Not serviced separately

# Fuel System Assembly

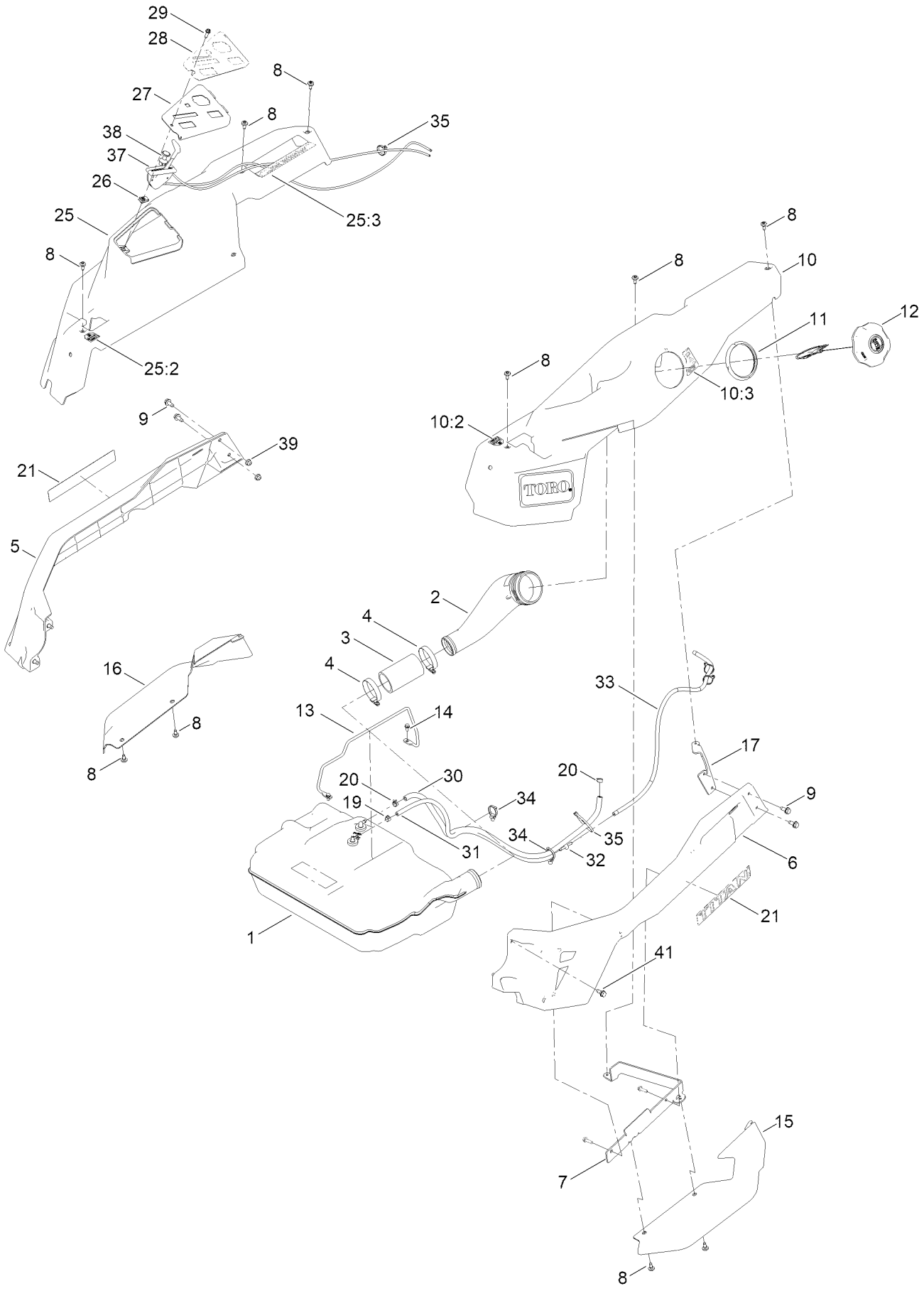

# Fuel System Assembly (continued)

| Ref. | Part Number | Qty. | Description |
|---|---|---|---|
| 1 | 161-6588 | 1 | Fuel Tank ASM |
| 2 | 147-2852 | 1 | Neck-Filler, Fuel |
| 3 | 145-4698 | 1 | Hose-Filler, Fuel |
| 4 | 2412-130 | 2 | Clamp-Hose |
| 5 | 147-2973-05 | 1 | Cast-Tube, RH [blk-Txt] |
| 6 | 147-2972-05 | 1 | Cast-Tube, LH [blk-Txt] |
| 7 | 147-2974-03 | 1 | Mount-Pod Bracket LH |
| 8 | 120-7950 | 10 | Screw-Torx |
| 9 | 32144-70 | 8 | Screw-HWHTF |
| 10 | 147-8741 | 1 | Pod ASM - LH W/Decals |
| 10:2 | 139-2395 | 1 | Decal-Control Lever, LH |
| 10:3 | 147-2399 | 1 | Decal-Fuel Fill |
| 11 | 147-7712 | 1 | Ring-Retaining |
| 12 | 163-5914 | 1 | Cap Fuel, Ratcheting |
| 13 | 147-5176 | 1 | Rod-Hold Down |
| 14 | 32144-4 | 2 | Screw-HWH |
| 15 | 147-2978 | 1 | Fender-Time Cutter, LH |
| 16 | 147-2979 | 1 | Fender-Time Cutter, RH |
| 17 | 147-2976-03 | 1 | Bracket-Rear Pod, LH |
| 19 | 2412-80 | 1 | Clamp-Hose |

| Ref. | Part Number | Qty. | Description |
|---|---|---|---|
| 20 | 2412-98 | 2 | Clamp-Hose |
| 21 | 164-6914 | 2 | Decal-Titan |
| 25 | 147-8744 | 1 | Pod ASM - RH , Mr W/Decals |
| 25:2 | 139-2394 | 1 | Decal-Control Lever, RH |
| 25:3 | 147-7574 | 1 | Decal - Myride |
| 26 | 107069 | 1 | Clip |
| 27 | 147-2990-03 | 1 | Panel-Control |
| 28 | 147-7571 | 1 | Decal - Control Panel |
| 29 | 49-2040 | 1 | Screw-HWHTF |
| 30 | 109-0284 | 1 | Hose-Fuel |
| 31 | 121-0780 | 1 | Hose-Fuel |
| 32 | 144-1983 | 1 | Adapter Orifice |
| 33 | 108-6344 | 1 | Hose-Fuel |
| 34 | 32180-030 | 2 | Clip-Tie |
| 35 | 614249 | 4 | Tie-Cable |
| 37 | 147-7697 | 1 | Cable-Throttle |
| 38 | 147-2902 | 1 | Cable-Choke |
| 39 | 119-4041 | 2 | Nut-HF |
| 41 | 32144-41 | 4 | Screw-Taptite |

# Fuel Tank Assembly No. 161-6588

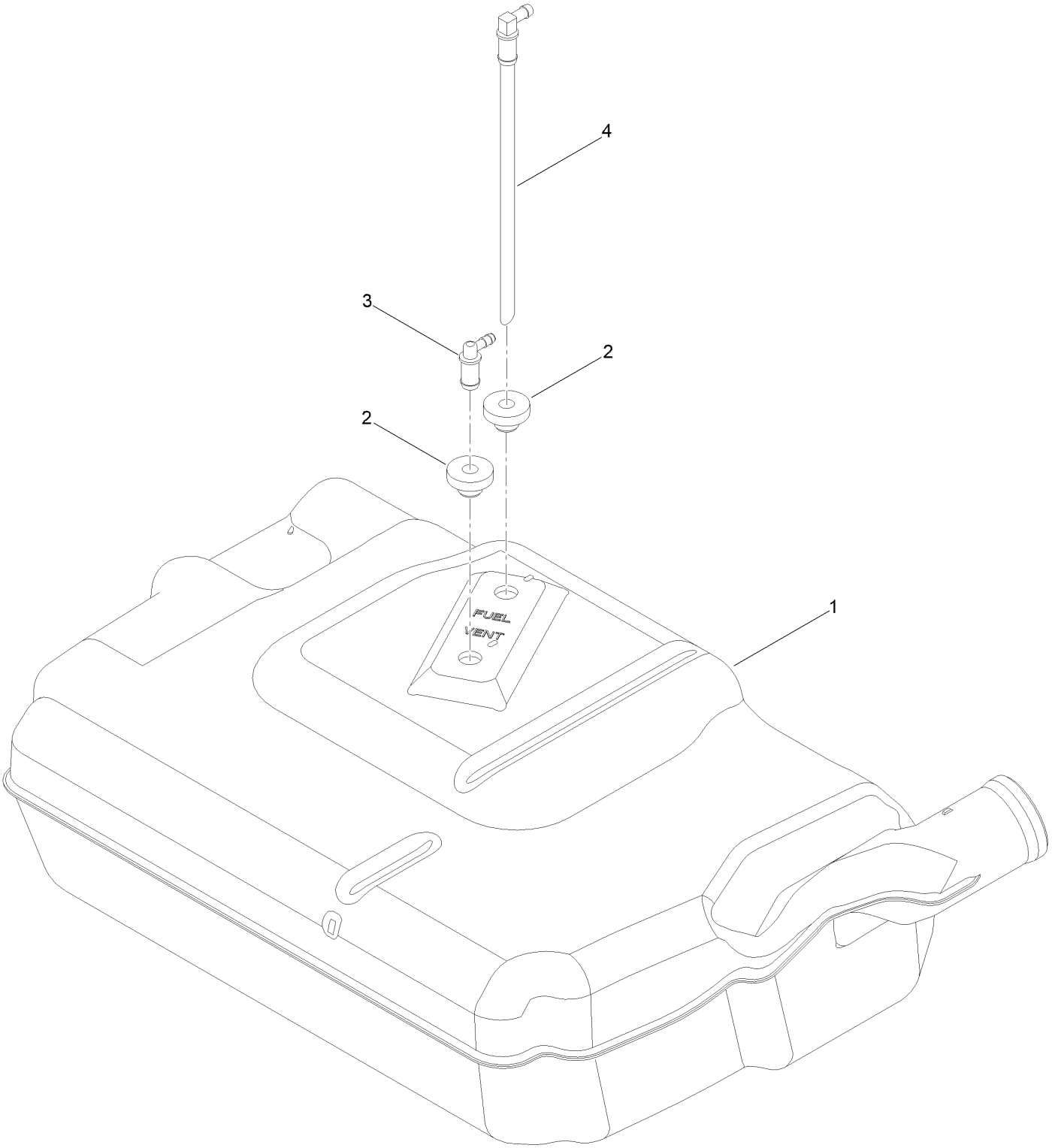

# Fuel Tank Assembly No. 161-6588 (continued)

| Ref. | Part Number | Qty. | Description |
|---|---|---|---|
| 1 | | 1 | Tank-Fuel ● |
| 2 | 46-6560 | 2 | Bushing |
| 3 | 161-6609 | 1 | Fitting-Elbow 90 |
| 4 | 147-2934 | 1 | Fitting-Pickup, Fuel |

● Not serviced separately

# Electrical Assembly

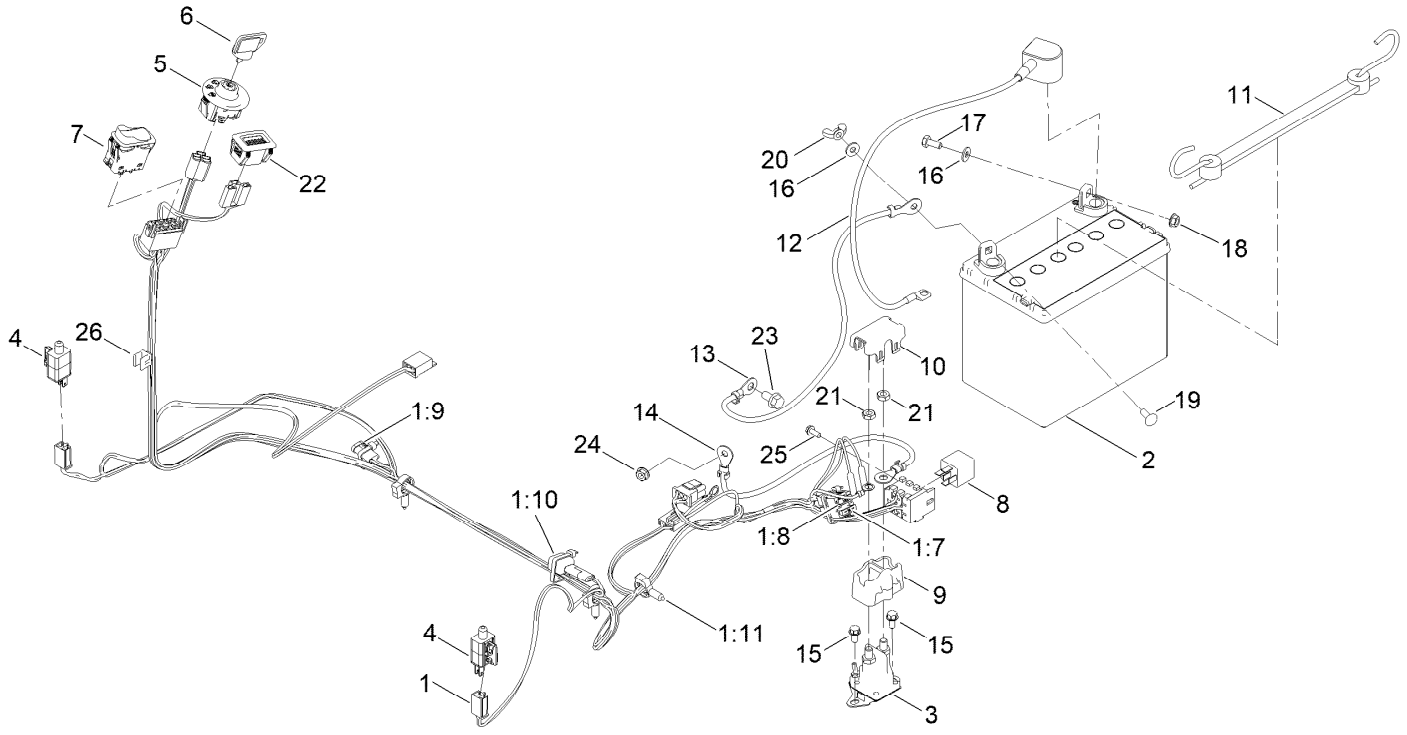

# Electrical Assembly (continued)

| Ref. | Part Number | Qty. | Description |
|---|---|---|---|
| 1 | 145-6382 | 1 | Harness-Wire, Main |
| 1:7 | 109355 | 1 | Fuse-Blade, 15 Amp |
| 1:8 | 109102 | 1 | Fuse-Blade, 25 Amp |
| 1:9 | 32160-029 | 1 | Connector-Molded, 1F,1M |
| 1:10 | 100-4918 | 1 | Diode |
| 1:11 | 32180-047 | 3 | Clip-Tubing, Harness |
| 2 | | 1 | Battery- Wet, 12V, 300 CCA ●■ |
| 3 | 117-1197 | 1 | Solenoid |
| 4 | 110-6765 | 2 | Switch |
| 5 | 137-4100 | 1 | Switch-Ignition |
| 6 | 63-8360 | 1 | Key-Ignition |
| 7 | 139-6368 | 1 | Switch-Rocker, On-None-On |
| 8 | 1-643275 | 1 | Relay |
| 9 | 140-2080 | 1 | Cover-Solenoid |
| 10 | 140-2081 | 1 | Cap-Solenoid |

| Ref. | Part Number | Qty. | Description |
|---|---|---|---|
| 11 | 104-2466 | 1 | Holddown-Battery |
| 12 | 147-2941 | 1 | Cable-Battery,Red |
| 13 | 119-8899 | 1 | Cable-Battery, Black |
| 14 | 121-0711 | 1 | Cable-Battery, Positive |
| 15 | 32144-4 | 2 | Screw-HWH |
| 16 | 119-8952 | 2 | Washer-Spcl |
| 17 | 137-3041 | 1 | Screw-HH |
| 18 | 139-2575 | 1 | Nut-HF |
| 19 | 137-3053 | 1 | Screw-CARR |
| 20 | 32103-22 | 1 | Nut-Wing |
| 21 | 139-2580 | 2 | Nut-HJ |
| 22 | 139-6404 | 1 | Hour Meter |
| 23 | 33104-016 | 1 | Screw-HHF |
| 24 | 32128-33 | 1 | Nut-HF |
| 25 | 139-1713 | 1 | Screw-Thd Roll |
| 26 | 32180-082 | 1 | Clip-Edge W/Tie, Perpendicular |

● Obtain locally.

■ Not serviced separately

# Deck Assembly

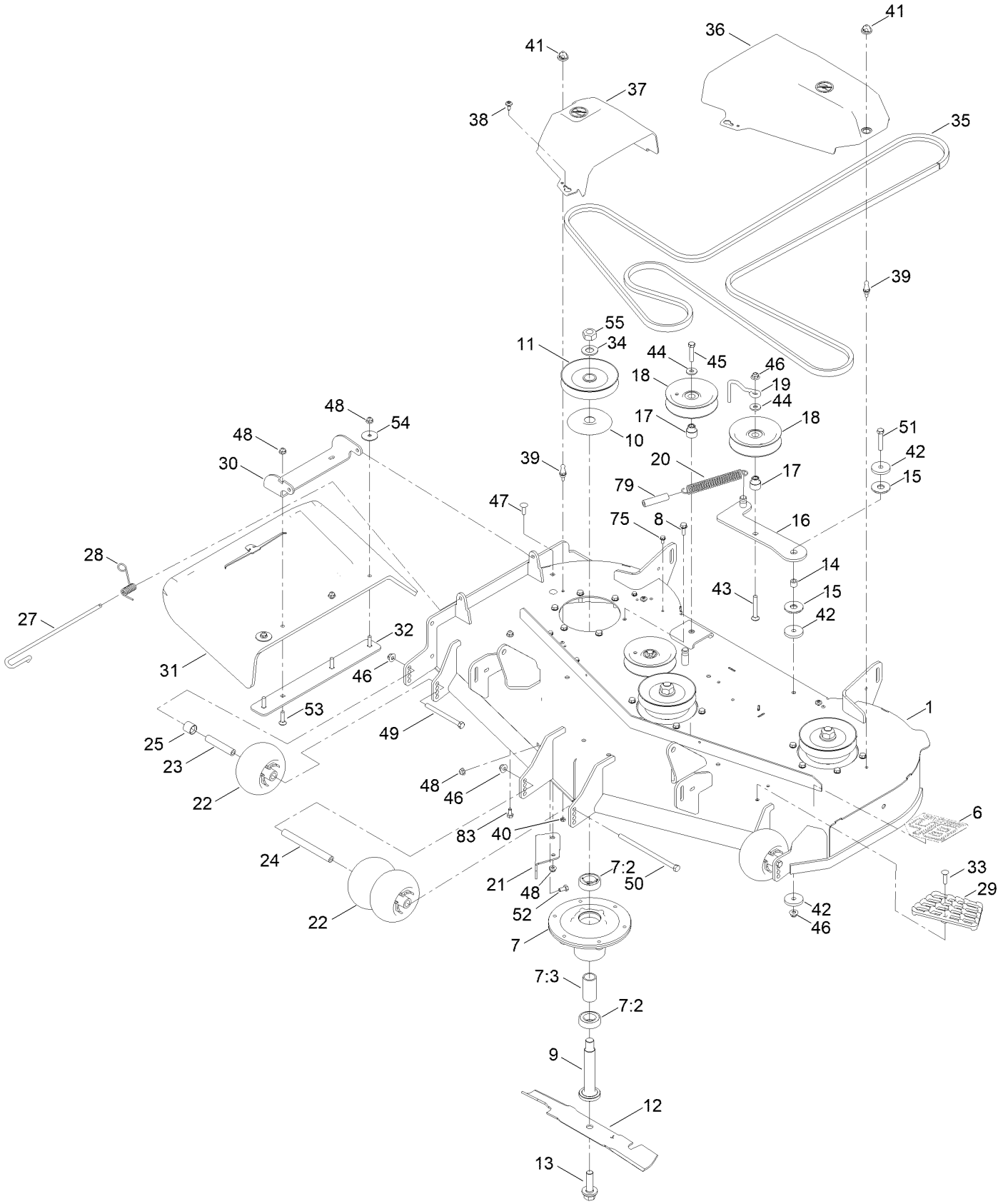

# Deck Assembly (continued)

| Ref. | Part Number | Qty. | Description |
|---|---|---|---|
| 1 | 147-8749 | 1 | 48 In Deck & Decal ASM |
| 6 | 147-7568 | 1 | Decal - Deck 48 |
| 7 | 139-2357 | 3 | Spindle ASM |
| 7:2 | 116-0720 | 2 | Bearing-Ball |
| 7:3 | 138-7220 | 1 | Spacer-Bearing |
| 8 | 32144-41 | 18 | Screw-Taptite |
| 9 | 115-2642 | 3 | Shaft-Spindle |
| 10 | 138-7221 | 3 | Shield-Bearing |
| 11 | 147-7673 | 3 | Pulley |
| 12 | 117-7277-03 | 3 | Blade-Hi Flo, 16.50 Inch |
| 13 | 145-0412 | 3 | Screw-Blade |
| 14 | 138-7225 | 1 | Spacer |
| 15 | 114-0463 | 2 | Washer-Friction, Composite |
| 16 | 145-7038 | 1 | Idler Arm ASM |
| 17 | 138-7227 | 3 | Bushing-Idler |
| 18 | 132-4718 | 3 | Pulley-Idler, Flat |
| 19 | 136-5615 | 1 | Guide-Belt, Idler |
| 20 | 138-7228 | 1 | Spring-Extension |
| 21 | 117-7418-03 | 1 | Baffle-Cutoff |
| 22 | 1-603299 | 4 | Roller-Scalp, Anti |
| 23 | 138-7229 | 2 | Tube-Spanner |
| 24 | 98-5967 | 1 | Spacer-Wheel |
| 25 | 104-0892 | 2 | Spacer-Axle, Rear |
| 27 | 138-7231 | 1 | Pin-Chute |
| 28 | 138-7232 | 1 | Spring-Torsion |
| 29 | 126-4781-03 | 1 | Step-Deck |
| 30 | 114-1648-03 | 1 | Bracket-Deflector, Upper |
| 31 | 147-3015 | 1 | Deflector - Molded |

| Ref. | Part Number | Qty. | Description |
|---|---|---|---|
| 32 | 115-5048-03 | 1 | Plate-Deflector |
| 33 | 139-1702 | 1 | Bolt-Carriage |
| 34 | 7-4150 | 3 | Washer |
| 35 | 133-1166 | 1 | V-Belt |
| 36 | 147-2854 | 1 | Cover-Belt, LH |
| 37 | 147-2853 | 1 | Cover-Belt, RH |
| 38 | 120-7950 | 4 | Screw-Torx |
| 39 | 147-2872 | 2 | Stud-Ball |
| 40 | 115-7373 | 2 | Nut-Lock |
| 41 | 147-2871 | 2 | Grommet-Ball |
| 42 | 110-9981 | 3 | Washer-Plain |
| 43 | 3231-31 | 1 | Screw-CARR |
| 44 | 80-6990 | 3 | Washer-Hardened |
| 45 | 323-9 | 2 | Screw-HH |
| 46 | 119-4042 | 5 | Nut-HF, NI |
| 47 | 3230-22 | 2 | Screw-CARR |
| 48 | 119-4041 | 9 | Nut-HF |
| 49 | 323-23 | 2 | Screw-HH |
| 50 | 108-5388 | 1 | Screw-HH |
| 51 | 323-10 | 1 | Screw-HH |
| 52 | 139-2585 | 1 | Screw-HH |
| 53 | 3230-3 | 4 | Screw-CARR |
| 54 | 3256-68 | 2 | Washer-Flat |
| 55 | 3219-7 | 3 | Nut-Hex |
| 75 | 32144-4 | 4 | Screw-HWH |
| 79 | 99-7375 | 1 | Hose-Breather |
| 83 | 322-2 | 1 | Screw-HH |

# Deck Decal Assembly No. 147-8749

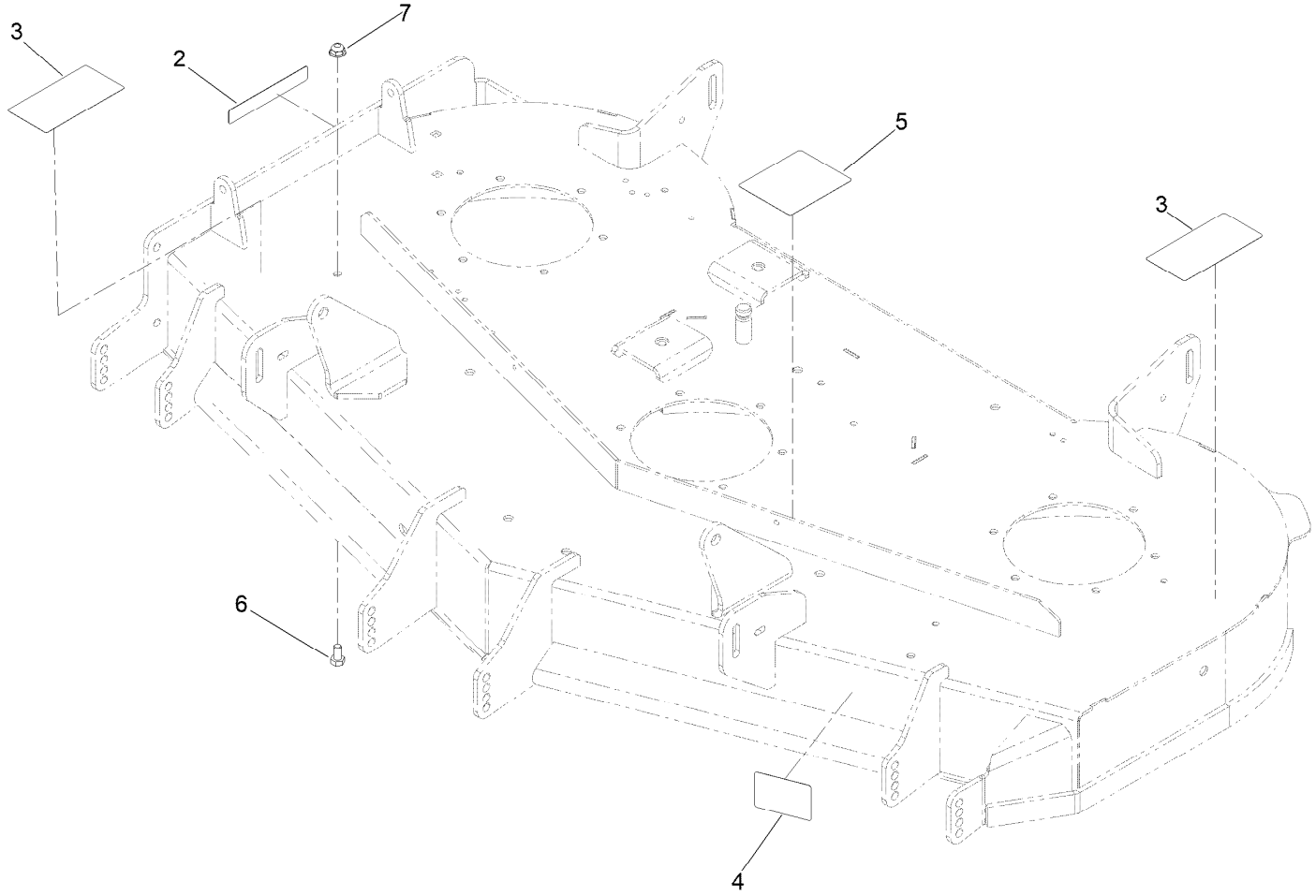

# Deck Decal Assembly No. 147-8749 (continued)

| Ref. | Part Number | Qty. | Description |
|---|---|---|---|
| 2 | 130-0731 | 1 | Decal-Danger |
| 3 | 132-0872 | 2 | Decal-Danger, Deck |
| 4 | 130-0765 | 1 | Decal-Scalp, Anti |
| 5 | 117-1194 | 1 | Decal-Routing, Belt |
| 6 | 139-2585 | 1 | Screw-HH |
| 7 | 119-4041 | 1 | Nut-HF |

# Arm Rest Assembly

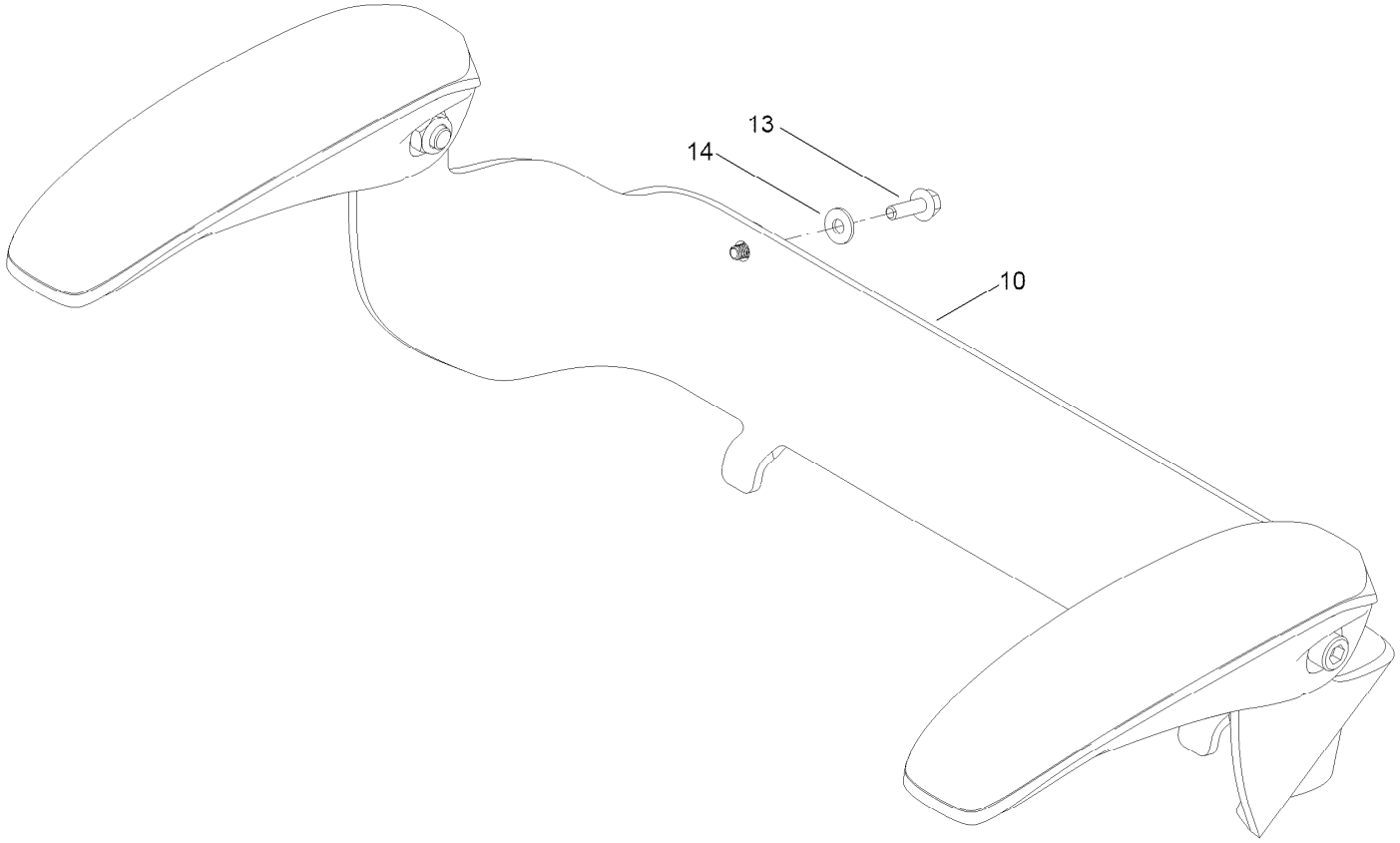

# Arm Rest Assembly (continued)

| Ref. | Part Number | Qty. | Description |
|---|---|---|---|
| 10 | 161-4567 | 1 | Kit-Arm Rest |
| 13 | 120-9641 | 2 | Screw-HHF |
| 14 | 119-8952 | 2 | Washer-Spcl |

# Seat Pan Assembly

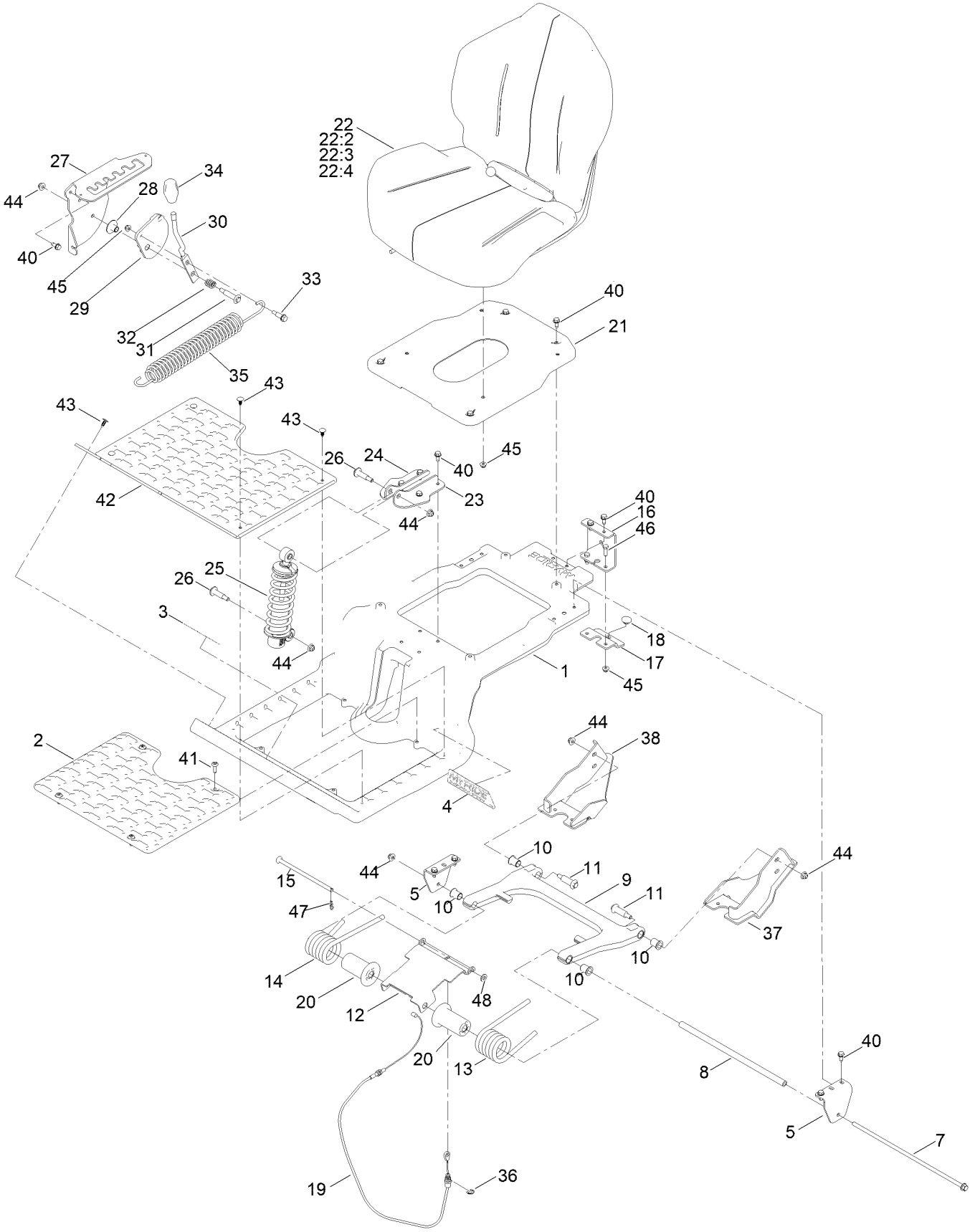

# Seat Pan Assembly (continued)

| Ref. | Part Number | Qty. | Description |
|---|---|---|---|
| 1 | 145-6394-05 | 1 | Platform, Myride |
| 2 | 145-6395-05 | 1 | Platform, Myride |
| 3 | 147-7662 | 1 | Decal - Myride |
| 4 | 147-7575 | 1 | Decal - Myride |
| 5 | 138-7517 | 2 | Bracket-Mount, Swing Arm |
| 7 | 138-7548 | 1 | Screw-HHF |
| 8 | 138-7549 | 1 | Tube-Spacer |
| 9 | 145-6312 | 1 | Arm-Swing |
| 10 | 138-2573 | 4 | Bushing-Flange |
| 11 | 138-2547 | 2 | Bolt-Shoulder |
| 12 | 138-7566-03 | 1 | Plate-Adjuster |
| 13 | 137-1983 | 1 | Spring-Torsion, LH |
| 14 | 137-7018 | 1 | Spring-Torsion, RH |
| 15 | 138-9813 | 1 | Rod-Adjustment |
| 16 | 138-9788 | 1 | Bracket-Cable |
| 17 | 139-2361-03 | 1 | Bracket Lower |
| 18 | 135-0505 | 1 | Bumper-Seat |
| 19 | 147-7713 | 1 | Cable-Adjustment, Myride |
| 20 | 138-9776 | 2 | Retainer-Spring |
| 21 | 147-7690-03 | 1 | Pan-Seat [black] |
| 22 | 163-6012 | 1 | Seat ASM - Milsco Cs180D |
| 22:2 | 161-4566 | 1 | Kit-Adjuster |
| 22:3 | 82-2190 | 1 | Switch-Bail |
| 22:4 | 163-6015 | 1 | Cover-Seat |
| 23 | 133-9318-03 | 1 | Bracket-Shock Mount, Upper (LH) |
| 24 | 133-9319-03 | 1 | Bracket-Shock Mount, Upper (RH) |
| 25 | 139-2427 | 1 | Shock/Spring ASM |
| 26 | 136-7198 | 2 | Bolt-Shoulder |
| 27 | 145-6309-01 | 1 | Bracket-Mr Gate |
| 28 | 139-5800 | 1 | Bushing - Flange |
| 29 | 147-5171 | 1 | Pulley-Cam |
| 30 | 147-5172 | 1 | Lever-Adjustment, Threaded |
| 31 | 92-1057 | 1 | Bolt-Shoulder |
| 32 | 139-5858 | 1 | Spring-Compression |
| 33 | 140-3759 | 1 | Bolt-Shoulder,HHF |
| 34 | 147-8715 | 1 | Knob-Mr |
| 35 | 138-9848 | 1 | Spring-Extension |
| 36 | 32120-47 | 1 | Ring-Retaining, External |
| 37 | 147-8721-03 | 1 | Mount-Mr Swing Arm, LH |
| 38 | 147-8722-03 | 1 | Mount-Mr Swing Arm, RH |
| 40 | 32144-70 | 17 | Screw-HWHTF |
| 41 | 147-7606 | 4 | Screw-Spcl |
| 42 | 147-7724 | 1 | Floor Mat |
| 43 | 117-2382 | 6 | Plug-Plastic |
| 44 | 119-4042 | 6 | Nut-HF, NI |
| 45 | 119-4041 | 7 | Nut-HF |
| 46 | 139-1716 | 2 | Screw-HH |
| 47 | 137-3083 | 1 | Pin-Hair |
| 48 | 115-1166 | 1 | Washer-Plain |

# Clutch Assembly

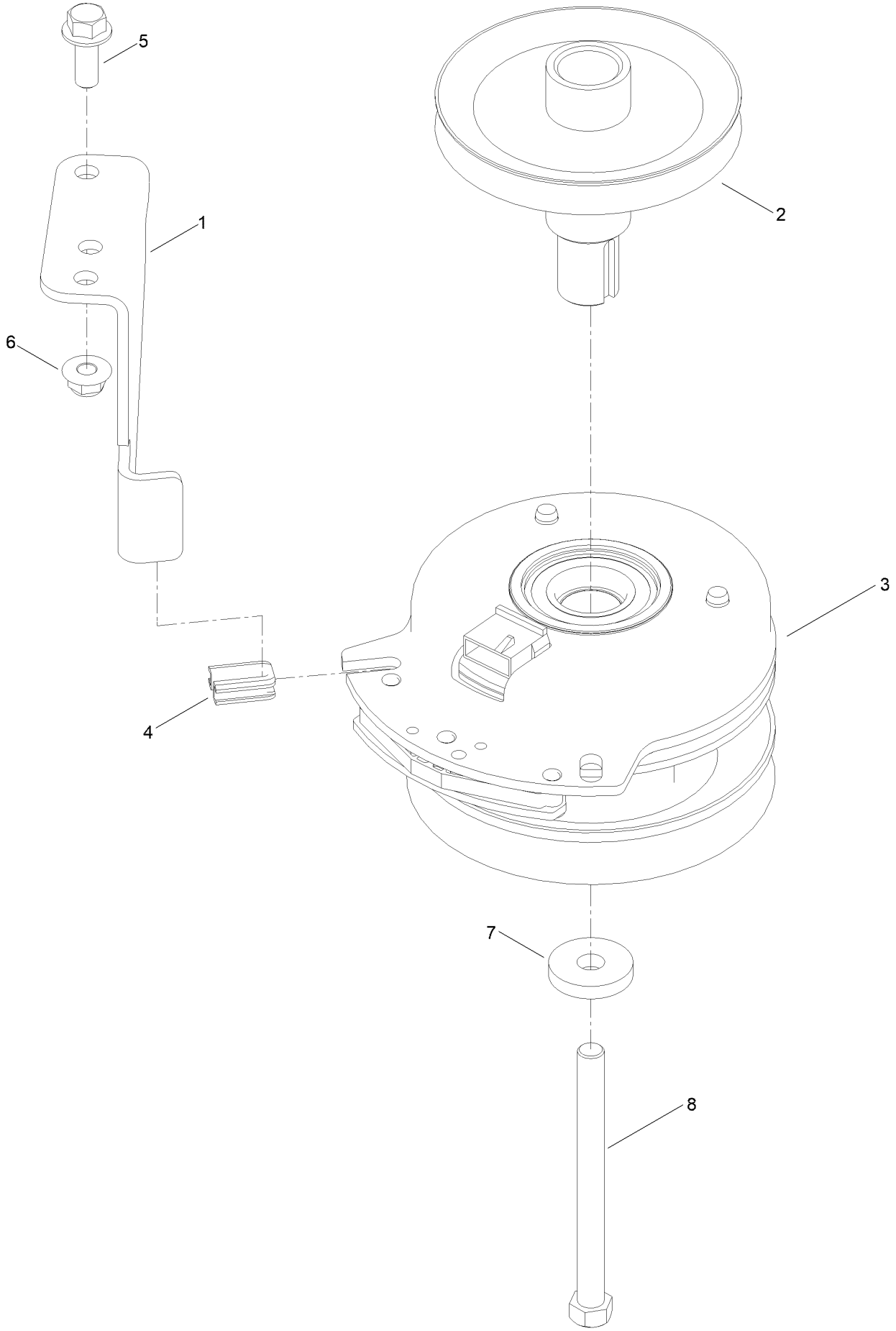

# Clutch Assembly (continued)

| Ref. | Part Number | Qty. | Description |
|---|---|---|---|
| 1 | 137-7000 | 1 | Stop-Clutch (Wide) |
| 2 | 138-9831 | 1 | Pulley-Engine |
| 3 | 127-3410 | 1 | Clutch-PTO |
| 4 | 120-2217 | 1 | Isolator-Clutch |
| 5 | 3234-42 | 1 | Screw-HHF |
| 6 | 119-4042 | 1 | Nut-HF, NI |
| 7 | 112843 | 1 | Washer |
| 8 | 3212-19 | 1 | Screw-HH |

# Attachments and Accessories

## For 76411 — Titan MYRide 48in Zero Turn Riding Mower

| Product Name | Model/Part |
|---|---|
| HYPR-OIL 500 (quart) | 114-4713 |
| Jack Kit | 127-6666 |
| Fuel Stabilizer .05 oz | 130-2393 |
| 4-Cycle Fuel, Snow And Lawn 32oz Can | 131-3823 |
| Toro Premium Fuel Treatment 12oz Bottle | 131-6572 |
| Oil-30/10W-30 Synthetic (Quart) | 138-6053 |
| HD Bagger Cover Kit | 140-5036 |
| Bagging Enhancement Kit 48in | 140-5121 |
| Hydro Service Kit | 144-5347 |
| Flat Free Caster Wheel Kit | 145-0489 |
| Led Light Kit | 147-8757 |
| Mount, Jack Titan | 147-8824 |
| 48in Mulch Kit | 148-1279 |
| 48/54/60 Striping Kit | 148-1367 |
| Assist Bar Kit | 161-4450 |
| Heavy Duty Spring Kit | 161-4525 |
| Kit-Arm Rest | 161-4567 |
| 10W30 4-Cycle Engine Oil (32oz Bottle) | 38280 |
| Toro 4-Cycle SAE 30 Oil (32oz Bottle) | 38903 |
| Toro Deluxe Rider Cover | 490-7319 |
| Powered Bagger, Titan Models ROHS | 79348 |
| ROPS Kit | 79487 |
| Slope Sensor Kit | 79489 |

**Notes:**

TORO®

Count on it.